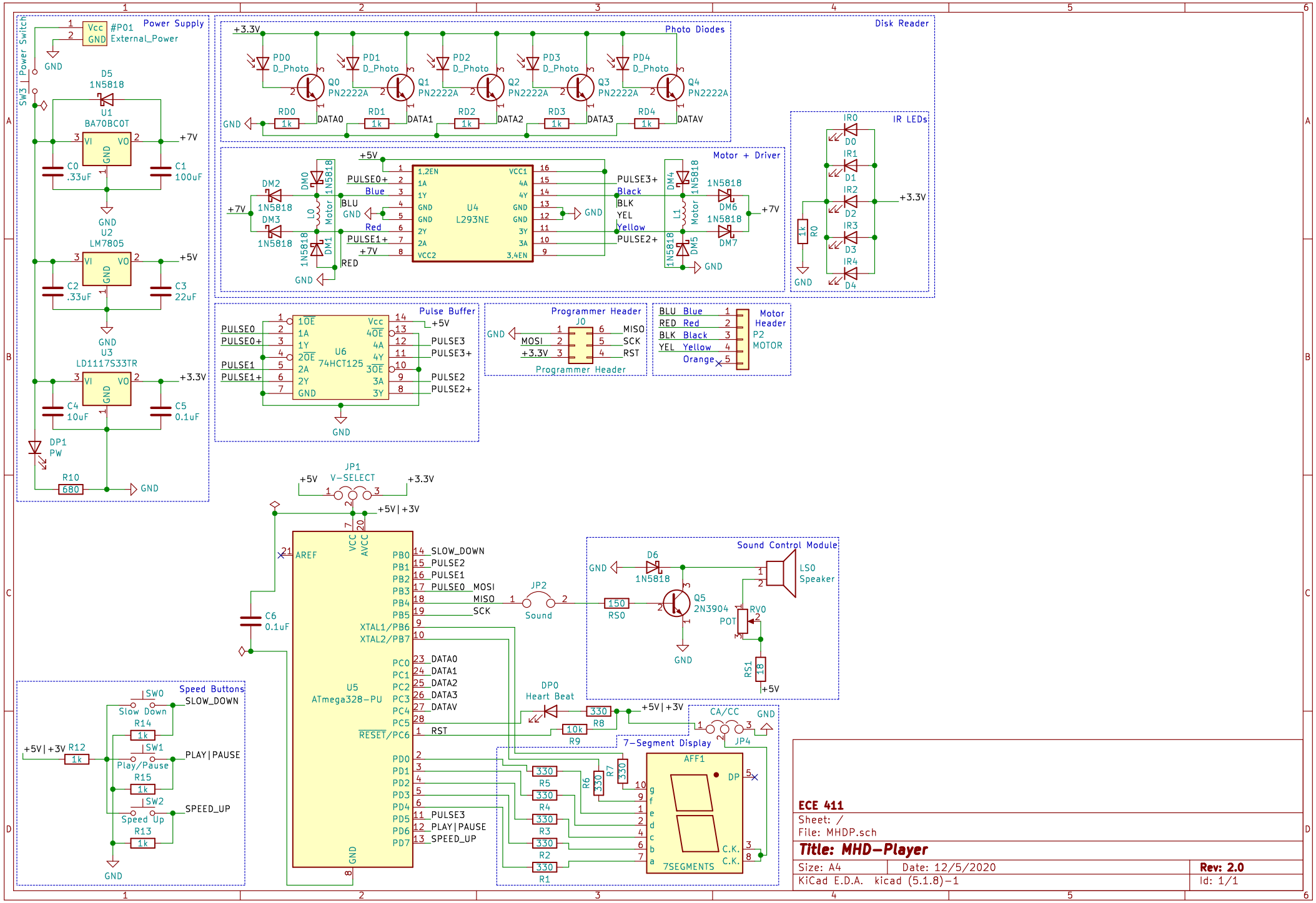
Power Supply
#P01
External_Power
Vcc
GND
SW3 | Power Switch
D5
1N5818
U1
BA70BC0T
VI
VO
GND
+7V
C0
.33uF
C1
100uF
U2
LM7805
+5V
C2
.33uF
C3
22uF
U3
LD1117S33TR
+3.3V
C4
10uF
C5
0.1uF
DP1
PW
R10
680
Disk Reader
Photo Diodes
+3.3V
PD0
D_Photo
PD1
PD2
PD3
PD4
Q0
PN2222A
Q1
Q2
Q3
Q4
RD0
RD1
RD2
RD3
RD4
1k
DATA0
DATA1
DATA2
DATA3
DATAV
Motor + Driver
+5V
U4
L293NE
1,2EN
1A
1Y
GND
2Y
2A
VCC2
VCC1
4A
4Y
3Y
3A
3,4EN
PULSE0+
Blue
BLU
Red
RED
PULSE1+
PULSE3+
Black
BLK
YEL
Yellow
PULSE2+
DM0
DM1
DM2
DM3
DM4
DM5
DM6
DM7
1N5818
L0
L1
Motor
+7V
IR LEDs
IR0
IR1
IR2
IR3
IR4
D0
D1
D2
D3
D4
R0
Pulse Buffer
U6
74HCT125
1OE
1A
1Y
2OE
2A
2Y
Vcc
4OE
4A
4Y
3OE
3A
3Y
PULSE0
PULSE1
PULSE3
PULSE2
Programmer Header
J0
MOSI
SCK
MISO
RST
Motor Header
P2
MOTOR
BLU Blue
RED Red
BLK Black
YEL Yellow
Orange
JP1
V-SELECT
+5V|+3V
U5
ATmega328-PU
AREF
VCC
AVCC
PB0
PB1
PB2
PB3
PB4
PB5
XTAL1/PB6
XTAL2/PB7
PC0
PC1
PC2
PC3
PC4
PC5
RESET/PC6
PD0
PD1
PD2
PD3
PD4
PD5
PD6
PD7
SLOW_DOWN
PULSE2
PULSE1
PULSE0
DATA0
DATA1
DATA2
DATA3
DATAV
RST
PULSE3
PULSE3+
PULSE2
PULSE2+
C6
0.1uF
JP2
Sound
Sound Control Module
D6
Q5
2N3904
150
RS0
RV0
POT
RS1
18
LS0
Speaker
DP0
Heart Beat
330
R8
10k
R9
CA/CC
JP4
7-Segment Display
AFF1
R1
R2
R3
R4
R5
R6
R7
DP
C.K.
7SEGMENTS
Speed Buttons
SW0
Slow Down
SW1
Play/Pause
SW2
Speed Up
R12
R14
R15
R13
PLAY|PAUSE
SPEED_UP
ECE 411
Sheet: /
File: MHDP.sch
Title: MHD-Player
Size: A4
Date: 12/5/2020
Rev: 2.0
KiCad E.D.A. kicad (5.1.8)-1
Id: 1/1