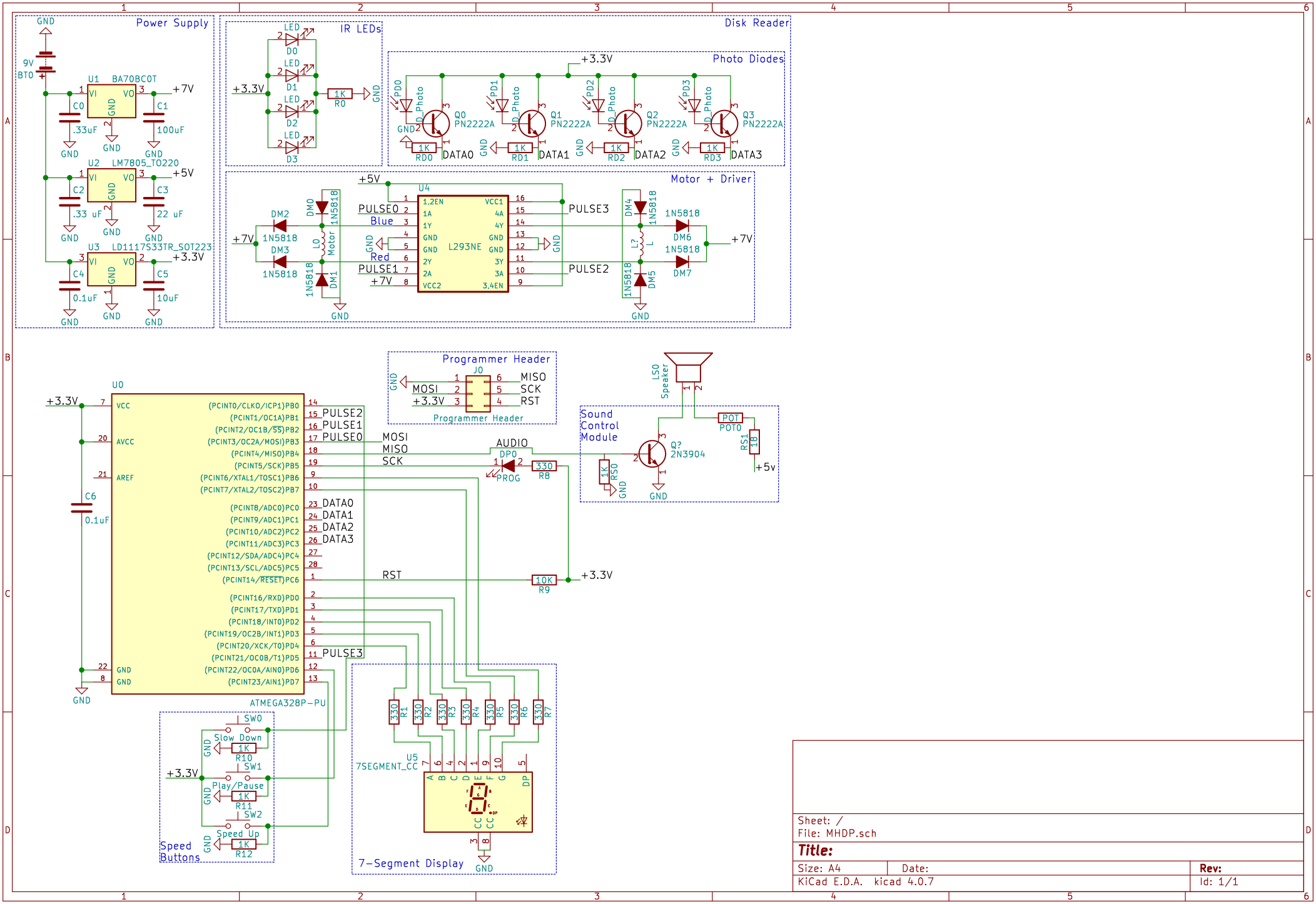
Power Supply
9V
BT0
U1 BA70BC0T
C0 .33uF
C1 100uF
+7V
U2 LM7805_TO220
C2 .33 uF
C3 22 uF
+5V
U3 LD1117S33TR_SOT223
C4 0.1uF
C5 10uF
+3.3V
GND
IR LEDs
D0
D1
D2
D3
R0 1K
Disk Reader
Photo Diodes
PD0
PD1
PD2
PD3
D_Photo
Q0 PN2222A
Q1 PN2222A
Q2 PN2222A
Q3 PN2222A
RD0 1K
RD1 1K
RD2 1K
RD3 1K
DATA0
DATA1
DATA2
DATA3
Motor + Driver
U4
L293NE
PULSE0
PULSE1
PULSE2
PULSE3
Blue
Red
DM0
DM1
DM2
DM3
DM4
DM5
DM6
DM7
1N5818
L0 Motor
L? L
U0
ATMEGA328P-PU
VCC
AVCC
AREF
C6 0.1uF
(PCINT0/CLKO/ICP1)PB0
(PCINT1/OC1A)PB1
(PCINT2/OC1B/SS)PB2
(PCINT3/OC2A/MOSI)PB3
(PCINT4/MISO)PB4
(PCINT5/SCK)PB5
(PCINT6/XTAL1/TOSC1)PB6
(PCINT7/XTAL2/TOSC2)PB7
(PCINT8/ADC0)PC0
(PCINT9/ADC1)PC1
(PCINT10/ADC2)PC2
(PCINT11/ADC3)PC3
(PCINT12/SDA/ADC4)PC4
(PCINT13/SCL/ADC5)PC5
(PCINT14/RESET)PC6
(PCINT16/RXD)PD0
(PCINT17/TXD)PD1
(PCINT18/INT0)PD2
(PCINT19/OC2B/INT1)PD3
(PCINT20/XCK/T0)PD4
(PCINT21/OC0B/T1)PD5
(PCINT22/OC0A/AIN0)PD6
(PCINT23/AIN1)PD7
MOSI
MISO
SCK
RST
AUDIO
DP0
PROG
R8 330
R9 10K
Programmer Header
J0
MISO
SCK
RST
MOSI
Sound Control Module
LS0 Speaker
POT POT0
RS1 18
Q? 2N3904
RS0 1K
+5v
Speed Buttons
SW0 Slow Down
R10 1K
SW1 Play/Pause
R11 1K
SW2 Speed Up
R12 1K
7-Segment Display
U5 7SEGMENT_CC
R1 330
R2 330
R3 330
R4 330
R5 330
R6 330
R7 330
Sheet: /
File: MHDP.sch
Title:
Size: A4
Date:
Rev:
KiCad E.D.A. kicad 4.0.7
Id: 1/1