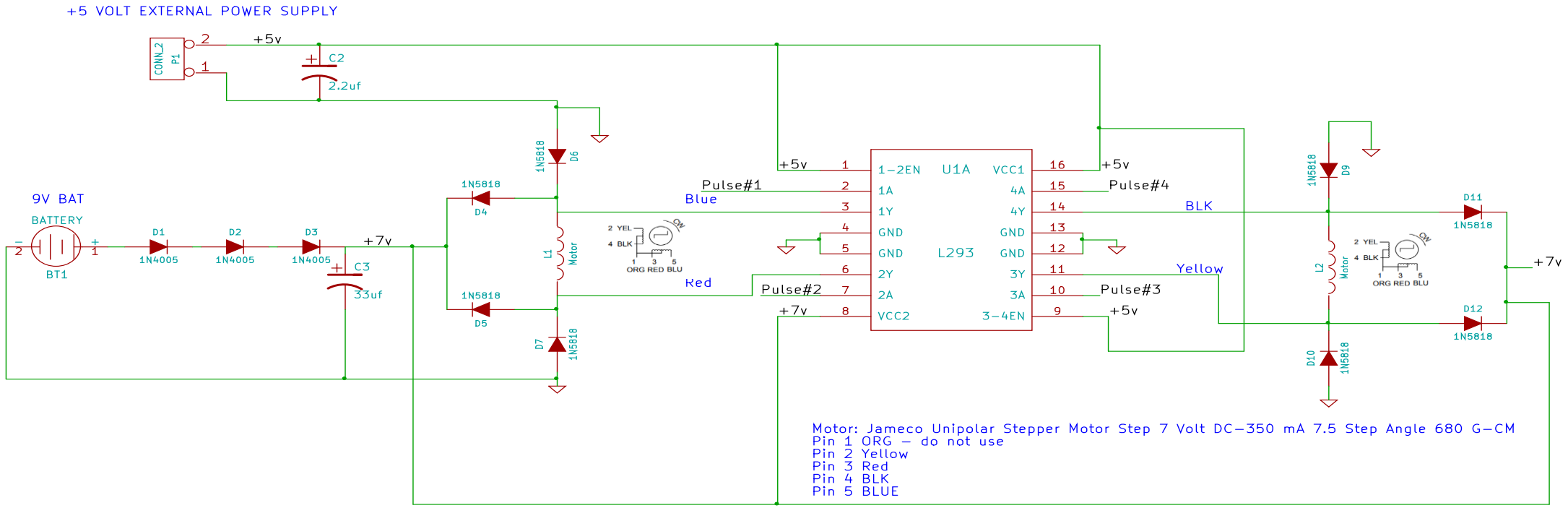

ATMega328-PU Microcontroller DIP-28
Jameco Part no.: 2139111

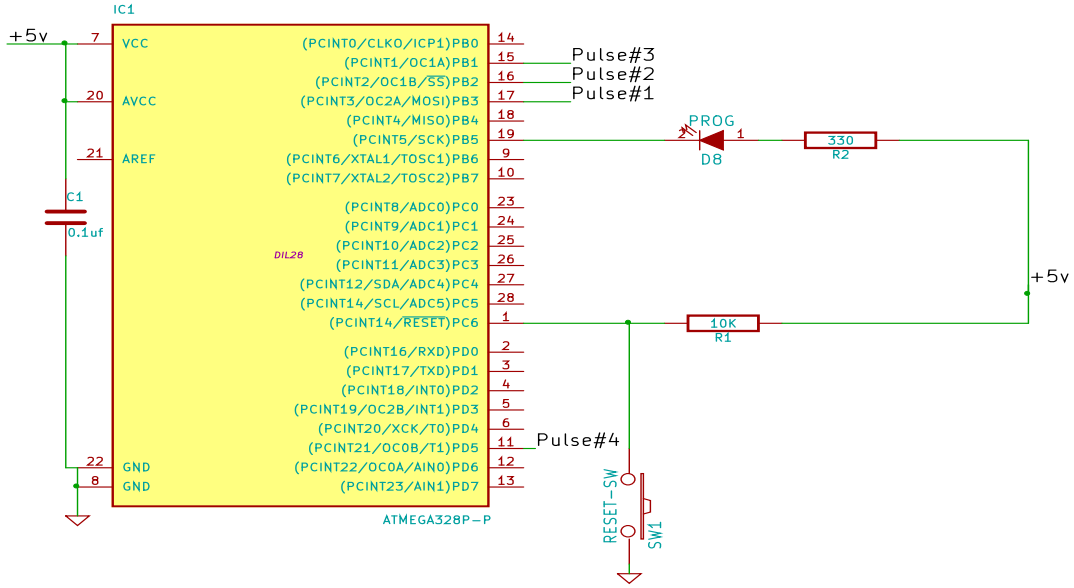

Atmega168 Pin Mapping

Arduino function				Arduino function
reset	(PCINT14/RESET) PC6	1	28	PC5 (ADC5/SCL/PCINT13) analog input 5
digital pin 0 (RX)	(PCINT16/RXD) PD0	2	27	PC4 (ADC4/SDA/PCINT12) analog input 4
digital pin 1 (TX)	(PCINT17/TXD) PD1	3	26	PC3 (ADC3/PCINT11) analog input 3
digital pin 2	(PCINT18/INT0) PD2	4	25	PC2 (ADC2/PCINT10) analog input 2
digital pin 3 (PWM)	(PCINT19/OC2B/INT1) PD3	5	24	PC1 (ADC1/PCINT9) analog input 1
digital pin 4	(PCINT20/XCK/T0) PD4	6	23	PC0 (ADC0/PCINT8) analog input 0
VCC	VCC	7	22	GND GND
GND	GND	8	21	AREF analog reference
crystal	(PCINT6/XTAL1/TOSC1) PB6	9	20	AVCC VCC
crystal	(PCINT7/XTAL2/TOSC2) PB7	10	19	PB5 (SCK/PCINT5) digital pin 13
digital pin 5 (PWM)	(PCINT21/OC0B/T1) PD5	11	18	PB4 (MISO/PCINT4) digital pin 12
digital pin 6 (PWM)	(PCINT22/OC0A/AIN0) PD6	12	17	PB3 (MOSI/OC2A/PCINT3) digital pin 11(PWM)
digital pin 7	(PCINT23/AIN1) PD7	13	16	PB2 (SS/OC1B/PCINT2) digital pin 10 (PWM)
digital pin 8	(PCINT0/CLKO/ICP1) PB0	14	15	PB1 (OC1A/PCINT1) digital pin 9 (PWM)

Digital Pins 11,12 & 13 are used by the ICSP header for MOSI, MISO, SCK connections (Atmega168 pins 17,18 & 19). Avoid low-impedance loads on these pins when using the ICSP header.

File: L293-motor-circuit.sch		
Sheet: /		
Title: Hector Soto School Project		
Size: A4	Date: 29 oct 2020	**Rev: 1.0**
KiCad E.D.A. eeschema (2013-07-07 BZR 4022)-stable		Id: 1/1