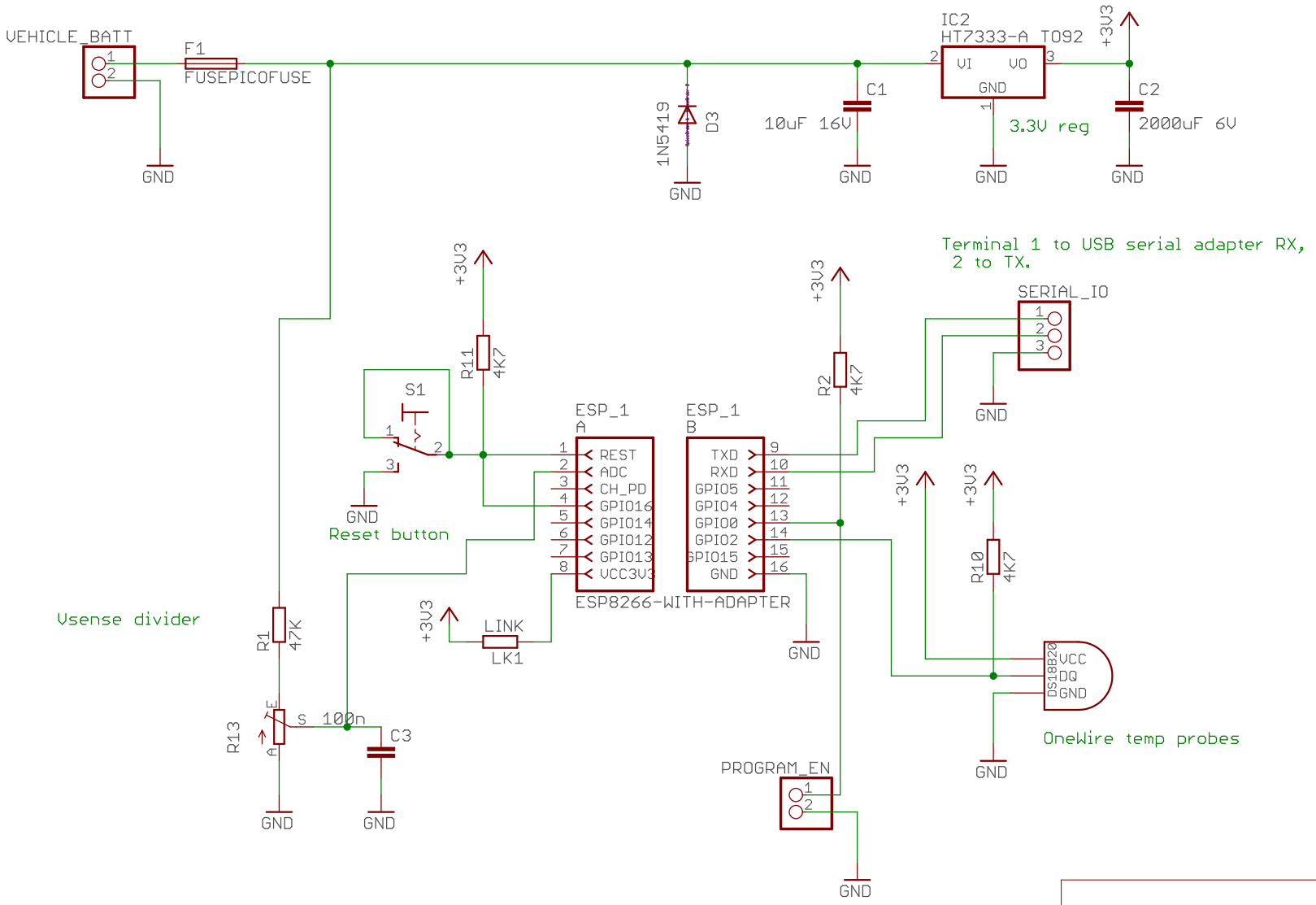

10uF 10V on ESP8266 adapter
Pin3 has 10K Pull-Up on adapter.
Pin15 has 10K Pull-Down on adapter.

TITLE: ESP8266_battery_monitor	
Document Number:	REV:
Date: 04-Oct-16 11:49 PM	Sheet: 1/1