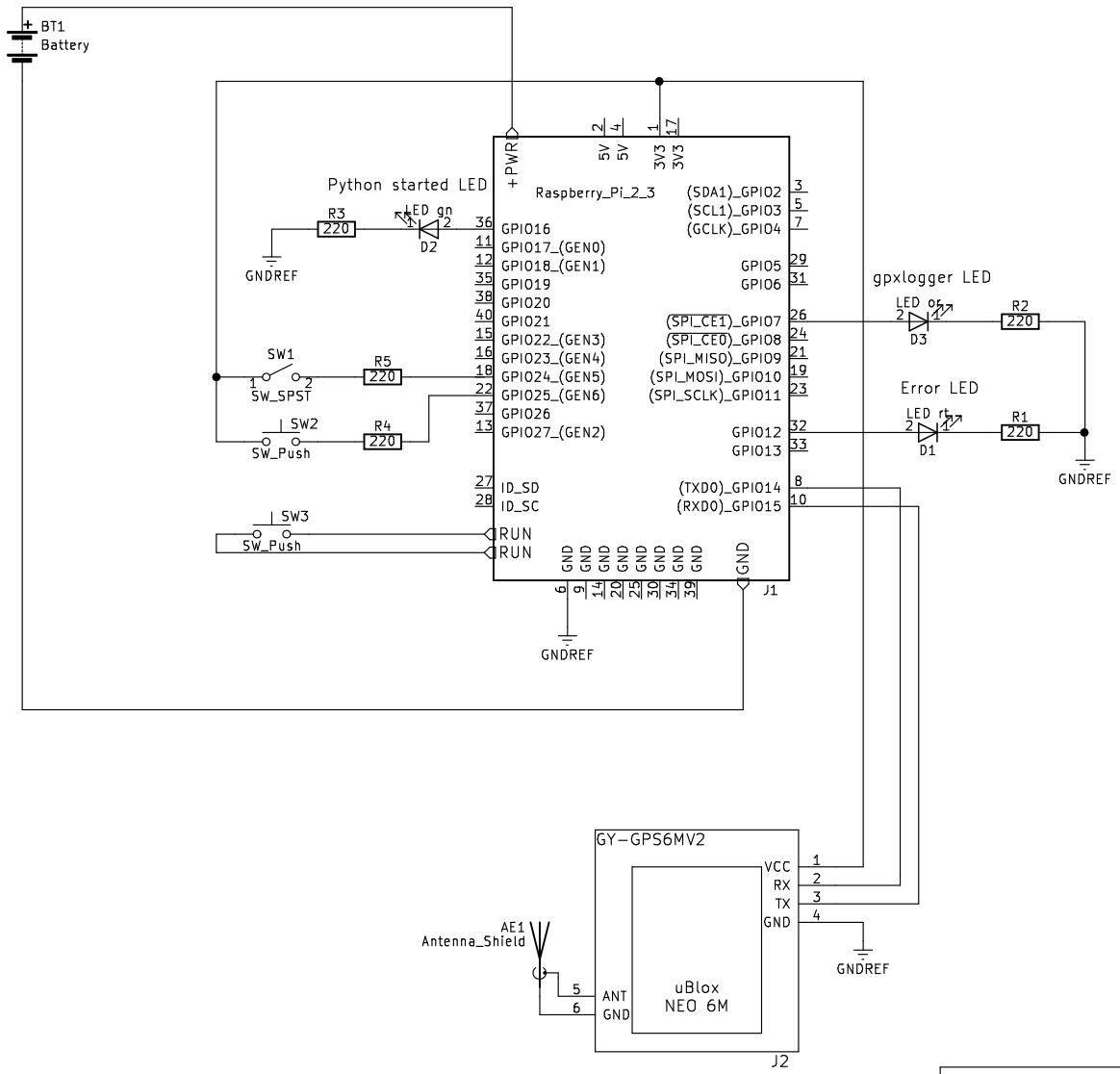

Sheet: /
File: RaspiGPSlogger.sch

Title: Raspi GPS Logger

Size: A4	Date:	Rev:
KiCad E.D.A. kicad 4.0.7-e2-637658ubuntu16.04.1		Id: 1/1