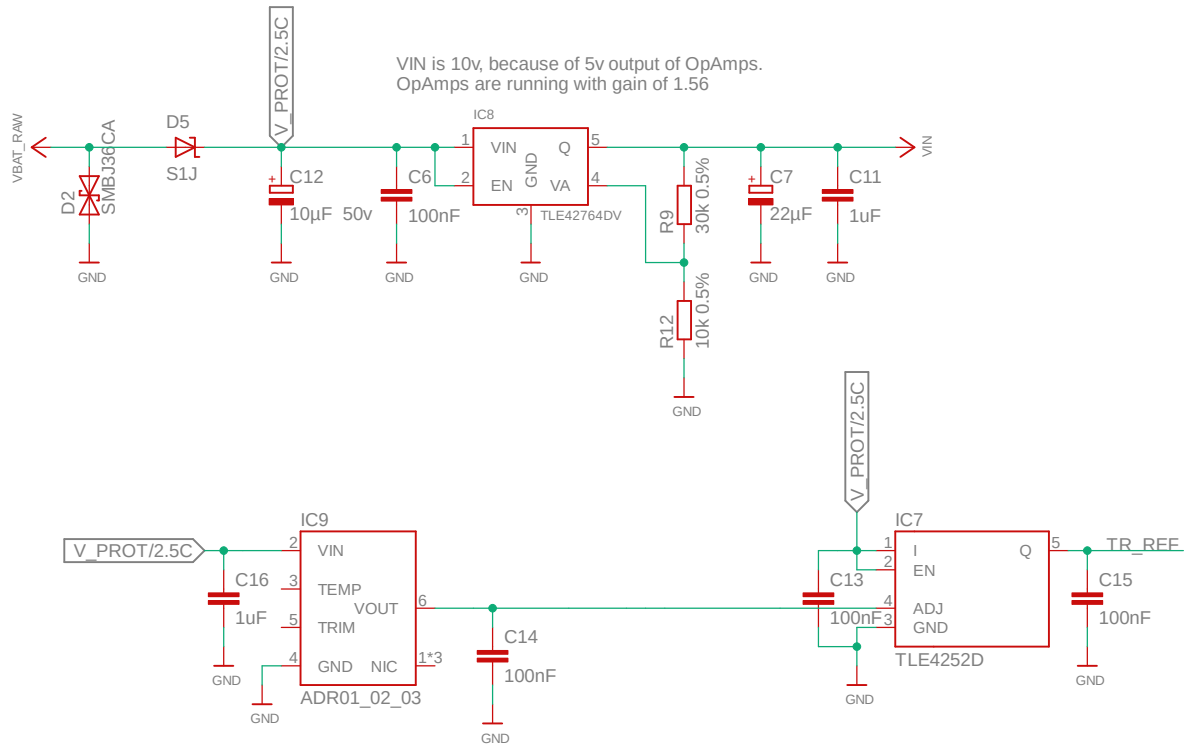


| | | |
|---|---|---|
| hfm_adapter_nucleo-32 | Name: | Power |
| 25.07.2024 10:03 | Sheet: | 4/5 |
| | www.bmw-rudel.de | |