ATmega4808-AU

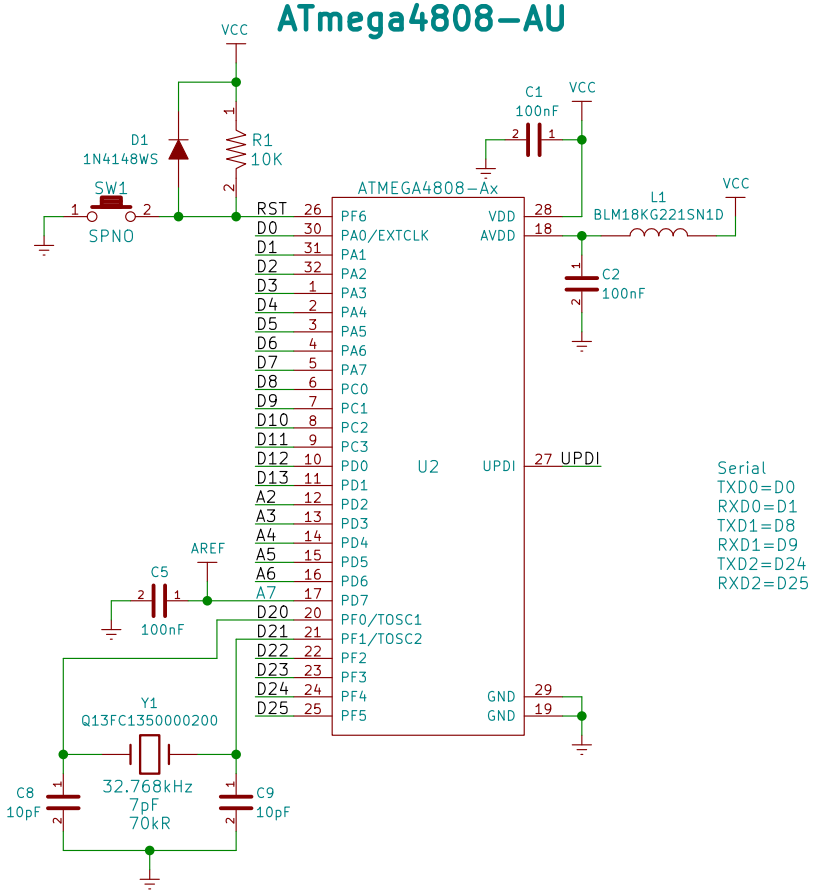

Serial
TXD0=D0
RXD0=D1
TXD1=D8
RXD1=D9
TXD2=D24
RXD2=D25

Power Management

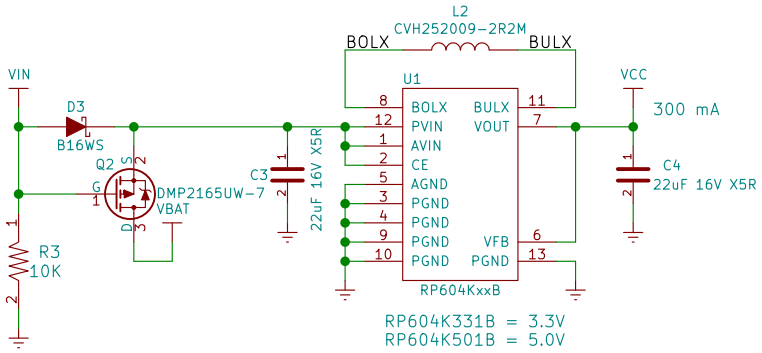

Battery Monitor

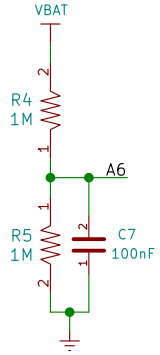

Logos

Notes

1. All resistor are rated 1% 0.0625W unless specified.
2. All capacitor are rated 50V X7R unless specified.

Pin Breakout

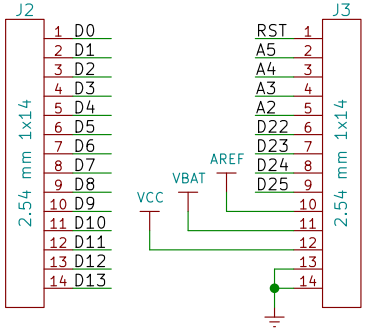

FTDI & UPDI Header

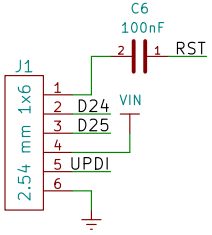

LED

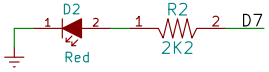

Title: Mini Ultra	
Rev: 1V00	
Rocket Scream Electronics	
Date: 2020-06-13	
File: MINI-ULTRA.sch	
Size: A4	
KiCad E.D.A. kicad 5.1.6-c6e7f7d87ubuntu18.04.1	Id: 1/1