Update regarding the Signal Conditioning Circuit

Result:

- The signal was filtered using Second Order bandpass filter with uppercut-off frequency 0.49kHz and lower cut-off frequency 1Hz.
- Then the signal was passed through Stage-I amplifier with gain equal to 10. Then the signal was fed to voltage shifter to avoid negative voltage.
- Then the signal was passed through Stage –II amplifier with gain equal to 4.7. The signal is adjusted to be compactible to ESP8266.
- Now, the signal will be given to the Signal processing Circuit for the calculation of the respiration rate.
- The Signal processing Circuit is ESP8266 WIFI module.
- A threshold voltage will be assigned to the module and respiration rate is calculated. If the respiration rate crosses the limit 12-16 breaths/sec then warning message will be sent to WhatsApp through ESP8266 WIFI Module.

Circuit Diagram for GOP based sensor for non-invasive measurement of respiration rate

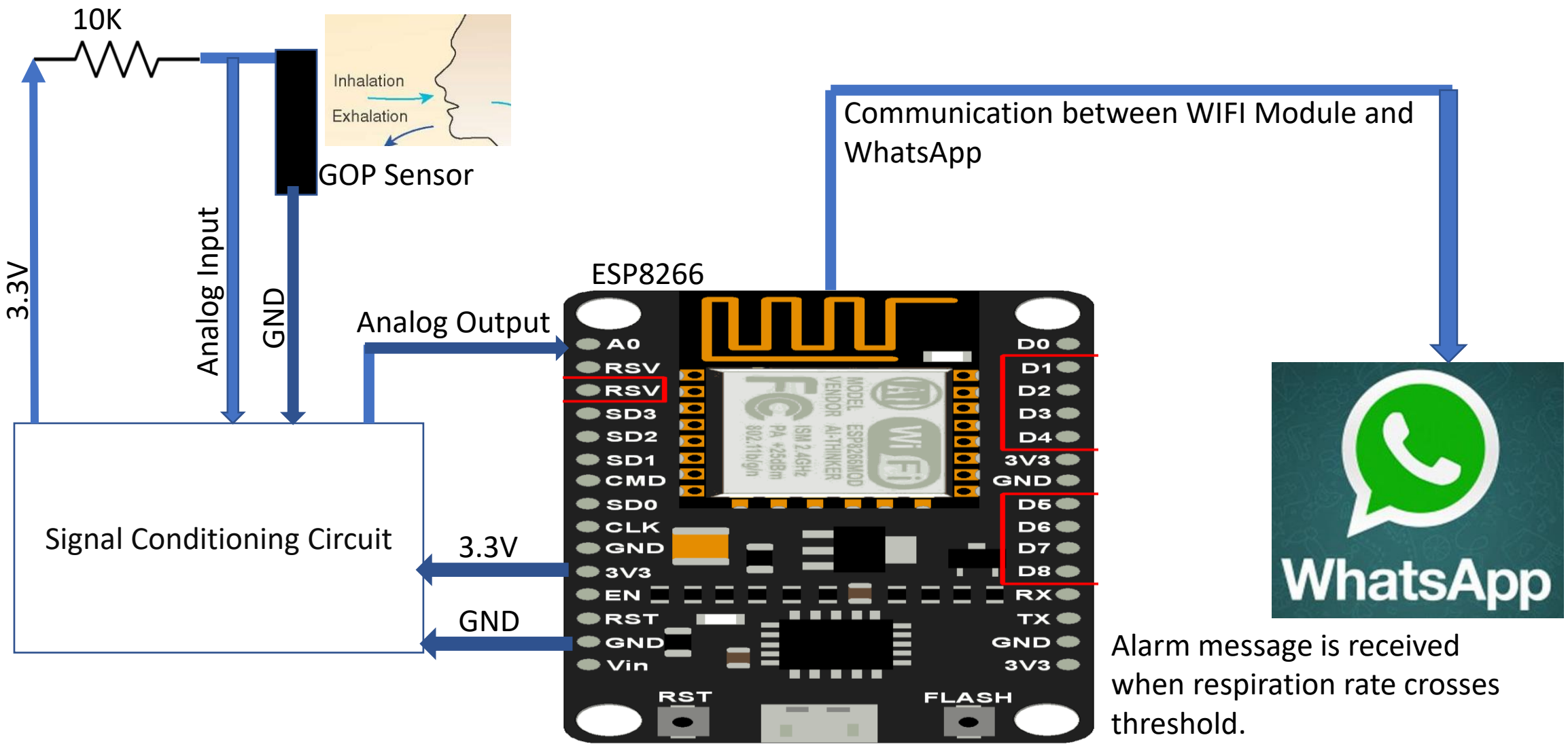

Schematic of Signal Conditioning Circuit(MATLAB-Simulink)

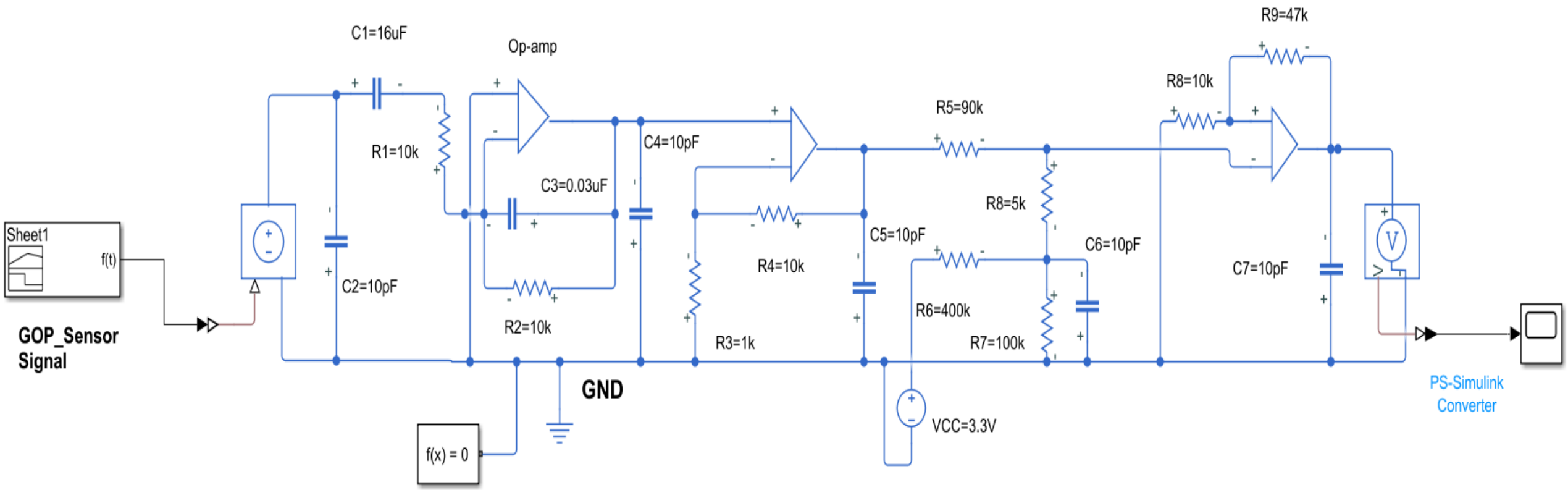

Second-Order Bandpass Filter || **Stage-I Amplification** || **Voltage Shifter Circuit** || **Stage-II Amplification**

STEP-I || **STEP-II** || **STEP-III** || **STEP-IV**

Plot shows the Signal from the GOP based sensor which is fed to Signal Conditioning Circuit.

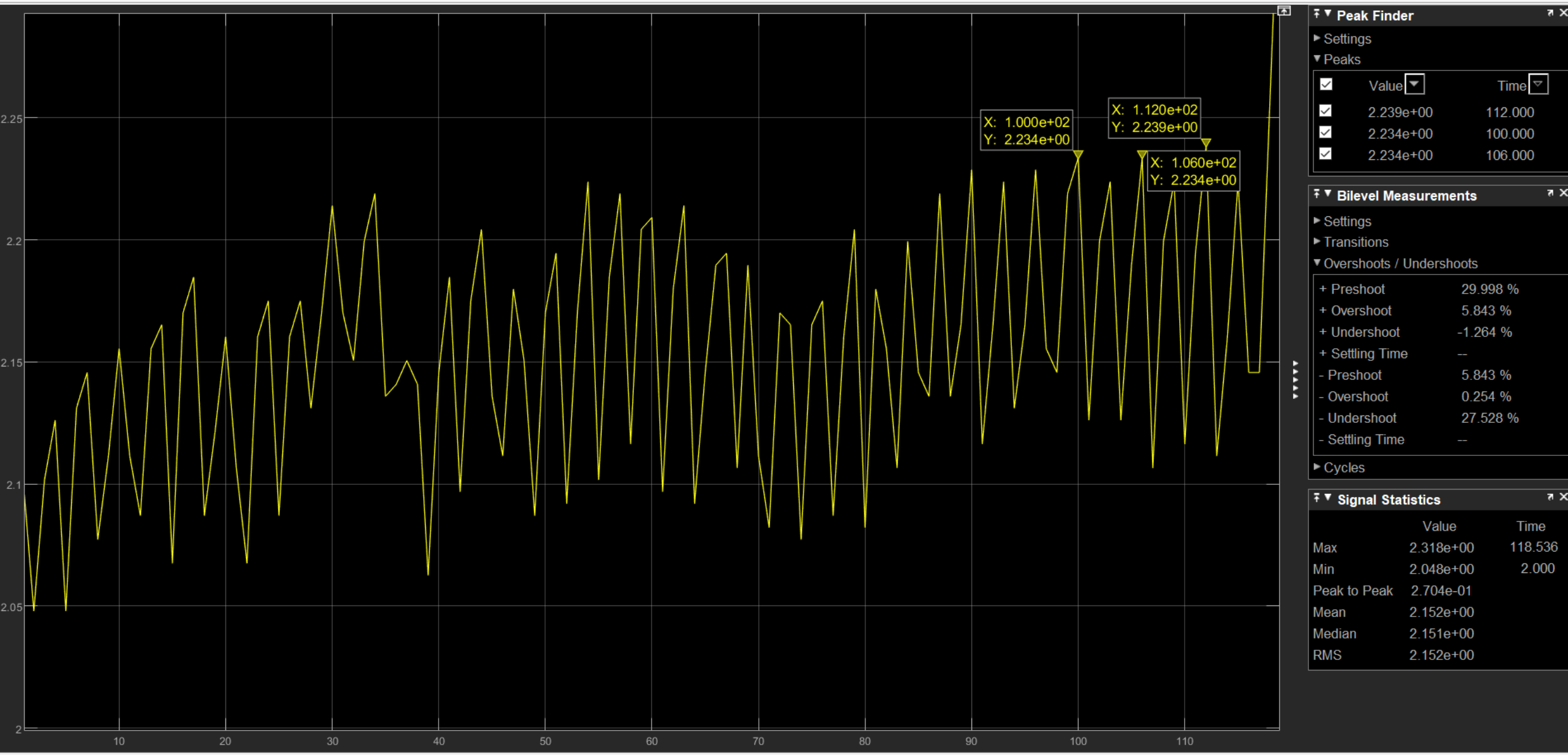

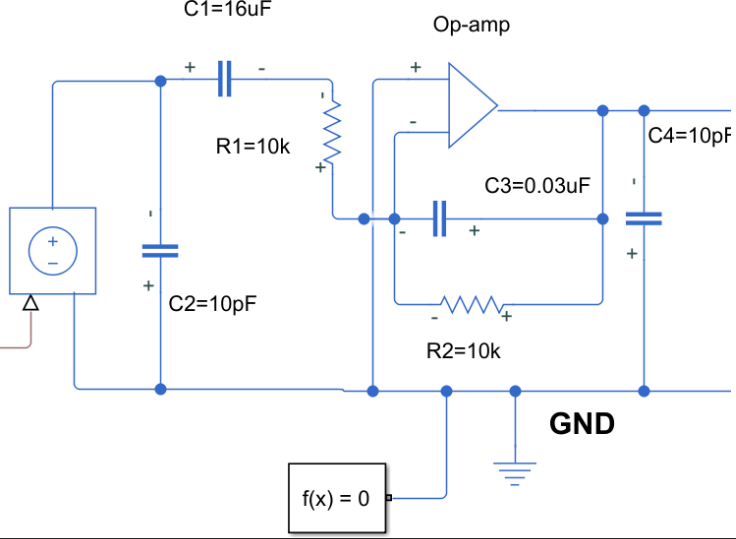

The schematic shows the Second order bandpass filter. The signal is filtered and required sensor signal is obtained. The signal is millivolt signal. The signal should to amplified .

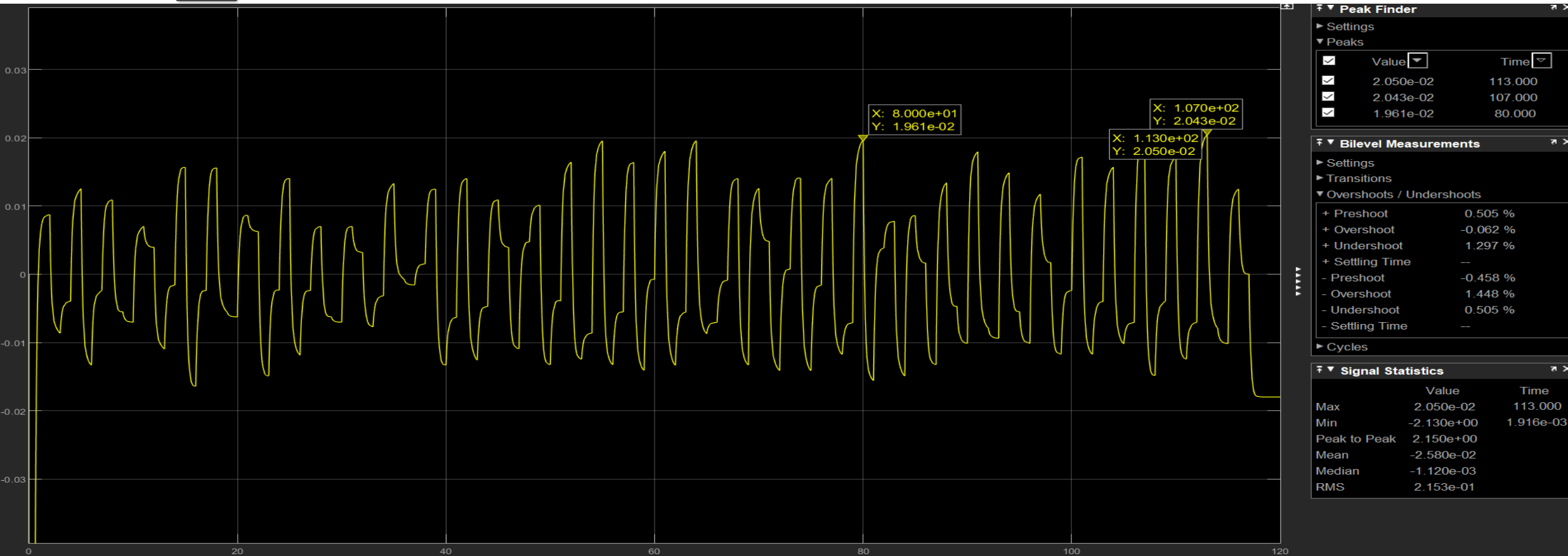

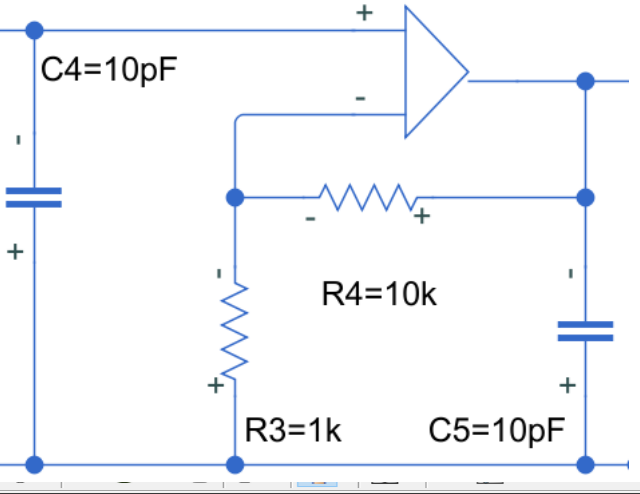

The Schematic shows the Stage-I Amplifier with gain equal to 10.The graph shows the amplified signal. But due to amplification the signal is having negative values which is not compactible for ESp8266.To eliminate this issue we must shift the signal.

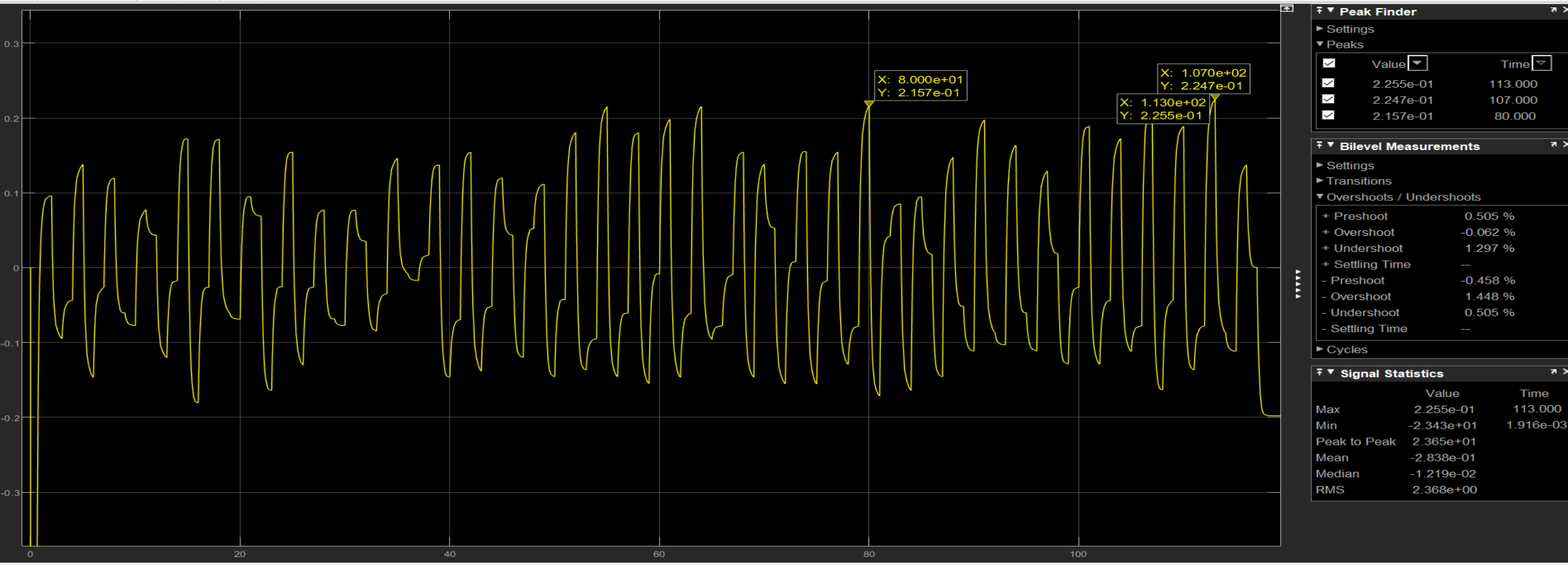

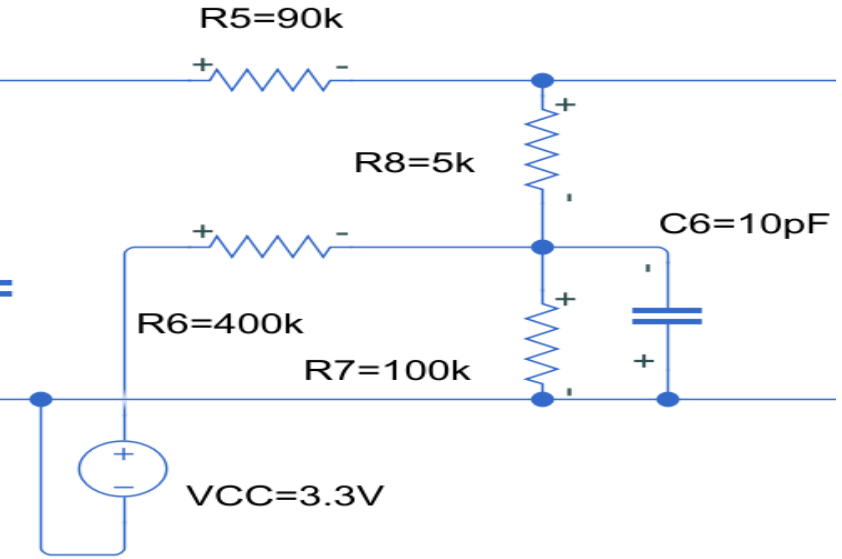

The circuit shows the Voltage shifting Circuit. The Circuit eliminates the negative part of the signal. The graph resembles the signal after the process.

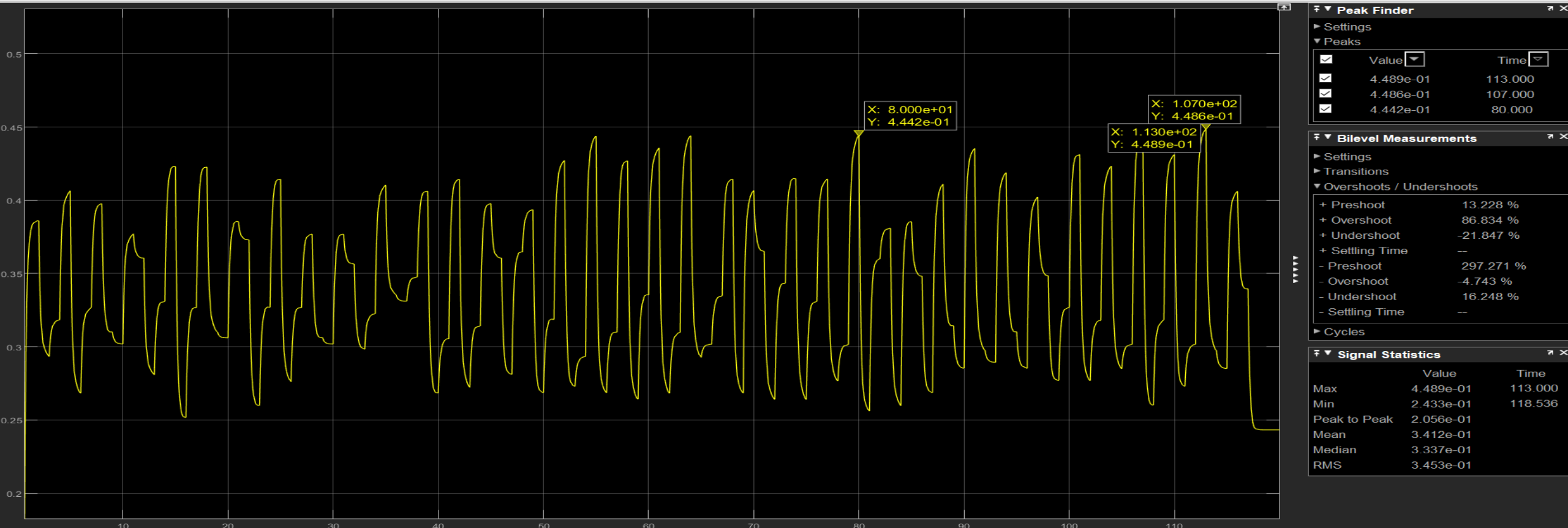

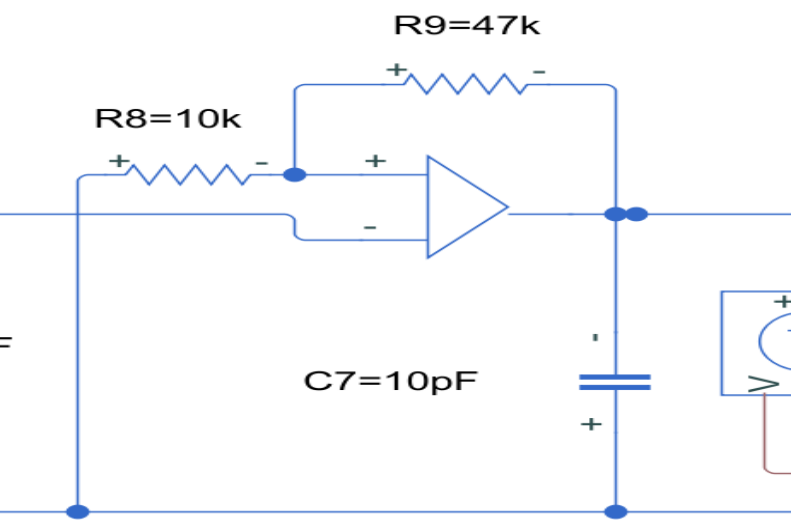

This is the Stage-II Amplification. The signal is amplified with gain 4.7.To make it compactible to ESP8266 which has a voltage range of 0V-3.3V.Now, the signal is ready for processing.
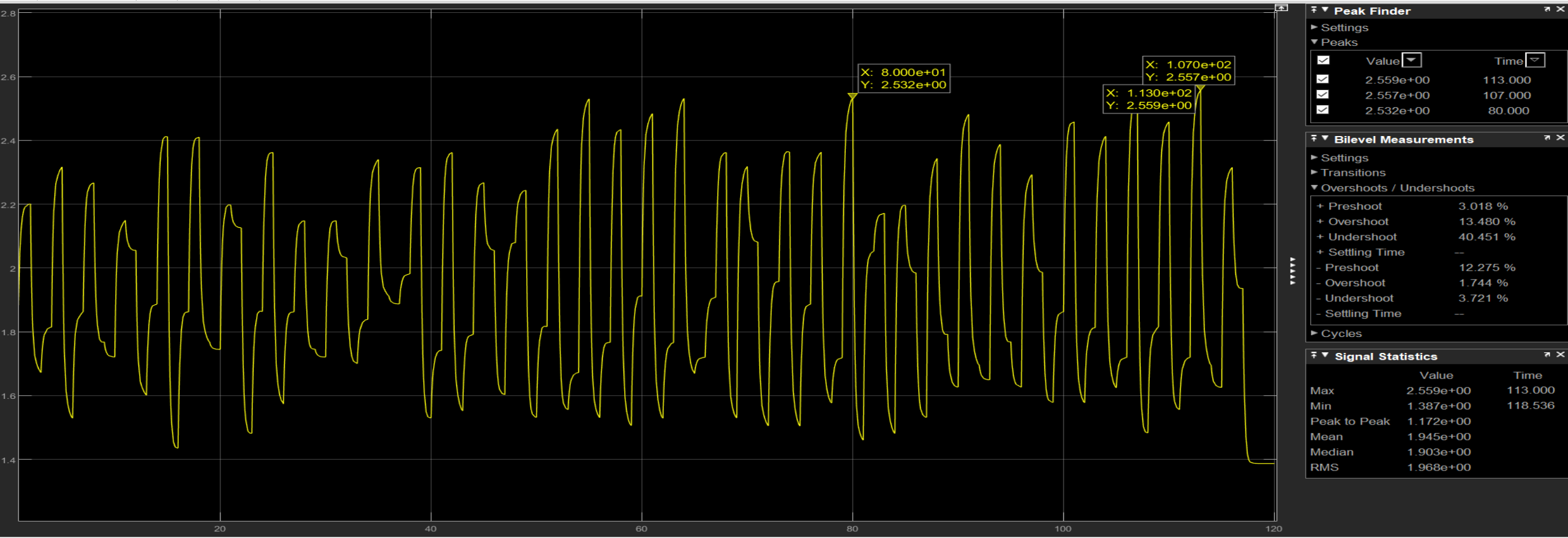
- The threshold will be set as 2V and the respiration rate will be found.