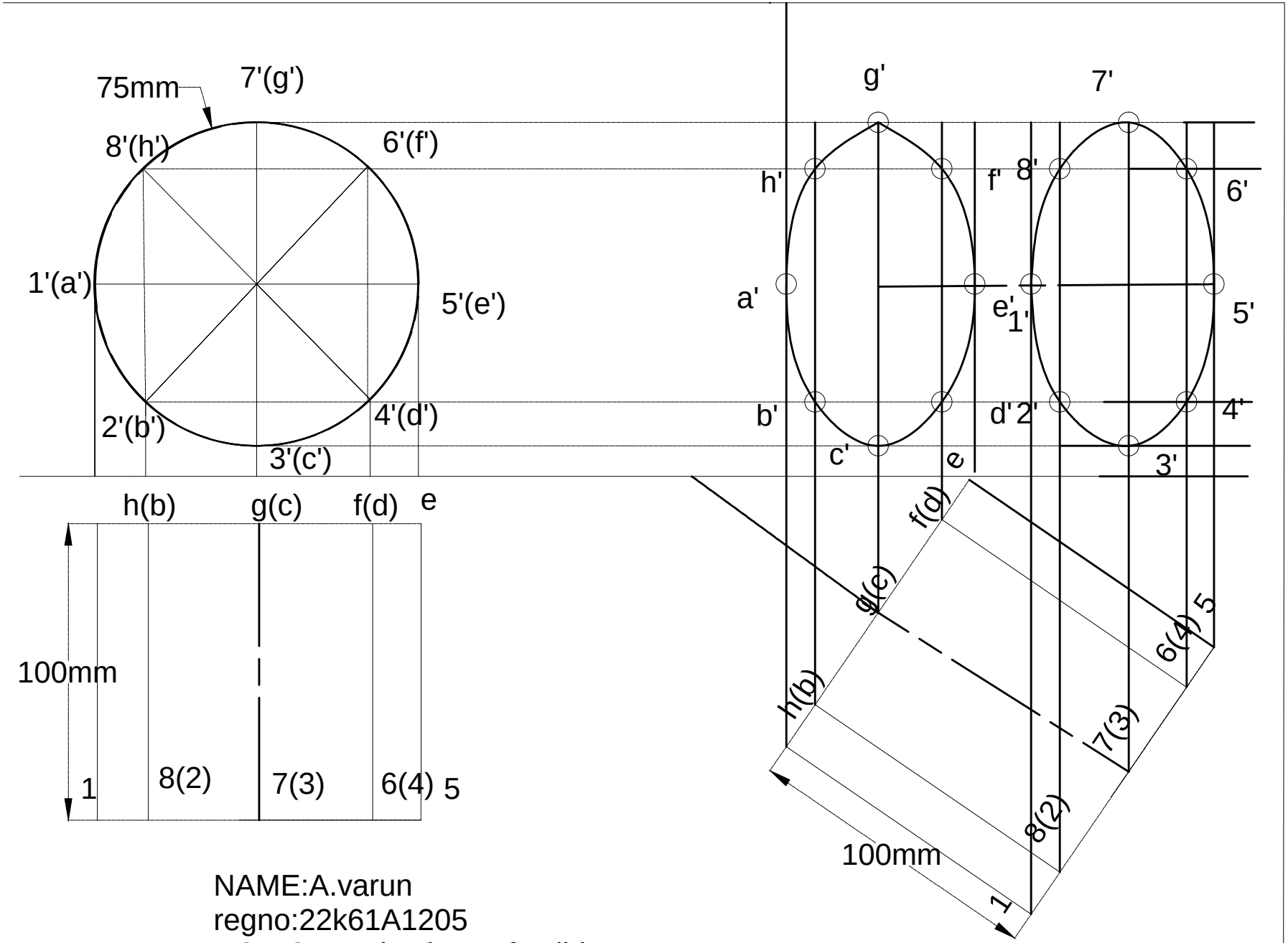

NAME:A.varun
regno:22k61A1205
TOPIC : Projections of solids