Operando Profiling of Industrial Catalysts by simultaneous powder X-ray diffraction tomography with intrapellet species concentration and temperature profile

H. Appala[1],K. Ishakova[2],B. Sosna[4],O. Gutowski[2],T.L. Sheppard[3],O. Korup[1,4], and R. Horn[1,4]

[1]Hamburg University of Technology, 21073 Hamburg, Germany

[2]Deutsches Elektronen-Synchrotron DESY, 22607 Hamburg, Germany

[3]Karlsruhe Institute of Technology, 76131 Karlsruhe, Germany

[4]Reacnostics GmbH, 20457 Hamburg, Germany

Introduction

On technical and industrial scale, catalytic fixed-bed reactors are the “workhorses” of the chemical industry for production of chemicals and fuels. In random catalyst packing of a reactor, each pellet is exposed to different boundary conditions, due to different orientation in the gas flow as well as concentration and temperature gradients across the catalyst bed. To determine the rather complex structure-activity relations which exist in heterogeneous catalysis, operando methodology has become indispensable. This requires structural probing of the catalyst under chemically relevant reaction conditions, combined with simultaneous measurement of catalyst performance (e.g. conversion). Operando studies are now commonly applied with synchrotron radiation to small sample geometries, typically less than 1.5 mm diameter reactors, which often restricts catalytic activity measurements to end of pipe measurements [1]. Operando X-ray powder diffraction computed tomography (XRDCT) enables detailed insight into the structure of catalysts and other functional materials. Here we introduce a new generation of operando XRD-CT reactor with a defined flow field and ability to measure intrapellet concentration and temperature profiles in a single catalyst pellet at industrially relevant conditions.

Materials and Methods

The setup is considered as novel reactor combining the concepts from single pellet probing approach by Sosna et al. [1] and with a setup developed by Becher et al. [2] who used XRD-CT to observe the heterogeneous distribution of active metal on catalytic support. In addition to combining the two concepts, the new setup, depicted in Figure 1, offers significant enhancements such as the ability to conduct studies

atpressures of up to 10 bars and 600°C with a high flow rate of up to 10 LN/min and also provides 3D spatially-resolved structural information of catalysts in operation. Simultaneously, ex-situ analysis was performed on aged catalysts. The oxidative dehydrogenation of ethane (ODHE) over a $MoO_3/\gamma\text{-}Al_2O_3$ catalyst was used as a test system and the pellets were aged at various conditions before performing XRD-CT.

Results and Discussion

In this contribution, ex-situ XRD-CT results are reported. The purpose of these tests was to evaluate the suitability of XRD-CT to characterize catalysts at work. In the case of ODH, XRD-CT revealed a distinct phase change from MoO_3 to MoO_2 in a single pellet as function of the declining oxygen partial pressure inside the pellet as shown in Figure 2a which is inline with results from Wollak et al [3]. In addition, the distribution of active metal was not uniform throughout the pellet as shown in Figure 2b and currently research is being conducted and the intial results are encouraging.

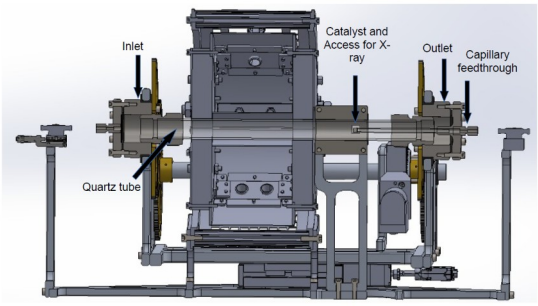

Figure 1. Cross section of high performance tomogrpahy reactor for a single pellet

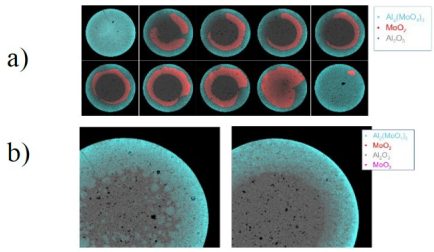

Figure 2.a.Crystalline phase distribution of an aged pellet after ODHE. b. Difference in distribution of active metal

Significance

The introduced methodology pushes operando catalysis research to a new level, due to the acquisition of 3D spatially-resolved chemical and structural information which is directly correlated based on position within the pellet. Future experiments will focus on gaining detailed insights into reaction systems under industrially relevant conditions. The results could then be used to understand phase changes which offers fundamental new insights into catalyst structure and reaction mechanism.

References

[1] B. Sosna, O. Korup, R. Horn, J. Catal. 381, 2020, p.285.

[2] J. Becher et al, (10.3390/catal11040459)

[3] B. Wollak et al, J. Catal. in press, (2021)(10.1016/j.jcat.2021.08.029)