APOLLO OPERATIONS HANDBOOK
BLOCK II SPACECRAFT

VOLUME 1
SPACECRAFT DESCRIPTION

CONTRACT NAS 9-150
EXHIBIT I, PARAGRAPH 10.3

CHANGE NOTICE

LATEST CHANGED PAGES SUPERSEDE
THE SAME PAGES OF PREVIOUS DATE

Insert changed pages into basic publication. Destroy superseded pages.

PUBLISHED UNDER AUTHORITY OF THE NATIONAL AERONAUTICS AND SPACE ADMINISTRATION,
SPACECRAFT SYSTEMS OPERATION BRANCH, FLIGHT CREW SUPPORT DIVISION.

SID 66-1508

15 APRIL 1969
CHANGED 15 OCT 1969

LIST OF EFFECTIVE PAGES

INSERT LATEST CHANGED PAGES. DESTROY SUPERSEDED PAGES.

NOTE: The portion of the text affected by the changes is indicated by a vertical line in the outer margins of the page.

TOTAL NUMBER OF PAGES IN THIS PUBLICATION IS 978, CONSISTING OF THE FOLLOWING:

Page	Issue
*Title	15 Oct 69
*A thru E	15 Oct 69
*i thru ii	15 Oct 69
iii thru iv	Basic
*v	15 Oct 69
vi	Basic
*vii thru viii	15 Oct 69
*1-1	15 Oct 69
1-2 thru 1-7	Basic
1-8 thru 1-9	16 July 69
1-10	Basic
*1-11	15 Oct 69
1-12 thru 1-20	Basic
1-21	16 July 69
1-22 thru 1-34	Basic
*1-35	15 Oct 69
1-36 thru 1-38	16 July 69
1-38A thru 1-38B	16 July 69
1-39 thru 1-52	Basic
2-1 thru 2-2	Basic
2.1-1	Basic
2.1-2 thru 2.1-4	16 July 69
2.1-5	Basic
2.1-6	16 July 69
2.2-1 thru 2.2-37	16 July 69
*2.2-38 thru 2.2-42	15 Oct 69
*2.2-42A thru 2.2-42B	15 Oct 69
2.3-1 thru 2.3-4	Basic
*2.3-5	15 Oct 69
2.3-6	16 July 69
2.3-7 thru 2.3-14	Basic
*2.3-15 thru 2.3-16	15 Oct 69
*2.3-16A thru 2.3-16D	15 Oct 69
*2.3-17	15 Oct 69
2.3-18 thru 2.3-23	Basic
*2.3-24 thru 2.3-25	15 Oct 69
2.3-26	Basic
2.3-27 thru 2.3-28	16 July 69
*2.3-29	15 Oct 69
2.3-30 thru 2.3-31	Basic
*2.3-32 thru 2.3-36	15 Oct 69
*2.3-36A thru 2.3-36B	15 Oct 69
*2.3-37	15 Oct 69
2.3-38	16 July 69
*2.3-39	15 Oct 69
2.3-40	Basic
*2.3-41	15 Oct 69
2.3-42	Basic
*2.3-43	15 Oct 69
2.3-44	Basic
*2.3-45	15 Oct 69
2.3-46	Basic
2.3-47	16 July 69
*2.3-48 thru 2.3-50	15 Oct 69
*2.3-50A thru 2.3-50D	15 Oct 69
2.3-51	16 July 69
*2.3-52	15 Oct 69
2.3-53	16 July 69
*2.3-54 thru 2.3-57	15 Oct 69
2.3-58 thru 2.3-60	Basic
2.3-61 thru 2.3-62	16 July 69
*2.3-63 thru 2.3-68	15 Oct 69

*The asterisk indicates pages changed, added, or deleted by the current change.

Manuals will be distributed as directed by the NASA Apollo Project Office. All requests for manuals should be directed to the NASA Apollo Spacecraft Project Office at Houston, Texas.

RECORD OF PUBLICATION

This issue of the Apollo Operations Handbook, Block II, Volume 1, dated 15 April 1969, constitutes a basic issue of the handbook - Volume 1. Subsequent changes may be issued to maintain information current with the spacecraft configuration through completion of its mission. This record will reflect the publication date of any released changes.

Basic Date	Change Date
15 April 1969	16 July 1969
	15 Oct 1969

LIST OF EFFECTIVE PAGES

INSERT LATEST CHANGED PAGES. DESTROY SUPERSEDED PAGES.

NOTE: The portion of the text affected by the changes is indicated by a vertical line in the outer margins of the page.

Page	Issue
2.4-1	16 July 69
2.4-2	Basic
*2.4-3 thru 2.4-4	15 Oct 69
2.4-5 thru 2.4-6	16 July 69
2.4-7 thru 2.4-12	Basic
*2.4-13	15 Oct 69
2.4-14	16 July 69
2.4-15 thru 2.4-19	Basic
2.4-20	16 July 69
*2.4-21 thru 2.4-22	15 Oct 69
2.4-23 thru 2.4-26	Basic
*2.4-27 thru 2.4-28	15 Oct 69
2.4-29 thru 2.4-31	Basic
2.4-32	16 July 69
*2.4-33 thru 2.4-35	15 Oct 69
2.4-36 thru 2.4-38	Basic
*2.4-39	15 Oct 69
2.4-40	Basic
2.4-41 thru 2.4-44	16 July 69
2.4-45	Basic
2.4-46 thru 2.4-48	16 July 69
2.5-1	16 July 69
2.5-2 thru 2.5-8	Basic
2.5-9 thru 2.5-10	16 July 69
2.5-11 thru 2.5-20	Basic
2.5-21	16 July 69
2.5-22 thru 2.5-25	Basic
*2.5-26	15 Oct 69
2.5-27 thru 2.5-40	Basic
*2.5-41 thru 2.5-42	15 Oct 69
2.5-43 thru 2.5-50	Basic
2.6-1	16 July 69
2.6-2 thru 2.6-11	Basic
2.6-12 thru 2.6-14	16 July 69
2.6-15	Basic
2.6-16 thru 2.6-17	16 July 69
2.6-18 thru 2.6-28	Basic
2.6-29	16 July 69
2.6-30 thru 2.6-34	Basic
2.6-35 thru 2.6-36	16 July 69
*2.6-37 thru 2.6-38	15 Oct 69
2.6-39 thru 2.6-47	Basic
2.6-48	16 July 69
2.6-49 thru 2.6-53	Basic
2.6-54	16 July 69
2.6-55 thru 2.6-60	Basic
2.7-1 thru 2.7-13	Basic
*2.7-14 thru 2.7-15	15 Oct 69
2.7-16 thru 2.7-24	Basic
*2.7-25 thru 2.7-30	15 Oct 69
2.7-31 thru 2.7-34	Basic
2.8-1	Basic
*2.8-2	15 Oct 69
2.8-3 thru 2.8-22	Basic
*2.8-23	15 Oct 69
2.8-24	Basic
*2.8-24A thru 2.8-24B	15 Oct 69
*2.8-25	15 Oct 69
2.8-26 thru 2.8-59	Basic
*2.8-60 thru 2.8-62	15 Oct 69
2.9-1 thru 2.9-2	Basic
*2.9-3	15 Oct 69
2.9-4 thru 2.9-11	Basic
*2.9-12 thru 2.9-13	15 Oct 69
2.9-14 thru 2.9-20	Basic
*2.9-21 thru 2.9-26	15 Oct 69
2.9-27 thru 2.9-31	Basic
*2.9-32	15 Oct 69

*The asterisk indicates pages changed, added, or deleted by the current change.

Manuals will be distributed as directed by the NASA Apollo Project Office. All requests for manuals should be directed to the NASA Apollo Spacecraft Project Office at Houston, Texas.

LIST OF EFFECTIVE PAGES

INSERT LATEST CHANGED PAGES. DESTROY SUPERSEDED PAGES.

NOTE: The portion of the text affected by the changes is indicated by a vertical line in the outer margins of the page.

Page	Issue
2.9-33 thru 2.9-34.	Basic
*2.9-35	15 Oct 69
2.9-36 thru 2.9-37.	Basic
*2.9-38	15 Oct 69
2.9-39 thru 2.9-50.	Basic
*2.9-51 thru 2.9-52.	15 Oct 69
2.9-53 thru 2.9-70.	Basic
2.10-1 thru 2.10-2.	16 July 69
2.10-2A thru 2.10-2B	16 July 69
2.10-3	16 July 69
2.10-4	Basic
2.10-5 thru 2.10-6.	16 July 69
*2.10-7	15 Oct 69
2.10-8 thru 2.10-10	16 July 69
2.11-1	Basic
*2.11-2	15 Oct 69
2.11-3 thru 2.11-4.	Basic
2.12-1	16 July 69
*2.12-2 thru 2.12-8.	15 Oct 69
*2.12-8A thru 2.12-8B	15 Oct 69
*2.12-9	15 Oct 69
2.12-10 thru 2.12-11.	Basic
*2.12-12	15 Oct 69
*2.12-12A thru 2.12-12B	15 Oct 69
*2.12-13	15 Oct 69
2.12-14	Basic
2.12-15	16 July 69
*2.12-16 thru 2.12-21	15 Oct 69
2.12-22	16 July 69
*2.12-23	15 Oct 69
2.12-24	16 July 69
*2.12-25	15 Oct 69
2.12-26 thru 2.12-27.	Basic
2.12-28	16 July 69
*2.12-29 thru 2.12-30.	15 Oct 69
*2.12-30A thru 2.12-30B	15 Oct 69
2.12-31 thru 2.12-32.	Basic
*2.12-33 thru 2.12-34.	15 Oct 69
2.12-35	Basic
*2.12-36	15 Oct 69
2.12-37	16 July 69
*2.12-38 thru 2.12-40.	15 Oct 69
2.12-41 thru 2.12-43.	16 July 69
*2.12-44	15 Oct 69
2.12-45 thru 2.12-47.	16 July 69
2.12-48 thru 2.12-54.	Basic
*2.12-55	15 Oct 69
2.12-56	Basic
2.12-57	16 July 69
2.12-58	Basic
*2.12-59	15 Oct 69
2.12-60 thru 2.12-62.	16 July 69
*2.12-62A thru 2.12-62B	15 Oct 69
2.12-63	16 July 69
2.12-64 thru 2.12-65.	Basic
*2.12-66 thru 2.12-70.	15 Oct 69
*2.12-70A thru 2.12-70B	15 Oct 69
*2.12-71 thru 2.12-72.	15 Oct 69
*2.12-72A thru 2.12-72D	15 Oct 69
*2.12-73 thru 2.12-74.	15 Oct 69
*2.12-74A thru 2.12-74B	15 Oct 69
2.12-75	Basic
2.12-76	16 July 69
*2.12-77 thru 2.12-78.	15 Oct 69
*2.12-78A thru 2.12-78D	15 Oct 69
*2.12-79 thru 2.12-80.	15 Oct 69
*2.12-80A thru 2.12-80B	15 Oct 69
*2.12-81	15 Oct 69

*The asterisk indicates pages changed, added, or deleted by the current change.

Manuals will be distributed as directed by the NASA Apollo Project Office. All requests for manuals should be directed to the NASA Apollo Spacecraft Project Office at Houston, Texas.

LIST OF EFFECTIVE PAGES

INSERT LATEST CHANGED PAGES. DESTROY SUPERSEDED PAGES.

NOTE: The portion of the text affected by the changes is indicated by a vertical line in the outer margins of the page.

Page	Issue
2.12-82 thru 2.12-84	Basic
2.12-85	16 July 69
*2.12-86 thru 2.12-88	15 Oct 69
2.12-89 thru 2.12-92	Basic
*2.12-93	15 Oct 69
2.12-94 thru 2.12-97	Basic
2.12-98	16 July 69
*2.12-99	15 Oct 69
2.12-100 thru 2.12-108	Basic
2.13-1 thru 2.13-8	16 July 69
*2.13-9 thru 2.13-10	15 Oct 69
2.13-11 thru 2.13-17	16 July 69
2.13-18 thru 2.13-22	Basic
2.13-23	16 July 69
2.13-24	Basic
*2.13-25	15 Oct 69
2.13-26 thru 2.13-36	Basic
*2.13-37 thru 2.13-38	15 Oct 69
2.13-39	16 July 69
2.13-40 thru 2.13-42	Basic
3-1 thru 3-11	Basic
*3-12	15 Oct 69
3-13	Basic
3-14	16 July 69
3-15 thru 3-34	Basic
3-35	16 July 69
3-36 thru 3-40	Basic
3-41	16 July 69
*3-42	15 Oct 69
3-43 thru 3-84	Basic
*3-85	15 Oct 69
3-86	Basic
3-87	16 July 69
*3-88	15 Oct 69
3-89	16 July 69
3-90 thru 3-96	Basic
3-97	16 July 69
*3-98	15 Oct 69
3-99 thru 3-225	Basic
*3-226	15 Oct 69
3-227 thru 3-274	Basic
*3-275	15 Oct 69
3-276 thru 3-298	Basic
*3-299 thru 3-306	15 Oct 69
A-1 thru A-8	Basic
I-1	Basic
I-2 thru I-5	16 July 69
I-6 thru I-7	Basic
I-8	16 July 69
*I-9	15 Oct 69
I-10	16 July 69
*I-11	15 Oct 69
I-12	Basic
*I-13	15 Oct 69
I-14	16 July 69
I-15 thru I-16	Basic
I-17	16 July 69
I-18	Basic
I-19	16 July 69
*I-20	15 Oct 69
I-21 thru I-22	16 July 69

*The asterisk indicates pages changed, added, or deleted by the current change.

Manuals will be distributed as directed by the NASA Apollo Project Office. All requests for manuals should be directed to the NASA Apollo Spacecraft Project Office at Houston, Texas.

LIST OF EFFECTIVE PAGES

INSERT LATEST CHANGED PAGES. DESTROY SUPERSEDED PAGES.

NOTE: The portion of the text affected by the changes is indicated by a vertical line in the outer margins of the page.

CHANGE INFORMATION

This handbook is subject to continuous change or revision on a priority basis to reflect current engineering or spacecraft configuration changes, or to improve content or arrangement. The content and changes are accounted for by the above List of Effective Pages, and by the following means:

Record of Publication. The publication date of the basic issue and each change issue is listed on page i as a record of all editions.

Page Change Date. Each page in this handbook has space for entering a change date. The latest publication date will be entered in this space each time a page is changed from the basic issue.

*The asterisk indicates pages changed, added, or deleted by the current change.

Manuals will be distributed as directed by the NASA Apollo Project Office. All requests for manuals should be directed to the NASA Apollo Spacecraft Project Office at Houston, Texas.

FOREWORD

Volume 1 of the Apollo Operations Handbook constitutes the description of all command service module systems. Volume 2 is separately bound, and contains performance data and crew operational procedures.

This document has been derived from the most current available Apollo Block II information, and its contents are restricted to the specific requirements of Block II vehicles SC 106 and subs unless otherwise noted.

Effectivity Designations (Volume 1).

Information pertaining to all Block II spacecraft has no designation.

Information pertaining to a specific spacecraft is designated by SC number.

NASA comments or suggested changes to this handbook should be addressed to the Spacecraft Systems Branch, CFSD, Office Code CF22, Telephone HU3-4371.

TABLE OF CONTENTS

Section	Title	Page
1	SPACECRAFT	1-1
1.1	INTRODUCTION	1-1
1.2	LAUNCH VEHICLE AND BOOSTER CONFIGURATION	1-2
1.2.1	Saturn V Launch Vehicle	1-2
1.3	APOLLO SPACECRAFT CONFIGURATION	1-4
1.3.1	Launch Escape Assembly	1-4
1.3.2	Command Module	1-4
1.3.3	Service Module	1-49
1.3.4	Spacecraft LM Adapter	1-50
2	SYSTEMS DATA	2-1
2.1	GUIDANCE AND CONTROL	2.1-1
2.1.1	Guidance and Control Systems Interface	2.1-1
2.1.2	Attitude Reference	2.1-1
2.1.3	Attitude Control	2.1-3
2.1.4	Thrust and Thrust Vector Control	2.1-5
2.2	GUIDANCE AND NAVIGATION SYSTEM (G&N)	2.2-1
2.2.1	Introduction	2.2-1
2.2.2	Functional Description	2.2-2
2.2.3	Major Component/Subsystem Description	2.2-6
2.2.4	Operational Modes	2.2-28
2.2.5	Power Distribution	2.2-38
2.3	STABILIZATION AND CONTROL SYSTEM (SCS)	2.3-1
2.3.1	Introduction	2.3-1
2.3.2	Controls, Sensors, and Displays	2.3-2
2.3.3	Attitude Reference Subsystem	2.3-14
2.3.4	Attitude Control Subsystem (ACS)	2.3-20
2.3.5	Thrust Vector Control (TVC)	2.3-39
2.3.6	Power Distribution	2.3-48
2.3.7	Entry Monitor System	2.3-52
2.4	SERVICE PROPULSION SYSTEM (SPS)	2.4-1
2.4.1	Functional Description	2.4-1
2.4.2	Major Component/Subsystem Description	2.4-7
2.4.3	Performance and Design Data	2.4-41
2.4.4	Operational Limitations and Restrictions	2.4-44

Section	Title	Page
2.5	REACTION CONTROL SYSTEM (RCS)	2.5-1
2.5.1	SM RCS Functional Description	2.5-1
2.5.2	SM RCS Major Component/Subsystem Description	2.5-11
2.5.3	SM RCS Performance and Design Data	2.5-22
2.5.4	SM RCS Operational Limitations and Restrictions	2.5-25
2.5.5	CM RCS Functional Description	2.5-25
2.5.6	CM RCS Major Component/Subsystem Description	2.5-31
2.5.7	CM RCS Performance and Design Data	2.5-45
2.5.8	CM RCS Operation Limitations and Restrictions	2.5-48
2.6	ELECTRICAL POWER SYSTEM	2.6-1
2.6.1	Introduction	2.6-1
2.6.2	Functional Description	2.6-2
2.6.3	Major Component/Subsystem Description	2.6-6
2.6.4	Performance and Design Data	2.6-45
2.6.5	Operational Limitations and Restrictions	2.6-46
2.6.6	Systems Test Meter	2.6-49
2.6.7	Command Module Interior Lighting	2.6-51
2.7	ENVIRONMENTAL CONTROL SYSTEM (ECS)	2.7-1
2.7.1	Introduction	2.7-1
2.7.2	Functional Description	2.7-2
2.7.3	Oxygen Subsystem	2.7-6
2.7.4	Pressure Suit Circuit	2.7-11
2.7.5	Water Subsystem	2.7-14
2.7.6	Water-Glycol Coolant Subsystem	2.7-16
2.7.7	Electrical Power Distribution	2.7-24
2.7.8	ECS Performance and Design Data	2.7-24
2.8	TELECOMMUNICATION SYSTEM	2.8-1
2.8.1	Introduction	2.8-1
2.8.2	Functional Description	2.8-2
2.8.3	Major Component/Subsystem Description	2.8-6
2.8.4	Operational Limitations and Restrictions	2.8-58
2.9	SEQUENTIAL SYSTEMS	2.9-1
2.9.1	Introduction	2.9-1
2.9.2	General Description	2.9-5
2.9.3	Functional Description	2.9-16
2.9.4	Operational Description	2.9-20
2.9.5	Performance and Design Data	2.9-54
2.9.6	Operational Limitations and Restrictions	2.9-69
2.10	CAUTION AND WARNING SYSTEM	2.10-1
2.10.1	Introduction	2.10-1
2.10.2	Functional Description	2.10-1
2.10.3	Major Component/Subsystem Description	2.10-1
2.10.4	Operational Limitations and Restrictions	2.10-3

Section	Title	Page
2.11	MISCELLANEOUS SYSTEMS DATA	2.11-1
2.11.1	Introduction	2.11-1
2.11.2	Timers	2.11-1
2.11.3	Accelerometer (G-Meter)	2.11-1
2.11.4	Command Module Uprighting System	2.11-1
2.12	CREW PERSONAL EQUIPMENT	2.12-1
2.12.1	Introduction	2.12-1
2.12.2	Spacesuits	2.12-10
2.12.3	Crewman Restraints	2.12-24
2.12.4	Sighting and Illumination Aids	2.12-37
2.12.5	Mission Operational Aids	2.12-56
2.12.6	Crew Life Support	2.12-77
2.12.7	Medical Supplies and Equipment	2.12-94
2.12.8	Radiation Monitoring and Measuring Equipment	2.12-98
2.12.9	Postlanding Recovery Aids	2.12-100
2.12.10	Equipment Stowage	2.12-108
2.13	DOCKING AND TRANSFER	2.13-1
2.13.1	Introduction	2.13-1
2.13.2	Functional Description	2.13-8
2.13.3	Component Description	2.13-11
2.13.4	Performance and Design Data	2.13-39
2.13.5	Operational Limitations and Restrictions	2.13-41
3	CONTROLS AND DISPLAYS	3-1
3.1	INTRODUCTION	3-1
3.2	CONTROLS/DISPLAYS LOCATOR INDEX	3-2
Appendix		
A	ABBREVIATIONS AND SYMBOLS	A-1
	ALPHABETICAL INDEX	I-1

SECTION I

SPACECRAFT

1.1 INTRODUCTION.

The Apollo Operations Handbook consists of two volumes, 1 and 2. Volume 1 is the Spacecraft Description and Volume 2 is the Operational Procedures. Volume 1 has three sections: section 1 describes Apollo spacecraft general structure and mechanical systems; section 2 describes the Apollo spacecraft systems; and section 3, the Apollo spacecraft controls and displays. Volume 2 continues with two procedural sections: section 4 lists the steps of normal and backup procedures of all mission phases; and section 5 contains the contingency procedures for aborts, malfunctions, and emergencies.

Section 1 first describes the launch vehicle boosters that propel the Apollo spacecraft and lunar module (LM) into earth orbit and translunar injection. This description is followed by a fore to aft description of the Apollo spacecraft, which includes the launch escape assembly, command module with mechanical systems, service module, and the spacecraft lunar module adapter.

The spacecraft launch vehicle and booster combination have various designations. The following chart summarizes the mission letter designator, Apollo number, launch vehicle designator, and CSM number for the manned flights. A mission is defined and then given a letter designator; thus, the Mission Letter Designator. The Apollo Number designates the numerical order of launching, manned or unmanned, and is used primarily as a news media reference. The Launch Vehicle Designator indicates the booster configuration of the launch vehicle. The 200 series designates the Saturn IB and the 500 series designates the Saturn V. The command service module (CSM) assigned to the mission has a CSM number designator of three digits.

Mission Letter Designator	Apollo Number	Launch Vehicle Designator	CSM Number
Mission C	Apollo 7	Saturn IB (205)	101
Mission D	Apollo 8	Saturn V (503)	103
Mission E	Apollo 9	Saturn V (504)	104
Mission F	Apollo 10	Saturn V (505)	106
Mission G	Apollo 11	Saturn V (506)	107
Mission H-1	Apollo 12	Saturn V (507)	108
Mission H-2	Apollo 13	Saturn V (508)	109
Mission H-3	Apollo 14	Saturn V (509)	110

When improvements to the spacecraft systems are made, the system is modified. Modifications take effect on different spacecraft so the term "effectivity" is used. The effectivity of the Apollo spacecraft systems in this handbook is for CSM 106 and subsequent (subs) unless otherwise stated.

1.2 LAUNCH VEHICLE AND BOOSTER CONFIGURATION.

The launch vehicle used in the Apollo program is illustrated in figure 1-1. The Saturn V is programmed for earth orbital missions and/or lunar missions. The general configuration of the launch vehicle boosters is summarized in the following paragraphs.

1.2.1 SATURN V LAUNCH VEHICLE.

The Saturn V is a three-stage vehicle consisting of an S-IC first stage, S-II second stage, and an S-IVB third stage.

1.2.1.1 First Stage S-IC Booster.

The S-IC is manufactured by the Boeing Company and uses five Rocketdyne F-1 engines. Each F-1 engine, burning RP-1 and liquid oxygen, produces 1,500,000 pounds of thrust for an overall first stage boost of 7,500,000 pounds of thrust. One engine will be rigidly attached at the stage centerline, while the others will gimbal for vehicle control.

1.2.1.2 Second Stage S-II Booster.

The S-II, or second-stage, is manufactured by the Space Division of North American Rockwell Corporation. The second-stage employs five Rocketdyne J-2 engines. Each J-2 engine burns liquid hydrogen and liquid oxygen, and produces 200,000 pounds of thrust for an overall second-stage boost of 1,000,000 pounds. The gimbaled engines will be mounted in a square pattern, with the fifth engine rigidly mounted in the center.

1.2.1.3 Third Stage S-IVB Booster.

The S-IVB third-stage is manufactured by McDonnell Douglas Corporation. The S-IVB employs a single Rocketdyne J-2 engine, burning liquid hydrogen and liquid oxygen to produce 200,000 pounds of thrust.

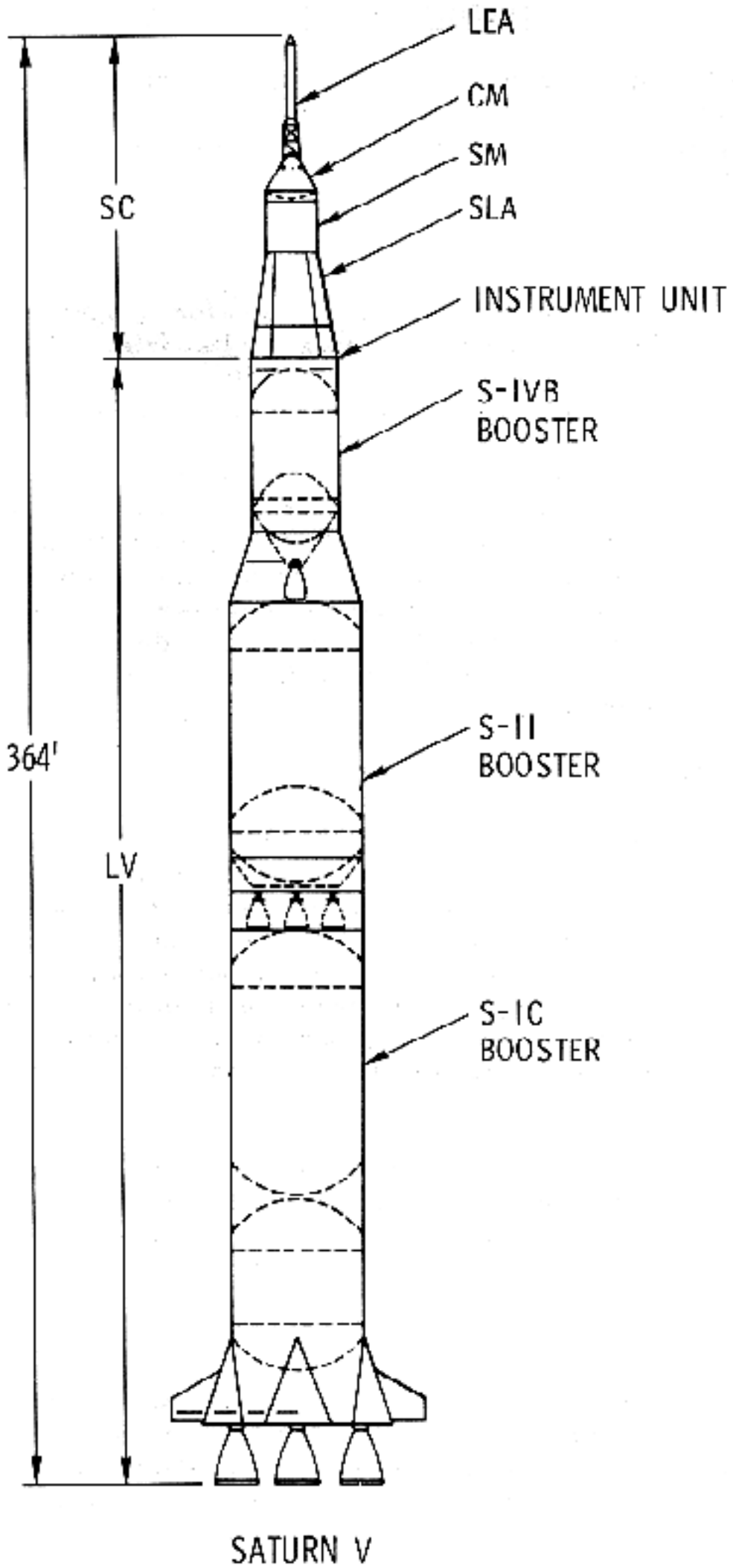

SM-2A-2031

Figure 1-1. Apollo Launch Vehicle

1.3 APOLLO SPACECRAFT CONFIGURATION.

The Block II spacecraft consists of a launch escape assembly (LEA), command module (CM), service module (SM), the spacecraft lunar module adapter (SLA), and the lunar module (LM). The reference system and stations are shown in figure 1-2.

1.3.1 LAUNCH ESCAPE ASSEMBLY.

The LEA (figure 1-3) provides the means for separating the CM from the launch vehicle during pad or suborbital aborts. This assembly consists of a Q-ball instrumentation assembly (nose cone), ballast compartment, canard surfaces, pitch control motor, tower jettison motor, launch escape motor, a structural skirt, an open-frame tower, and a boost protective cover (BPC). The structural skirt at the base of the housing, which encloses the launch escape rocket motors, is secured to the forward portion of the tower. The BPC (figure 1-4) is attached to the aft end of the tower to protect the CM from heat during boost, and from exhaust damage by the launch escape and tower jettison motors. Explosive nuts, one in each tower leg well, secure the tower to the CM structure. (For additional information, refer to the sequential systems in section 2, subsection 2.9).

1.3.2 COMMAND MODULE.

The CM (figure 1-5), the spacecraft control center, contains necessary automatic and manual equipment to control and monitor the spacecraft systems; it also contains the required equipment for safety and comfort of the flight crew. The module is an irregular-shaped, primary structure encompassed by three heat shields (coated with ablative material and joined or fastened to the primary structure) forming a truncated, conic structure. The CM consists of a forward compartment, a crew compartment, and an aft compartment for equipment and a crew. (See figure 1-6.)

The command module is conical shaped, 11 feet 1.5 inches long, and 12 feet 6.5 inches in diameter without the ablative material. The ablative material is non-symmetrical and adds approximately 4 inches to the height and 5 inches to the diameter.

1.3.2.1 Forward Compartment.

The forward compartment (figure 1-6) is the area outside the forward access tunnel, forward of the crew compartment forward bulkhead and covered by the forward heat shield. Four 90-degree segments around the perimeter of the tunnel contain the recovery equipment, two negative-pitch reaction control system engines, and the forward heat shield release mechanism. Most of the equipment in the forward compartment consists of earth landing (recovery) system (ELS) components.

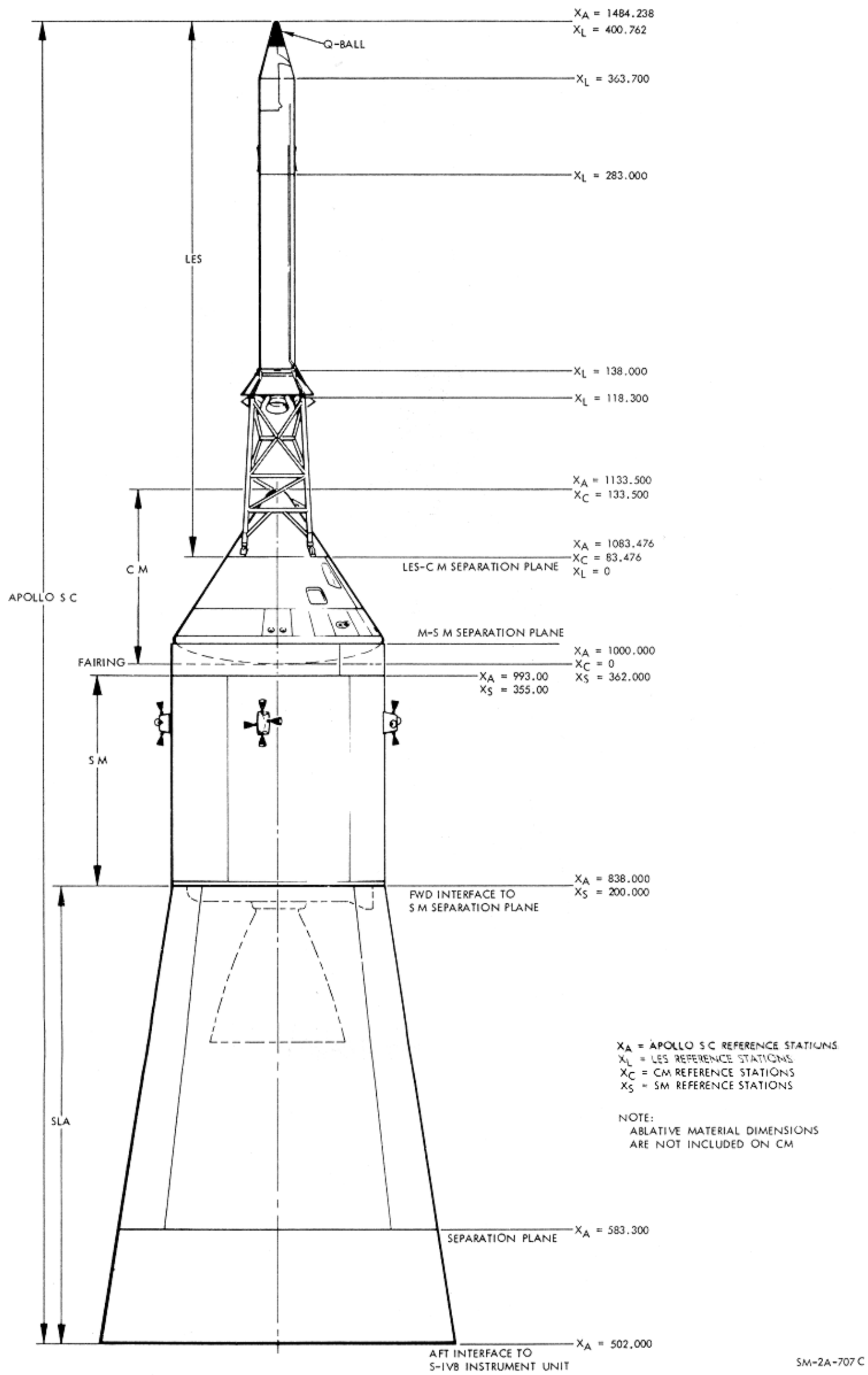

Figure 1-2. Block II Spacecraft Reference Stations

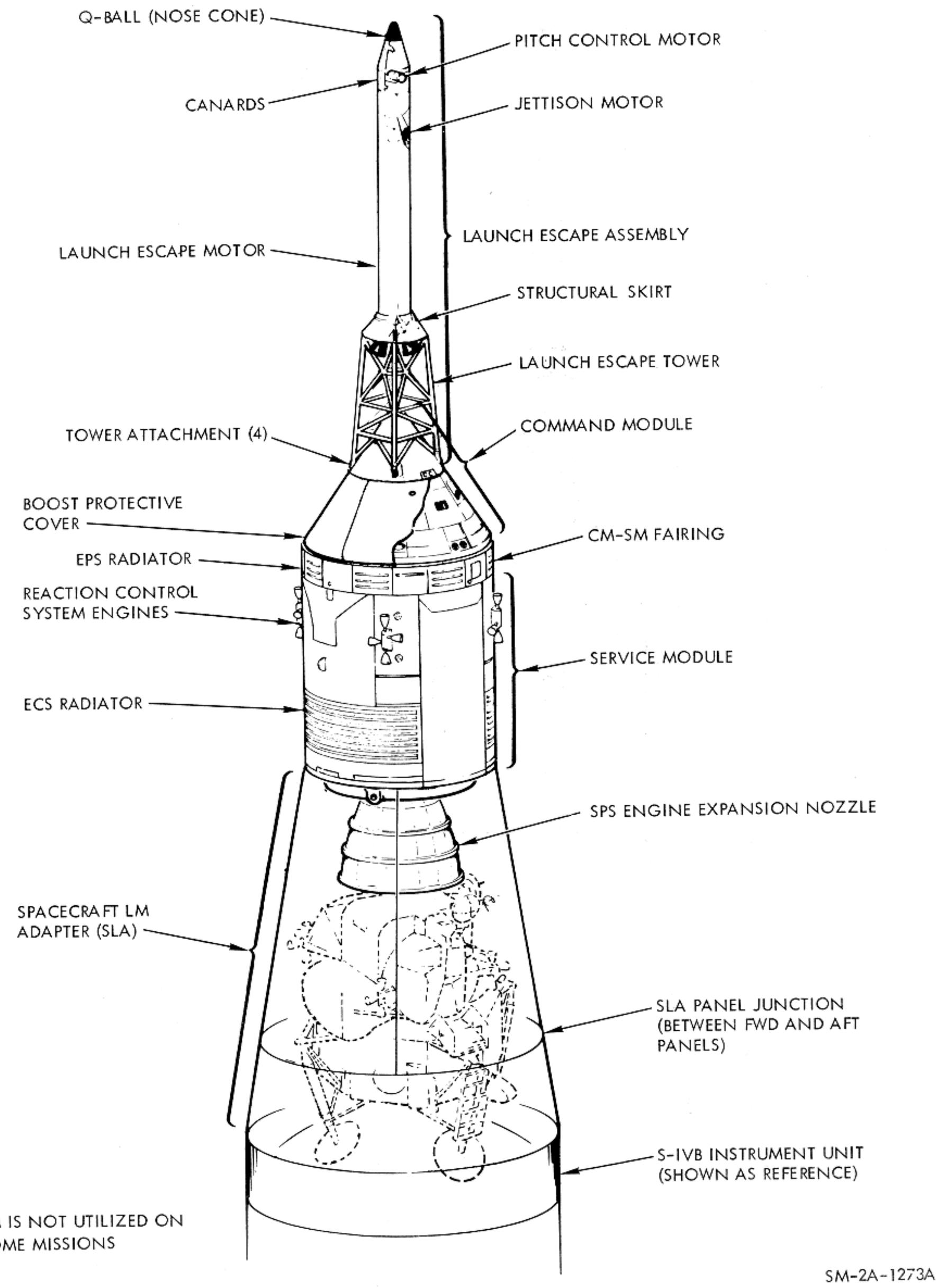

Figure 1-3. Block II Spacecraft Configuration

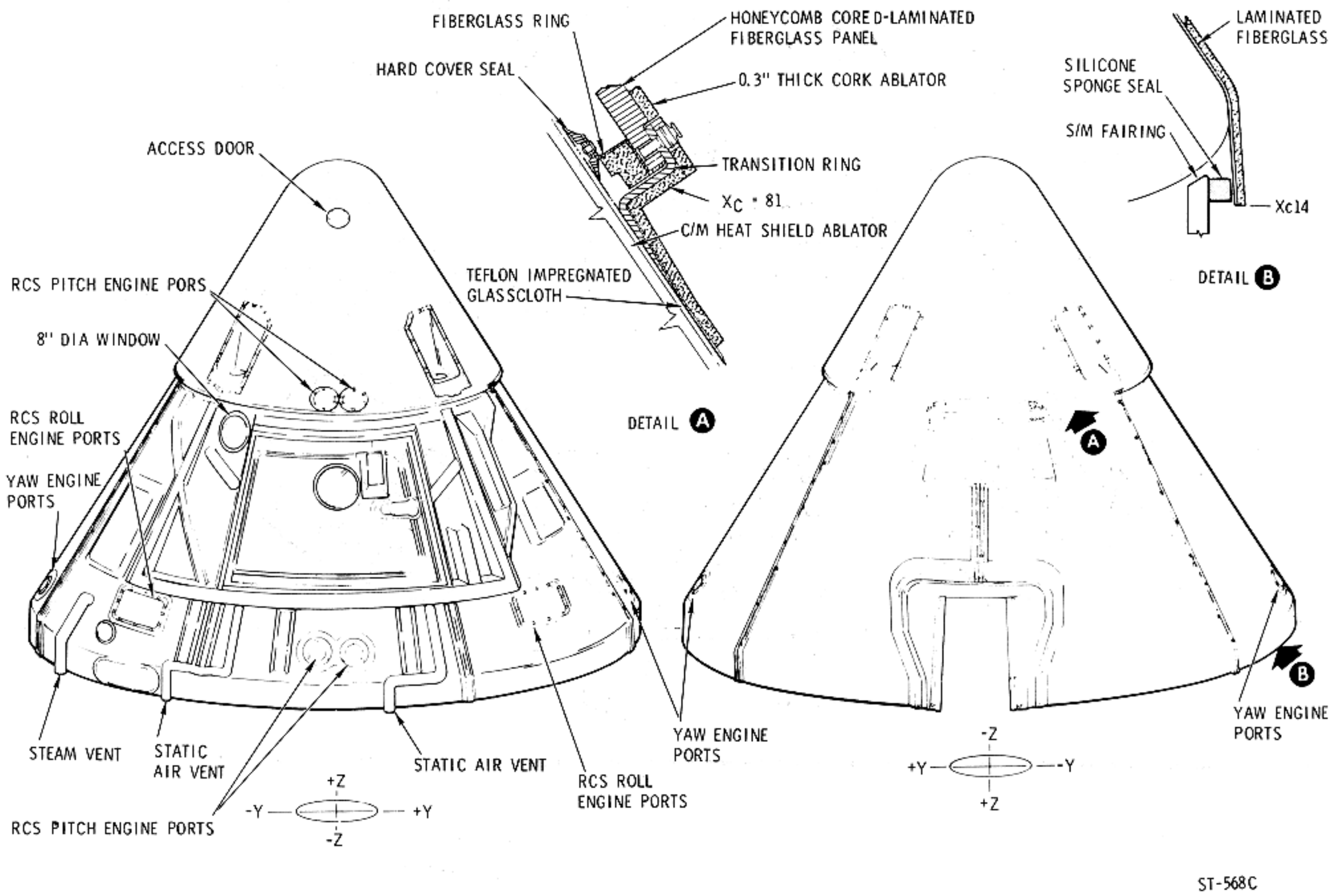

Figure 1-4. Boost Protective Cover

The forward heat shield is made of brazed stainless steel honeycomb covered with ablative material. It contains four recessed fittings which permit the launch escape tower to be attached to the CM inner structure. Jettison thrusters separate the forward heat shield from the CM after entry or after the LEA is separated during an abort.

1.3.2.2 Aft Compartment.

The aft compartment (figure 1-6) is the area encompassed by the aft portion of the crew compartment heat shield, aft heat shield, and aft portion of the primary structure. This compartment contains ten reaction control engines, impact attenuation structure, instrumentation, and

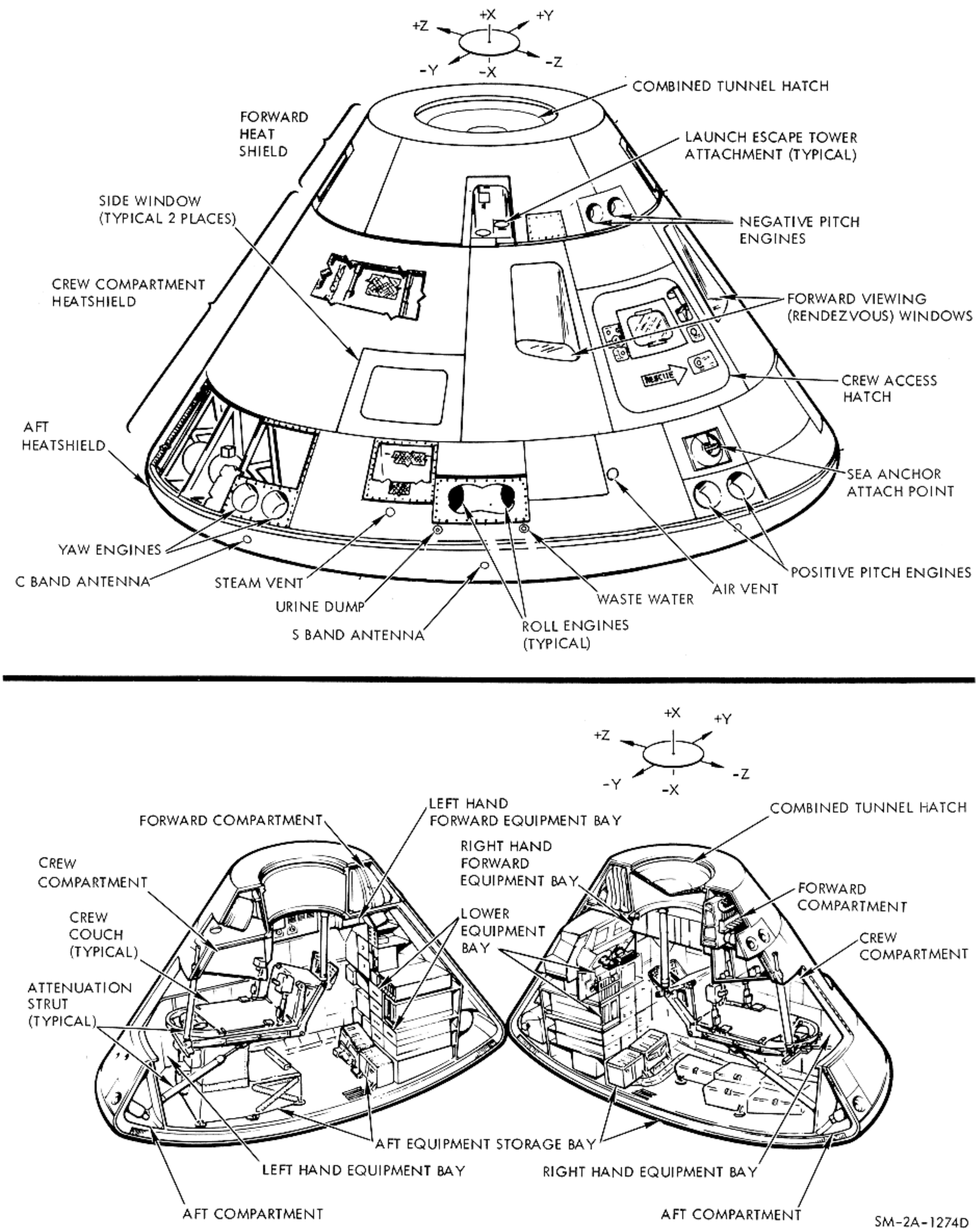

Figure 1-5. Block II Command Module

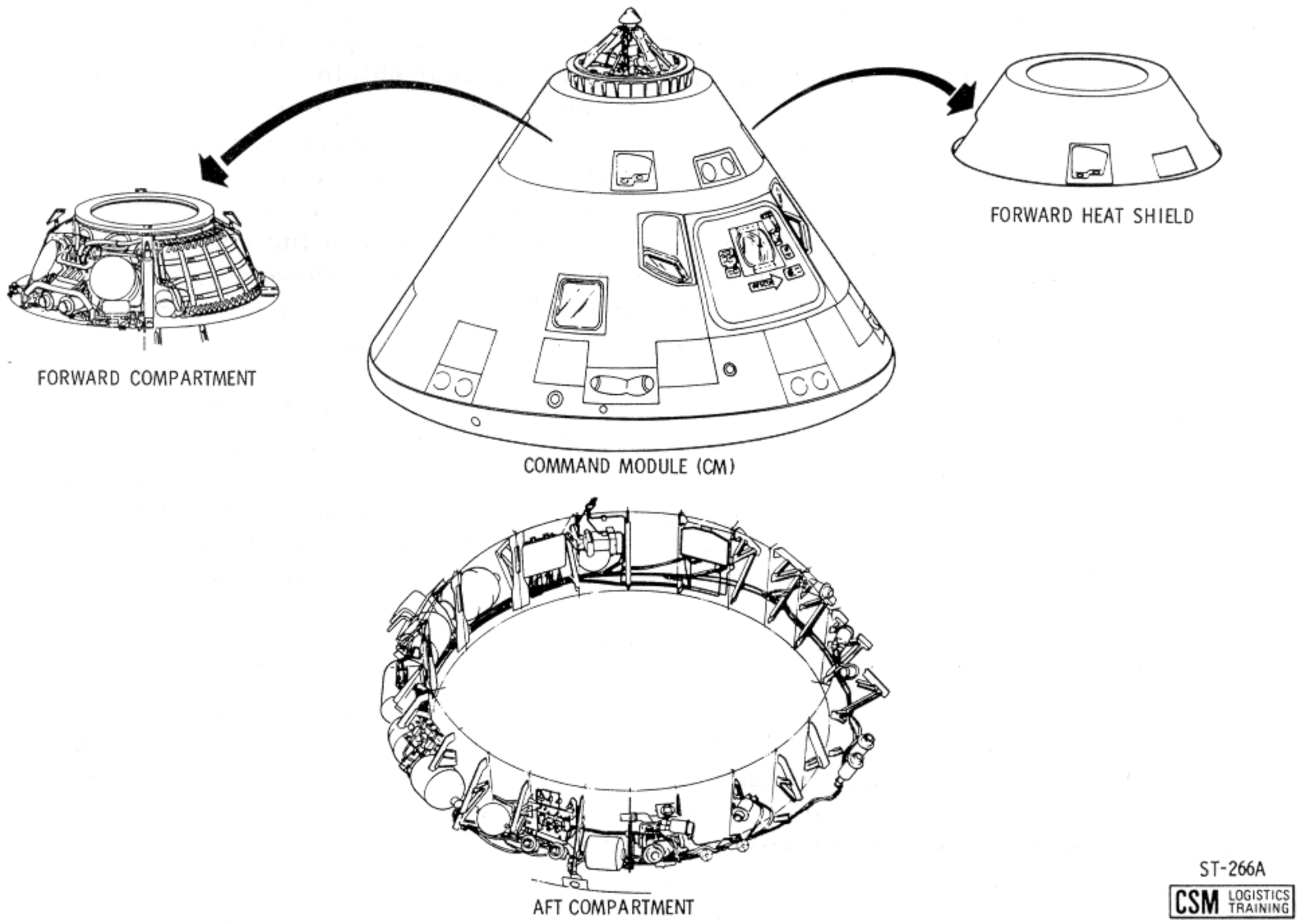

Figure 1-6. CM External Compartments

storage tanks for water, fuel oxidizer, and gaseous helium. Four crushable ribs, along the spacecraft +Z axis, are provided as part of the impact attenuation structure to absorb energy during impact.

The aft heat shield, which encloses the large end of the CM, is a shallow, spherically contoured assembly. It is made of the same type of materials as the forward heat shield. However, the ablative material on this heat shield has a greater thickness for the dissipation of heat during entry. External provisions are made on this heat shield for connecting the CM to the SM.

1.3.2.3 Crew Compartment.

The crew compartment or inner structure (figure 1-7) is a sealed cabin with pressurization maintained by the environmental control system (ECS). The compartment, protected by a heat shield, contains controls and displays for operation of the spacecraft and spacecraft systems, crew couches and restraint harness assemblies, hatch covers, window shades, etc., and is provided with crew equipment, food and water, waste management provisions, and survival equipment. Access hatches, observation windows, and equipment bays are attached as part of the compartment structure. The interior volume is 366 cubic feet. However, the lower, right, and left equipment bays, lockers, couches, and crewman occupy 156 cubic feet, leaving a usable volume of 210 cubic feet.

The crew compartment heat shield (figure 1-5), like the forward heat shield, is made of brazed stainless-steel honeycomb and covered with ablative material. This heat shield, or outer structure, contains the SC umbilical connector outlet, ablative plugs, a copper heat sink for the optical sighting ports in the lower equipment bay, two side observation windows, two forward viewing windows, and the side access hatch.

1.3.2.3.1 Crew Compartment and Equipment Bays.

Each crew member has personal and accessory equipment provided for his use in the crew compartment. Major items of personal equipment consist of a spacesuit assembly with attaching hose and umbilical, a communications assembly, biomedical sensors, and radiation dosimeters. Major items of accessory equipment shared by the crew consist of an in-flight tool set and a medical kit. For a detailed list of crew equipment, refer to section 2.12. General items contained in the CM equipment and stowage bays are listed in figures 1-26 and 1-27.

1.3.2.3.2 Protection Panels.

The protection panels prevent loose equipment (tools, etc.) and debris from getting into the various nooks and crevices in the crew compartment. They also suppress fire by closing out the equipment bays with covers around the aft bulkhead, and protect the ECS tubing from the zero g activities of the crew and the prelaunch activities of ground personnel. The location and configuration of the protection panels are illustrated in figure 1-8.

The protection panels (also referred to as close-out panels) are a series of aluminum panels and covers that fair the irregular structure to the equipment bays and wire troughs and covers. The panels vary in thickness and are attached to secondary structures by captivated fasteners. Access panels and penetrations are located at or over equipment and connectors needed for the mission.

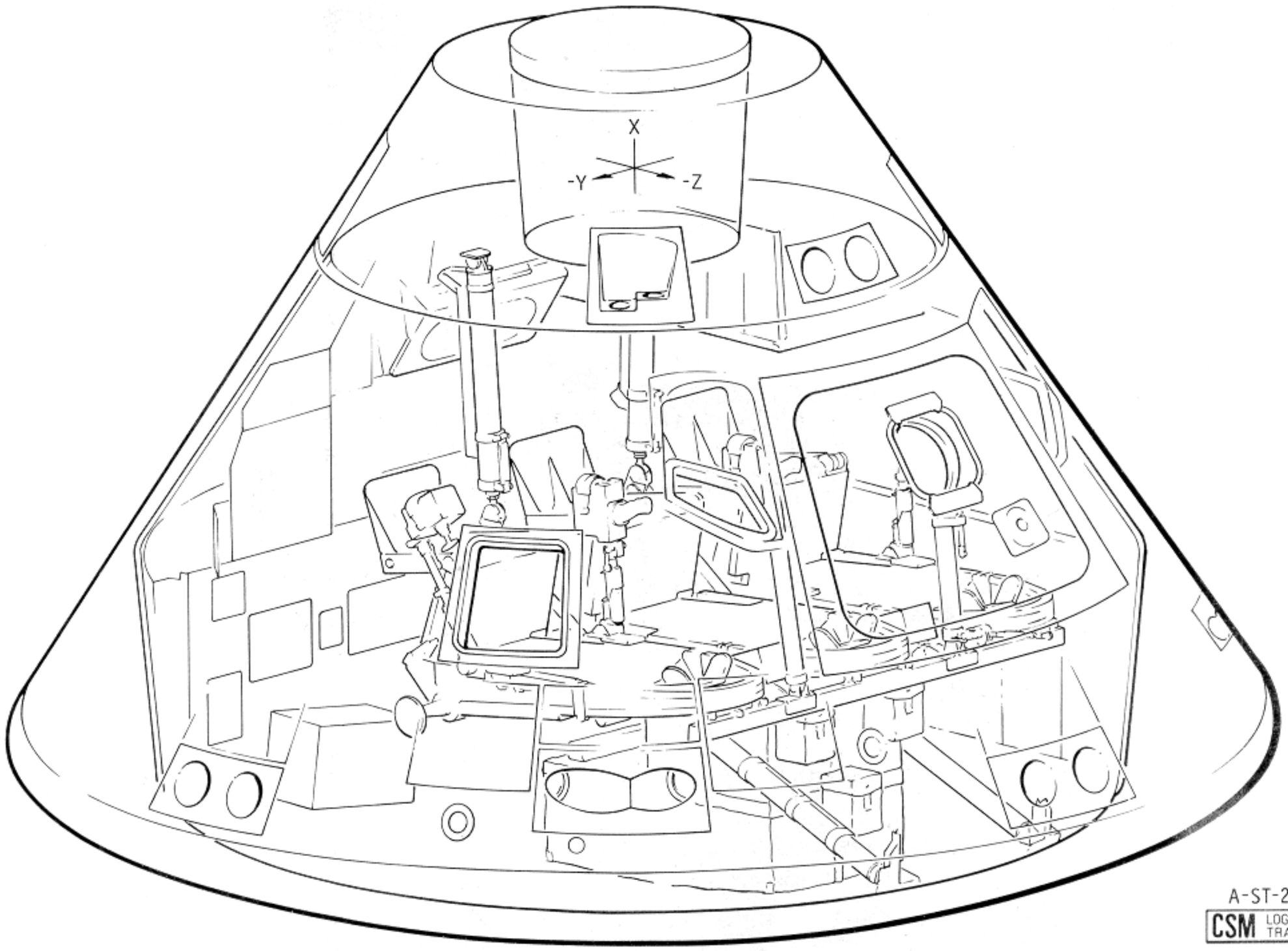

Figure 1-7. Apollo Crew Compartment

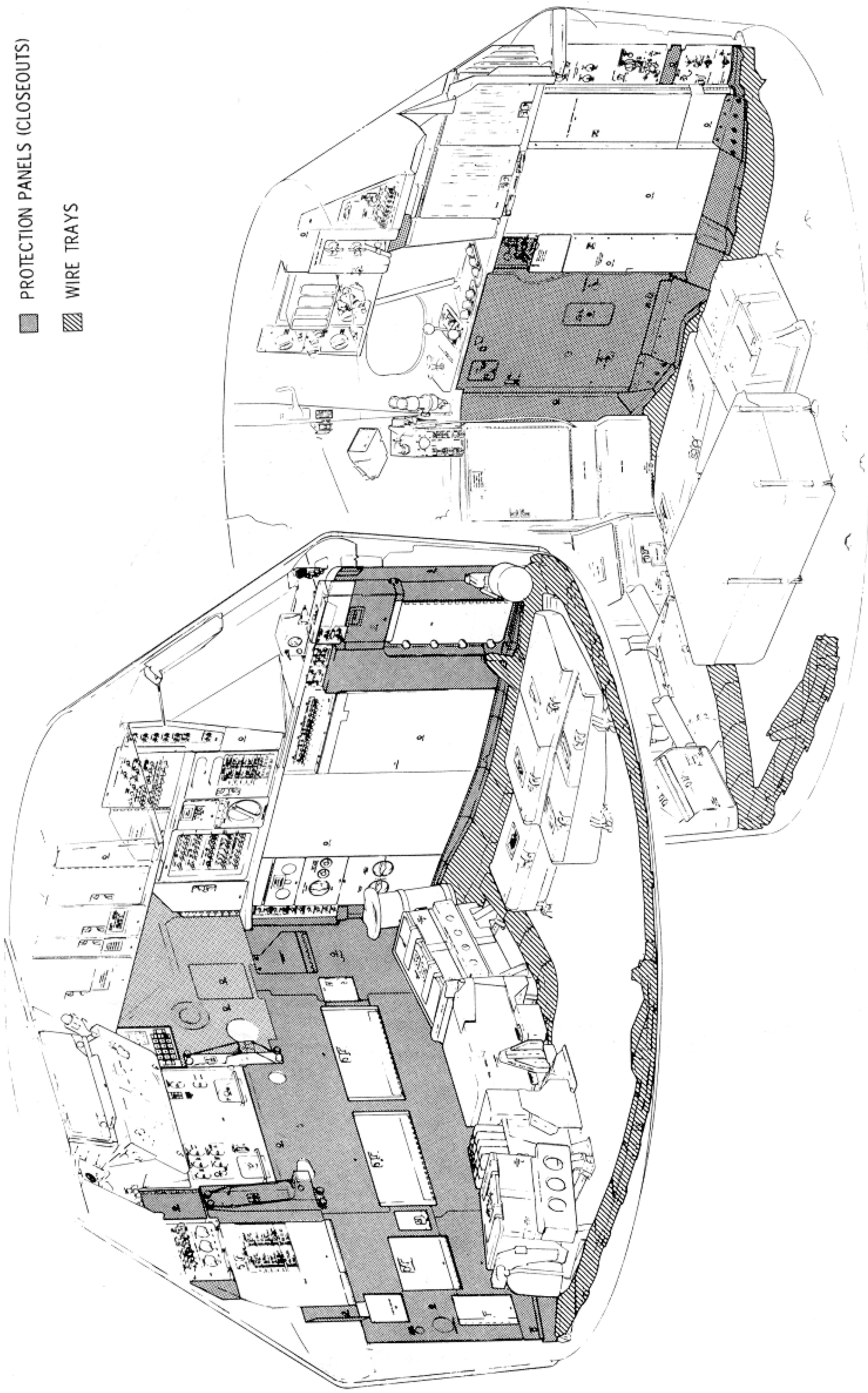

Figure 1-8. Closeout or Protection Panels

1.3.2.3.3 Loose Equipment Stowage.

The stowage of numerous items of personal and systems loose equipment is in compartments and lockers (figure 1-9). Compartments are part of the crew compartment structure. Equipment is placed in "cushions" and inserted into the compartments. The aluminum lockers are packed with equipment in an assembly building and are quickly attached to the aft bulkhead and equipment bays a short time before launch. This allows aft bulkhead access during spacecraft ground processing. The compartment and locker doors have squeeze-type latches and can be opened and closed with one hand.

1.3.2.4 SC Controls and Displays.

The controls and displays (panels, switches, gages, valve handles, etc.) for operation of the spacecraft and its systems are located throughout the crew compartment. The location, nomenclature, function, and power source of the controls and displays are provided in section 3 of this handbook. The panel numbers indicate the equipment bay and area of location. The panel numbering system is shown in figure 1-10. For instance, the 100 to 199 series will be located in the lower equipment bay (LEB). The LEB is divided into panel areas such as 100-119 in the upper left, 120-139 in the upper center, etc. The advantage of this system is (given a panel number and knowing the numbered areas) to enable the crew to pinpoint the area and locate the panel very quickly.

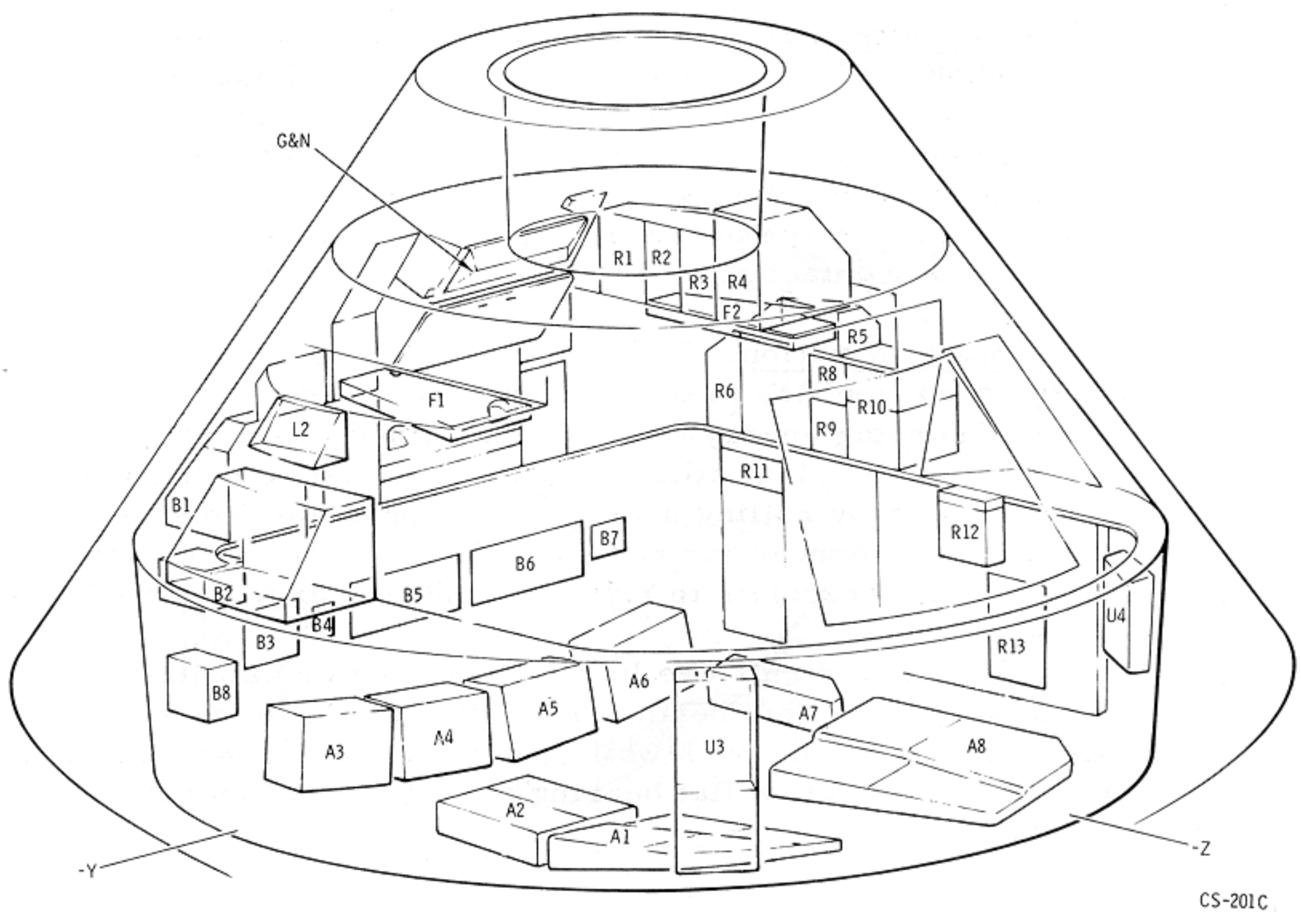

Figure 1-9. Stowage Compartments and Lockers

1.3.2.5 Crew Couches.

The primary function of the couches is to support the crew during accelerations/decelerations up to 30 g forward and aft (±X), 18 g up and down (±Z), and 15 g laterally (±Y). Because the critical g-load is during landing, an attenuation system is used to reduce the deceleration load on the crew. There are two attenuation subsystems, external and internal. Secondary function of the crew couches is to position crew at duty stations and provide support for the translation and rotation hand controls, lights, and other equipment.

The couches are designated (structurally) as left, center, and right; by crew position they are (left to right) Command (CDR), CSM Pilot (CMP), and LM Pilot (LMP).

1.3.2.5.1 CM Impact Attenuation System.

During a water impact, the CM deceleration force will vary from 12 to 40 g, depending on wave shape and horizontal velocity at impact. The impact attenuation system reduces the impact forces on the crew to a value within their tolerance level. A major portion of the energy (75 to 90 percent) is absorbed by the impact surface (water) and the deformation of the CM structure. The impact system is divided into two subsystems: external and internal, which are described in the following paragraphs.

External Attenuation. The external attenuation subsystem consists of four crushable ribs installed in the aft compartment (figure 1-11). The ribs, located between the inner and outer structure in the vicinity of the +Z axis, are constructed of bonded laminations of corrugated aluminum. The CM is suspended, during atmospheric descent, at a 27.5-degree angle (hang angle) by the parachute subsystem. Because of the hang angle, the first point of contact at impact is in the area of the crushable ribs.

Internal Attenuation. Eight attenuation struts are provided for connecting the crew couches to the CM inner structure. Each strut is capable of absorbing energy at a predetermined rate through "cyclic struts." The cyclic strut utilizes cyclic material deformation concept of energy absorption by rolling ductile metal torus elements (bracelets) in friction between a concentric rod and cylinder. The force applied to the struts causes the bracelets to roll, absorbing energy (figure 1-12).

Two Y-Y axis struts are located at the outer extremities of the couch assembly at the hip beam. The cylinder end of each strut is firmly attached to the unitized couch while the piston end, containing a flat circular foot, reacts against a flat bearing plate (attenuation panel) attached to the structure.

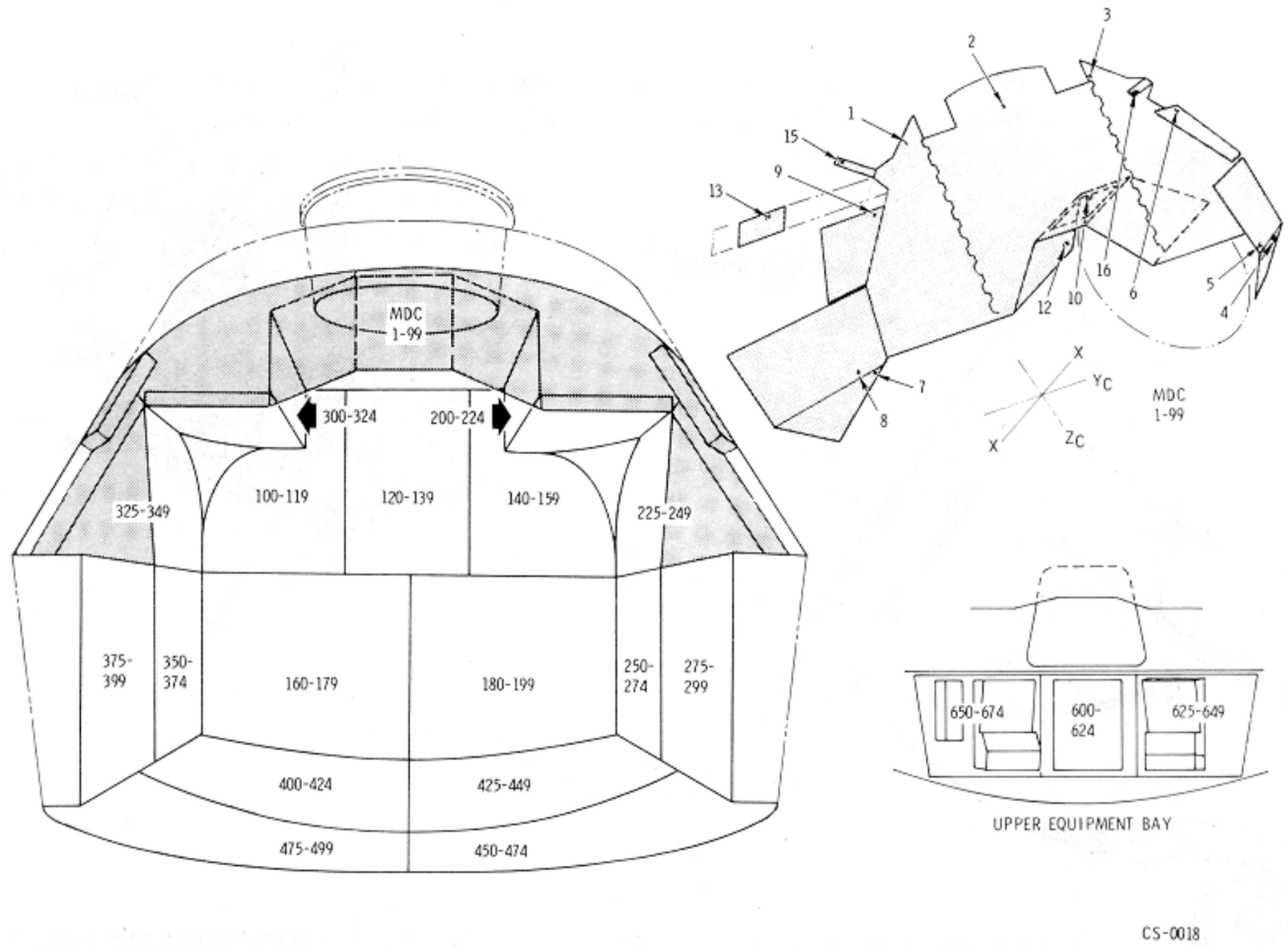

Figure 1-10. Controls and Displays Panel Numbering System

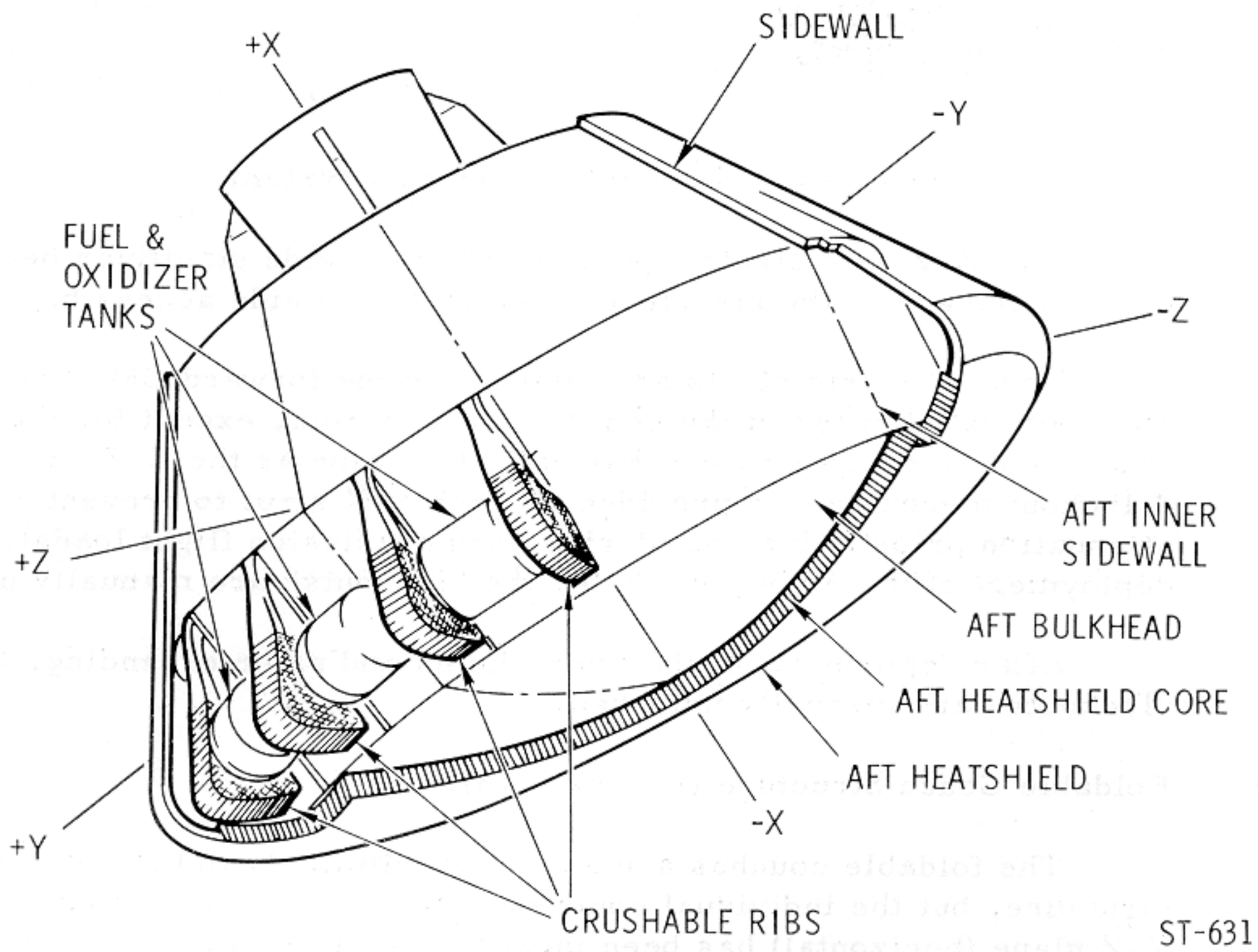

Figure 1-11. External Attenuation System

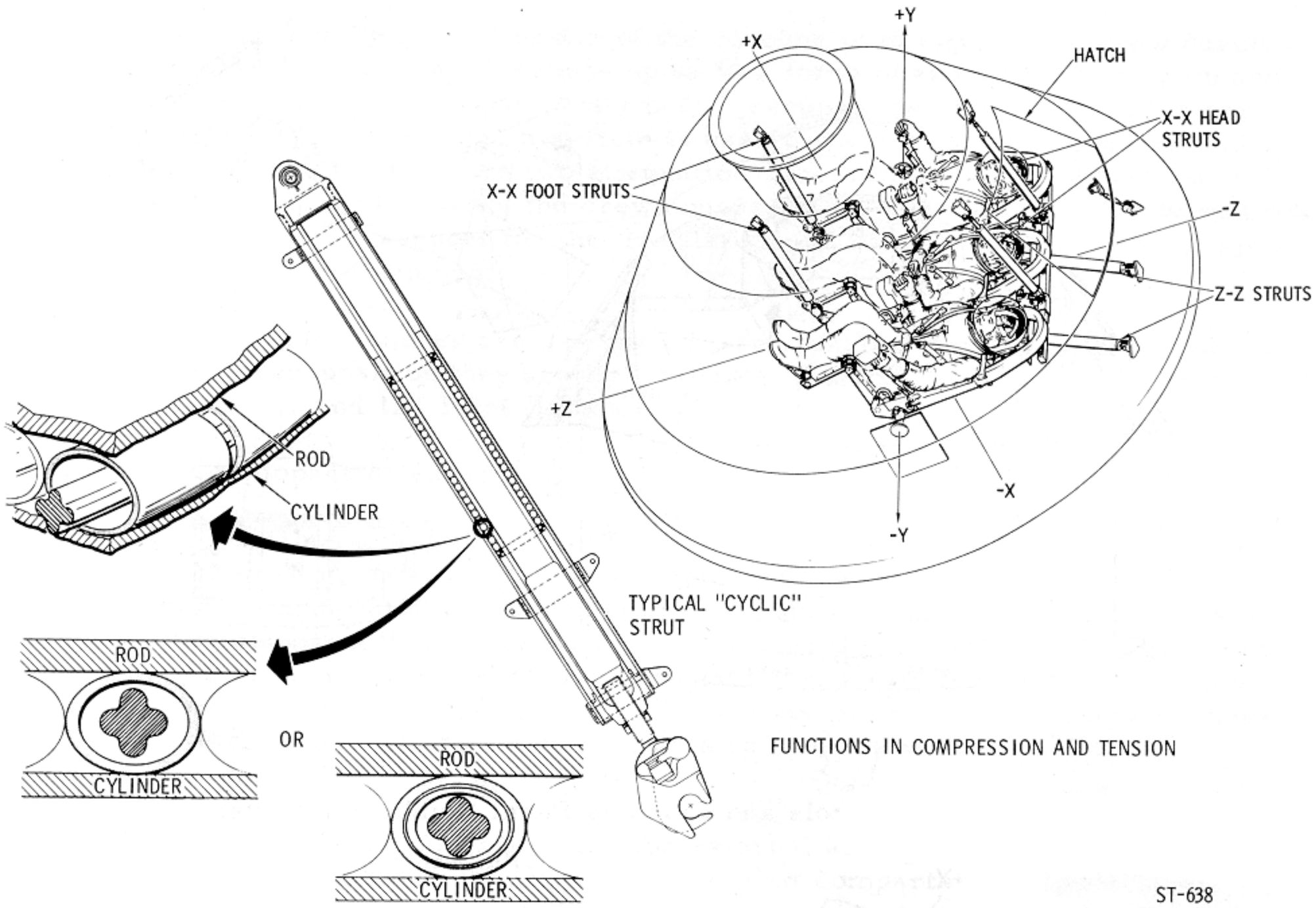

Figure 1-12. Internal Attenuation System

Two Z-Z axis struts are attached to the side stabilizer beams and the aft bulkhead of the structure, just below the side access hatch.

Four X-X axis struts are attached to the forward CM structure and the beam extremities of the couch. These struts, except for the addition of a lockout mechanism, are basically the same as the Z-Z axis struts. A lockout mechanism is provided on each X-X strut to prevent any strut attenuation prior to landing (during normal mission flight loads). After deployment of the main parachute, the "lockouts" are manually unlocked.

After deployment of the main chutes and prior to landing, the "lockouts" are manually unlocked.

1.3.2.5.2 Foldable Couch Structure (Figure 1-13).

The foldable couches are supported similarly to the unitized couch structure, but the individual couches differ. The back pan angle to the Y-Z plane (horizontal) has been increased to 4 degrees 30 minutes.

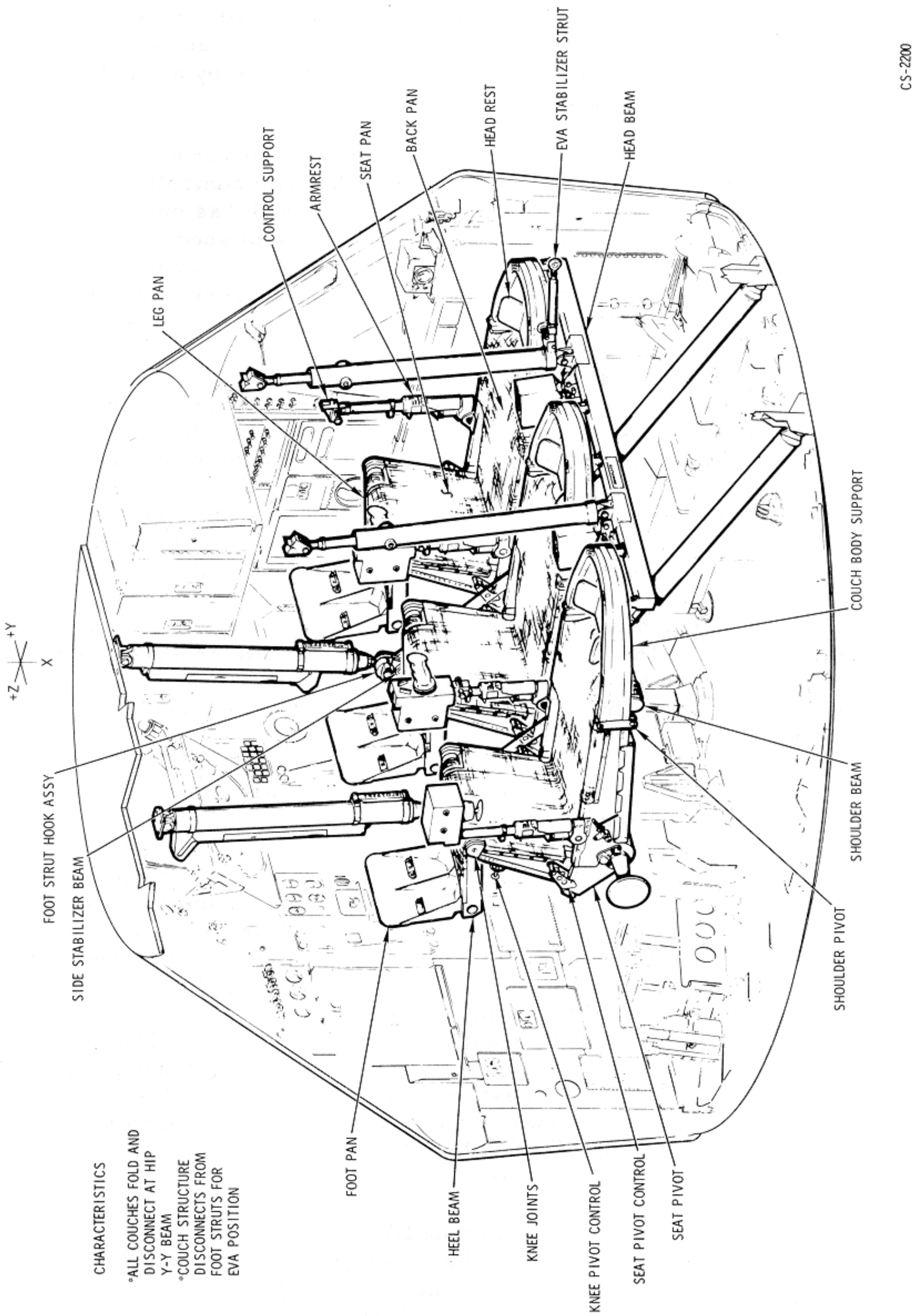

Figure 1-13. Apollo Foldable Crew Couch Structure

Description. The couch structure utilizes two strong side stabilizer beams for attachment of the foot XX and ZZ attenuator struts and a cross-member head beam for attachment of the head XX attenuator struts. The left, center, and right couches are attached to the head beam by a hinge/pip pin and are attached to the side stabilizer beam by a large Marmon-type clamp (figure 1-13).

Each couch consists of a headrest, body support with backpan, seat-pan, legpan, and footpan. The left couch has two controller supports/armrests, inboard and outboard. The right couch has only the inboard, or left, armrest. Support for the body is accomplished by a web or Armalon (multiple layers of fiberglass beta cloth, impregnated and covered with Teflon) over the support frame from the headrest to the footpan (figure 1-14).

The headrest is sheet steel with Teflon pad. To adjust it for crewman torso length, the headrest has 6-1/2 inches of longitudinal adjustment headward or footward in 1/4-inch increments. Adjustment is accomplished by the gearshift-type handle alongside of the headrest.

The body support, or backpan, consists of a steel rectangular-tube frame with a shoulder beam and a hip Y-Y beam. The hip beams of the outboard couches house the Y-Y attenuator struts on the outboard side.

The Marmon clamps that attach to the side stabilizer are part of the hip Y-Y beam. The body support frame will rotate around its attach point on the head beam and can fold at the shoulder beam. The shoulder straps of the restraint harness and one-half of the lap belts are solidly attached to the shoulder beam.

Controller supports/armrests rotate and are attached to the body support tubes in the area of the crewman's elbow and have various positions. The left couch outboard armrest has 65-, 90-, 120-, and 180-degree positions, measured from the backpan, and supports the translation control (figure 1-15). The other two armrests have 65-, 90-, 125-, and 180-degree positions. The armrests are held in position by a spring-loaded wedge into a slotted cam. The wedge is attached to a sleeve around the armrest. To rotate the armrest, the sleeve is lifted, the wedge pulled out of the cam, and the armrest rotated to the desired position. To extend the armrest, rotate the extension. The rotational and translation controls are locked on a dovetail by extending a pin; however, the controlling button extends into the center couch area. There is a danger of the center crewman bumping the control lock button and retracting the pin; therefore, a lock is on the shaft to prevent the button from being actuated accidentally.

The control support (with dovetail) pitches up and down, and is locked and unlocked at its pivot by a cam lever. The control support pivots to allow the correct positioning of the translation or rotation control during docking and the normal mission phases.

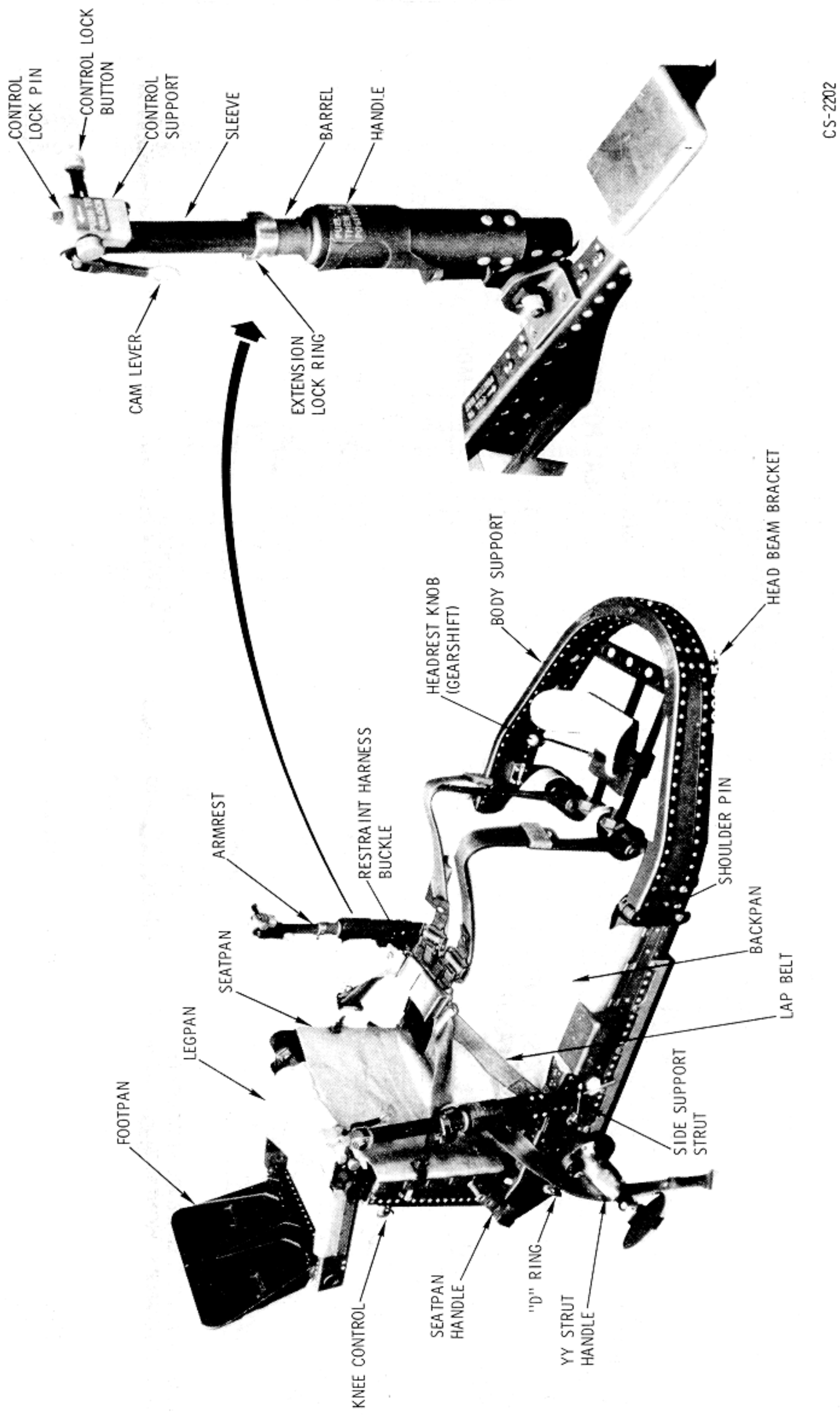

Figure 1-14. Foldable Couch Components

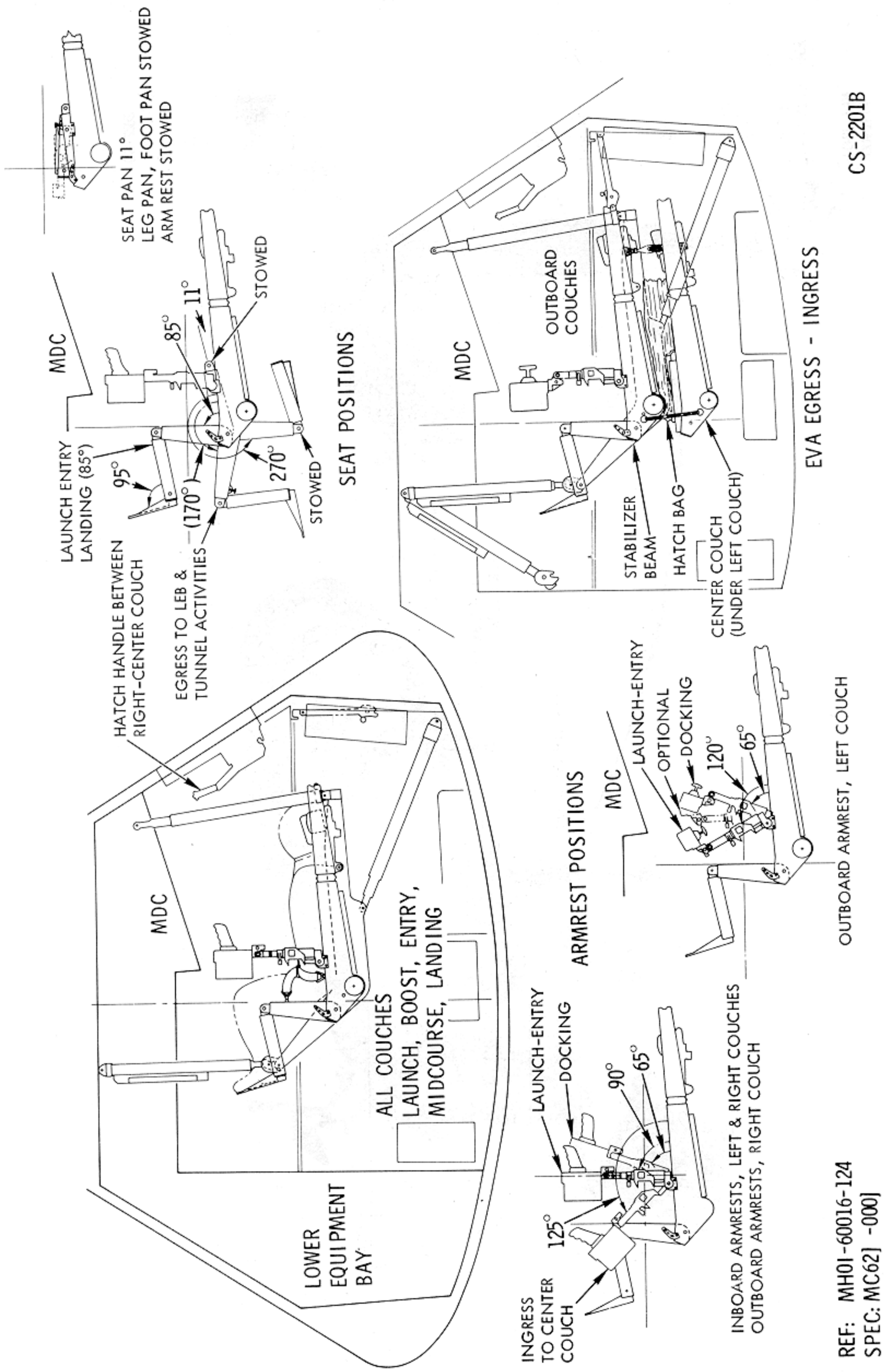

Figure 1-15. Foldable Couch Positions

The seatpan (seat) angles are 9, 85, 170, and 270 degrees. The 9-degree position is held by a detent, the 85- and 170-degree positions are lockable, and the seat travel is stopped at 270 degrees. The seatpan controls are located on the body supports at each side of the hips. The seat locked position is with the lever footward; the unlocked position is with the lever headward. One-half of the lap belt is attached to the seatpan frame.

The seatpan is connected to the legpan frame at the knee beam in a 78-degree angle. The knee control on each side of the couch locks and unlocks the seatpan to legpan angle. Unlocked, the seatpan-to-legpan angle will go to 15 degrees (folded), and to 180 degrees (flat).

The footpan has two positions, 95 degrees and folded (0 degrees). There are mechanical stops at each position. The footpan has two cleats and clamps which restrain the boots when properly engaged.

Seatpan, Legpan, Armrest, and Footpan Mission Positions. During the mission phases, there is a need to place the couch components into various positions. The following chart indicates the positions of the couch components during launch, boost, entry, and landing; egress-ingress to center couch to LEB and tunnel activities; EVA ingress or egress; and docking.

Mission Phases or Tasks (Figure 1-15)	Launch, Boost, Entry and Landing	Egress, Sleeping and Tunnel Activities	EVA Ingress or Egress	Docking
Seatpan angle	85°	170°	85°, 11° (cntr couch)	85°
Legpan angle	78°	78°	78°, 15° (cntr couch)	78°
Footpan angle	95°	95°	95°, 0° (cntr couch)	95°
Armrest angle outboard left couch	120°	120°	120°	65°
Armrest angle inboard left couch	90°	125° to 180°	125°	65°
Armrest angle inboard right couch	90°	125° to 180°	125°	65°
Control support pitch angle	0°	0°	0°	-25°
Foot X-X struts	Connected	Connected	Disconnected	Connected
EVA stabilizer strut	Stowed	Stowed	Connected	Stowed

Foldable Couch Adjustments. The couch has many adjustments that can be performed during the mission. The following chart gives a step by step procedure for making the adjustments, beginning with the headrest and progressing to the footrest. Because the couches are actuated in training during 1 g, the 1-g procedures are given also.

Task	Procedure	Results/Remarks
	NOTE • Directions are for person lying on couch. • Inboard/outboard movements - relative to couch.	
A. Headrest adjustment, headward - footward movement of 6.5 in. (figure 1-16)	1. Lift control knob (gearshift) toward head. 2. Hold gearshift knob in unlocked position and slide headrest to desired position. 3. Release gearshift knob.	1. Disengages lock. 2. Lock is spring-loaded to locked position. 3. Engages lock.
B. Armrest adjustments B1. Armrest rotation or pitching (Armrests lock in 65°, 90°, 120° (L) and 125° (R) positions) (figure 1-17)	1. Lift armrest handle. 2. Rotate (pitch) armrest to desired position. (Wedge will engage at next slot unless handle is lifted continually.)	1. Disengages wedge from slotted cam. 2. Wedge is spring-loaded to locked position. NOTE When rotating the outboard armrest of the left couch, caution should be exercised to prevent the [illegible]nal control cal[illegible]m hitting the stowed O_2 hose as damage may result to either object.
B2. Armrest extension (0-3.75 in.) (figure 1-17)	1. Rotate armrest extension lock ring away from couch. 2. Extend control to desired position. 3. Lock into position by rotating lock ring towards couch.	1. Full throw of about 160° will unlock sleeve. 2. Pulls sleeve out of barrel. 3. Cam will lock barrel to sleeve.

SPACECRAFT

Task	Procedure	Results/Remarks
B3. Control support pitching (Translation control pitch = 0°-55°) (Rotational control pitch = 0°-25°) (figure 1-17)	1. Move end of control support cam lever. 2. Holding control or handle, pitch it to desired angle. 3. Move end of cam lever down and outboard.	1. Unlocks control support. 3. Locks control support.
B4. Control attachment and locking, unlocking (figure 1-17)	1. Press control lock button down and swing lock hook away. 2. Press control lock button inboard. 3. Slide control onto support dovetail. 4. Press control lock button outboard. 5. Swing lock hook to button and hook on shaft (inboard armrests only).	1. Unlocks button so shaft can slide. 2. Retracts control lock pin. 3. Attaches control to support. 4. Extends control lock pin, locking control onto support. 5. Prevents control lock button from sliding to unlocked position.
C. Seatpan adjustment C1. Zero g seatpan adjustment, mid-mission application (Seatpan locks in 11°, 85°, 170°/stops at 270°.) (figure 1-16)	1. Place both seatpan handles in unlocked position (headward). 2. Move seatpan to desired position. 3. Place <u>one</u> handle in locked position (footward).	1. Disengages seatpan latches. Seatpan free to move. 3. One lock is sufficient in zero g.
C2. One g or greater seatpan adjustment, training, preflight, test, launch and entry application. (During one g, stand at LEB to adjust seatpan.) (figure 1-16)	1. Support seatpan (with hands or feet) and place <u>both</u> seatpan handles in unlocked position (headward). 2. Move seatpan to desired position, maintain support. 3. Place <u>both</u> seatpan handles in locked position (footward).	1. Damage may result to mechanisms if seatpan is allowed to drop to next position. 2. Same as 1. 3. In one g or greater, both latches may be locked to reduce strain on mechanisms.

Task	Procedure	Results/Remarks
D. Legpan to seatpan adjustment (15°, 78°) (During zero g, use one control. During one g or greater, use both controls and support legpan during movement.) (figure 1-18)	1. Pull knee control out and up to unlocked position. 2. Position legpan to desired position. 3. Pull knee control out and down to locked position.	1. Retract knee control pin from slotted cam. 3. Extends knee control pin, and locks.
E. Footpan adjustment (0°-95°) (figure 1-18)	1. Swing footpan to desired position.	1. Mechanical stops at 0° 95°.
E1. Engaging-disengaging foot restraints (figure 1-18)	1. Place both spacesuit boots or entry boots on footpan with heels together. 2. Move boots outboard while heels slide on footpan. 3. To disengage, move boots inboard while heels slide on footpan.	1. Pre positioning boots. 2. Footpan cleats will engage boot heels. 3. Cleats will disengage from boot heel.

Foldable Couch Mission Operations. During the mission, there are tasks into which the couches are integrated. The following table indicates some of those tasks and gives a step by step procedure. Figures are also referenced.

Task A, Preparing Couches for EVA, describes the folding of the L-shaped PGA stowage bag and the removing and stowing of the center couch in preparation for EVA. The removal and stowage of the center couch can also be performed when the center aisle needs to be cleared for intravehicular maneuvering purposes. In addition to clearing the center aisle for EVA, the whole couch structure (couches plus side beams and head beam) have to be stabilized when the foot X-X struts are disconnected. This operation is described in task B.

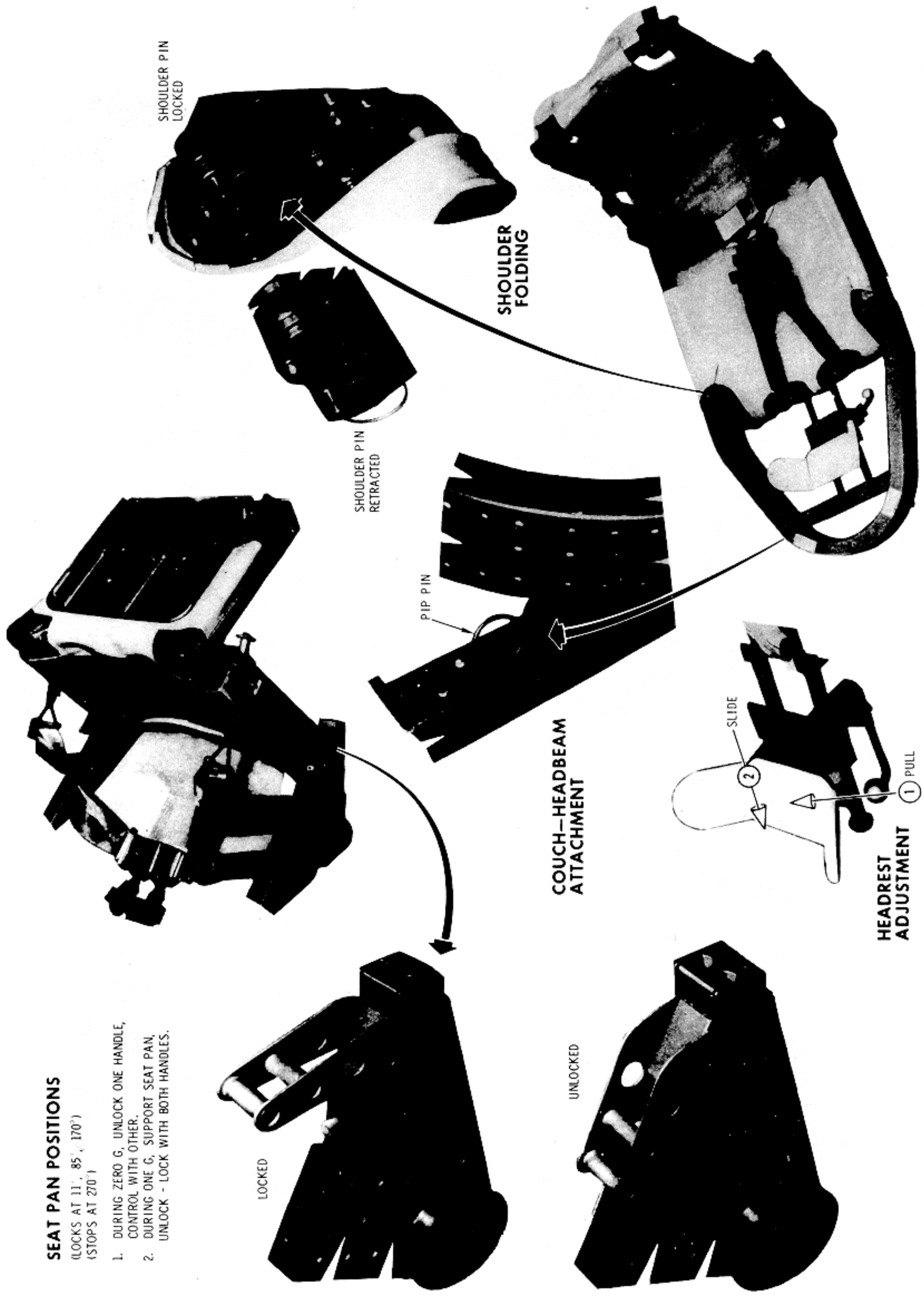

Figure 1-16. Couch Adjustments

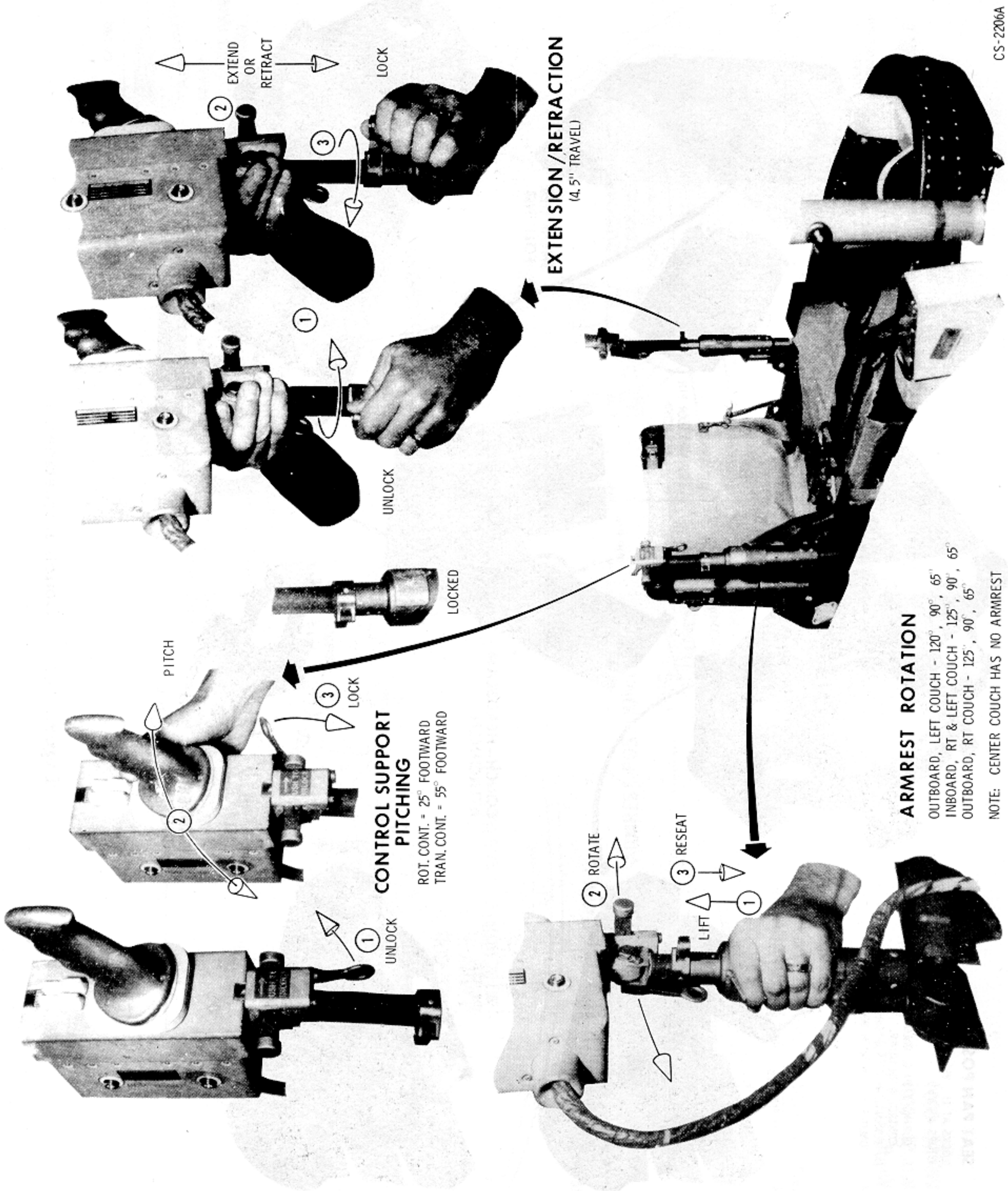

Figure 1-17. Armrest Positioning

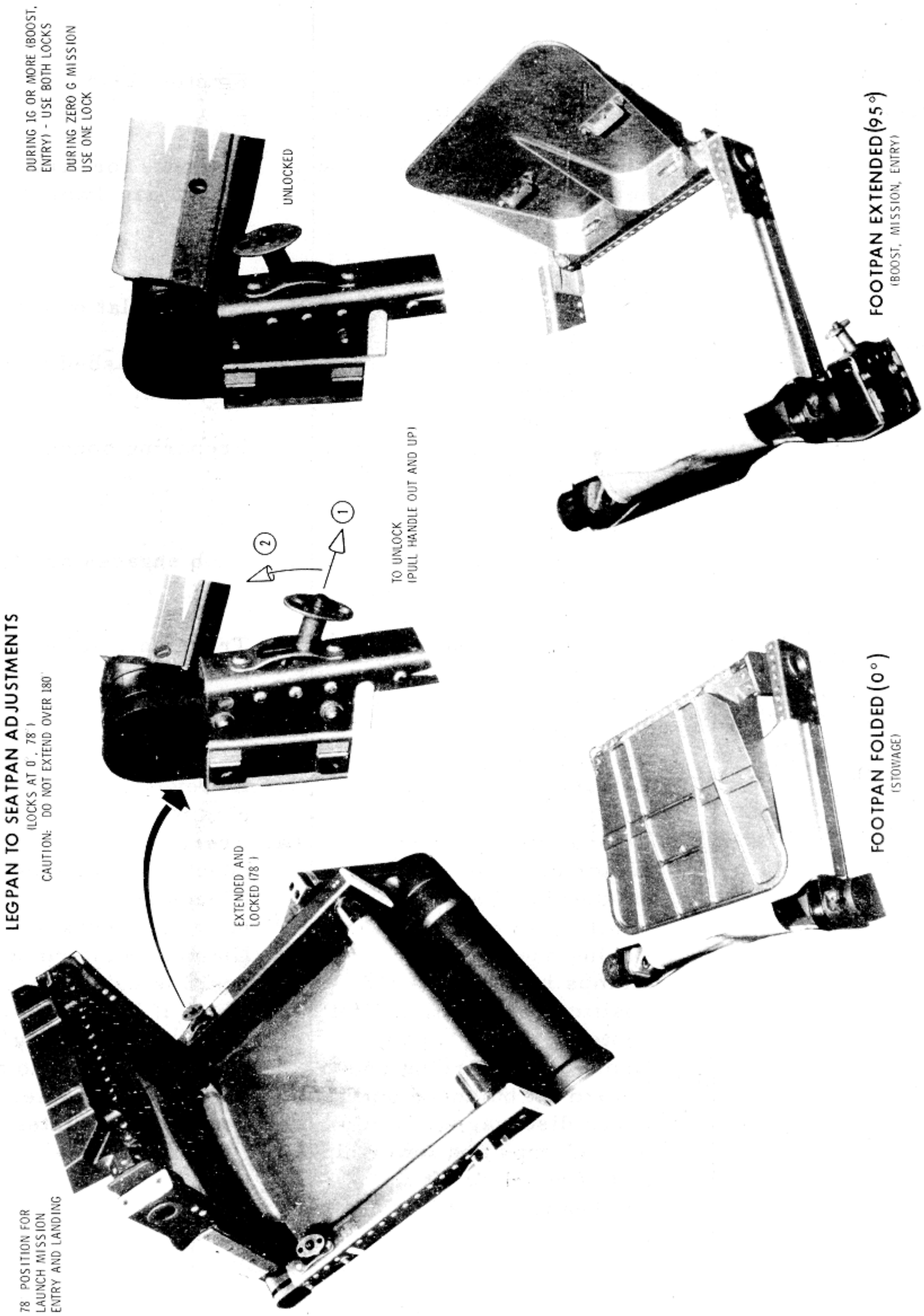

Figure 1-18. Legpan-Footpan Positions

SPACECRAFT

Task	Procedure	Results/Remarks
A. Preparing couches for EVA		
A1. Stow L PGA bag on aft bulkhead	1. Remove PGA helmet shield and stow in helmet bag.	1. Empties PGA bag.
	2. Unstrap bag hip straps and detach couch clips.	2. Detaches forward top of bag from couch.
	3. Fold lower half of bag flat, tucking sides.	
	4. Fold top half of bag flat, tucking sides.	4. Bag now flat on aft bulkhead.
	5. Attach bag top straps to aft bulkhead fittings.	5. Bag now lashed to aft bulkhead.
A2. Remove center couch to aft bulkhead (Crewman standing in LEB) (figure 1-19)	1. Fold footpan to 0°, lock legpan to 15°, and lock seatpan to 11°. (figure 1-20)	1. Preparing couch.
NOTE If the center couch is to be removed during one g conditions, the outboard (left and right) couches should <u>not</u> be occupied. Otherwise, extreme difficulty will be experienced during the removal.	2. Pull center couch hip clamp knobs down 2 in. (toward aft bulkhead).	2. Knob engages shaft.
	3. Using knob, unscrew shaft (CCW) until it is flush with trunnion.	3. Trunnion will be free to rotate.
	4. Swing knob towards LEB opening clamp.	
	5. Retract <u>one</u> Y-Y strut. (figure 1-21)	5. Relieves pressure on clamp plate.
	6a. During zero g, force center couch toward aft bulkhead and disengage couch from clamp plates.	6a. Frees footward end of couch from clamps. (Couch structure may have to be shaken.)
	6b. During one g, place clamps in intermediate position as a caution. Hold center couch backpan firmly while forcing couch toward aft bulkhead until couch disengages. Fully open clamps and lower hip end of couch to aft bulkhead.	6b. Clamps in intermediate position will support couch if it slips. Outboard couches may have to be lifted to take pressure off center couch clamp plates.

SPACECRAFT

Task	Procedure	Results/Remarks
	7. Move headrest footward. (figure 1-16)	7. Prep for strapping under left couch.
	8. Pull head beam pip pins (2). (figure 1-16)	8. Disconnects headward end of couch from head beam
	9. Lower couch to aft bulkhead on top of PGA bag.	9. Couch is now ready to stow.
A3. Stow center couch under left couch	1. Obtain lower (3.5 ft x 2 in.) and upper (4 ft x 2 in.) restrainer straps from stowage locker.	
	2. Thread lower strap hooks (2) through center couch hip holes from inside.	2. Preparing center couch to strap to left couch.
	3. Wrap upper strap around center couch headrest support bars and attach snap to ring.	
	4. Verify left couch headrest fully headward.	
	5. Position center couch under left couch, firmly pressing against tunnel hatch bag.	5. Head-to-head, hip-to-hip, and piggy back.
	6. Attach LOWER strap hooks to left couch D-rings.	6. Hip ends of couches now secured.
	7. Unsnap UPPER strap hook, resnap after wrapping around left couch headrest support bars.	7. Head ends of couches now secured.
B. Preparing couch structure for EVA. (figure 1-22)		
B1. Connect EVA stabilizer strut to couch.	1. Unstow EVA stabilizer strut by squeezing latch and pulling toward couch.	
	2. Connect EVA stabilizer strut to couch structure at aft end of right head strut. Engage stabilizer strut and press toward aft bulkhead.	2. With EVA stabilizer strut engaged, couch structure will be stabilized when foot struts are disconnected.

SPACECRAFT

Task	Procedure	Results/Remarks
B2. Disconnect foot attenuator struts and attach to forward equipment bays.	1. Grasp the quick-disconnect hook assembly, pull lock pin actuator toward lower equipment bay.	Holding lock pin actuator in disengages lock pin.
	2. Pull lower end of foot attenuator strut (quick-disconnect hook assembly) firmly toward LEB until it disengages.	
	3. Repeat for other foot X-X attenuator strut.	
	4. Swing attenuator struts along side of forward equipment bay, and strap.	Holds attenuator struts out of the way for increased mobility in LEB.

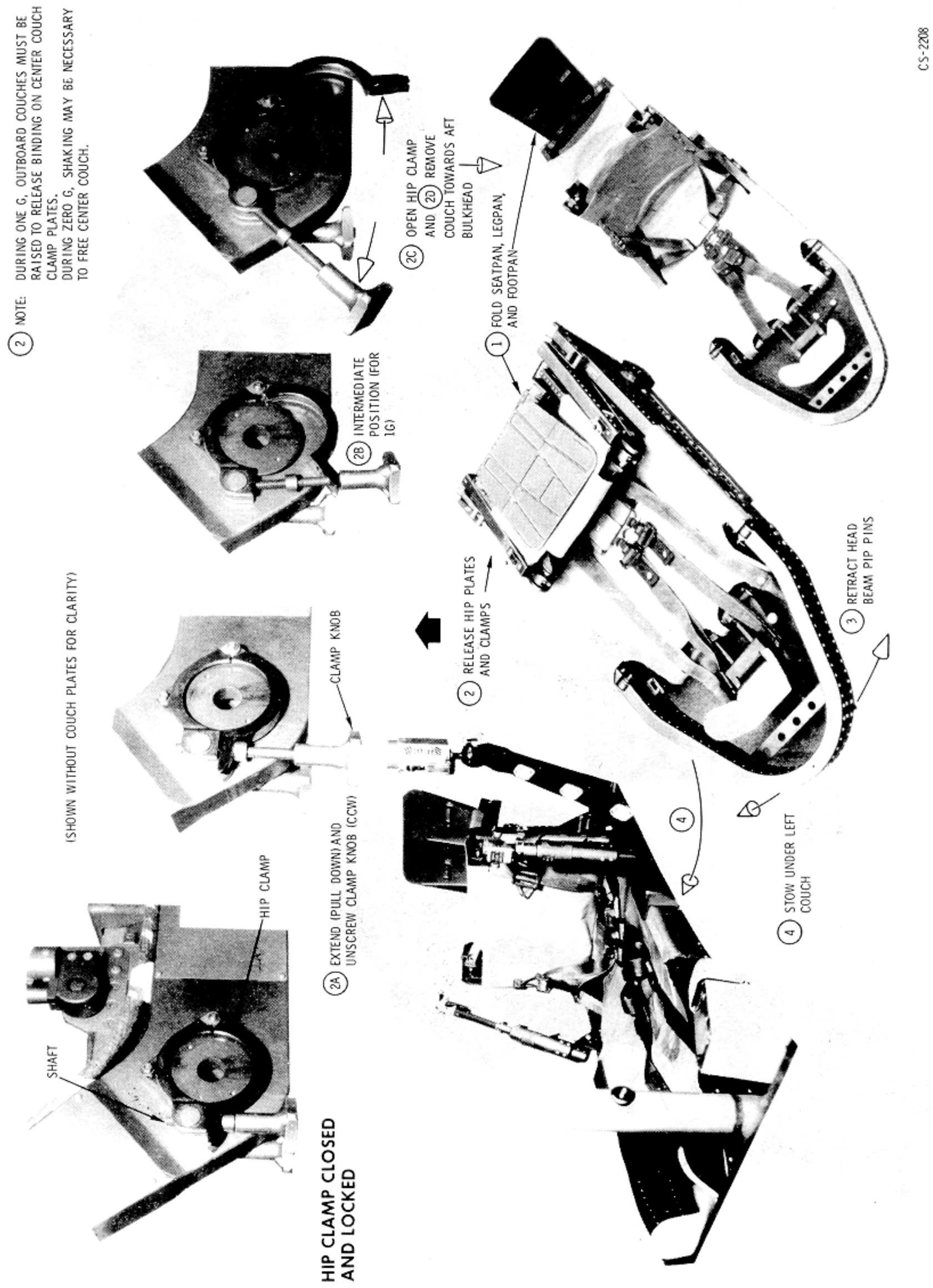

Figure 1-19. Stowing the Center Couch

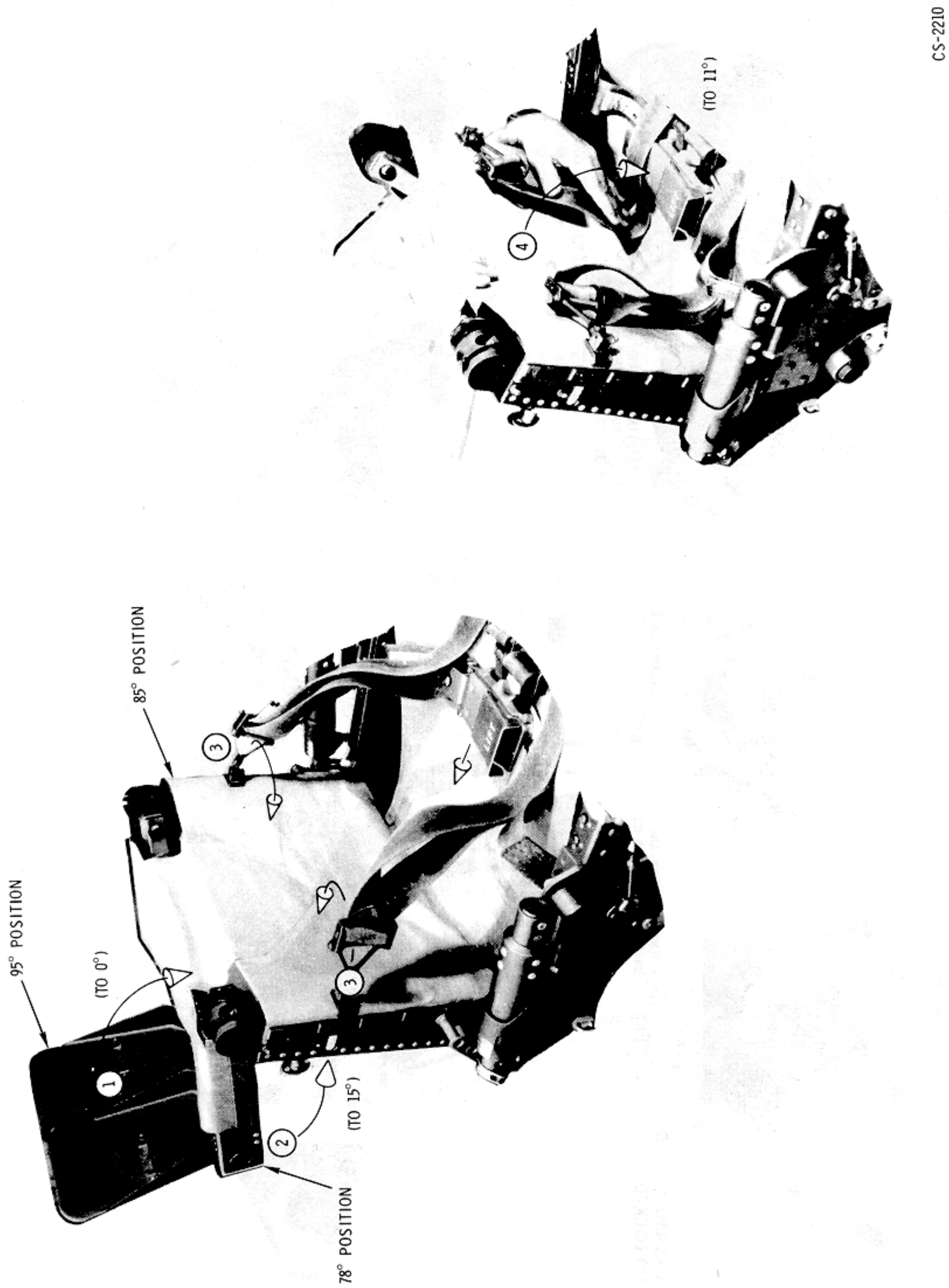

Figure 1-20. Folding the Seatpan

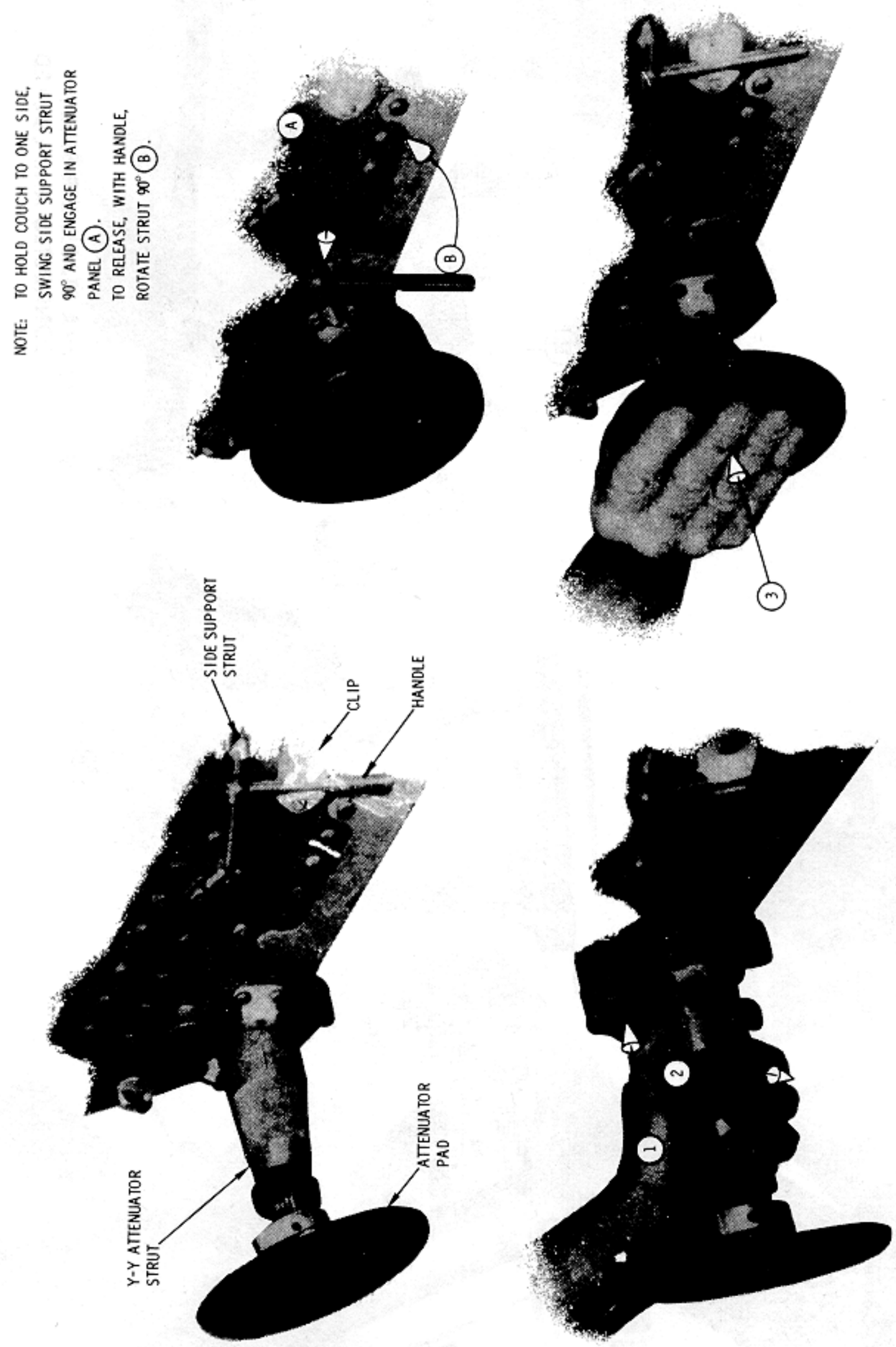

CS-2211

Figure 1-21. Y-Y Strut Retraction

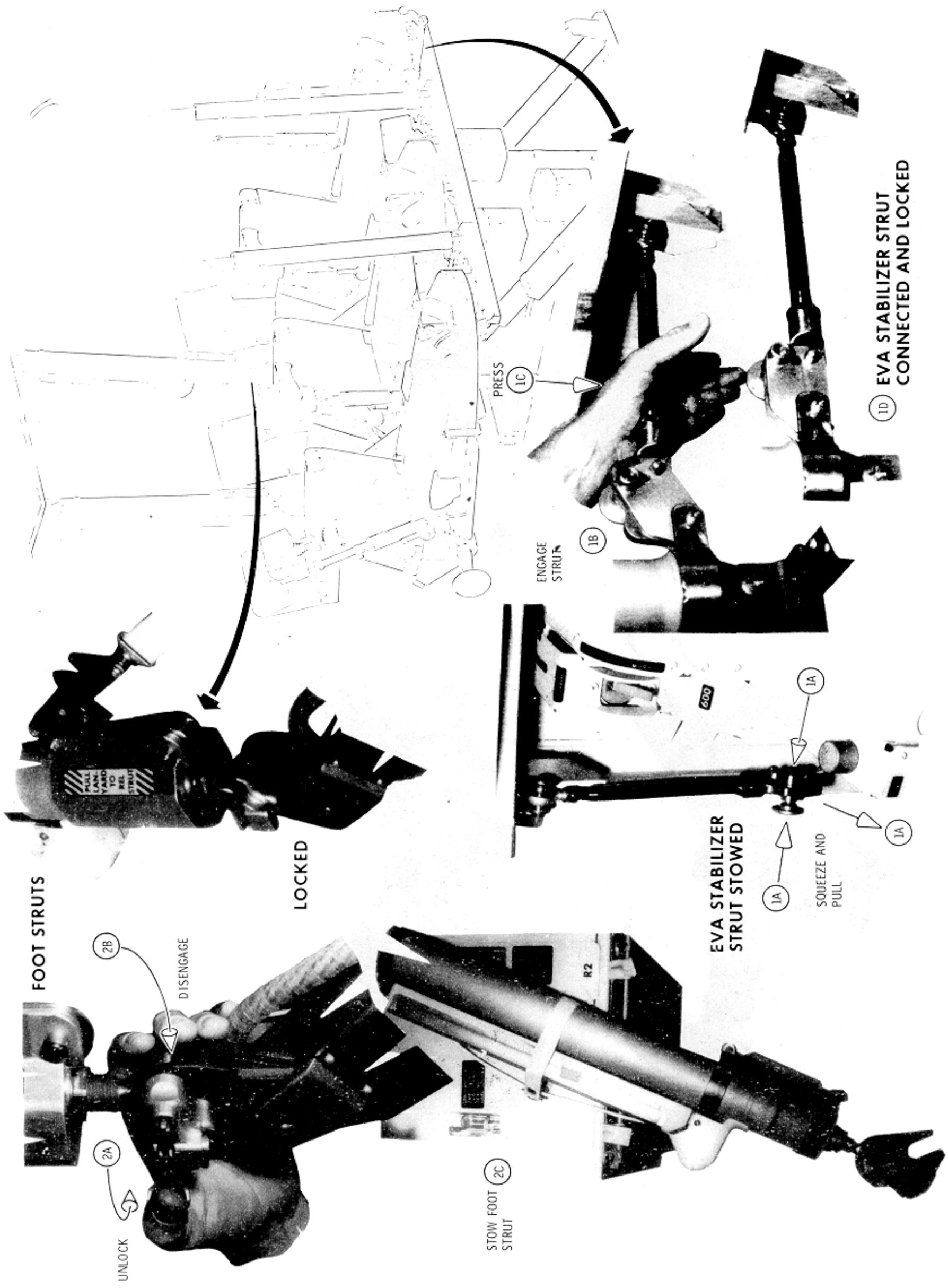

Figure 1-22. Preparing Couch Structure for EVA

1.3.2.6 CM Mechanical Controls.

Mechanical controls are provided in the crew compartment for manual operation of the side access hatch covers, forward access hatch covers, and manual override levers for the ECS cabin pressure relief valve. Tools for emergency opening or securing the hatches and operating ECS manual backup valves are in the toolset pouch in a locker on the aft bulkhead.

1.3.2.6.1 Side Access Hatch.

Side access to the crew compartment is through an outward-opening single-integrated hatch assembly and adapter frame (figure 1-23). The hatch provides for primary structure pressure loads and supports the hatch thermal protection system. It includes a primary flexible thermal seal, hinges, and a latch and linkage mechanism. Provisions for a scientific airlock, window, or closeout adapter, a pressure dump valve, and a GSE cabin purge port are also incorporated. A secondary thermal seal is attached to the heat shield ablator around the hatch opening and bears against the inner structure. The adapter frame, which closes out the area between the inner and outer structure, provides the structural continuity for transmitting primary structure loads around the hatch opening without transmitting the tension or compression loads to the hatch. The inner structure adapter frame contains a single primary pressure seal.

Hatch opening is accomplished by a manually driven mechanism which operates the latch and linkage mechanism. The latch and linkage mechanism provides a hatch lock for pressure loads and for pressure sealing of the crew compartment. (It does not provide shell continuity for hook tension or compression loads.) The door deployment mechanism is driven by a single handle with a ratchet mechanism. The internal lever operation is normal to the hatch with the inboard stroke driving the latches closed while the outboard stroke drives the latches open. The hatch will open 100 degrees minimum to provide clearance for the crewman past the scientific airlock when mounted on the hatch. A counterbalance system is provided to assist in opening the hatch in both normal and emergency conditions and attenuate the opening and closing velocity of the hatch (figure 1-24).

The hatch is normally latched and unlatched manually from the inside by an actuating handle permanently attached to the gear box (figure 1-23). Prior to handle actuation, the two control levers are positioned to the LATCH or UNLATCH positions as shown in view E and G. Both selectors are placed in identical positions when

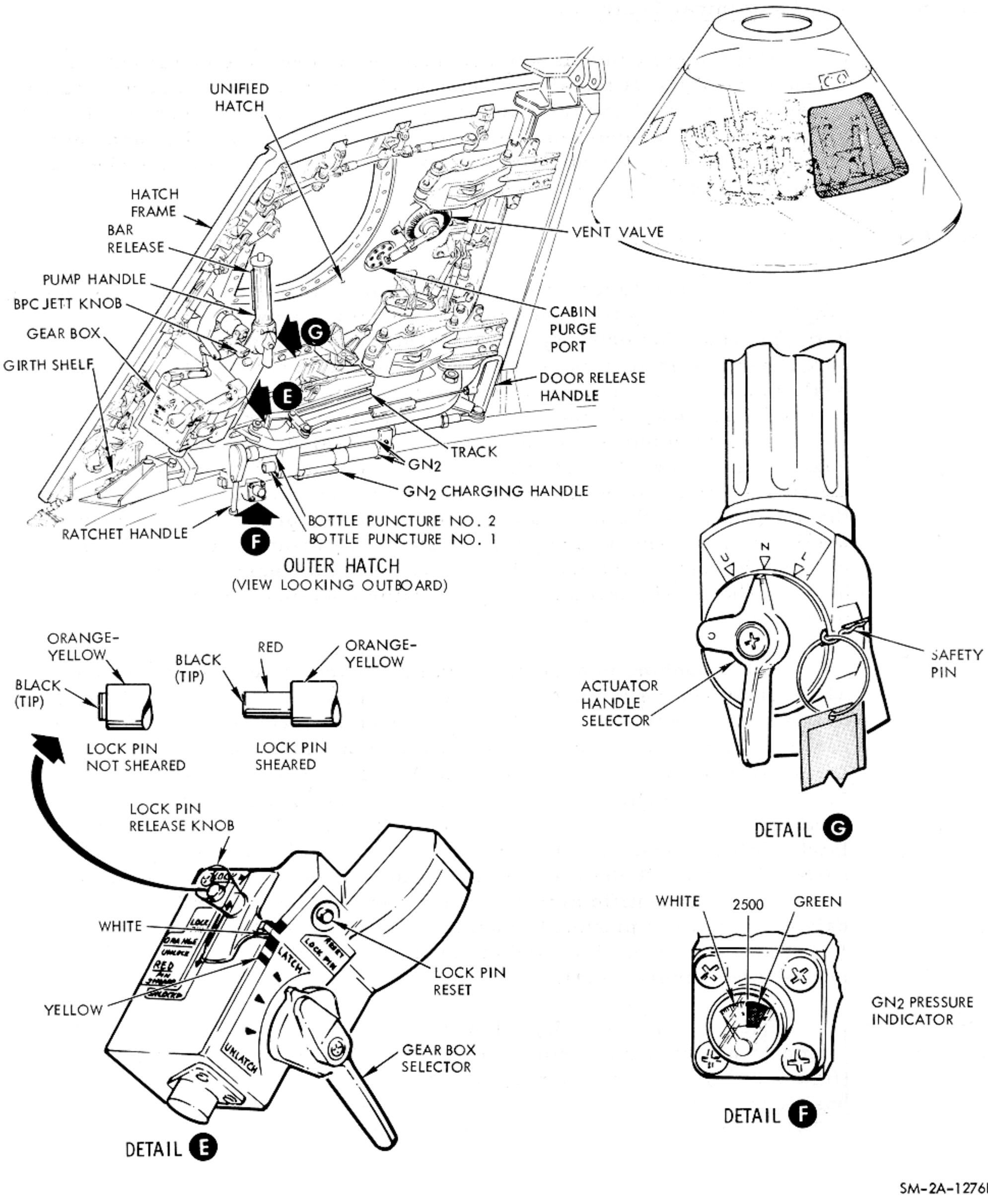

Figure 1-23. CM Side Access Hatch

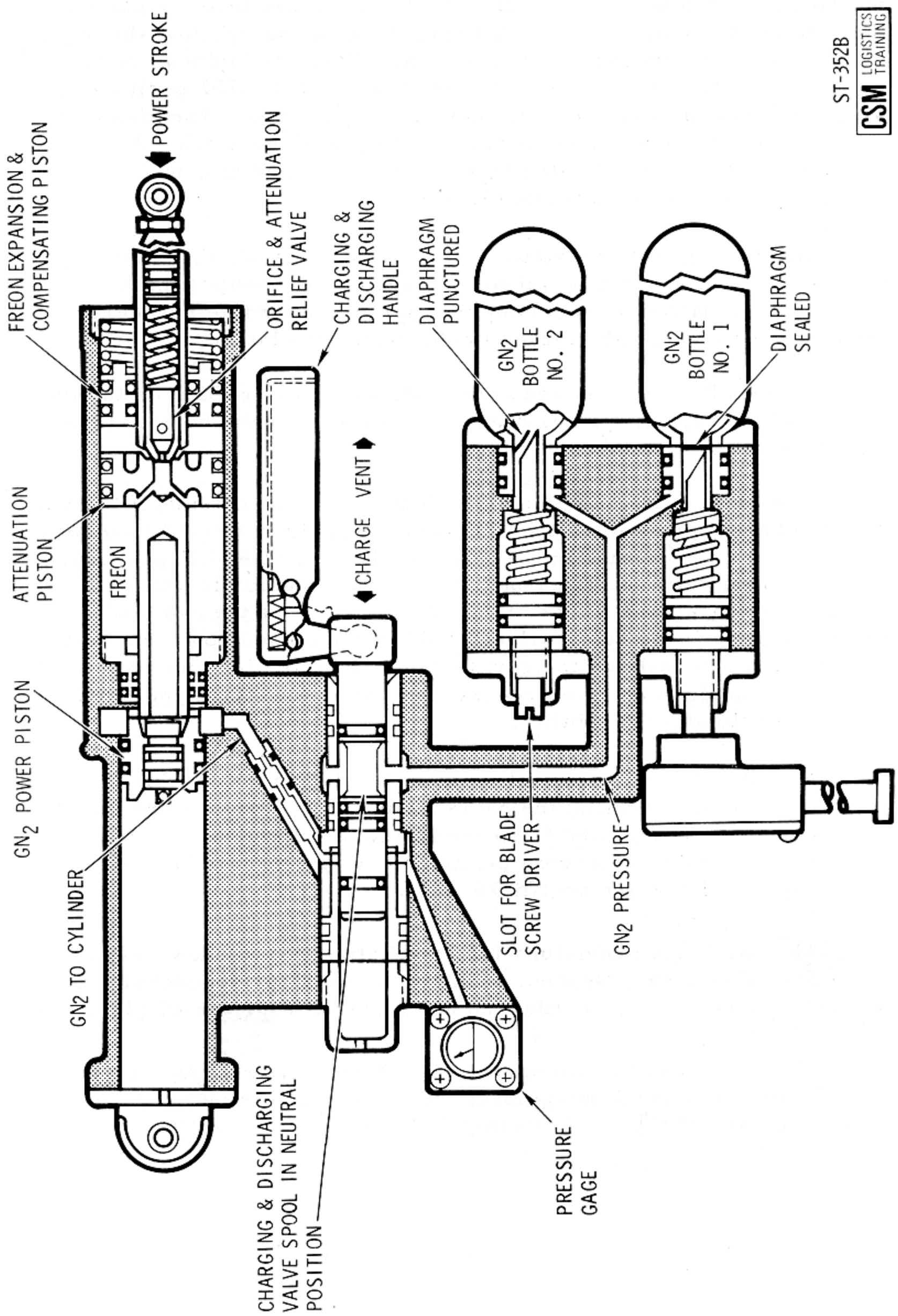

Figure 1-24. CM Hatch Counterbalance Schematic

operating the latches. Next, the shear pin release lever is placed in the UNLOCK position. This will extend the orange-yellow shear pin permitting free rotation of the gear box. When the latches are fully engaged, or the release lever is placed in the LOCKED position, the orange-yellow pin will retract, locking the gear box. The shear pin may be sheared during an emergency opening of the hatch. A sheared condition is indicated by the protruding red pin, within the orange-yellow pin, as indicated in view E.

After the preceding steps have been performed, the handle is unstowed. This is accomplished by gripping the handle (which depresses the trip bar) and pumping approximately five 60-degree strokes. This will fully engage or disengage the latches.

External operations are accomplished by using GSE or the in-flight tool through the penetration on the outside of the hatch. (See figure 1-24A.)

The crew hatch should not be closed from the outside of the CM with the handle control knob in the LATCH position (view G). Always set the pawl control knob in the NEUTRAL or UNLATCH position. Located around the outer periphery are 15 mechanically actuated latches that engage the inner structure adapter. In the event of a linkage jam or if the hatch will not hold in the closed position, auxiliary devices are utilized to provide thermal protection and structural continuity during entry, and render the CM in a water-tight condition for limited flotation capability.

A manually operated vent valve is located in the hatch. The valve is capable of venting the cabin from 5 to 0.1 psig in one minute. The valve may be operated from the inside or outside by a suited crewman. A tool interface on the hatch exterior is provided for pre-flight, space flight, and postflight operation.

The hatch has provisions for installation of a window assembly or scientific airlock. Depending on the mission, or spacecraft, the window or airlock may be attached using the appropriate adapter.

The hatch mechanism operates the boost protective cover (BPC) mechanism for normal and emergency modes, and is sequenced to ensure release of the BPC hatch prior to unlocking the CM hatch.

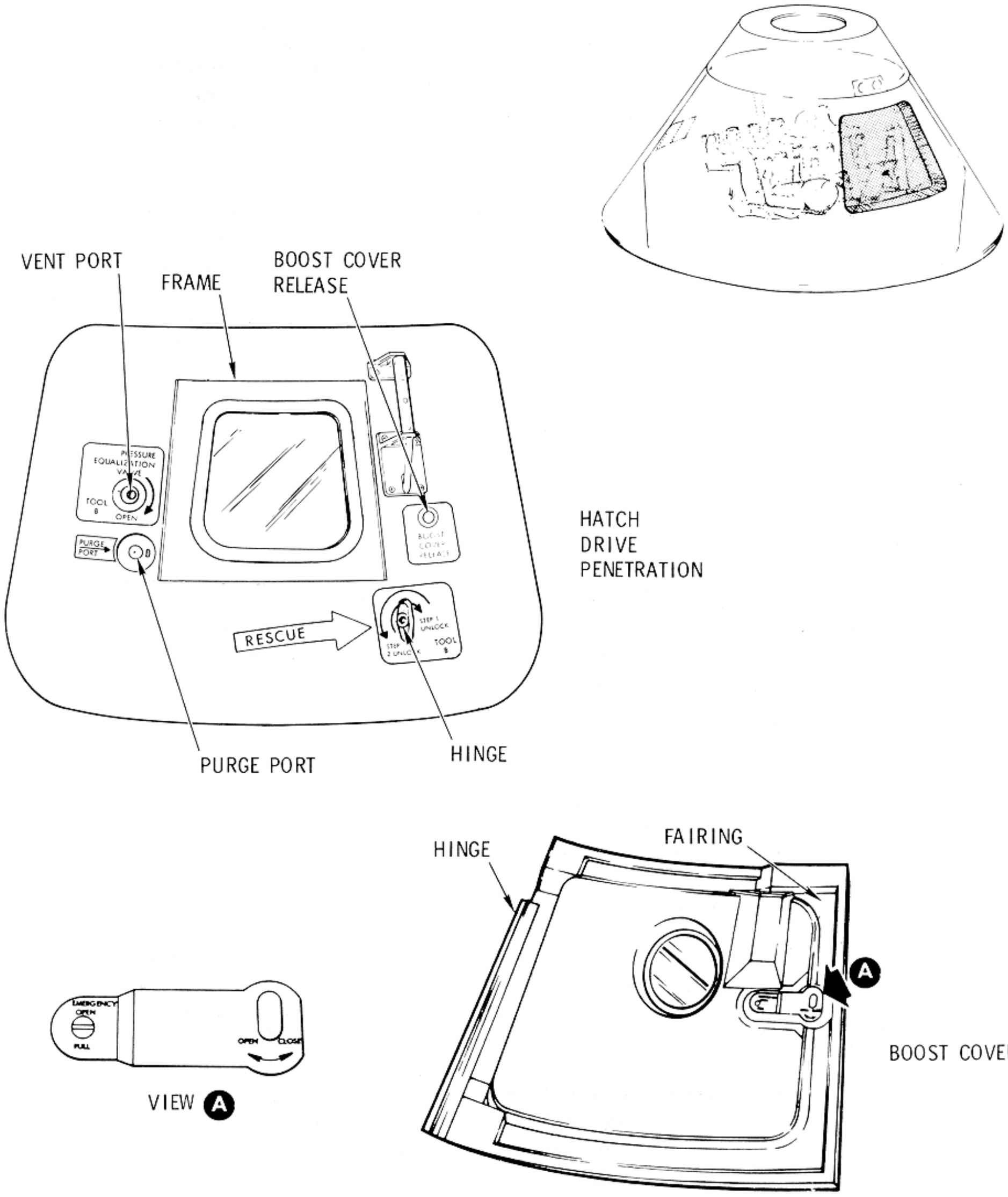

Figure 1-24A. Exterior Hatch Views

The BPC is hinged and retained with a tethering device when the combined unified and BPC hatch are opened. A permanent release handle (D-ring) is utilized on the outside of the BPC to manually unlatch the drive mechanism (figure 1-24A).

The counterbalance assembly is a stored energy device capable of opening the unlatched CM and BPC hatches in a one g environment. It is mounted adjacent to the CM hatch and connected to the hatch deployment mechanism. Figure 1-24 illustrates schematically the mechanization of the counterbalance assembly. To pressurize the system for normal pad operation, the number one bottle diaphragm is punctured utilizing a blade screwdriver. The charging and discharging handle is actuated and the gas bleeds into the cylinder. The high-pressure gas provides an opening force that will open the hatch when the latches are released. The cylinder must be vented after launch to adjust the system for zero g operation.

The counterbalance maintains an outward force on the hatch to balance the weight, overcome seal drag, and assist in opening the hatch when the latches are actuated. The ground crew can easily close the hatch by pushing it closed and recompressing the gas (nitrogen). In this manner the nitrogen is not vented. Additional nitrogen is introduced only if the cylinder pressure has decayed. A pressure indicator permits monitoring the system pressure.

The number two bottle may be punctured after landing by ratcheting the ratchet handle until the diaphragm is pierced. This bottle should not be punctured until ready to open the hatch.

1.3.2.6.2 Forward Access Hatch (Figure 1-25).

The spacecraft utilizes a combined tunnel (forward) hatch. This single hatch serves as a pressure and thermal hatch. The hatch latching mechanism consists of six separate jointed latches whose linkage is driven by a pump handle from within the crew compartment. The latch operation from the inside is a 60-degree compression stroke selected by rotating the handle to the latch or unlatch position. A sealed drive is provided through the hatch, making the mechanism operable from the outside. A pressure equalization valve is provided to equalize pressure in the tunnel and LM prior to hatch removal.

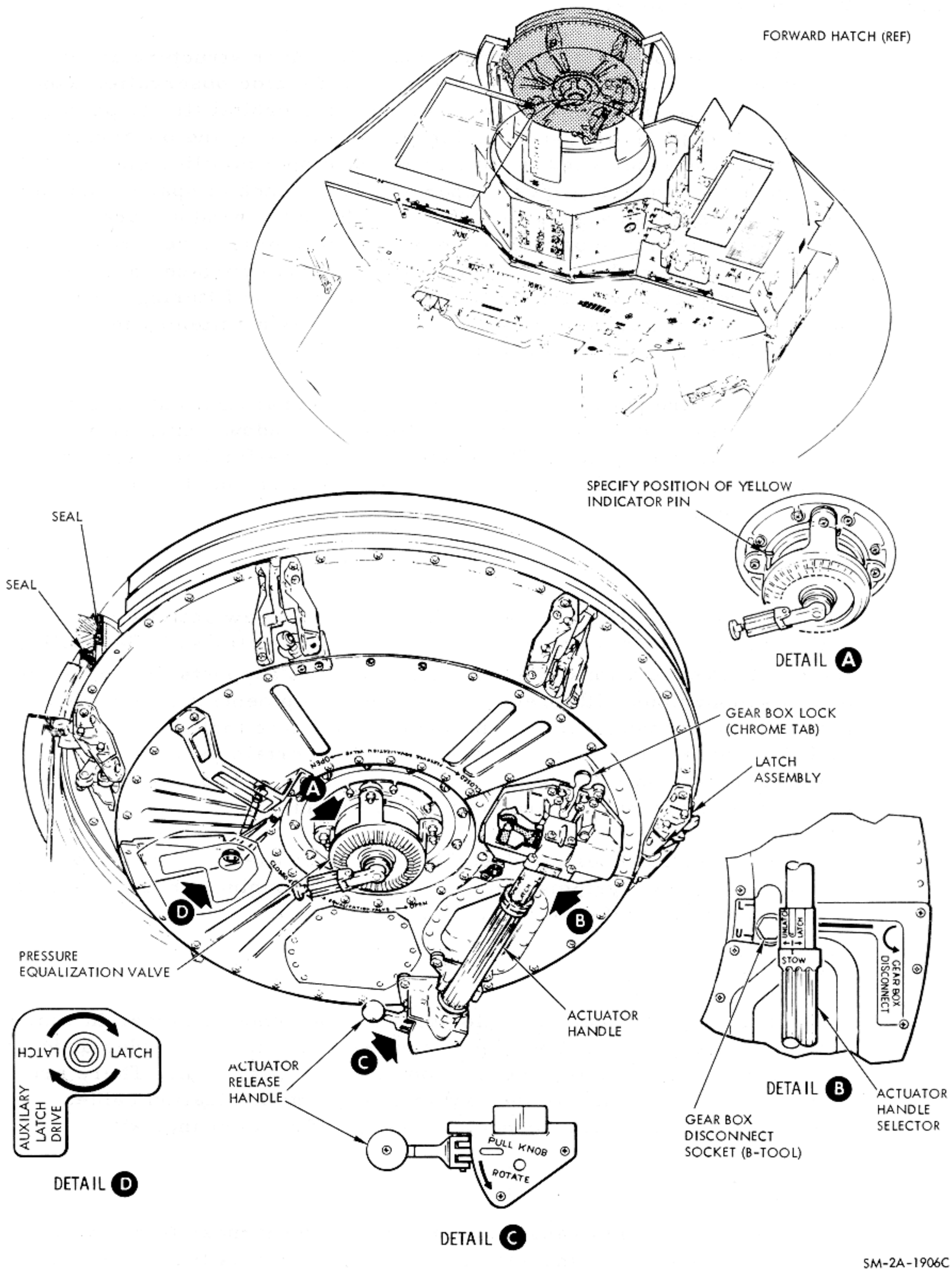

Figure 1-25. CM Forward Access Hatch

1.3.2.6.3 Windows and Shades.

Five windows are provided through the inner structure and heat shield of the CM: two forward viewing and two side observation windows and a hatch window. (See figure 1-5.) During orbital flight, photographs of external objects will be taken through the viewing and observation windows. The inner windows are made of tempered silica glass with 0.25-inch-thick double panes, separated by 0.1 inch of space, and have a softening temperature point of 2000°F. The outer windows are made of amorphous-fused silicon with a single 0.7-inch-thick pane. Each pane contains an anti-reflecting coating on the external surface, and has a blue-red reflective coating on the inner surface for filtering out most infrared and all ultraviolet rays. The glass has a softening temperature point of 2800°F, and a melting point of 3110°F.

Shades are provided for controlling external light entering the CM. These shades, individually designed for each window configuration, are made of aluminum sheet. The shades are opaque for zero-light transmittal, have a nonreflective inner surface, and are held in place by "wing" levers.

1.3.2.7 Crew Stations.

The place of crew activity, the objects of crew activities, and crew activity requirements are referred to as "crew stations." Generally, the term "crew stations" includes anything that supports the flight crew and is synonymous with crew systems and equipment; thus, the terms are generally interchangeable. A major distinction is that crew stations include controls and displays requirements, certain aspects of the environmental control system, and crew couches, whereas in crew systems and equipment they are not usually included.

This section does not describe crew activities but briefly relates the scope of crew systems and equipment by grouping. For a comprehensive description, refer to section 2.12.

1.3.2.7.1 Spacesuit.

The spacesuit acts as a flexible environmental chamber in which the crewman is supplied a flow of pressurized oxygen. It includes undergarments, ventilation ducts, and the communication system. There are many accessories such as the oxygen hose, communication cables, couplings, screen caps, connector plugs, and maintenance kits.

1.3.2.7.2 Restraints.

Crew restraints range from the restraint harness to restrain the crew in the couches to the zero g restraints, such as the sleep station

restraints, hand-holds, and EVA guards. Equipment restraints include a number of snaps and Velcro patches on the crew compartment structure and utility straps which clasp to the snaps.

1.3.2.7.3 Internal Sighting Aids.

Internal sighting aids are objects that assist the crew in controlling light or sighting. These include shades, mirrors, crewman optical alignment sight, lunar module active docking target, and window markings.

1.3.2.7.4 External Illumination Aids.

The external illumination aids are lights or objects on the exterior of the Apollo spacecraft. They include the docking spotlight, running lights, radio-luminescent discs, the EVA floodlight, and rendezvous beacon.

1.3.2.7.5 Mission Operational Aids.

Objects or devices that assist the crew in the mission and the operation of the spacecraft are operational aids. The aids are the flight-data file, tool set, cameras, and miscellaneous accessories.

1.3.2.7.6 Crew Life Support.

Items included are drinking and food reconstitution water devices, food, waste management, and personal hygiene. Waste management consists of equipment for collecting, disinfecting, and storing the feces, and expelling urine overboard.

1.3.2.7.7 Medical Equipment.

The medical requirements are filled by the bioinstrumentation harness that transmits the respiration and pulse of the crew to the communications system, and a medical kit that contains medication for contemplated contingencies.

1.3.2.7.8 Radiation Monitoring Equipment.

The crew wears passive and active dosimeters for recording dosages. For measuring the radiation present in the crew compartment, a radiation survey meter and a Van Allen Belt dosimeter are stowed.

1.3.2.7.9 Postlanding Recovery Aids.

Upon landing, the crew will deploy the dye marker for daytime signaling, or turn on the recovery beacon for night signaling, connect cloth ducts for air, deploy a grappling hook to snag a sea anchor line, and, if needed, use a seawater pump to acquire sea water for desalinization. In the event the crew would be forced to abandon the command module, the survival kit would be used for flotation and signaling.

UPPER EQUIPMENT BAY FORWARD (UEBF)

1. SCIENTIFIC/ELECT DISCONNECT PANEL 227
2. VAN ALLEN BELT DOSIMETER
3. MDC PANEL 16
4. MDC PANEL 15
5. FLOOD LIGHT FIXTURE
6. UNIFIED HATCH
7. ORDEAL

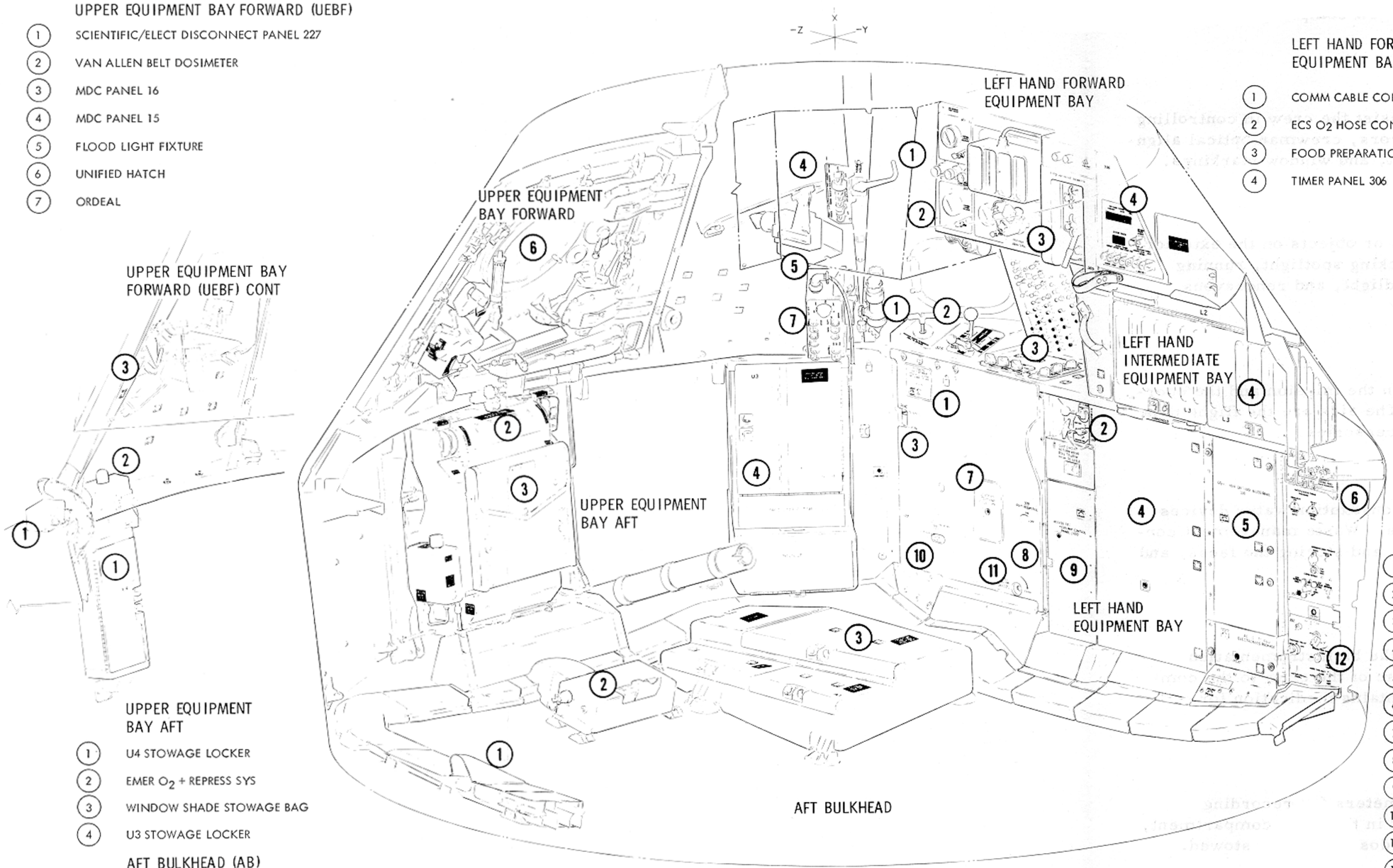

LEFT HAND FORWARD EQUIPMENT BAY (LHFEB)

1. COMM CABLE CONNECTORS
2. ECS O_2 HOSE CONNECTORS
3. FOOD PREPARATION WATER UNIT
4. TIMER PANEL 306

LEFT HAND INTERMEDIATE EQUIPMENT BAY (LHEB)

1. CREW OPTICAL ALIGNMENT SIGHT
2. CABIN PRESS RELIEF CONTROL PANEL 325
3. ECS O_2 & GLYCOL CONTROL PANEL 326
4. L3 STOWAGE COMPARTMENT

LEFT HAND EQUIPMENT BAY (LHEB)

1. O_2 SURGE TANK PRESS RELIEF
2. O_2 DEMAND REG VALVE PANEL 380
3. PLVC CONTROL PANEL 376
4. LEFT HAND ATTENUATOR PANELS
5. ECS FILTER ACCESS PANEL 350
6. OXYGEN CONTROL PANEL 351
7. SEAWATER PLUG ACCESS PANEL
8. W/G ACCUM FILL CONTROL PANEL 379
9. COOLANT CONTROL PANEL 382
10. GLYCOL TO RADIATOR CONTROL PANEL 377
11. W/G ACCUM ISOLATION CONTROL PANEL 378
12. WATER CONTROL PANEL 352

UPPER EQUIPMENT BAY AFT

1. U4 STOWAGE LOCKER
2. EMER O_2 + REPRESS SYS
3. WINDOW SHADE STOWAGE BAG
4. U3 STOWAGE LOCKER

AFT BULKHEAD (AB)

1. ELECTRICAL CABLEWAY
2. ROTATIONAL HAND CONTROLLER JUNCTION BOX
3. A1 STOWAGE LOCKER

VIEW LOOKING AFT & OUTBOARD
AFT BLKHD, UPPER & LH EQUIP BAYS

Figure 1-26. CM Internal Configuration (Sheet 1 of 2)

LOWER EQUIPMENT BAY (LEB)

1. AUXILIARY TEST PANEL 101
2. OPTICS STOWAGE COMPARTMENT
3. LIGHTING CONTROL PANEL 101
4. OPTICS PANEL 121
5. LEB DISPLAY KEYBOARD PANEL 140
6. G&N CONTROL PANEL 122
7. B1 STOWAGE COMPARTMENT (FOOD)
8. TRANSLATION CONTROL LEB MOUNT
9. ROTATIONAL CONTROL LEB MOUNT
10. B2 STOWAGE COMPARTMENT (MED KIT)
11. B3 STOWAGE COMPARTMENT (CAMERA EQUIP)
12. B4 STOWAGE COMPARTMENT (CHLORINE EQUIP)
13. B5 STOWAGE COMPARTMENT (CO_2 ABSORBERS)
14. B6 STOWAGE COMPARTMENT (CO_2 ABSORBERS)
15. B7 STOWAGE COMPARTMENT
16. ACCESS PANEL FOR VHF TRIPLEXER
17. B8 STOWAGE COMPARTMENT (CAMERA EQUIP)

AFT BULKHEAD (AB)

1. FIRE EXTINGUISHER
2. A3 STOWAGE LOCKER
3. A4 STOWAGE LOCKER
4. A5 STOWAGE LOCKER
5. A6 STOWAGE LOCKER
6. A7 STOWAGE LOCKER
7. ELECTRICAL CABLEWAY
8. A8 STOWAGE LOCKER

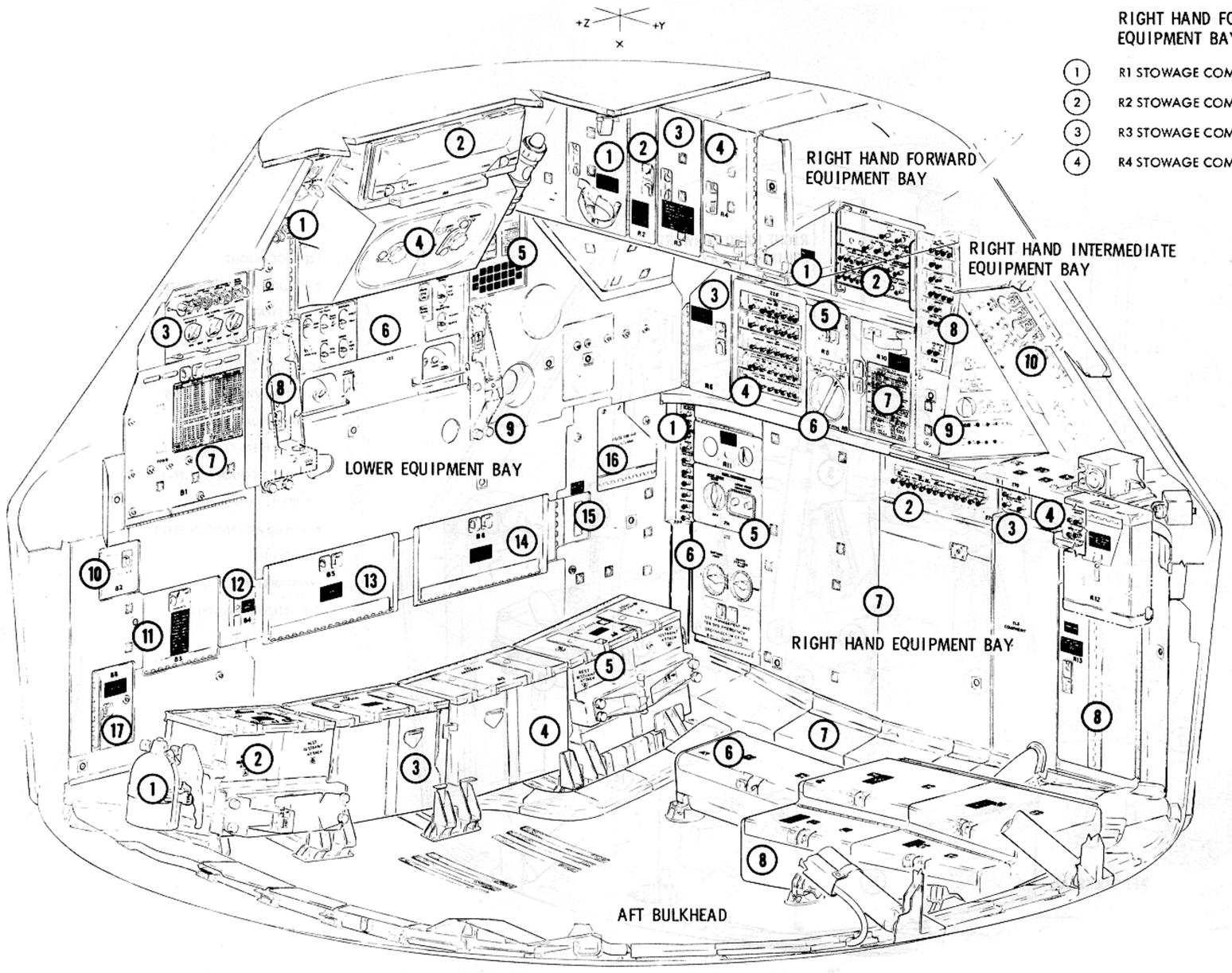

VIEW-LOOKING AFT & OUTBOARD
AFT BLKHD, L.E.B. & RH EQUIP BAY

RIGHT HAND FORWARD EQUIPMENT BAY (RHFEB)

1. R1 STOWAGE COMPARTMENT
2. R2 STOWAGE COMPARTMENT
3. R3 STOWAGE COMPARTMENT
4. R4 STOWAGE COMPARTMENT

RIGHT HAND INTERMEDIATE EQUIPMENT BAY (RHIEB)

1. R5 STOWAGE COMPARTMENT
2. AUX CIRCUIT BKR PANEL "A" 225
3. R6 STOWAGE COMPARTMENT
4. AUX CIRCUIT BKR PANEL "B" 226
5. R8 STOWAGE COMPARTMENT
6. R9 STOWAGE COMPARTMENT (WMS)
7. R10 STOWAGE COMPARTMENT
8. CIRCUIT BKR PANEL 229
9. MAIN DISPLAY CONSOLE 4
10. MAIN DISPLAY CONSOLE 5

RIGHT HAND EQUIPMENT BAY (RHEB)

1. BATTERY CIRCUIT BKR PANEL 250
2. POWER CIRCUIT BKR PANEL 275
3. POWER CIRCUIT BKR PANEL 276
4. UPRIGHTING SYS PANEL 278
5. WASTE MGMT SYS PANEL 251
6. BATTERY VENT PANEL 252
7. RIGHT ANTENNUATOR PANELS
8. R13 STOWAGE COMPARTMENT

SM-2A-2032

Figure 1-26. CM Internal Configuration (Sheet 2 of 2)

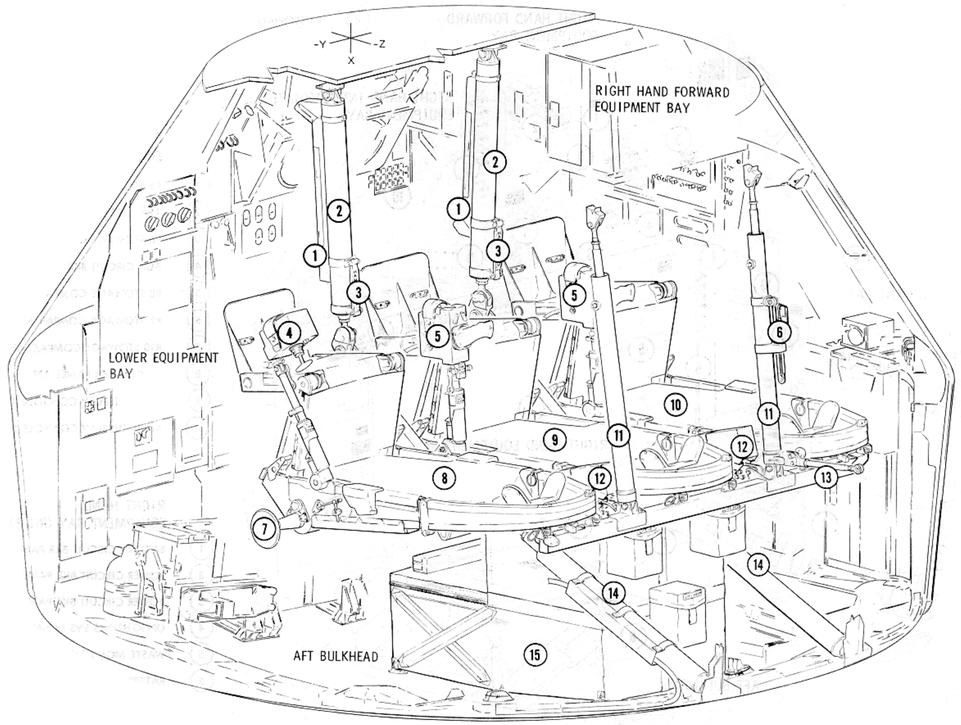

VIEW-LOOKING AFT & OUTB'D
FOLDABLE CREW COUCHES

1. LEB FLOODLIGHT
2. X-X FOOT ATTENUATOR STRUT
3. HAND STRAP
4. TRANSLATION CONTROL
5. ROTATION CONTROL
6. INTERNAL VIEWING MIRROR
7. Y-Y ATTENUATOR STRUT
8. COMMANDERS COUCH (LEFT)
9. CM PILOTS COUCH (CENTER)
10. LM PILOTS COUCH (RIGHT)
11. X-X HEAD ATTENUATOR STRUT
12. FLOODLIGHT
13. EVA STABILIZER STRUT
14. Z-Z ATTENUATOR STRUT
15. L SHAPED PGA BAGS

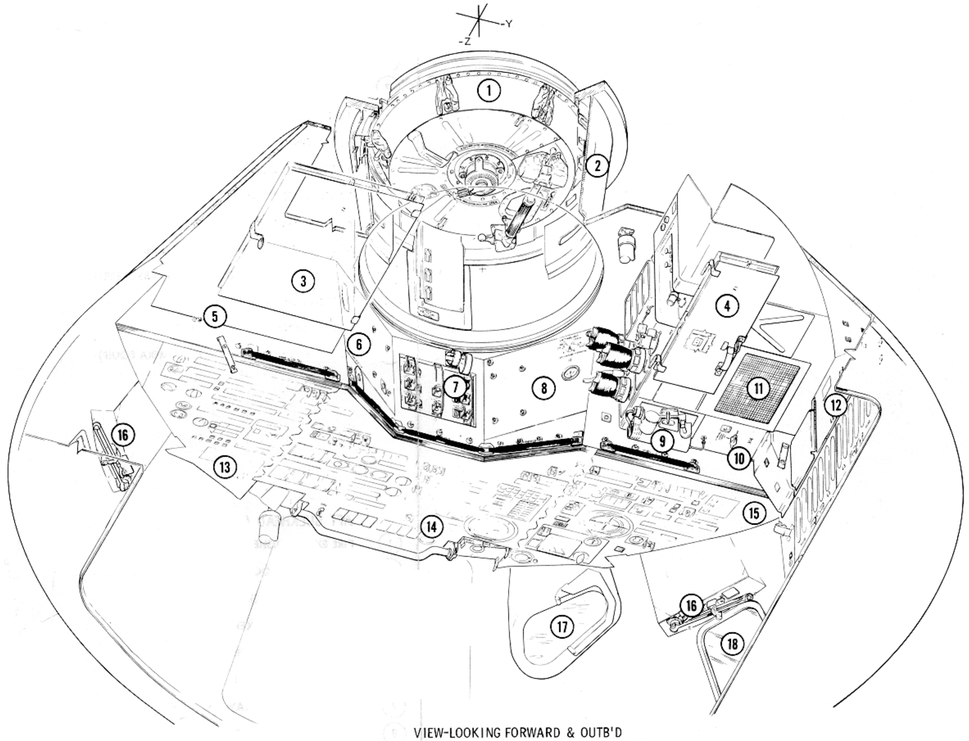

VIEW-LOOKING FORWARD & OUTB'D
COMBINED FWD PRESSURE HATCH, MDC CLOSEOUT &
LH FWD EQUIPMENT BAY

1. FWD PRESSURE HATCH (COMBINED)
2. TUNNEL
3. F1 TEMPORARY STOWAGE COMPARTMENT
4. F2 TEMPORARY STOWAGE COMPARTMENT
5. TV CAMERA RECEPTACLE
6. TV CAMERA MOUNT
7. AUDIO CONTROL PANEL 10
8. TUN/LM PRESSURIZATION PANEL 12
9. WATER METERING DEVICE
10. DRINKING WATER SUPPLY PANEL 304
11. ECS RECIRCULATION FAN INTAKE
12. L2 STOWAGE COMPARTMENT
13. MAIN DISPLAY CONSOLE 3
14. MAIN DISPLAY CONSOLE 2
15. MAIN DISPLAY CONSOLE 1
16. INTERNAL VIEWING MIRROR
17. LEFT FORWARD VIEWING WINDOW
18. LEFT SIDE VIEWING WINDOW

SM-2A-2033

Figure 1-27. CM Interior, MDC and Couches

1.3.2.7.10 Stowage and Internal Configuration.

In the crew compartment, numerous items of equipment are stowed in lockers or compartments designed to withstand the landing impact. The interior configuration of the crew compartment is shown in figures 1-26 and 1-27. The illustrations also show the equipment bays and spacecraft axes.

1.3.3 SERVICE MODULE (Figure 1-28)

The service module is a cylindrical structure formed by 1-inch-thick aluminum honeycomb panels. Radial beams, from milled aluminum alloy plates, separate the structure interior into six unequal sectors around a circular center section. Equipment contained within the service

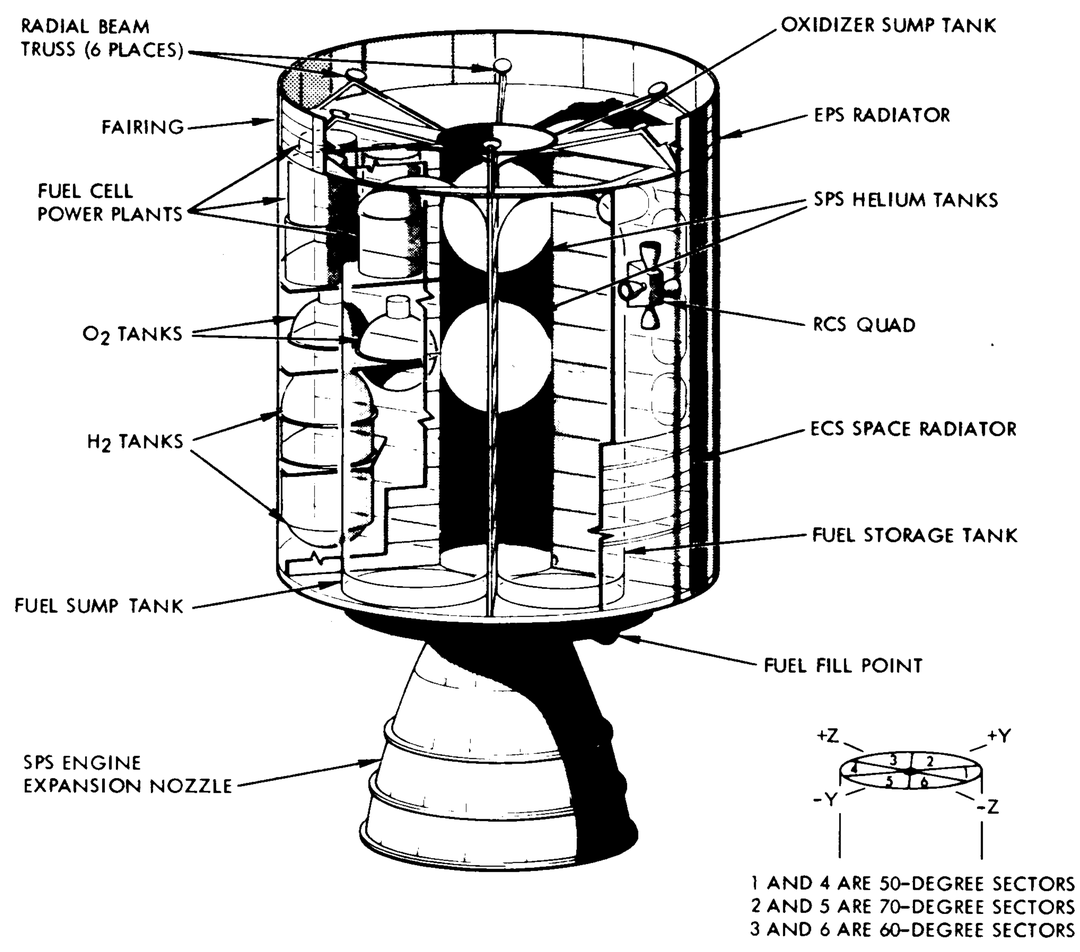

SERVICE MODULE ITEMS

Sector I
- Empty NASA equipment

Sector II
- Environmental system space radiator
- Service propulsion system
- Reaction control system package (+Y-axis)
- Service propulsion system oxidizer sump tank

Sector III
- Service propulsion system
- Reaction control system package (+Z-axis)
- Environmental system space radiator
- Service propulsion system oxidizer storage tank

Sector IV
- Fuel cell power plant (three)
- Helium servicing panel
- Super-critical oxygen tank (two)
- Super-critical hydrogen tank (two)
- Reaction control system control unit
- Electrical power system power control relay box
- Service module jettison controller sequencer (two)

Sector V
- Environmental control system space radiator
- Service propulsion system fuel sump tank
- Reaction control system package (-Y axis)

Sector VI
- Environmental control system space radiator
- Reaction control system package (-Z axis)
- Service propulsion system fuel storage tank

Center Section
- Service propulsion system helium tank (two)
- Service propulsion system engine

Fairing
- Electrical power system space radiator's (eight)

SM-2A-1278

Figure 1-28. Service Module

module is accessible through maintenance doors located around the exterior surface of the module. Specific items, such as propulsion systems (SPS and RCS) fuel cells, and most of the SC onboard consumables (and storage tanks) contained in the SM compartments, are listed in figure 1-28. The service module is 12 feet 11 inches long (high) and 12 feet 10 inches in diameter.

Radial beam trusses on the forward portion of the SM structure provide a means for securing the CM to the SM. Alternate beams, one, three, and five, have compression pads for supporting the CM. Beams two, four, and six, have shear-compression pads and tension ties. A flat center section in each tension tie incorporates redundant explosive charges for SM-CM separation. These beams and separation devices are enclosed within a fairing (26 inches high and 13 feet in diameter) between the CM and SM.

1.3.4 SPACECRAFT LM ADAPTER.

The spacecraft LM adapter (SLA) (figure 1-29) is a large truncated cone which connects the CSM and S-IVB on the launch vehicle. It houses the lunar module (LM), the nozzle of the service propulsion system, and the high-gain antenna in the stowed position. The adapter, constructed of eight 2-inch-thick aluminum panels is 154 inches in diameter at the forward end (CM interface) and 260 inches at the aft end. Separation of the CSM from the SLA is accomplished by means of explosive charges which disengage the four SLA forward panels from the aft portion. The individual panels are restrained to the aft SLA by hinges and accelerated in rotation by pyrotechnic-actuated thrusters. When reaching an angle of 45 degrees measured from the vehicles X-axis, spring thrusters (two per panel) jettison the panels. The panel jettison velocity and direction of travel is such as to minimize the possibility of recontact with the spacecraft or launch vehicle.

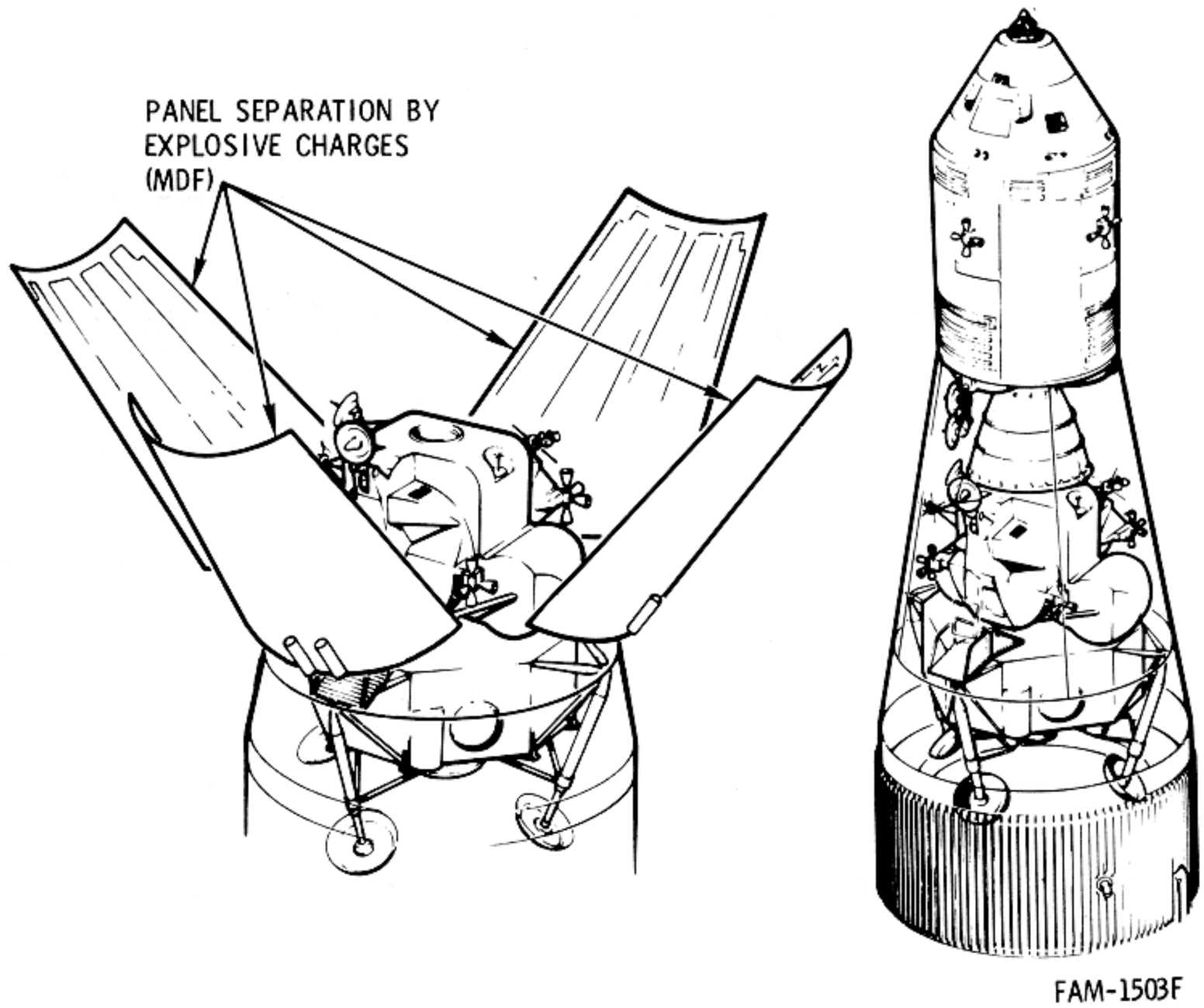

Figure 1-29. Spacecraft LM Adapter

SECTION 2

SYSTEMS DATA

INTRODUCTION.

Systems data include description of operations, component description and design data, and operational limitations and restrictions. Subsection 2.1 describes the overall spacecraft navigation, guidance, and control requirements and the resultant systems interface. Subsections 2.2 through 2.10 present data grouped by spacecraft systems, arranged in the following order: guidance and navigation, stabilization and control, service propulsion, reaction control, electrical power, environmental control, telecommunications, sequential, and caution and warnings. Subsection 2.11 deals with miscellaneous systems data. Subsection 2.12 deals with crew personal equipment. Subsection 2.13 deals with docking and crew transfer.

SECTION 2

SUBSECTION 2.1

GUIDANCE AND CONTROL

2.1.1 GUIDANCE AND CONTROL SYSTEMS INTERFACE.

The Apollo guidance and control functions are performed by the primary guidance, navigation, and control system (PGNCS), and stabilization and control system (SCS). The PGNCS and SCS systems contain rotational and translational attitude and rate sensors which provide discrete input information to control electronics which, in turn, integrate and condition the information into control commands to the spacecraft propulsion systems. Spacecraft attitude control is provided by commands to the reaction control system (RCS). Major velocity changes are provided by commands to the service propulsion system (SPS). Guidance and control provides the following basic functions:

- Attitude reference
- Attitude control
- Thrust and thrust vector control.

The basic guidance and control functions may be performed automatically, with primary control furnished by the command module computer (CMC) or manually, with primary control furnished by the flight crew. The subsequent paragraphs provide a general description of the basic functions.

2.1.2 ATTITUDE REFERENCE.

The attitude reference function (figure 2.1-1) provides display of the spacecraft attitude with reference to an established inertial reference. The display is provided by two flight director attitude indicators (FDAI) located on the main display console, panels 1 and 2. The displayed information consists of total attitude, attitude errors, and angular rates. The total attitude is displayed by the FDAI ball. Attitude errors are displayed by three needles across scales on the top, right, and bottom of the apparent periphery of the ball. Angular rates are displayed by needles across the top right, and bottom of the FDAI face.

Total attitude information is derived from the IMU stable platform or the gyro display coupler (GDC). The IMU provides total attitude by maintaining a gimbaled, gyro-stabilized platform to an inertial reference orientation. The GDC provides total attitude by updating attitude information with angular rate inputs from gyro assembly 1 or 2. Both the IMU and the GDC furnish total attitude data to the command module computer (CMC) as well as to the FDAIs.

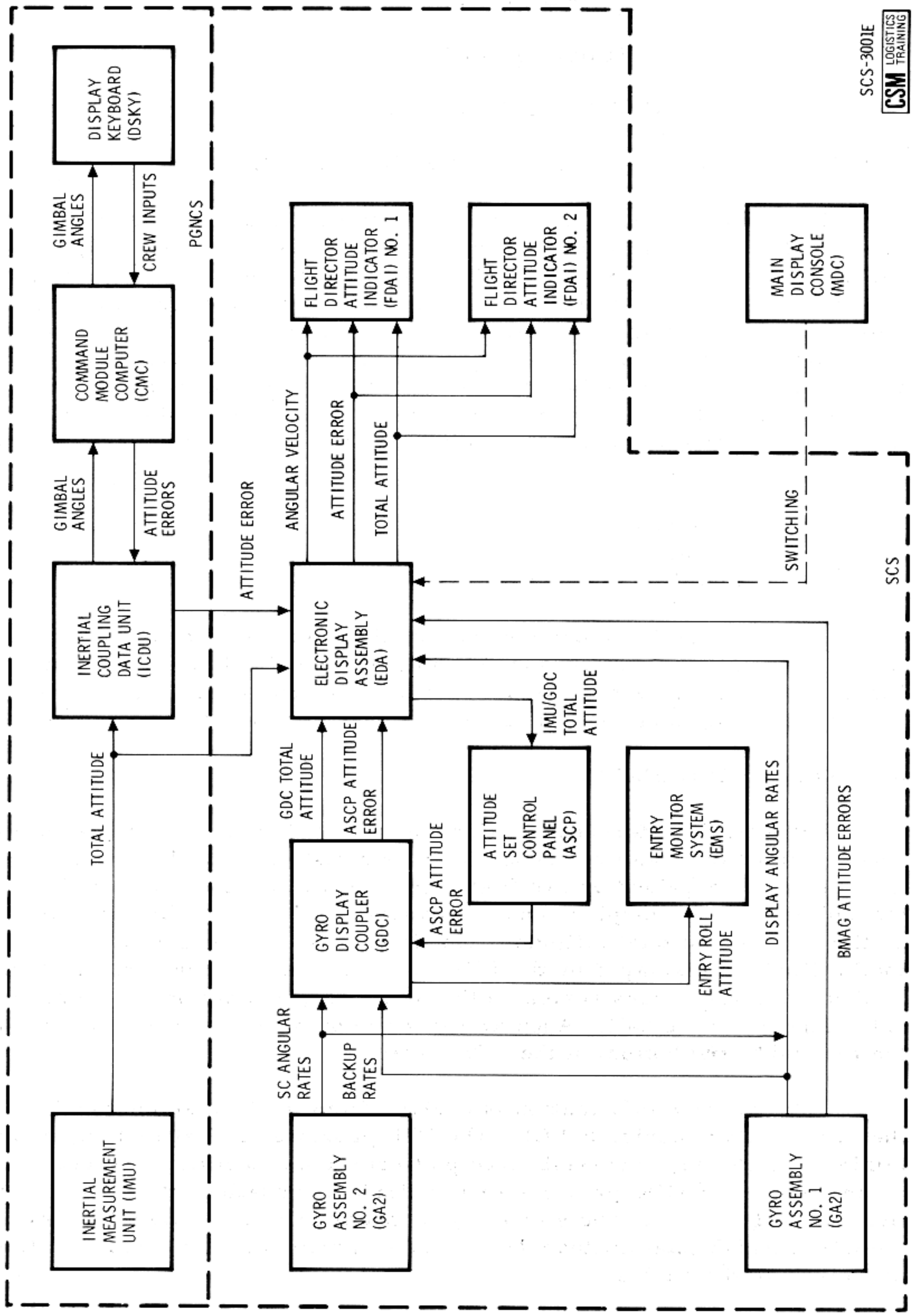

Figure 2.1-1. G&C Attitude Reference

Attitude error information is derived from three sources. The first source is from the IMU through the coupling data unit (CDU) which compares IMU gimbal angles with CMC commanded angles set into the CDU. Any angular difference between the IMU gimbals and the CDU angles is sent to the FDAI for display on the attitude error needles. The second source is from gyro assembly 1 which contains three (one for each of the X, Y, and Z axes) single-degree-of-freedom attitude gyros. Any spacecraft rotation about an axis will offset the case of a gyro from the float. This rotation is sensed as a displacement off null, and a signal is picked off which is representative of the magnitude and direction of rotation. This signal is sent to the FDAI for display on the attitude error needles. The third source is from the GDC which develops attitude errors by comparing angular rate inputs from gyro assembly 1 or 2 with an internally stored orientation. This data is sent to the FDAI for display on the attitude error needles.

Angular rates are derived from either gyro assembly 1 or 2. Normally, the No. 2 assembly is used; however, gyro assembly 1 may be switched to a backup rate mode if desired. For developing rate information, the gyros are torqued to null when displaced; thus, they will produce an output only when the spacecraft is being rotated. The output signals are sent to the FDAI for display on the rate needles and to the GDC to enable updating of the spacecraft attitude.

2.1.3 ATTITUDE CONTROL.

The attitude control function is illustrated in figure 2.1-2. The control may be to maintain a specific orientation, or to command small rotations or translations. To maintain a specific orientation, the attitude error signals, described in the preceding paragraph, are also routed to the control reaction jet on-off assembly. These signals are conditioned and applied to the proper reaction jet which fires in the direction necessary to return the spacecraft to the desired attitude. The attitude is maintained within specified deadband limits. The deadband is limited within both a rate and attitude limit to hold the spacecraft excursions from exceeding either an attitude limit or angular rate limit. To maneuver the spacecraft, the reaction jets are fired automatically under command of the CMC or manually by flight crew use of the rotation control. In either case, the attitude control function is inhibited until the maneuver is completed. Translations of small magnitude are performed along the +X axis for fuel settling of SPS propellants prior to burns, or for a backup deorbit by manual commands of the translation control. An additional control is afforded by enabling the minimum impulse control at the lower equipment bay. The minimum impulse control produces one directional pulse of small magnitude each time it is moved from detent. These small pulses are used to position the spacecraft for navigational sightings.

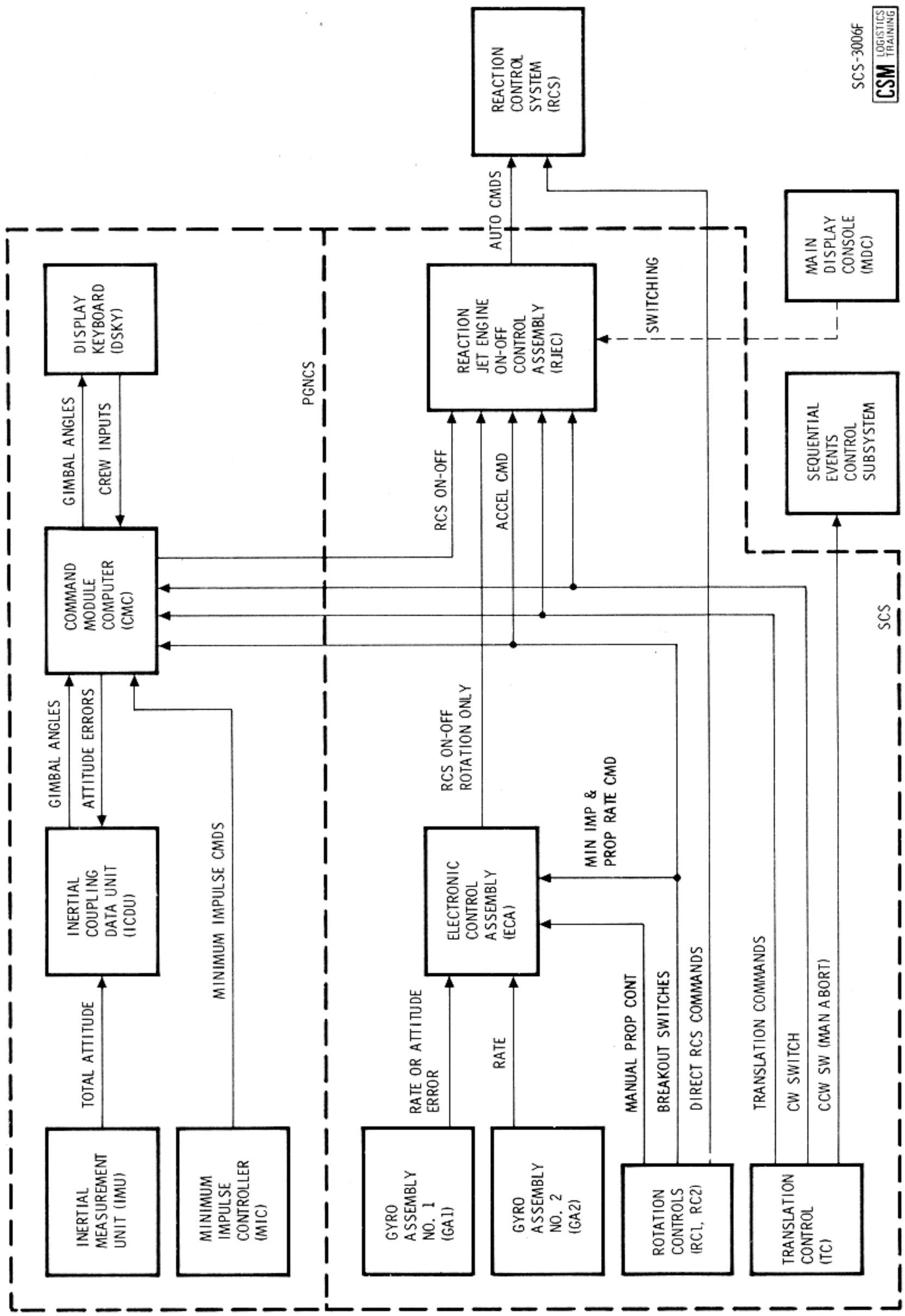

Figure 2.1-2. G&C Attitude Control

2.1.4 THRUST AND THRUST VECTOR CONTROL.

The guidance and control system provides control of two thrust functions (figure 2.1-3). The first is control of the SPS engine on-off time to control the total magnitude of thrust applied to the spacecraft. Primary control of thrust is through the CMC. The thrust-on time, magnitude of thrust desired, and thrust-off signal are preset by the flight crew, and performed in conjunction with the CMC. The value of velocity change attained from the thrust is derived by monitoring accelerometer outputs from the IMU. When the desired velocity change has been achieved, the CMC removes the thrust-on signal. Secondary thrust control is afforded by the velocity counter portion of the entry monitor subsystem. The counter is set to the value of desired thrust prior to the engine on signal. Velocity change is sensed by a +X axis accelerometer which produces output signals representative of the velocity change. These signals drive the velocity counter to zero which terminates the engine on signal. In either case, the actual initiation of thrust is performed by the flight crew. There is a switch for manual override of the engine on and off signals.

Thrust vector control is required because of center-of-gravity shifts caused by depletion of propellants in the SPS tanks. Thrust vector control is accomplished by electromechanical actuators to position the gimbal-mounted SPS engine. Automatic thrust vector control (TVC) commands may originate in the PGNCS or SCS systems. In either case, the pitch and yaw attitude error signals are removed from the RCS system and applied to the SPS engine gimbals. Manual TVC is provided to enable takeover of the TVC function if necessary. The MTVC is enabled by twisting the translation control to inhibit the automatic system, and enables the rotation control which provides command signals for pitch and yaw axes to be applied to the gimbals. The initial gimbal setting is accomplished prior to the burn by positioning thumbwheels on the fuel pressure and gimbal position display.

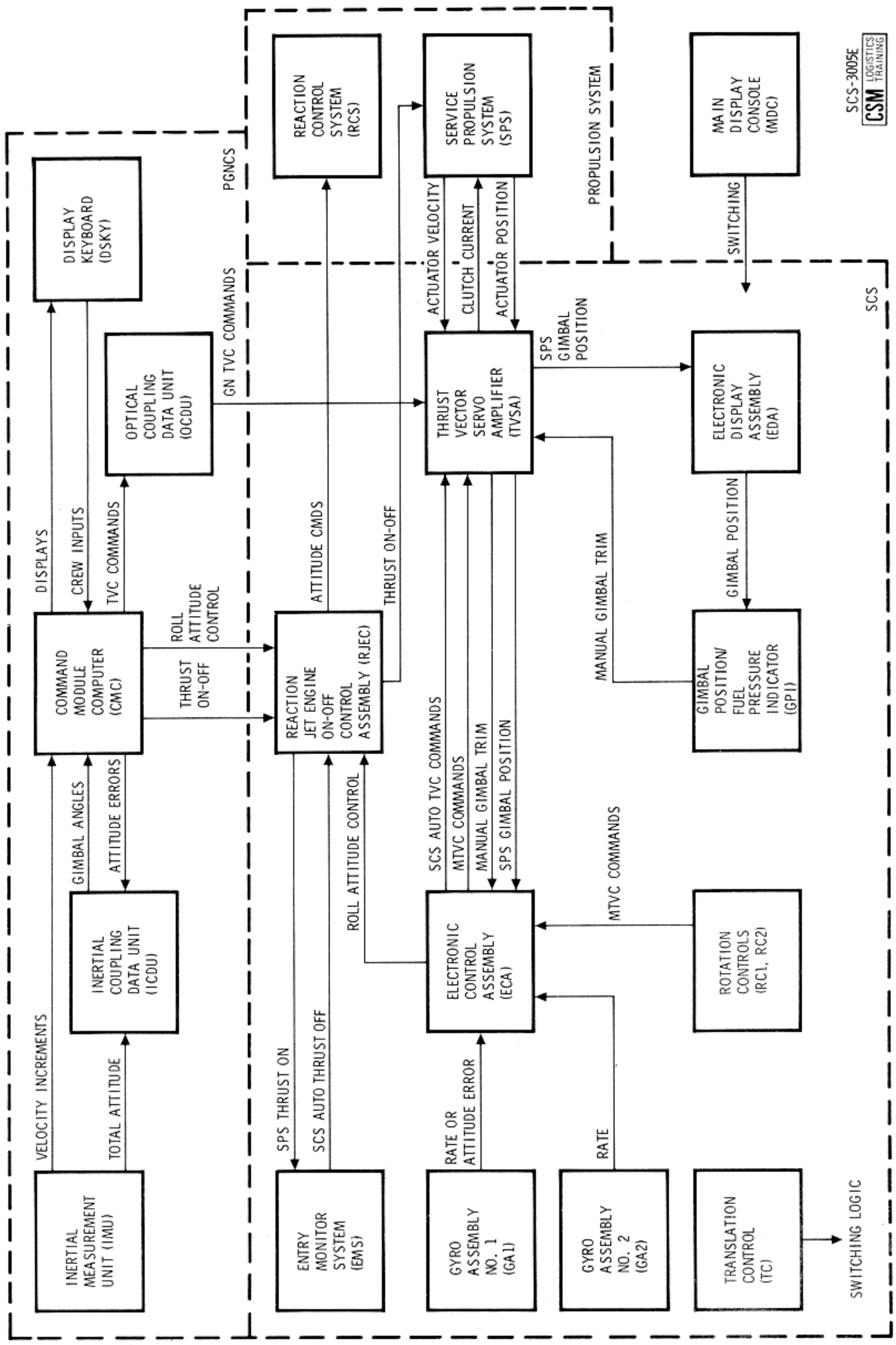

Figure 2.1-3. G&C Thrust Vector Control

G&N

SECTION 2

SUBSECTION 2.2

GUIDANCE AND NAVIGATION SYSTEM (G&N)

2.2.1 INTRODUCTION.

The primary guidance navigation and control (PGNCS) system measures spacecraft attitude and velocity, determines trajectory, controls spacecraft attitude, controls the thrust vector of the service propulsion engine, and provides abort information and display data. Primary determination of the spacecraft velocity and position and computation of the trajectory parameters is accomplished by the manned space flight network (MSFN).

The PGNCS system consists of three subsystems as follows:

- Inertial subsystem (ISS)
- Computer subsystem (CSS)
- Optics subsystem (OSS).

The inertial subsystem is composed of an inertial measurement unit (IMU), part of the power and servo assembly (PSA), part of the controls and displays, and three inertial coupling data units (CDUs). The IMU provides an inertial reference with a gimbaled, three-degree-of-freedom, gyro-stabilized stable platform.

The computer subsystem is composed of the command module computer (CMC) and two display and keyboard panels (DSKYs), which are part of the controls and displays. The CMC is a digital computer which processes and controls information to and from the IMU, the optics, DSKYs, and stores programs and reference data.

The optics subsystem is composed of a scanning telescope (SCT), a sextant (SXT), drive motors for positioning the SCT and SXT, parts of the PSA, part of the controls and displays, and two optics CDUs. The SCT and SXT are used to determine the spacecraft position and attitude with relation to stars and/or landmarks.

The three G&N subsystems are configured to enable the CSS and OSS to be operated independently. This allows continued use of the CSS and/or OSS in the event of a malfunction in one of these subsystems or in the ISS. System power requirements and reference signals are provided by the power and servo assembly (PSA). Major components

of the system are located in the command module lower equipment bay (figure 2.2-1). System circuit breakers, caution and warning indicators, and one of the DSKYs are located on the main display console.

2.2.2 FUNCTIONAL DESCRIPTION.

The primary guidance navigation and control system provides capabilities for the following:

- Inertial velocity and position (state vector) computation
- Optical and inertial navigation measurements
- Spacecraft attitude measurement and control
- Generation of guidance commands during CSM-powered flight and CM atmospheric entry.

The PGNCS system is initially activated and aligned during the prelaunch phase. During the ascent phase, the system measures velocity and attitude, computes position, compares the actual spacecraft trajectory with a predetermined trajectory, and displays pertinent data. The flight crew uses the displayed information as an aid for decision to abort or continue the mission.

During periods when on-board velocity and/or attitude change sensing is not required, the IMU can be placed in standby operation to conserve electrical power. The CMC is used more extensively than the IMU; however, it can also be placed in standby operation to conserve electrical power. When the guidance and navigation function is to be restored, the IMU and CMC are reactivated, with the CMC using the last computed velocity as the basis for further velocity computations. New positional data must be acquired from optical sightings or MSFN through telemetry or voice communications.

Initial position and attitude information as well as periodic updating of this information is made through use of the optics. This is accomplished by the navigator making two or more landmarks, star-landmark, star-horizon, and/or star sightings. The sightings are made by acquiring the star-landmark or star-horizon with the SCT and/or SXT. When the viewed object is centered, a mark command is initiated. The CMC reads the optics angles, IMU angles, and time, in conjunction with internal programs to determine the spacecraft position. This position information and the spacecraft velocity are used to compute an estimated trajectory. The actual trajectory is compared with previous trajectory data to generate the trajectory error, if any, for further reference. Optical measurements are also used in aligning the IMU to a specific reference orientation.

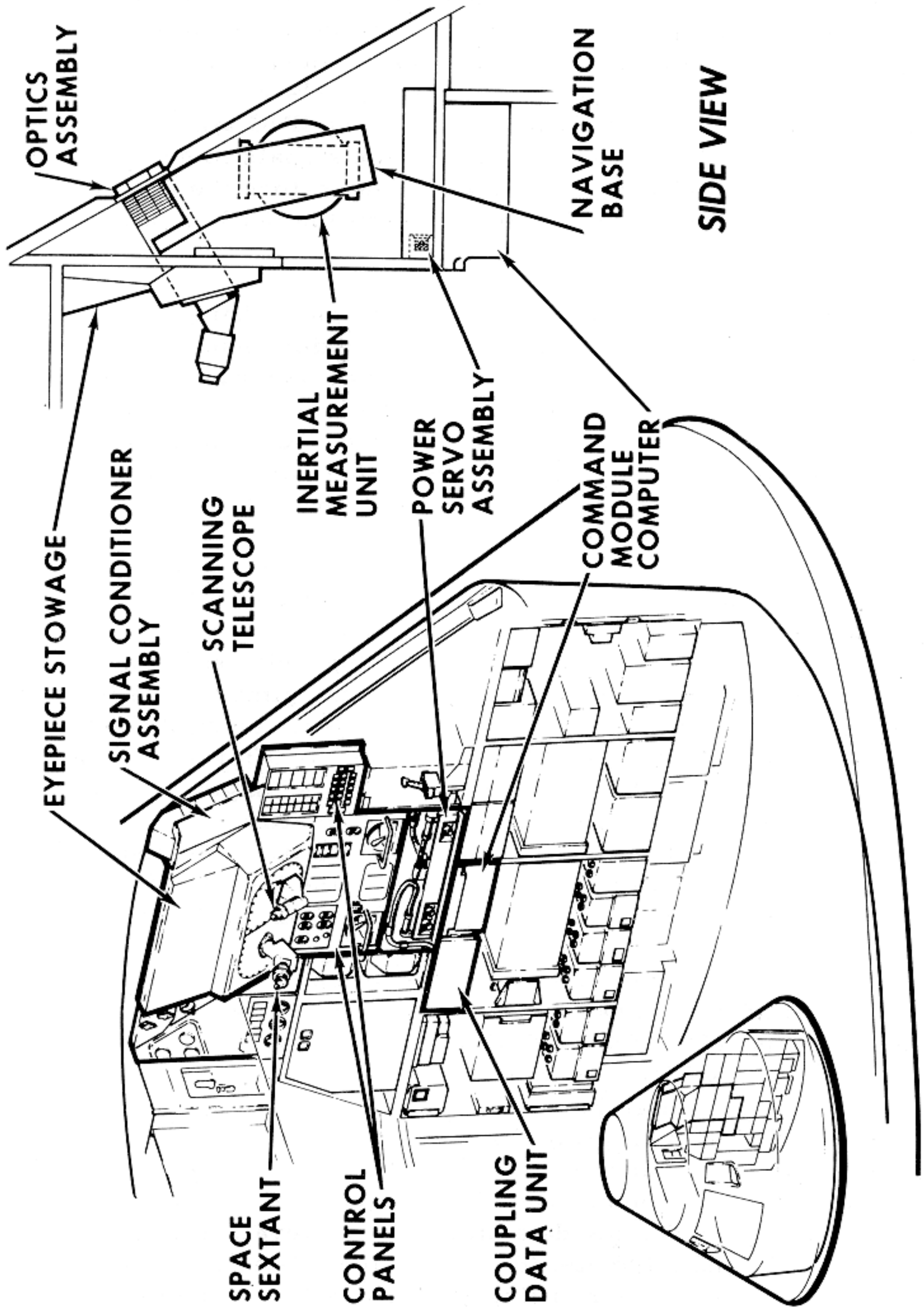

Figure 2.2-1. G&N Equipment Location

The IMU (figure 2.2-3) contains three inertial rate integrating gyros (IRIGs) and three pulsed-integrating pendulous accelerometers (PIPAs). The IRIGs and PIPAs are mounted on the stable platform which is gimbaled to provide three degrees of freedom. The stable platform inertial reference is maintained by the IRIGs in conjunction with electronic stabilization loops. Any displacement of the platform is sensed by the IRIGs, which produce output signals representative of the magnitude and direction of displacement. The IRIG signals are applied to servo amplifiers, which condition the signals to drive gimbal torque motors. The gimbal torque motors then restore the initial platform orientation by driving the gimbals until the IRIG signals are nulled.

The PIPAs are orthogonally mounted and sense changes in spacecraft velocity. An acceleration or deceleration results in output signals which are representative of the magnitude and direction of the velocity change. The output signals are applied to the CMC which uses the information to update spacecraft velocity data. Continual updating of velocity information, with respect to the initial spacecraft position and trajectory, enables the CMC to provide current velocity, position, and trajectory information.

The IMU also provides a space-stabilized reference for spacecraft attitude sensing and control. Attitude change sensing is accomplished by monitoring the spacecraft attitude with reference to the stable platform. Resolvers are mounted at the gimbal axes to provide signals representative of the gimbal angles. Inertial CDUs repeat the platform attitude. Attitude monitoring is afforded by comparing the inertial CDU angles with the CMC desired angles. If the angles differ, error signals are generated. If the attitude error is larger than the selected deadband limits, the CMC fires the appropriate RCS engines. The spacecraft is rotated back to the initial reference attitude and the error signals are nulled (within deadband limits).

The CMC provides automatic execution of computer programs, automatic control of ISS and OSS modes, and in conjunction with the DSKYs, manual control of ISS and OSS modes and computer displays. The CMC contains a two-part memory which consists of a large nonerasable section and a smaller erasable section. Nonerasable memory contains mission and system programs, and other predetermined data which are wired in during assembly. Data readout from this section is nondestructive and cannot be changed during operation. The erasable section of memory provides for data storage, retrieval, and operations upon measured data and telemetered information. Data readout from this section is destructive, permitting changes in stored data to be made as desired. Information within the memory may be called up

for display on the two DSKYs. The DSKYs enable the flight crew to enter data or instructions into the CMC, request display of data from CMC memory, and offer an interrupt control of CMC operation. The CMC timing section provides timing signals of various frequencies for internal use and to other on-board systems which require accurate or synchronized timing. Data within the CMC is transmitted to MSFN through a "downlink" telemetry function. Telemetered data is transmitted as a function of a CMC program or by request from MSFN. Data within the CMC may be updated through "uplink" telemetry from the MSFN. The CMC performs guidance functions by executing internal programs using predetermined trajectory parameters, attitude angles from the inertial CDUs, velocity changes from the PIPAs, and commands from the DSKYs (crew) to generate control commands. The navigation function is performed by using stored star-landmark or star-horizon data, optics angles from the optics CDUs, and velocity changes from the PIPAs in the execution of navigation programs.

The optics provide accurate star and landmark angular measurements. Sightings are accomplished by the navigator using the SXT and SCT. The optics are positioned by drive motors commanded by the optics hand controller or by the CMC. The shaft axes are parallel. Trunnion axes may be operated in parallel or offset, as desired. The SCT is a unity power instrument providing an approximate 60-degree field of view. It is used to make landmark sightings and to acquire and center stars or landmarks prior to SXT use. The SXT provides 28-power magnification with a 1.8-degree field of view. The SXT has two lines of sight, enabling it to measure the included angle between two objects. This requires two lines of sight which enable the two viewed objects to be superimposed. For a star-landmark or star-horizon sighting, the landmark line of sight is centered along the SXT shaft axis. The star image is moved toward the landmark or horizon by rotating the shaft and trunnion axes until the two viewed objects are superimposed. The shaft and trunnion angles are repeated by the optic CDUs. When the navigator is satisfied with image positions, he issues a marked command to the CMC. The CMC reads the optics CDU angles, IMU CDU angles, and time and computes the position of the spacecraft. The CMC bases the computation on stored star and navigator-supplied landmark data which may also be used by the CMC to request specific stars for navigational sightings. Two or more sightings, on two or more different stars, must be taken to perform a complete position determination.

2.2.3 MAJOR COMPONENT/SUBSYSTEM DESCRIPTION.

2.2.3.1 Inertial Subsystem.

The function of the inertial subsystem is to provide a space-stabilized inertial reference from which velocity changes and attitude changes can be sensed. It is composed of the navigation base (NB), the inertial measurement unit (IMU), parts of the power and servo assembly (PSA), parts of the control and display panels, and three coupling data units (CDUs).

2.2.3.1.1 Navigation Base.

The navigation base (NB) is the rigid, supporting structure which mounts the IMU and optical instruments. The NB is manufactured and installed to close tolerances to provide accurate alignment of the equipment mounted on it. It also provides shock-mounting for the IMU and optics.

2.2.3.1.2 Inertial Measurement Unit.

The inertial measurement unit (IMU) is the main unit of the inertial subsystem. It is a three-degree-of-freedom stabilized platform assembly, containing three inertial rate integrating gyros (IRIGs), and three pulsed-integrating pendulous accelerometers (PIPAs). The stable member itself is machined from a solid block of beryllium with holes bored for mounting the PIPAs and IRIGs.

The stable platform attitude is maintained by the IRIGs, stabilization loop electronics, and gimbal torque motors. Any displacement of the stable platform or gimbal angles is sensed by the IRIGs which generate error signals. IRIG error signals are resolved, amplified, and applied to stabilization loop electronics. The resultant signal is conditioned and applied to the gimbal torque motors, which restore the desired attitude.

The stable platform provides a space-referenced mount for three PIPAs, which sense velocity changes. The PIPAs are mounted orthogonally to sense the velocity changes along all three axes. Any translational force experienced by the spacecraft causes an acceleration or deceleration which is sensed by one or more PIPAs. Each PIPA generates an output signal proportional to the magnitude and direction of velocity change. This signal, in the form of a pulse train, is applied to the CMC. The CMC will use the signal to update the velocity information, and will also generate signals to enable the torquing of each PIPA ducosyn back to null.

The temperature control system is a thermostatic system that maintains the IRIG and PIPA temperatures within their required limits during both IMU standby and operate modes. Heat is applied by end-mount heaters on the inertial components, stable member heaters, and a temperature control anticipatory heater. Heat is removed by convection, conduction, and radiation. The natural convection used during IMU standby modes is changed to blower-controlled, forced convection during IMU operating modes. IMU internal pressure is normally between 3.5 and 15 psia enabling the required forced convection. To aid in removing heat, a water-glycol solution passes through coolant passages in the IMU support gimbal. Therefore, heat flow is from the stable member to the case and coolant. The temperature control system consists of the temperature control circuit, the blower control circuit, and the temperature alarm circuit. A separate external temperature control system is also provided for test configurations but will not be discussed in this manual.

2.2.3.1.3 Coupling Data Unit.

The CDU, an all electronic device, is used as an interface element between the ISS and CSS, the OSS and CSS, and the CSS and various controls and displays. It functions primarily as an analog-to-digital (A/D) or digital-to-analog (D/A) converter. There are five, almost identical, loops, one each for the inner, middle, and outer IMU gimbals, and one each for the shaft and trunnion optical axes. The ISS portion of the CDU performs the following functions:

a. Converts IMU gimbal angles from analog-to-digital form, and supplies the CMC with this information.

b. Converts digital signals from the CMC to either 800-cps or direct-current signals.

c. Controls the moding of the ISS through logical manipulation of computer discretes.

The analog signal from the 1X and 16X resolvers, located on the IMU gimbals, is transmitted to the CDU. This angular information, proportional to the sine and cosine of the gimbal angle, is converted to digital form with one pulse to the CMC equivalent to 40 arc-seconds of gimbal movement.

During coarse align, attitude error display, and Saturn takeover modes, the ISS channels of the CDU provide the digital to analog conversion of the CMC output to generate an a-c or d-c output. The a-c output is applied to the servo amplifiers of the PSA to drive the gimbals to the desired angle, and is also applied to the FDAI for deflection of the attitude error needles. The d-c signal is applied to the Saturn Flight Control Computer which will gimbal the Saturn engine or provide commands to the Saturn attitude control system.

2.2.3.1.4 Power and Servo Assembly.

The purpose of the power and servo assembly (PSA) is to provide a central mounting point for the majority of the G&N system power supplies, amplifiers, and other modular electronic components.

The PSA is located on the lower D&C panel rack directly below the IMU. It consists of 42 modules mounted to a header assembly. Connectors and harnessing are integral to the construction of the header assembly, and G&N harness branches are brought out from the PSA header. A thin cover plate is mounted on the PSA, providing a hermetic seal for the interior. During flight, this permits pressurization of the PSA to remain at 15 psi. Connectors are available at the PSA for measuring signals at various system test points.

2.2.3.2 Computer Subsystem.

The computer subsystem (CSS) consists of the command module computer (CMC), and two display and keyboard panels (DSKYs). The CMC and one DSKY are located in the lower equipment bay. The other DSKY is located on the main display console.

2.2.3.2.1 Command Module Computer.

The CMC is a core memory, digital computer with two types of memory, fixed and erasable. The fixed memory permanently stores navigation tables, trajectory parameters, programs, and constants. The erasable memory stores intermediate information.

The CMC processes data and issues discrete control signals, both for the PGNCS and the other spacecraft systems. It is a control computer with many of the features of a general purpose computer. As a control computer, the CMC aligns the stable platform of the inertial measurement unit (IMU) in the inertial subsystem, positions the optical unit in the optical subsystem, and issues control commands to the spacecraft. As a general purpose computer, the CMC solves guidance problems required for the spacecraft mission. In addition, the CMC monitors the operation of the PGNCS and other spacecraft systems.

The CMC stores data pertinent to the flight profile that the spacecraft must assume in order to complete its mission. This data, consisting of position, velocity, and trajectory information, is used by the CMC to solve the various flight equations. The results of various equations can be used to determine the required magnitude and direction of thrust required. Corrections to be made are established by the CMC. The spacecraft engines are turned on at the correct time, and steering

signals are controlled by the CMC to reorient the spacecraft to a new trajectory, if required. The inertial subsystem senses acceleration and supplies velocity changes to the CMC for calculating the total velocity. Drive signals are supplied from the CMC to coupling data unit (CDU) and stabilization gyros in the inertial subsystem to align the gimbal angles in the IMU. Error signals are also supplied to the CDU to provide steering capabilities for the spacecraft. CDU position signals are fed to the CMC to indicate changes in gimbal angles, which are used by the CMC to keep cognizant of the gimbal positions. The CMC receives mode indications and angular information from the optical subsystem during optical sightings. This information is used by the CMC to calculate present position and orientation, and is used to refine trajectory information. Optical subsystem components can also be positioned by drive signals supplied from the CMC.

CMC Organization. The CMC is functionally divided into seven blocks: (See figure 2.2-3).

1. Timer
2. Sequence generator
3. Central processor
4. Memory
5. Priority control
6. Input-output
7. Power.

Timer. The timer generates all the necessary synchronization pulses to ensure a logical data flow from one area to another within the CMC. It also generates timing waveforms which are used by (1) the CMC's alarm circuitry, and (2) other areas of the spacecraft for control and synchronization purposes.

The master clock frequency is generated by an oscillator and is applied to the clock divider logic. The divider logic divides the master clock input into gating and timing pulses at the basic clock rate of the computer. Several outputs are available from the pulses at the basic clock rate of the computer. Several outputs are available from the scaler, which further divides the divider logic output into output pulses and signals used for gating, to generate rate signal outputs and for the accumulation of time. Outputs from the divider logic also drive the time pulse generator which produces a recurring set of time pulses. This set of time pulses defines a specific interval (memory cycle time) in which access to memory and word flow take place within the computer.

The start-stop logic senses the status of the power supplies and specific alarm conditions in the computer, and generates a stop signal which is applied to the time pulse generator to inhibit word flow. Simultaneously, a fresh-start signal is generated which is applied to

all functional areas in the computer. The start-stop logic, and subsequently word flow in the computer, can also be controlled by inputs from the computer test set (CTS) during pre-installation systems and subsystem tests.

Sequence Generator. The sequence generator directs the execution of machine instructions. It does this by generating control pulses which logically sequence data throughout the CMC. The control pulses are formed by combining the order code of an instruction word with synchronization pulses from the timer.

The sequence generator contains the order code processor, command generator, and control pulse generator. The sequence generator executes the instructions stored in memory by producing control pulses which regulate the data flow of the computer. The manner in which the data flow is regulated among the various functional areas of the computer and between the elements of the central processor causes the data to be processed according to the specifications of each machine instruction.

The order code processor receives signals from the central processor, priority control, and peripheral equipment (test equipment). The order code signals are stored in the order code processor and converted to coded signals for the command generator. The command generator decodes these signals and produces instruction commands. The instruction commands are sent to the control pulse generator to produce a particular sequence of control pulses, depending on the instruction being executed. At the completion of each instruction, new order code signals are sent to the order code processor to continue the execution of the program.

Central Processor. The central processor performs all arithmetic operations required of the CMC, buffers all information coming from and going to memory, checks for correct parity on all words coming from memory, and generates a parity bit for all words written into memory.

The central processor consists of the flip-flop registers, the write, clear, and read control logic, write amplifiers, memory buffer register, memory address register and decoder, and the parity logic. All data and arithmetic manipulations within the CMC take place in the central processor.

Primarily, the central processor performs operations indicated by the basic instructions of the program stored in memory. Communication within the central processor is accomplished through the write amplifiers. Data flows from memory to the flip-flop registers or vice

versa, between individual flip-flop registers, or into the central processor from external sources. In all instances, data is placed on the write lines and routed to specific register, or to another functional area under control of the write, clear, and read logic. This logic section accepts control pulses from the sequence generator and generates signals to read the content of a register onto the write lines, and write this content into another register of the central processor or to another functional area of the CMC. The particular memory location is specified by the content of the memory address register. The address is fed from the write lines into this register, the output of which is decoded by the address decoder logic. Data is subsequently transferred from memory to the memory buffer register. The decoded address outputs are also used as gating functions within the CMC.

The memory buffer register buffers all information read out or written into memory. During read out, parity is checked by the parity logic and an alarm is generated in case of incorrect parity. During write-in, the parity logic generates a parity bit for information being written into memory. The flip-flop registers are used to accomplish the data manipulations and arithmetic operations. Each register is 16 bits or one computer word in length. Data flows into and out of each register as dictated by control pulses associated with each register. The control pulses are generated by the write, clear, and read control logic.

External inputs through the write amplifiers include the content of both the erasable and fixed memory bank registers, all interrupt addresses from priority control, control pulses which are associated with specific arithmetic operations, and the start address for an initial start condition. Information from the input and output channels is placed on the write lines and routed to specific destinations either within or external to the central processor. The CTS inputs allow a word to be placed on the write lines during system and subsystem tests.

Registers. Registers A, L, Q, Z, and B consist of 16 bit positions each. These are numbered 16 through 1 reading from left to right. Register E BANK consists of three bit positions numbered 11 through 9. Register S consists of 12 bit positions numbered 12 through 1. Register SQ consists of seven bit positions, SQ, EXT, 16 and 14 through 10. Registers X and Y comprise the adder and each register consists of 16 bit positions. The 16 output gates of the adder are called register U; note, however, that U is not a register in the sense of the flip-flop registers comprising the central processor. Register U and the write amplifiers each consists of 16 bit positions numbered 16 through 1. All registers mentioned so far may contain addresses, a code, etc. They do not, however, contain a parity bit. Whenever a number is contained in these registers, the lowest order bit is stored

in bit position 1 and the highest order bit is stored in bit position 14. The sign bit is stored in bit position 16. A zero in this bit position signifies a positive number and a one signifies a negative number. Bit position 15 is used for storing either the overflow or underflow bit.

Register G serves as a buffer between the central processor and memory. It consists of 16 bit positions numbered 16 through 1. Any parity bit received from memory is transferred to the parity block but not to the central processor register. The 16 inputs to the parity block are numbered 16 and 14 through 0. No provision is made for entering an overflow bit into the parity block.

Register A is called the "accumulator." It contains the results of arithmetic operations.

Register L is called the "lower order accumulator." It contains the least significant bits of the product or quotient after a multiplication or division process.

Register B is called the "buffer register." It also provides a means of complementing since its reset side can also be interrogated. The reset side is sometimes called "register C."

The Z register is the program counter. It contains the address of the next instruction word in the program. As each instruction is executed, this register is incremented by one because the instruction words usually are stored sequentially in memory.

The Q register is named the "return address register." When the CMC transfers control to another program or routine, the contents of the Z register are stored in register Q. When the CMC returns to the original program, register Q contains the address of the appropriate instruction.

The write amplifiers provide the current driving capabilities for the registers. These amplifiers in no way store information; they simply route information.

Register S contains the address of the word to be called out from memory. Register E BANK is also used when erasable memory is addressed. Register F BANK is used when fixed memory is addressed.

Memory. Memory provides the storage for the CMC and is divided into two sections: erasable memory and fixed memory. Erasable memory can be written into or read from; its readout is destructive. Fixed memory cannot be written into and its readout is nondestructive.

The CMC has erasable and fixed memories. The erasable memory can be written into and read out of; fixed memory can only be read out of. Erasable memory stores intermediate results of computations, auxiliary program information, and variable data supplied by external inputs from the PGNCS and other systems of the spacecraft. Fixed memory stores programs, constants, and tables. There is a total of 38,912, sixteen bit word storage locations in fixed and erasable memories. It should be noted that the majority of the memory capacity is in fixed memory (36,864 word locations). Both memories are magnetic core storage devices; however, the cores are used differently in each type of memory. It is assumed that the reader is familiar with the basic magnetic properties of a ferrite core as described by a square hysteresis curve. A core is a static storage device having two stable states. It can be magnetized in one or two directions by passing a sufficient current, I, through a wire which pierces the core. The direction of current determines the direction of magnetization. The core will retain its magnetization indefinitely until an opposing current switches the core in the opposite direction. Wires carrying current through the same core are algebraically additive. Sense wires which pierce a switched core will carry an induced pulse.

Priority Control. Priority control establishes a processing priority of operations which must be performed by the CMC. These operations are a result of conditions which occur both internally and externally to the CMC. Priority control consists of counter priority control and interrupt priority control. Counter priority control initiates actions which update counters in erasable memory. Interrupt priority control transfers control of the CMC to one of several interrupt subroutines stored in fixed memory.

The start instruction control restarts the computer following a hardware or program failure. The counter instruction control updates the various counters in erasable memory upon reception of certain incremental pulses. The counter instruction control is also used during test functions to implement the display and load requests provided by the computer test set. The interrupt instruction control forces the execution of the interrupt instruction (RUPTOR) to interrupt the current operation of the computer in favor of a programmed operation of a higher priority.

Input-Output. The input-output section routes and conditions signals between the CMC and other areas of the spacecraft. In addition to the counter interrupt and the program interrupts previously described, the CMC has a number of other inputs derived from its interfacing hardware. These inputs are a result of the functioning of the hardware,

or an action by the operator of the spacecraft. The counter interrupts, in most cases, enable the CMC to process inputs representative of data parameters such as changes in velocity. The program interrupt inputs to the CMC are used to initiate processing of functions which must be processed a relatively short time after a particular function is present. The other inputs to the CMC, in general, enable the CMC to be cognizant of "conditions" which exist in its environment. These inputs are routed to CMC and are available to the CMCs programs through the input channels.

The outputs of the CMC fall in one of the following categories: data, control, or condition indications. Some of these outputs are controllable through the CMC program while others are present as a function of the CMC circuitry. All of the outputs which are controlled by the CMC programs are developed through the CMC output channels.

Channel 01 is the L register.
Channel 02 is the Q register.
Channel 03 the high-order scaler channel.
Channel 04 the low-order scaler channel.

Output Channel 05 has eight bit positions and is associated with the reaction control system jets.

Output Channel 06 has eight bit positions and is also associated with the reaction control system jets. A logic one in any of the bit positions will cause the appropriate reaction control jets to be fired. The outputs of this channel control the jets used for Z and Y translations, and the roll rotation. The logic is the same as for output channel 05. Assume that it was desired to perform a pure roll maneuver. One of the ways this could be implemented would be to have logic ones in bit positions 1 and 3 while all other bit positions contained a logic zero. There are other methods, of course, but these will not be detailed.

Channel 07 is the F EXT register. It is associated with the selection of word locations in fixed memory. This channel has three bit positions.

Output Channel 10 routes information contained in this channel to the DSKYs. The different configurations light various displays on the DSKYs.

Output Channel 11 routes information contained in bits 1 through 7 of this channel to the DSKYs. Bit 13 is routed to the SCS system.

Output Channel 12 consists of 15 bit positions, 14 of which are presently used. The outbits are d-c signals sent to the spacecraft and PGNCS.

Output Channel 13 associates the first four bits of this channel with the VHF ranging. Bit positions 12 through 14 have been covered under program interrupt priority control.

Output Channel 14 associates bit positions 11 through 15 with the CDU drive control. This control generates the following pulse trains which are sent to the CDUs: CDUXDP (X CDU positive drive pulse), CDUXDM (X CDU negative drive pulse), CDUYDP, CDUYDM, CDUZDP, CDUZDM, TRNDP, TRNDM, SHAFTDP (shaft CDU positive drive pulse), and SHAFTDM. The CDU drive control also enters the following d-c signals into the counter-priority control to request the execution of a DINC instruction: X IMU, CDU, Y IMU, CDU, Z IMU CDU, S OP CDU and T OP CDU.

Signal X IMU CDU is generated when bit position 15 contains a logic one. Signal Y IMU CDU is generated when bit position 14 contains a logic one, signal Z IMU CDU when bit position 13 contains a logic one, signal T OP CDU when bit position 12 contains a logic one, and signal S OP CDU when bit position 11 contains a logic one. More than one of these signals can be generated simultaneously.

Once a desired quantity, e.g., -432, has been entered into a CDU counter, e.g., erasable memory address 0050, and output channel 14 has been properly set (logic 1 in bit position 15), the CDU drive control generates signal X IMU CDU which sets a flip-flop in counter priority control and commands the sequence generator to execute a DINC instruction. As the instruction is executed, the counter control is diminished by one to -431. The CDU drive control then generates a CDUXDM pulse and routes it to the X CDU. Since the priority flip-flop is still set, another DINC instruction is requested. This is repeated until the counter content has diminished to zero. Once the counter contains zero and a DINC instruction is executed, a signal is generated which clears bit position 15 of output channel 14, resets the priority cell, and stops the transmission of pulses.

The gyro drive control selects a gyro to be torqued positively or negatively, and then applies a 3200-cps pulse train to the appropriate gyro to accomplish this function. There are six signals associated with selection of the gyro and the direction in which it will be torqued: GYXP (drive gyro x positive), GYXM (drive gyro x negative), GYYP, GYYM, GYZP, and GYZM. The appropriate signal is determined by

the bit configuration of bits 7 through 9 of output channel 14. If bit positions 6 and 10 are a logic one, a 3200-cps pulse train is routed to the gyro electronics specified by bit positions 7 through 9, and a d-c signal is entered into the counter priority control which commands the sequence generator to perform a DINC instruction.

Assume that it is desired to torque the X-gyro in the negative direction by 123 pulses. The GYROS counter in counter priority control would be set to 123. Bit positions 7 through 9 would be 101 respectively, and bit positions 6 and 10 would be logic one. Each time a pulse is sent to the gyro, the GYROS counter is DINCed. The d-c signal to counter priority will remain until the GYROS counter goes to zero which will terminate the torquing.

Input Channel 15. This channel consists of five bit positions. When a key on the main panel DSKY is pressed, a unique five-bit code is entered into this channel. The RUPT 5 interrupt routine is also developed whenever a key on the main panel DSKY is pressed.

Input Channel 16. This channel consists of seven bit positions. If the MARK pushbutton has been pressed, a logic one is entered into bit position 6. This would cause a KEYRUPT 2 (RUPT 6) interrupt routine.

If the MARK REJECT pushbutton has been pressed, a logic one is entered into bit position 7 of this channel. This will also cause a KEYRUPT 2 interrupt routine to be performed. When a key on the navigation panel DSKY is pressed, a unique five-bit code is entered into bit positions 1 through 5. The insertion of this code into input channel 16 initiates a KEYRUPT 2 interrupt routine.

Input Channels 17 through 27 are spares.

Input Channel 30 consists of 15 bit positions. The inputs to these positions are inverted and utilized as follows:

a. Bit Position 1 (ULLAGE THRUST PRESENT). This input is generated by the S-IVB instrumentation unit. If this input is a logic zero, it signifies that the action has occurred or has been commanded to occur.

b. Bit Position 2 (SM SEPARATE). This input originates in the mission sequencer and is a logic 0 when the service module is separated from the command module.

c. Bit Position 3 (SPS READY). A logic zero in this bit position indicates that the pilot has completed the SPS engine start checklist.

d. Bit Position 4 and 5 (S-IVB SEPARATE - ABORT, LIFT OFF). These inputs are generated in the S-IVB instrumentation unit. They indicate that the appropriate actions have occurred or have been commanded to occur.

e. Bit Position 7 (OCDU FAIL). This input is generated in the OSS and is a logic zero when a failure has occurred in one of the optical CDUs.

f. Bit Position 9 (IMU OPERATE). A binary zero in this bit position indicates that the IMU is turned on and is operating with no malfunctions.

g. Bit Position 10 (SC CONTROL OF SATURN). A logic zero in this bit position indicates that the SC has control over the SATURN stage.

h. Bit Position 11 (IMU CAGE). A logic zero in this bit position indicates that the IMU gimbals are at their null position.

i. Bit Position 12 (IMU CDU FAIL). A logic zero in this bit position indicates that a failure has occurred in one of the inertial CDUs.

j. Bit Position 13 (IMU FAIL). A logic zero in this bit position indicates that a malfunction has occurred in the IMU stab loops.

k. Bit Position 14 (ISS TURN ON REQUEST). A logic zero is inserted into this bit position when the ISS has been turned on, or commanded to be turned on.

l. Bit Position 15 (TEMP IN LIMITS). A logic one is inserted into this bit position if the stable member temperature has not exceeded its design limits. If the limit has been exceeded, a logic zero will be stored.

Input Channel 31, channel consists of 15 bit positions. Bit positions 1 through 6 receive their inputs from the rotational hand controller. A logic zero in any one of these bit positions is associated with roll, pitch, or yaw commands. Bit positions 7 through 12 receive their inputs from the translational hand controller. A logic zero in any one of these bit positions is associated with the X, Y, or Z translation commands.

A logic zero in bit position 13 indicates that the present SC attitude is being held and the hand controller is not being used. A logic zero in bit position 14 indicates that the SC is drifting freely, and that the CMC is not receiving inputs from the hand controller or minimum impulse controller. A logic zero in bit position 15 indicates that the CMC is controlling the present SC attitude and the hand controller is not commanding an attitude change. All inputs to this channel are inverted.

Input Channel 32, the first six bit positions of this channel receive their inputs from the minimum impulse controller. A logic zero in any of these bit positions is associated with the pitch, yaw, or roll motion commanded by the minimum impulse controller. Bit position 11 contains a logic zero while the LM is attached to the CSM. All inputs to this channel are inverted.

Input Channel 33, inputs to this channel are generated in the CMC and optics. A logic zero in bit position 2 indicates that the VHF Digital Ranging information is good. Bit positions 4 and 5 receive d-c signals from the optics control panel. The d-c signals are generated by switch and relay closures. A logic zero appears in bit position 10 if the BLOCK UPLINK switch is thrown to the BLOCK position. Bit positions 11 or 12 contain a logic zero if the uplink or downlink telemetry rates are too high. Bit position 13 contains a logic zero if a failure occurs in the accelerometer loops. All inputs to this channel are inverted.

Output Channels 34 and 35 provide 16 bit words including a parity bit for downlink telemetry transmission.

Power. This section provides voltage levels necessary for the proper operation of the CMC.

CMC power is furnished by two switching-regulator power supplies: a +4-volt and a +14-volt power supply which are energized by fuel cells in the electrical power system.

Input voltage from the electrical power system is chopped at a variable duty cycle and then filtered to produce the required voltages. Chopping is accomplished by varying the pulse width of a signal having a fixed repetition rate and known amplitude.

Source voltage, +28 vdc, is supplied from the electrical power system through the power switch to the control module. The control module, essentially a pulse generator, detects the difference between the primary feedback output of the power supply and a reference voltage. (A secondary feedback path is connected to the CTS for marginal-voltage test operations.) A differential amplifier detects any change in the output voltage from the desired level. The output of the differential amplifier and a 51.2-kilocycle sync pulse from the timer drive a one-shot multivibrator in the control module. The differential amplifier output determines the multivibrator pulse width. The resultant +14-volt pulse is supplied to the power switch.

The power switch filters the control module output to produce the desired d-c voltage. Additional filtering action protects the electrical power system from the wide-load variations caused by the chopping action of the power supply. The power switch also contains a temperature sensing circuit. Because of load requirements, the +4-volt power supply requires two power switches.

G&N

The power supply outputs are monitored by a failure detector consisting of four differential amplifiers. There are two amplifiers for each power supply, one for overvoltage and one for undervoltage detection. If an overvoltage condition exists, a relay closure signal indicating a power failure is supplied to the spacecraft.

2.2.3.2.2 Display and Keyboard.

The DSKYs facilitate intercommunication between the flight crew and the CMC. The DSKYs operate in parallel, with the main display console DSKY providing CMC display and control while the crew are in their couches. (See figure 2.2-2.)

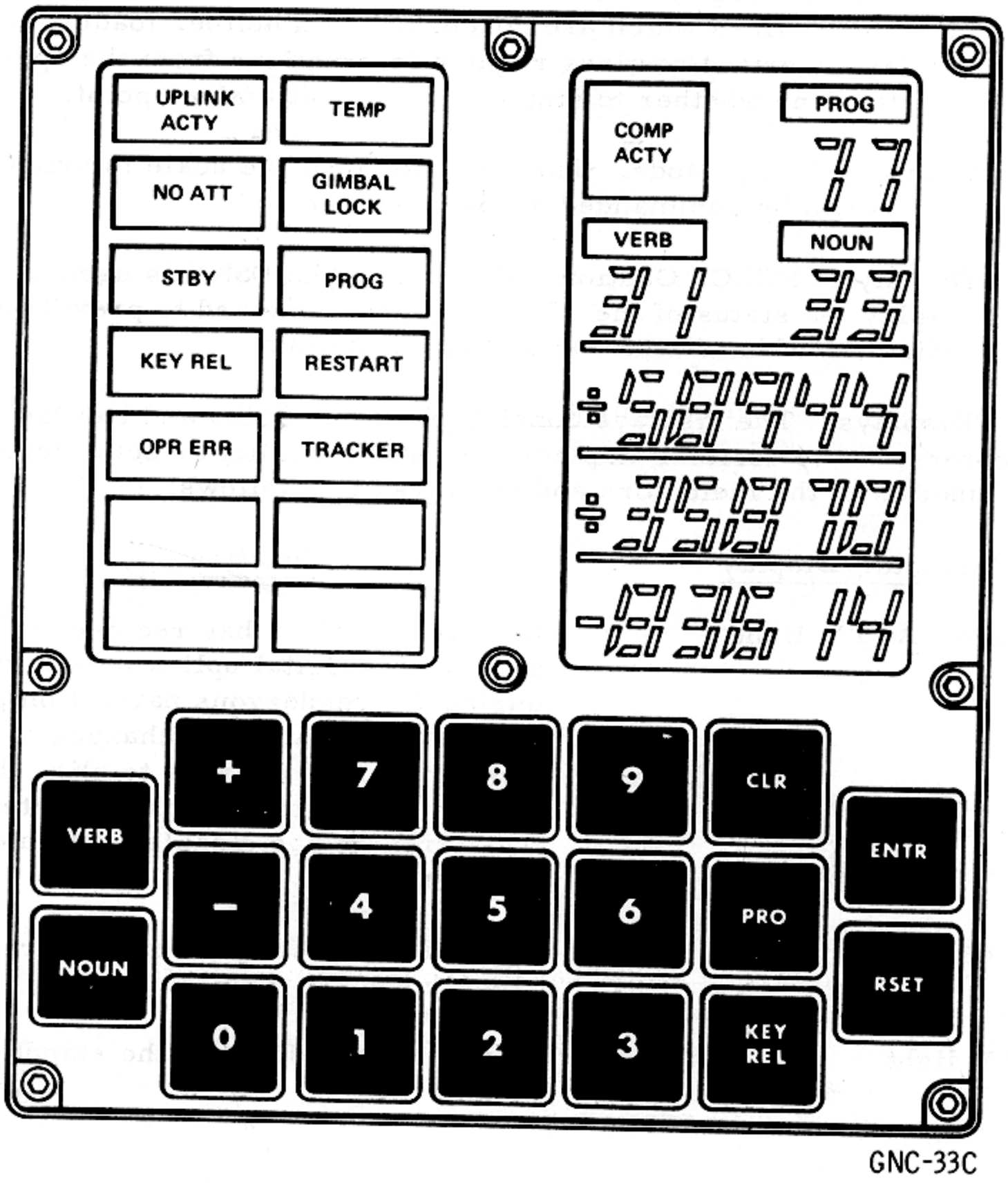

Figure 2.2-2. Display and Keyboard

The exchange of data between the flight crew and the CMC is usually initiated by crew action; however, it can also be initiated by internal computer programs. The exchanged information is processed by the DSKY program. This program allows the following five different modes of operation:

- Display of Internal Data. Both a one-shot display and a periodically updating display (called monitor) are provided.
- Loading External Data. As each numerical character is entered, it is displayed in the appropriate display panel location.
- Program Calling and Control. The DSKY is used to initiate a class of routines which are concerned with neither loading nor display. Certain routines require instructions from the operator to determine whether to stop or continue at a given point.
- Changing Major Mode. The initiation of large scale mission phases can be commanded by the operator.
- Display of PGNCS Caution and Status. The DSKY is used to display the status of the ISS, OSS, and CMC and to provide an indication of hardware and software cautions.

Displays. The displays consist of eleven status and caution indicators, three decimal displays and three decimal or octal registers. The function of the indicators and displays is as follows:

Indicator/Display	Function
UPLINK ACTY light	On when the CMC has received a complete 16 bit digital uplink message or during the rendezvous navigation program the gimbal angle changes are greater than 10 degrees to align the CSM to the desired tracking attitude and the astronaut has disabled the automatic tracking.
NO ATT light	Lighted when the ISS is in a coarse align mode.
STBY light	On when the CMC is in the standby mode.

G&N

Indicator/Display	Function
KEY REL light	Lighted when an internal display desires the use of the DSKY and the astronaut is using the DSKY or the astronaut presses a key (exceptions: PRO, RSET and ENTR) when an internal flashing display is currently on the DSKY or the astronaut presses a key (exceptions): PRO, RSET and ENTR) on top of his Monitor Verb display.
OPR ERR light	On when the operator performs an improper sequence of key depressions.
TEMP light	Lighted when the CMC receives a signal from the IMU temperature control that the stable member is outside of the temperature range of 126.3 to 134.3°F.
GIMBAL LOCK light	On when the middle gimbal angle exceeds ±70° from its zero position.
PROG light	Lighted when the internal program detects computational difficulty.
RESTART light	On when the CMC detects a temporary hardware or software failure.
TRACKER light	Lighted when the CMC receives a signal from the OCDU indicating a failure or the rendezvous navigation program reads VHF range information but the Data Good discrete is missing.
COMP ACTY light	On when the CMC is occupied with an internal sequence.
PROG display	Provides a decimal display of the current mission program in sequence.
VERB display	Provides a decimal display of the verb (action) being performed.

Indicator/Display	Function
NOUN display	Provides a decimal display of the noun (location or register) where the action (verb) is being performed.
REGISTER 1, 2 and 3	Provides a display of the contents of registers or memory locations.

The keyboard consists of ten numerical keys (pushbuttons) labeled 0 through 9, two sign keys (+ or -) and seven instruction keys: VERB, NOUN CLR (clear), PRO (proceed), KEY REL (key release), ENTR (enter), and RSET (reset).

Whenever a key is pressed, +14 vdc is applied to a diode encoder which generates a unique five-bit code associated with that key. There is, however, no five-bit code associated with the PRO key. If a key on the main panel DSKY is pressed, the five-bit code associated with that key is entered into bit positions 1 through 5 of input channel 15 of the CMC. Note that this input will cause a request for the KEYRUPT 1 program interrupt. If a key on the navigation panel DSKY is pressed, the five-bit code associated with that key is entered into bit position 1 through 5 of input channel 16 of the CMC. Note that this input will cause a request for the KEYRUPT 2 program interrupt. The function of the keys is as follows:

Pushbutton	Function
0 through 9 pushbuttons	Enters numerical data, noun codes, and verb codes into the CMC.
+ and - pushbuttons	Informs the CMC that the following numerical data is decimal and indicates the sign of the data.
NOUN pushbutton	Conditions the CMC to interpret the next two numerical characters as a noun code and causes the noun display to be blanked.
CLR pushbutton	Clears data contained in the data displays. Pressing this key clears the data display currently being used. Successive depressions clear the other two data displays.

Pushbutton	Function
PRO pushbutton	Commands the CMC to the standby mode if power down program has been run. An additional depression commands the CMC to resume regular operation. If power down program has not been run, a depression commands CMC to proceed without data.
KEY REL pushbutton	Releases the DSKY displays initiated by keyboard action so that information supplied by the CMC program may be displayed.
ENTR pushbutton	Informs the CMC that the assembled data is complete and the requested function is to be executed.
RSET pushbutton	Extinguishes the DSKY caution indicators. (OPR ERR, PROG, RESTART, STBY and UPLINK ACTY).
VERB pushbutton	Conditions the CMC to interpret the next two numerical characters as a verb code and causes the verb display to be blanked.

Verb-Noun Formats. A noun may refer to a device, a group of computer registers or a group of counter registers, or it may simply serve to convey information without referring to any particular computer register. The noun is made up of 1, 2, or 3 components, each component being entered separately as requested by the verb code. As each component is keyed, it is displayed on the display panel with component 1 displayed in REGISTER 1, component 2 in REGISTER 2, and component 3 in REGISTER 3. There are two classes of nouns: normal and mixed. Normal nouns (codes 01 through 39) are those whose component members refer to computer registers which have consecutive addresses and use the same scale factor when converted to decimal. Mixed nouns (codes 40 through 99) are those whose component members refer to nonconsecutive addresses or whose component members require different scale factors when converted to decimal, or both.

A verb code indicates what action is to be taken. It also determines which component member of the noun group is to be acted upon. For example, there are five different load verbs. Verb 21 is required for loading the first component of the selected noun; verb 22 loads the second component; verb 23 loads the third component; verb 24 loads the first and second component; and verb 25 loads all three components. A similar component format is used in the display and monitor verbs. There are two general classes of verbs: regular and extended. The regular verbs (codes 01 through 39) deal mainly with loading, displaying, and monitoring data. The extended verbs (codes 40 through 99) are principally concerned with calling up internal programs whose function is system testing and operation.

Whenever data is to be loaded by the operator, the VERB and NOUN lights flash, the appropriate data display register is blanked, and the internal computer storage register is cleared in anticipation of data loading. As each numerical character is keyed in, it is displayed in the proper display register. Each data display register can handle only five numerical characters at a time (not including sign). If an attempt is made to key in more than five numerical characters at a time, the sixth and subsequent characters are simply rejected but they do appear in the display register.

The + and - keys are accepted prior to inserting the first numerical character of REGISTER 1, REGISTER 2, or REGISTER 3; if keyed in at any other time, the signs are rejected. If the 8 or 9 key is actuated at any time other than while loading a data word preceded by a + or - sign, it is rejected and the OPR ERR light goes on.

The normal use of the flash is with a load verb. However, there are two special cases when the flash is used with verbs other than load verbs.

- Machine Address to be Specified. There is a class of nouns available to allow any machine address to be used; these are called "machine address to be specified" nouns. When the "ENTR," which causes the verb-noun combination to be executed, senses a noun of this type the flash is immediately turned on. The verb code is left unchanged. The operator should load the complete machine address of interest (five-character octal). This is displayed in REGISTER 3 as it is keyed in. If an error is made in loading the address, the CLR key may be used to remove it. Pressing the ENTR key causes execution of the verb to continue.

- Change Major Mode. To change major mode, the sequence is VERB 37 ENTR. This causes the noun display register to be blanked and the verb code to be flashed. The two-character octal major mode code should then be loaded. For verification purposes, it is displayed as it is loaded in the noun display register. The entry causes the flash to be turned off, a request for the new major mode to be entered, and new major mode code to be displayed in the PROG display register.

  The flash is turned off by any of the following events:

- Final entry of a load sequence.
- Entry of verb "proceed without data" (33) or depression of PRO pb.
- Entry of verb "terminate" (34).

It is important to conclude every load verb by one of the aforementioned three, especially if the load was initiated by program action within the computer. If an internally initiated load is not concluded validly, the program that initiated it may never be recalled. The "proceed without data" verb is used to indicate that the operator is unable to, or does not wish to, supply the data requested, but wants the initiating program to continue as best it can with old data. The "terminate" verb is used to indicate that the operator chooses not to load the requested data and also wants to terminate the requesting routine.

Keyboard Operation

The standard procedure for the execution of keyboard operations consists of a sequence of seven key depressions:

VERB V_2 V_1 NOUN N_2 N_1 ENTR

Pressing the VERB key blanks the two verb lights on the DSKY and clears the verb code register in the CMC. The next two numerical inputs are interpreted as the verb code. Each of these characters is displayed by the verb lights as it is inserted. The NOUN key operates similarly with the DSKY noun lights and CMC noun code register. Pressing the ENTR key initiates the program indicated by the verb-noun combination displayed on the DSKY. Thus, it is not necessary to follow a standard procedure in keying verb-noun codes into the DSKY. It can be done in reverse order, if desired, or a previously inserted verb or noun can be used without re-keying it. No action is taken by the CMC in initiating the verb-noun-defined program until the ENTR key is actuated. If an error is noticed in either the verb code or noun code, prior to actuation of the ENTR key, it can be corrected simply by pressing the corresponding VERB or NOUN key and inserting the proper code. The ENTR key should not be actuated until it has been verified that the correct verb and noun codes are displayed.

If the selected verb-noun combination requires data to be loaded by the operator, the VERB and NOUN lights start flashing on and off (about once per second) after the ENTR key is pressed. Data is loaded in five-character words and, as it is keyed in, it is displayed character-by-character in one of the five-position data display registers; REGISTER 1, REGISTER 2, or REGISTER 3. Numerical data is assumed to be octal unless the five-character data word is preceded by a plus or minus sign, in which case it is considered to be decimal. Decimal data must be loaded in full five-numeral character words (no zeros may be left out); octal data may be loaded with high-order zeros left out. If a decimal is used for any component of a multicomponent load verb, it must be used for all components of that verb. In other words, no mixing of octal and decimal data is permitted for different components of the same load verb. The ENTR key must be pressed after each data word. This tells the program that the numerical word being keyed in is complete. The on-off flashing of the VERB-NOUN lights terminates after the last ENTR key actuator of a loading sequence.

The CLR key is used to remove errors in loading data as it is displayed in REGISTER 1, REGISTER 2, or REGISTER 3. It does nothing to the PROG, NOUN or VERB lights. (The NOUN lights are blanked by the NOUN key, the VERB lights by the VERB key.) For single-component load verbs or "machine address to be specified" nouns, the CLR key depression performs the clearing function on the particular register being loaded, provided that the CLR key is depressed before the ENTR key. Once the ENTR key is depressed, the CLR key does nothing. The only way to correct an error after the data is entered for a single-component load verb is to begin the load verb again. For two- or three-component load verbs, there is a CLR backing-up feature. The first depression of the CLR key clears whichever register is being loaded. (The CLR key may be pressed after any character, but before its entry.) Consecutive CLR key actuations clear the data display register above the current one until REGISTER 1 is cleared. Any attempt to back up (clear) beyond REGISTER 1 is simply ignored. The CLR backing up function operates only on data pertinent to the load verb which initiated the loading sequence. For example, if the initiating load verb were a "write second component into" type only, no backing up action would be possible.

The numerical keys, the CLR key, and the sign keys are rejected if depressed after completion (final entry) of a data display or data load verb. At such time, only the VERB, NOUN, ENTR, RSET, or KEY REL inputs are accepted. Thus, the data keys are accepted only after the control keys have instructed the program to accept them. Similarly, the + and - keys are accepted only before the first numerical character of REGISTER 1, REGISTER 2, and REGISTER 3 is keyed in, and at no other time. The 8 or 9 key is accepted only while loading a data word which is preceded by a + or - sign.

The DSKY can also be used by internal computed programs for subroutines. However, any operator keyboard action (except RSET) inhibits DSKY use by internal routines. The operator retains control of the DSKY until he wishes to release it. Thus, he is assured that the data he wishes to observe will not be replaced by internally initiated data displays. In general, it is recommended that the operator release the DSKY for internal use when he has temporarily finished with it; this is done by pressing the KEY REL key.

2.2.3.3 Optical Subsystem.

The optical subsystem is used for taking precise optical sightings on celestial bodies and for taking fixes on landmarks. These sightings are used for aligning the IMU and for determining the position of the spacecraft. The system includes the navigational base, two of the five CDUs, parts of the power and servo assembly, controls and displays, and the optics, which include the scanning telescope (SCT) and the sextant (SXT).

2.2.3.3.1 Optics.

The optics consist of the SCT and the SXT mounted in two protruding tubular sections of the optical base assembly. The SCT and SXT shaft axes are aligned parallel to each other and afford a common line-of-sight (LOS) to selected targets. The trunnion axes may be parallel or the SCT axis may be offset, depending upon the mode of operation.

The sextant is a highly accurate optical instrument capable of measuring the included angle between two targets. Angular sightings of two targets are made through a fixed beam splitter and a movable mirror located in the sextant head. The sextant lens provides 1.8-degree true field-of-view with 28X magnification. The movable mirror is capable of sighting a target to 50 degrees LOS from the shaft axis. The mechanical accuracy of the trunnion axis is twice that of the LOS requirement because of mirror reflection which doubles any angular displacement in trunnion axis.

The scanning telescope is similar to a theodolite in its ability to accurately measure elevation and azimuth angles of a single target using an established reference. The lenses provide 60-degree true field-of-view at 1X magnification. The telescope allowable LOS errors are one minute of arc-rms in elevation with maximum repeatability of 15 arc-seconds and approximately 40 arc-seconds in shaft axis.

2.2.3.3.2 Coupling Data Unit.

The identical coupling data unit (CDU) used in the ISS is also used as part of the OSS. Two channels of the CDU are used, one for the SXT

shaft axis and one for the SXT trunnion axis. These CDU channels repeat the SXT shaft and trunnion angles and transmit angular change information to the CMC in digital form. The angular data transmission in the trunnion channel is mechanized to generate one pulse to the CMC for 5 arc-seconds of movement of the SXT trunnion which is equivalent to 10 arc-seconds of SLOS movement. The shaft CDU channel issues one pulse for each 40 arc-seconds of shaft movement. The location of the SXT shaft and trunnion axes are transmitted to the CDUs through 16X and 64X resolvers, located on the SXT shaft and trunnion axes, respectively. This angular information is transmitted to the CDUs in the form of electrical signals proportional to the sine and cosine of 16X shaft angle and 64X trunnion angle. During the computer mode of operation, the CDU provides digital-to-analog conversion of the CMC output to generate an a-c input to the SXT shaft and trunnion servos. This analog input to the SXT axes will drive the SLOS to some desired position. In addition, the OSS channels of the CDU perform a second function on a time-sharing basis. During a thrust vector control function, these channels provide digital-to-analog conversion between the CMC and the service propulsion system (SPS) gimbals.

2.2.4 OPERATIONAL MODES.

The PGNCS has two systems, six inertial subsystem (ISS), and three optical subsystem (OSS) modes. The system modes are listed as follows:

- Saturn takeover
- Thrust vector control.

The ISS modes are listed as follows:

- IMU turn-on
- IMU cage
- Coarse align
- Fine align
- Attitude error
- Inertial reference.

The OSS modes are listed as follows:

- Zero optics
- Manual control
- Computer control.

The moding of the system and ISS is controlled by the CDU with the exception of one mode, a cage switch on the main display and control panel. All other modes must be commanded by the CMC through the issuance of discrete moding commands to the CDU.

G&N

The modes of operation for the OSS are selected by the astronaut using controls located on the indicator control panel.

2.2.4.1 S-IVB Takeover.

The S-IVB takeover capability provides steering signals to the Saturn instrument unit autopilot. There are two modes of operation, automatic and manual. The automatic mode provides the backup capability of issuing steering commands to the IU during the boost phase. This mode is initiated by positioning the LAUNCH VEHICLE GUIDANCE switch on the main display and control panel to CMC and during the boost monitor program only. This switch arms the S-IVB takeover relay with 28 vdc and issues a discrete to the CMC. The CMC, on recognition of this input discrete, switches to a control routine which generates an S-IVB takeover discrete. The S-IVB takeover discrete allows the relay in the mode module to energize, closing the interface between the DAC and the S-IVB instrument unit.

Normally the boost monitor program monitors the CDUs, computes the difference between the desired attitude (determined by a stored polynominal) and the actual attitude, and displays the error on the FDAI. During the takeover mode the commands are computed by taking the error (difference between polynominal and actual attitude) at takeover and storing as a bias. This value is subtracted from the actual error computed on succeeding cycles and is used to issue steering commands that attempt to maintain a constant error equal to that existing at takeover.

The manual mode provides the capability of issuing rotation control commands, through the CMC, to the instrument unit. The manual mode is initiated by placing the LAUNCH VEHICLE GUIDANCE switch to the CMC position and enabling the RCS digital autopilot with an extended verb. The switch arms the S-IVB takeover relay with 28 vdc and issues a discrete to the computer. The CMC, on recognition of this discrete and the RCS digital autopilot enabled, generates the S-IVB takeover discrete.

If either rotation control is placed to a pitch, yaw, or roll breakout position, the CMC issues an error-counter-enable discrete to the CDU. The error-counter-enable discrete is buffered in the moding module, modified by the digital mode module finally allowing the error counters to be enabled. The CMC then generates a $\pm\theta_c$ pulse train to the appropriate error counter where it is accumulated and converted to a ±d-c output signal by the DAC. The ±d-c signal is applied to the S-IVB IU as a 0.5°/sec ± pitch or ± yaw rate command.

When the rotation control is returned to the null position, the CMC inhibits the error-counter-enable discrete to the CDU which causes the error counter to reset. This results in a 0-vdc output signal from the DAC which is applied to the S-IVB IU as a 0°/sec roll, pitch, or yaw rate command.

2.2.4.2 Thrust Vector Control.

This system mode is initiated by CMC program control.

The CMC commands a TVC discrete which energizes the TVC relay closing the interface between the CDU DAC and the SPS gimbal servo amplifiers.

The computer also issues an OSS error-counter enable and an ISS error-counter enable. The computer, when all operating requirements are met, issues an SPS engine-on command.

The ISS read counters are repeating the gimbal angle changes indicating to the CMC the present spacecraft attitude. The accelerometers provide the program with ΔV inputs. These data are used to compute an attitude error and a SPS steering signal.

The attitude error is converted to a pulse train which is used to increment the CDU ISS error counters. The contents of these counters are converted to analog and displayed as they were in the attitude error display mode. The read counter input to the error counter is inhibited, allowing the error counter to be incremented or decremented only by CMC commands.

The OSS error counters are incremented by a $\Delta\theta$ command proportional to the steering signals required to steer the spacecraft on the proper trajectory. The error counter can operate completely independent of the read counter circuitry so the condition of the OSS is immaterial to this operation. The error counter contents are converted to analog 800 cps and then to a ±d-c voltage in the CDU OSS DAC. The pitch or yaw steering signal is routed through the TVC relay in the mode module to the SPS gimbal servo amplifiers. The TVC mode is complete when the spacecraft reaches the required velocity and the engine-off discrete is issued by the CMC. Each $\Delta\theta_c$ pulse from the CMC changes the SPS gimbals by 85 arc-seconds.

2.2.4.3 IMU Turn-On Mode.

The purpose of the IMU turn-on mode is to initialize the ISS by driving the IMU gimbals to zero, and clearing and inhibiting the CDU read counters and error counters. The IMU turn-on mode is initiated

by applying IMU operate power to the subsystem. The computer issues two CDU discretes required for this mode, CDU zero and coarse align. The computer also issues the turn-on delay complete discrete to the ISS after 90 seconds.

When IMU operate power is applied to the subsystem, the computer receives an ISS power-on discrete and a turn-on delay request. The computer responds to the turn-on delay request by issuing the CDU zero and coarse align discretes to the CDU. To prevent PIPA torquing for 90 seconds during the IMU turn-on mode, an inhibit is applied to the pulse torque power supply. This same inhibit is present when a computer warning has been issued. The CDU zero discrete clears and inhibits the read counters and error counters. The ISS operate power (+28 vdc) is routed through the de-energized contacts of the auto cage control relay to energize the cage relay. A 0-vdc signal, through the energized contacts of the cage relay, energizes the coarse-align relay. The energized contacts of the coarse-align relay switch the gimbal servo amplifier demodulator reference from 3200 cps to 800 cps, and close the IMU cage loop through the energized contacts of the cage relay. The coarse-align relay is held energized by the CDU coarse-align discretes and the energized contacts of the cage relay. The IMU gimbals will drive to the zero reference position using the sine output of the 1X gimbal resolvers (sin θ).

After 90 seconds, the computer issues the ISS turn-on delay complete discrete which energizes the ISS turn-on control relay. The auto cage control relay is energized by the ISS turn-on control relay. The ISS turn-on control relay then locks up through the energized contacts of the auto cage control relay. Energizing the auto cage control relay also removes the turn-on delay request and de-energizes the cage relay. This removes the sin θ signal and applies the coarse-align output to the gimbal servo amplifier. Energizing the ISS turn-on control relay removes the pulse torque power supply inhibit. The 90-second delay enables the gyro wheels time to reach their operating speed prior to closing the stabilization loops. The pulse torque power supply inhibit prevents accelerometer torquing during the 90 seconds.

2.2.4.4 IMU Cage Mode.

The IMU cage mode is an emergency mode which (1) allows the astronaut to recover a tumbling IMU by setting the gimbals to zero, and (2) to establish an inertial reference. The IMU cage mode can also be used to establish an inertial reference when the CSS is not activated.

The IMU cage mode is manually initiated by closing the spring-loaded cage switch on the main display and control panel for sufficient time to allow the IMU gimbals to settle at the zero position (5 seconds maximum). The IMU gimbal zeroing can be observed on the FDAI.

If the mode is commanded to recover a tumbling IMU after the IMU turn-on mode is completed, closing the IMU cage switch will cause the IMU gimbals to drive to zero. When the switch is released, the ISS will enter the inertial reference mode.

If the IMU cage mode is commanded to establish an inertial reference with the CSS in standby or off, the closing of the IMU cage switch will cause the IMU gimbals to drive to zero. When the switch is released, the inertial reference mode will be established.

Closing the IMU cage switch energizes the cage and coarse-align relays, which apply the sin θ signals to the gimbal servo amplifier, and sends an IMU cage discrete to the computer. Releasing the switch causes the cage and coarse-align relays to de-energize. When the coarse-align relay is de-energized, the stabilization loops are closed. The computer, upon receiving the IMU cage signal, discontinues sending all of the following discretes and control signals:

- Error-counter enable (OSS)
- Error-counter enable (ISS)
- Coarse-align enable
- TVC enable
- SPS engine on (CSM only)
- Gyro-command enable (torquing)
- ±X and/or ±Y optics CDU - D/A
- ±X (outer), ±Y (inner), ±Z (middle) IMU CDU - D/A
- ±X, ±Y, ±Z gyro select
- Gyro set pulses.

The IMU cage mode should not be used indiscriminately. It is intended only as an emergency recovery function for a tumbling IMU. During the IMU cage mode, IMU gimbal rates are sufficient to cause the gyros to be driven into their rotational and radial stops because of no CDU rate limiting. This action causes both temporary and permanent (if gyro torquing was in process during cage) bias shifts on the order of several MERU.

2.2.4.5 IMU Coarse Align.

The coarse-align mode of operation is mechanized to allow the computer to rapidly align the IMU to a desired position with a limited degree of accuracy. The computer issues two discretes to the CDU in this mode, coarse-align and error-counter enable.

The coarse-align discrete is routed through the moding module where it is buffered. One buffered output provides a ground path to the coarse-align relay energizing the relay. The energized relay opens the

gyro preamp output, replaces the normal 3200-cps demodulator reference with an 800-cps reference, and routes the 800-cps coarse-align output from the DAC into the gimbal servo amplifier demodulator, thereby allowing any 800-cps signal generated within the DAC to drive the gimbal until the DAC output is zero vrms.

The buffered coarse-align discrete and error-counter-enable discrete are routed from the moding module to the digital mode module for logical manipulations. The discretes at 0-vdc level are accepted by the error counter and logic module as moding commands enabling the error counter, and allowing the transfer of $\Delta\theta_g$ angles from the read counter to the error counter.

After the logic circuitry has been set up to accept commands from the computer, the CMC will begin transmitting $\pm\Delta\theta_c$ pulse trains at 3200 pps. These pulses, each equivalent to a change in gimbal angle of 160 arc-seconds, are accumulated in the error counter. The nine stages of the error counter are used solely to control ladder switches in the digital-to-analog converter module.

The $\Delta\theta_c$ pulse train is routed through a buffer stage in the DAC. The first $\Delta\theta_c$ pulse arriving at the EC&L logic will determine the direction the counter is to count, and will also provide a DAC-polarity control to the DAC. The polarity control provides an in-phase or an out-of-phase reference to the resistive ladder network through switches selected by the nine-bit error counter. An 800-cps analog signal will be generated at the ladder, the amplitude of which is dependent on the error counter content and the phase on the polarity of the input command $\Delta\theta_c$.

The ladder output is mixed with the coarse- and fine-resolver errors, after nulling, from the coarse module and the main summing amplifier module, respectively. These errors are out of phase with the ladder output and will act as a degenerative feedback providing rate limiting to the coarse-align loop drive rates.

The 800-cps mixing amplifier output of the DAC is routed through the coarse-align relay into the gimbal servo amplifier, causing the gimbal to drive in the direction commanded by the CMC.

The changing gimbal angles are recognized by the error-detection circuits in the coarse module and the main summing amplifier. These detected errors, recognized by the error counter logic circuitry, allow the $\Phi 4$ pulse train at 6400 pps to increment the read counter. The incrementing read counter will close attenuation switches in the coarse, quadrant select, the main summing amplifier modules nulling the sine and cosine voltage inputs from 1X and 16X resolver into the error-detect circuits.

As the read counter is being incremented, the output of the first stage is routed through logic in the EC&L module, through a buffer in the DAC, and out to the CMC as an increase in gimbal angle of 40 arc-seconds. The output of the third stage of the counter, at 160 arc-seconds per pulse, is recognized in the EC&L logic as an incremental value to be entered into the error counter in the opposite direction to the commanded $\Delta\theta$. If $\Delta\theta$ is positive, the error counter is counted up and the $\Delta\theta_g$ from the read counter decrements the counter. For each read counter pulse into the error counter, the total content will decrease the DAC output and the rate of drive. When the number of digital feedback pulses equal the commanded pulse number, the error counter will be empty and the DAC output should be zero.

The limited read counter incrementing rate, and the fact that the fine error input to the DAC increases in proportion to $\theta - \psi$ as the drive rate exceeds the range controlled by the fine system, limits the gimbals rate of drive to a maximum of 35 degrees per second.

2.2.4.6 IMU Fine Align.

The fine-align mode of operation allows the computer to accurately align the IMU to a predetermined gimbal angle within seconds of arc. The computer does not command any CDU discretes during this mode of operation; therefore, the read counter circuitry will repeat the changing gimbal angles exactly as was done in the coarse-align mode. The computer will keep track of the gimbal angle to within 40 arc-seconds.

The commanding signals for the fine-align mode are generated in the time-shared, fine-align electronics. The computer first issues a torque-enable discrete which applies 28 vdc and 120 vdc to the binary current switch and the differential amplifier precision voltage reference circuit, allowing the circuit to become operative. The circuit switch is reset to allow a dummy current, which is equal to the torquing current, to flow. This allows the current to settle to a constant value prior to its being used for gyro torquing. A gyro is then selected for either plus or minus torquing. After the preceding discretes have been issued, the computer then sends set commands or fine-align commands to the set side of the current switch. The pulse turns on the selected plus or minus torque current to the gyro, causing the float to move. The resulting signal generator output causes the platform to be driven through an angle equal to the commanded angle. The CMC will receive inputs from the CDU read counter indicating the change in gimbal angle.

The number of torquing pulses sent from the CMC to the torquing electronics is computed, based on the angle of the gimbal at an instant of time and a desired alignment angle. The difference is converted into the number of pulses necessary to drive the gimbal through the difference

angle. Each pulse sent is equivalent to 0.615 arc-second of gimbal displacement. The required number of fine-align pulses is computed only once and is not recomputed based on the gimbal angle after the desired number of pulses have been sent. The fine-align loop operation is open-loop as far as the computer is concerned.

The fine-align pulses generated by the CMC are issued in bursts at a bit rate of 3200 pulses per second. The fine-align electronics will allow the torquing current to be on in the direction chosen by computer logic for the duration of the pulse burst.

2.2.4.7 Attitude Error Display Mode.

The attitude error display mode of the inertial subsystem allows the computer to display to the operator, in analog fashion, an attitude error. In this mode of operation, only the CDU error-counter-enable discrete is generated by the computer. In this mode of operation, the computer is again informed of the gimbal angle and any changes to it through the read counter and the analog-to-digital conversion associated with it. The read counter 2-degree output is routed through logic in the EC&L module through the DAC buffer to the CMC.

The computer is then aware of the present attitude of the spacecraft. The digital autopilot program has a computed desired attitude associated with the present time and position of the spacecraft. Any difference between the desired and actual is an attitude error. The attitude error is converted to $\Delta\theta_c$ pulses, each pulse being equivalent to 160 arc-seconds of error, which are sent to the error counter at a rate of 3200 pps. The error counter is incremented to contain the number of pulses commanded. The contents of the error counter are converted to an 800-cps error signal by the DAC. The phase of the DAC output is determined by logic in the EC&L module, based on whether the input command was a plus or minus $\Delta\theta$. The 800 cps with a maximum amplitude of 5 vrms zero or biphase is displayed on the attitude error needles of the FDAI as an attitude error. The digital feedback from the read counter to the error counter is disabled during this mode of operation allowing only the CMC-generated $\Delta\theta$ commands to increment or decrement the error counter.

The spacecraft attitude can also be displayed on the FDAI. This information is taken from the 1X gimbal angle resolver sine and cosine windings. Pitch, yaw, and roll can be displayed from the inner, middle, and outer gimbals, respectively.

2.2.4.8 Inertial Reference Mode.

The inertial reference mode of operation is a mode of operation in which no computer discretes are being issued by the computer to any part

of the ISS. This mode is used as a means of obtaining an inertial reference only. This reference is taken from the 1X gimbal angle resolver sine and cosine windings. The reference can be displayed on the FDAI or used as an input to the attitude set relays of the SCS.

In this mode of operation, the 25 IRIGs hold the stable platform inertially referenced. The CDU read counter will continuously monitor the changing gimbal angles because of spacecraft motion and indicate to the CMC the changing angles. The error counter and the DAC are not used in this mode of operation.

2.2.4.9 Zero Optics Mode.

During the zero optics mode, the shaft and trunnion axes of the SXT are driven to their zero positions by taking the outputs of the transmitting resolvers (1X and 64X in trunnion and 1/2X and 16X in shaft) and feeding them through the two-speed (2X) switches to the motor drive amplifier (MDA). The MDA in turn drives loops to null positions as indicated by zero output from the resolvers. The SCT shaft and trunnion axes follow to a zero position. After 15 seconds, the computer will issue a CDU zero discrete, and will initialize the shaft and trunnion counters in preparation for receiving new data from the CDU.

The zero optics mode is selected by the flight crew. Placing the ZERO switch to ZERO position will energize a relay in the PSA via a relay driver, which, in turn, will energize the two-speed switch. The computer is notified of the zero optics mode by a signal from the zero switch when the change from off to zero position occurs.

2.2.4.10 Manual Mode Operation.

The manual mode can be selected to operate under either direct hand control or resolved hand control. Independent control of the SCT trunnion is possible in both of these mode variations.

2.2.4.10.1 Manual Direct Operation.

When in this mode, the hand controller outputs are applied directly to the SXT shaft and trunnion motor drive amplifiers. Forward and back motion of the hand controller commands increasing and decreasing trunnion angles, and right and left motion of the hand controller commands increasing and decreasing shaft angles, respectively. The target image motion is in the R-M coordinate system, the position of which is dependent upon the position of the SXT shaft.

The apparent speed of the image motion can be regulated by the flight crew by selecting either low, medium, or high controller speed on

the indicator control panel. This regulates the voltage applied to the motor drive amplifier, $A_s^{\cdot}$ and $A_t^{\cdot}$; therefore, the shaft and trunnion drive rates. The maximum rates are approximately 20 degrees per second for the shaft and 10 degrees per second for the trunnion.

2.2.4.10.2 Slave Telescope Modes.

The slave telescope modes provide for alternate operation of the telescope trunnion while the SXT is being operated manually. The alternate modes are selected by the TELTRUN switch on the mode control panel. There are three possible selections, SLAVE to SXT, 0°, and 25°. With this switch in the SLAVE to SXT position, the SCT trunnion axis is slaved to the SXT trunnion; this is the normal operating position for the SCT. With the switch in the 0° position, the SCT trunnion is locked in a zero position by the application of a fixed voltage to the SCT trunnion 1X receiving resolver. This will cause this position loop to null in a zero orientation. Therefore, the centerline of the SCT 60-degree field-of-view is held parallel to the LLOS of the SXT.

With the switch in the 25° position, an external voltage is applied to the same 1X receiving resolver which will cause the SCT trunnion position loop to null out so that the centerline of the 60-degree field-of-view is offset 25 degrees (A_t of SCT at 12.5 degrees) from the LLOS of the SXT. This position of the SCT trunnion will allow the landmark to remain in the 60-degree field-of-view while still providing a total possible field-of-view of 110 degrees if the SCT shaft is swept through 360 degrees.

2.2.4.10.3 Manual Resolved Operation.

When in this mode, the hand controller outputs are put through a matrix transformation prior to being directed to the shaft and trunnion motor drive amplifiers. The matrix transformation makes the image motion correspond directly to the hand controller motion. This is up, down, right, and left motions of the hand controller command; the target image moves up, down, right, and left respectively, in the field of view. In other words, the image motion is in the X-Y spacecraft coordinate system. The matrix transformation takes place in two steps. The outputs of the hand controller are routed to the 1X resolver on the SXT shaft. Here the drive signals, $A_s^{\cdot}$ and $A_t^{\cdot}$, are transformed by the sine and cosine functions of the shaft angle (A_s). One of the two outputs of the 1X resolver is sent to the SXT trunnion motor drive amplifier. The second output is then resolved through the SLOS angle (A_{LOS}) so that the target image motion will be independent of SLOS angle. This is accomplished by the cosecant computing amplifier (CSC) and the 2X computing resolver located on the SXT trunnion axis. The net result is that the shaft drive rate, $A_s^{\cdot}$, is inversely proportional to the sine of the SLOS angle. The speed controller is also operational in this mode.

2.2.4.10.4 Optics-Computer Mark Logic.

The MARK and MARK REJECT buttons on the indicator control panel are utilized to instruct the computer that a navigational fix has taken place, and that SXT shaft and trunnion position and the time should either be recorded or rejected. The mark command is generated manually by the flight crew which energizes the mark relay. The mark relay transmits a mark command to the computer. If an erroneous mark is made, the mark reject button is depressed; this will generate a "mark reject" command to the computer.

2.2.4.10.5 Computer Mode Operation.

The computer-controlled operation is selected by placing the moding switch in computer position. The mechanization of this loop is chosen by the computer program that has been selected by the flight crew. The operation of the SXT under computer control is accomplished by completing the circuit from the CDU digital-to-analog converters (DAC) to the shaft and trunnion motor drive amplifier. The computer can then provide inputs to these amplifiers via a digital input to the CDU, which are converted in the DAC to an 800-cycle signal that can be used by the MDA. This mode is used when it is desired to look at a specific star for which the computer has the corresponding star coordinates. The computer will also know the attitude of the spacecraft from the position of the IMU gimbals and will, therefore, be able to calculate the position of the SXT axes required to acquire the star. The computer can then drive the shaft and trunnion of the SXT to the desired position via the DAC.

2.2.5 POWER DISTRIBUTION.

The guidance and navigation circuit breakers (panel 5) supply a-c and d-c power to switches on panels 5 and 100 and directly to the PSA and CMC. The panel 5 switch (G/N PWR) supplies AC1 or AC2 power to the PSA (figure 2.2-4) where it is routed to the dimmer power supply. The output of the dimmer power supply is provided to the following:

- Caution and warning lamp on LEB panel 122
- Star acquired lamp on LEB panel 122
- TPAC readout on LEB panel 122
- Optics (SCT and SXT) reticles

The panel 100 switches (G/N POWER - IMU and OPTICS) supply the d-c power to the PSA for power to the ISS, OPTICS and CDU power supplies. The IMU HTR and COMPUTER circuit breakers supply power to the ISS temperature control circuits and the CMC power supplies.

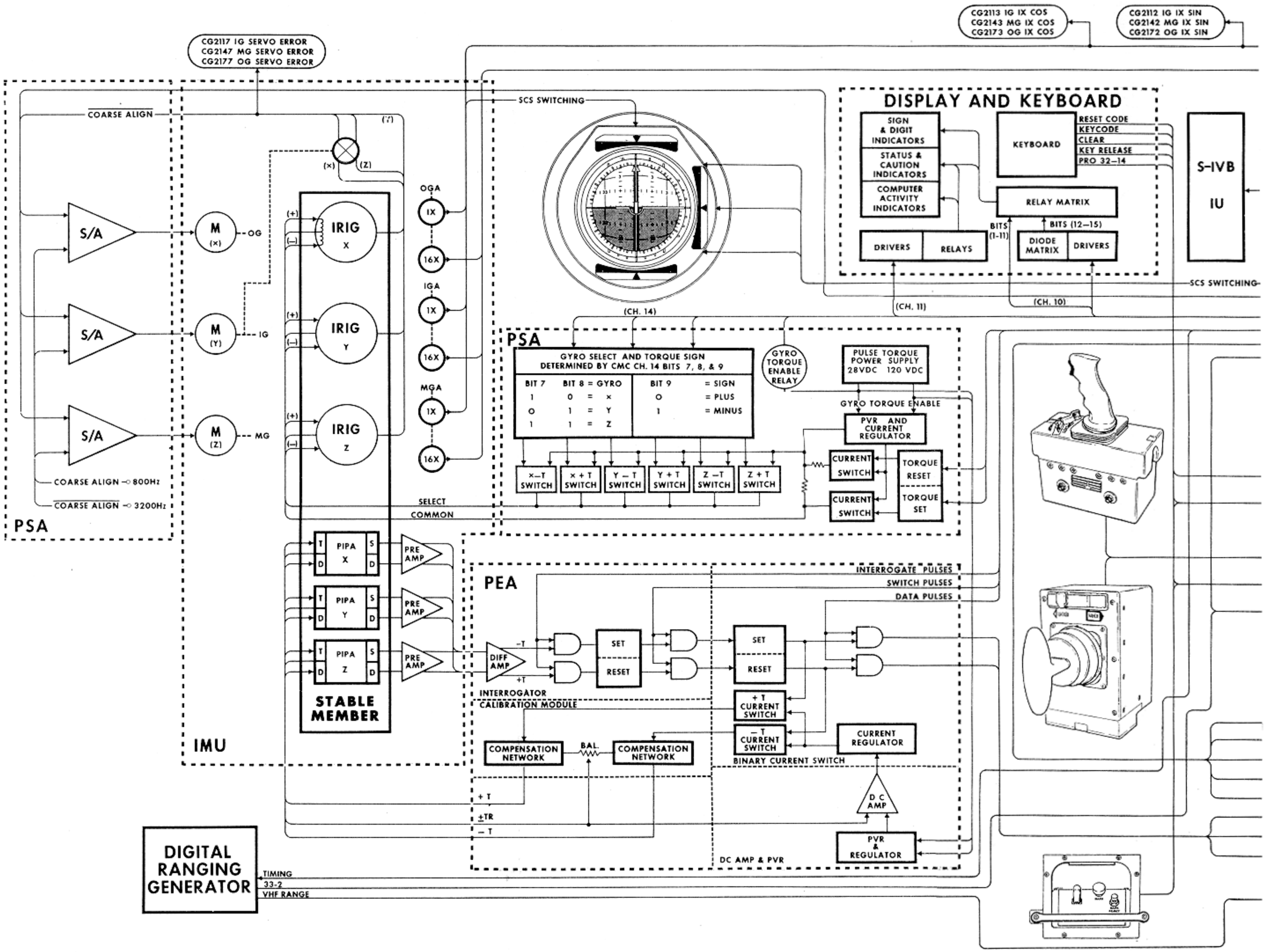

Figure 2.2-3. PGNCS Functional Diagram (Sheet 1 of 2)

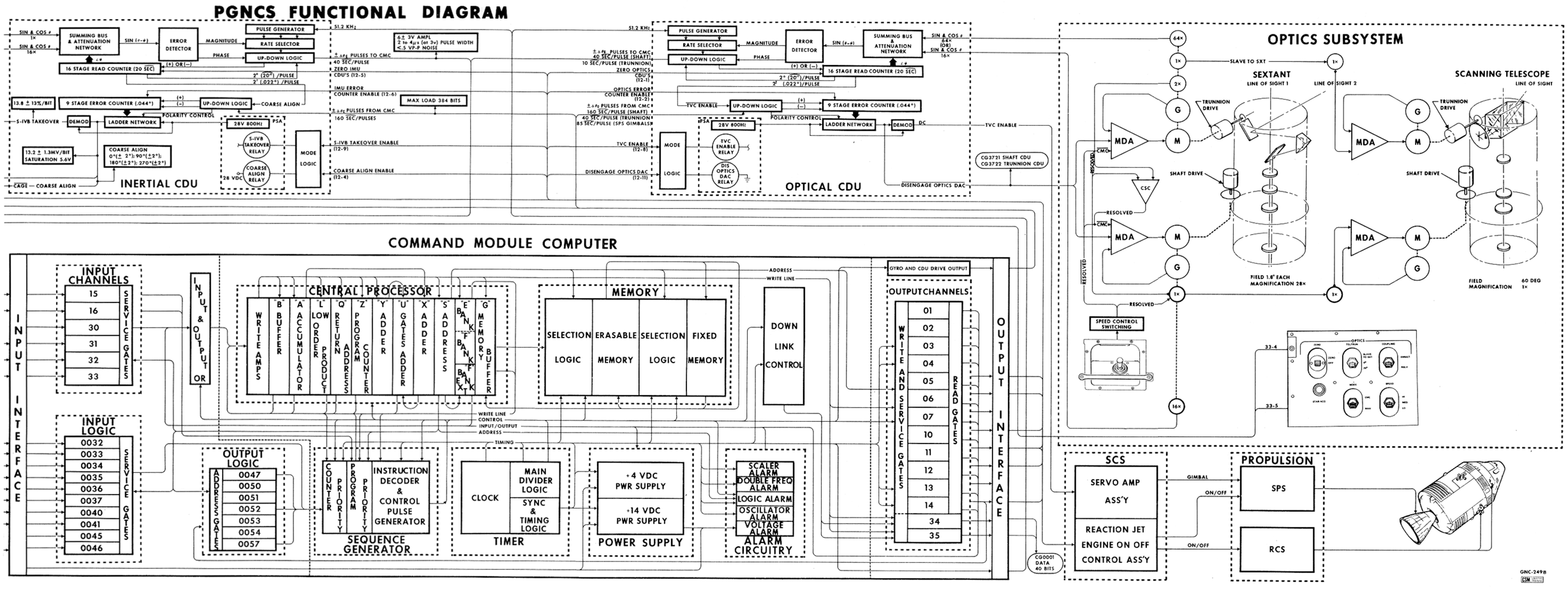

Figure 2.2-3. PGNCS Functional Diagram (Sheet 2 of 2)

G&N

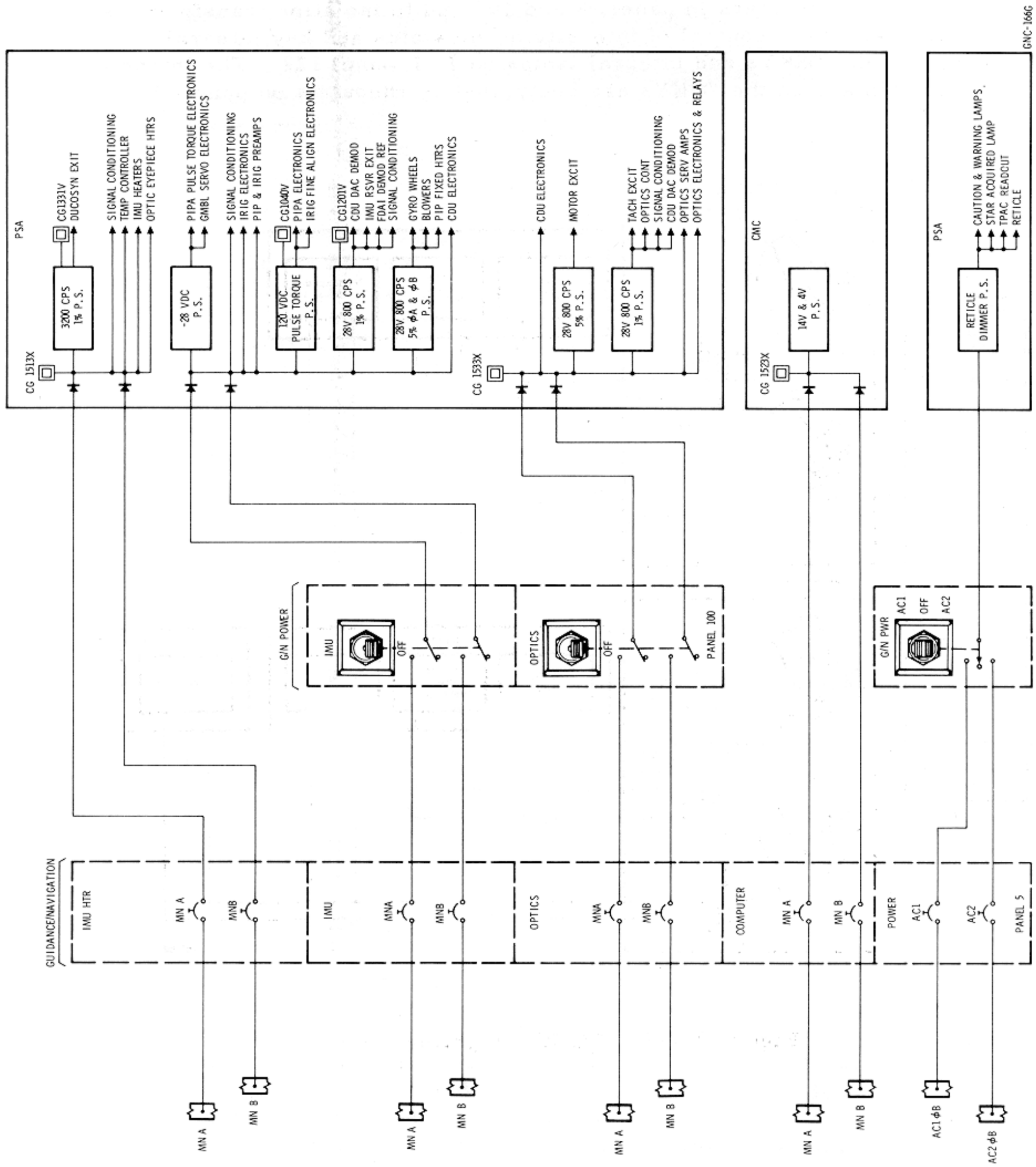

Figure 2.2-4. PGNCS Power Distribution

Circuit breakers on panel 226 supply a-c power to dimmer controls on panels 8 and 100 for lighting on the DSKYs and LEB panel 122. The circuit breakers (LMDC-AC1 and LEB AC2) supply the a-c power to variable transformers in panels 8 and 100 and to isolation transformers (figure 2.2-5) for control of intensity of the status and key integral lamps on the DSKYs and integral lamps on LEB panel 122. The intensity of the displays on the DSKYs are controlled by rheostats on panels 8 and 100.

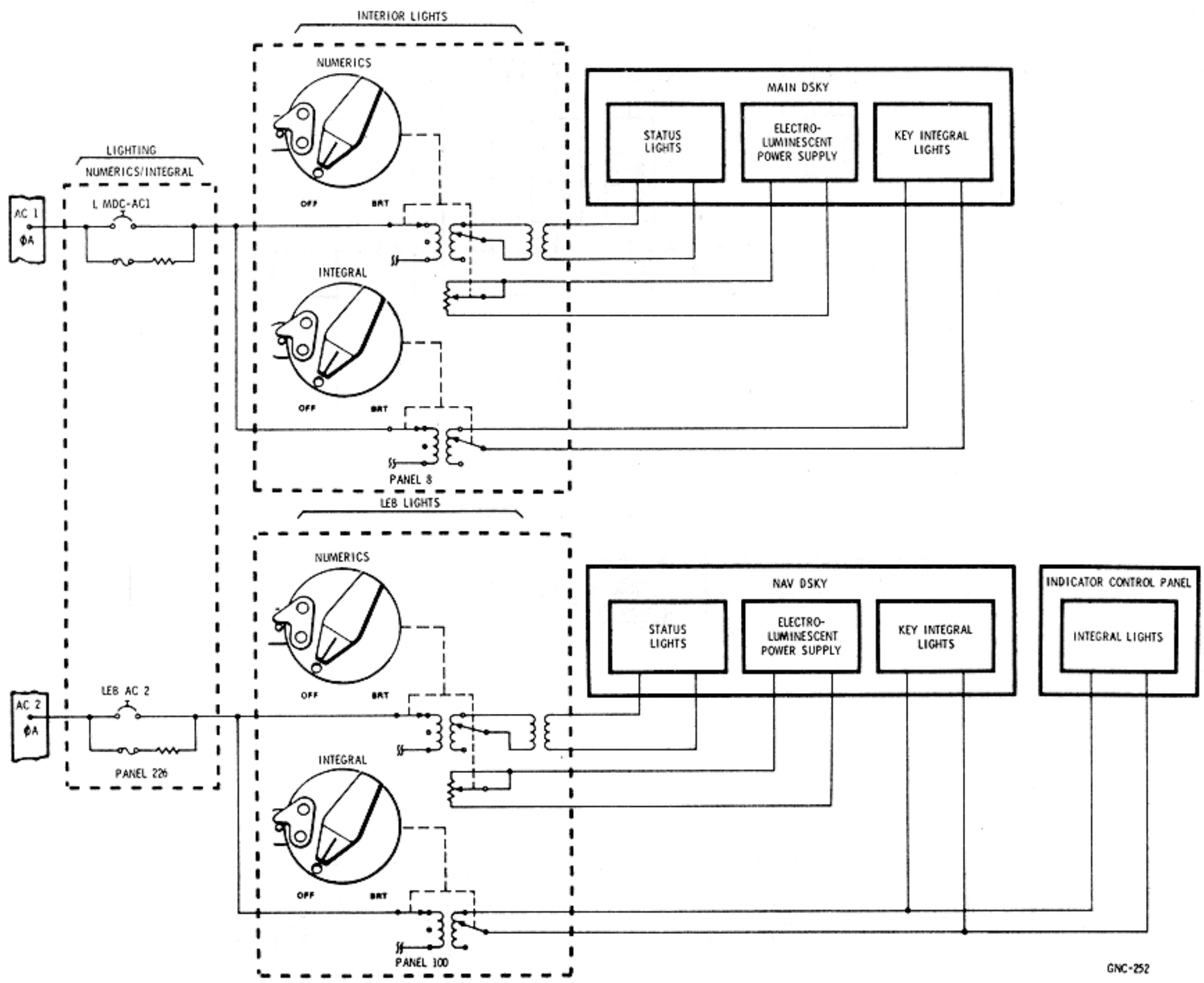

Figure 2.2-5. PGNCS Lighting

SECTION 2

SUBSECTION 2.3

STABILIZATION AND CONTROL SYSTEM (SCS) (SC 106 AND SUBS UNLESS OTHERWISE NOTED)

2.3.1 INTRODUCTION.

The stabilization and control subsystem (SCS) provides a capability for controlling rotation, translation, SPS thrust vector, and displays necessary for man in the loop control functions.

The SCS is divided into three basic subsystems: attitude reference, attitude control, and thrust vector control. These subsystems contain the elements which provide selectable functions for display, automatic and manual attitude control, and thrust vector control. All control functions are a backup to the primary guidance navigation and control subsystem (PGNCS). The SCS provides two assemblies for interface with the propulsion subsystem; these are common to SCS and PGNCS for all control functions. The main display and controls panel contains the switches used in selecting the desired display and control configurations.

The SCS interfaces with the following spacecraft subsystems:

- Telecommunications Subsystem—Receives all down-link telemetering from SCS.
- Electrical Power Subsystem—Provides primary power for SCS operation.
- Environmental Control Subsystem—Transfers heat from SCS electronics.
- Sequential Events Control Subsystem—Provides abort switching and separation enabling of SCS reaction control drivers and receives manual abort switch closure from the SCS.
- Orbital Rate Drive Electronics for Apollo and LM—Interfaces with the pitch axis of the FDAI ball to give a local vertical referenced display.
- Guidance Navigation and Control Subsystem:

  Provides roll, pitch, and yaw total attitude and attitude error inputs for display.

  Provides RCS on-off commands to the SCS interface assembly for attitude control.

Provides TVC servo commands to the SCS interface assembly for automatic thrust vector control

Provides automatic SPS on-off command to SCS interface assembly for ΔV control

Receives switch closure signals from the SCS translation and rotation controls.

- Entry monitor subsystem: the EMS provides SPS enabling/disabling discretes to the SCS thrust on-off logic for the SPS.

- Propulsion subsystem:

  The service propulsion subsystem receives thrust vector direction commands and thrust on-off commands from the SCS that can originate in the PGNCS or the SCS.

  The reaction control subsystem receives thrust on-off commands from the SCS that can originate in the PGNCS or the SCS.

Detailed descriptions of the SCS hardware, attitude reference subsystem, attitude control subsystem, and thrust vector control subsystem are contained in the following paragraphs.

2.3.2 CONTROLS, SENSORS, AND DISPLAYS.

As an introduction to the stabilization and control system (SCS) a brief description is given of the hardware comprising one complete system. A more detailed discussion follows for the hand controls, displays, and gyro assemblies. The configurations within the SCS resulting from panel 1 switch positions are also presented.

2.3.2.1 SCS Hardware.

The function of the SCS hardware shown in figure 2.3-1 is as follows:

- Electronic Control Assembly (ECA) - Contains the circuit elements required for summing, shaping, and switching of the rate and attitude error signals and manual input signals necessary for stabilization and control of the thrust vector and the spacecraft attitude.

- Reaction Jet and Engine ON-OFF Control (RJ/EC) - Contains the solenoid drivers and logic circuits necessary to control both the RCS automatic solenoid coils and SPS solenoid control valves.

- Electronic Display Assembly (EDA) - Provides the interface between the signal sources to be displayed and the FDAIs and GPI. The EDA also provides signal conditioning for telemetry of display signals.

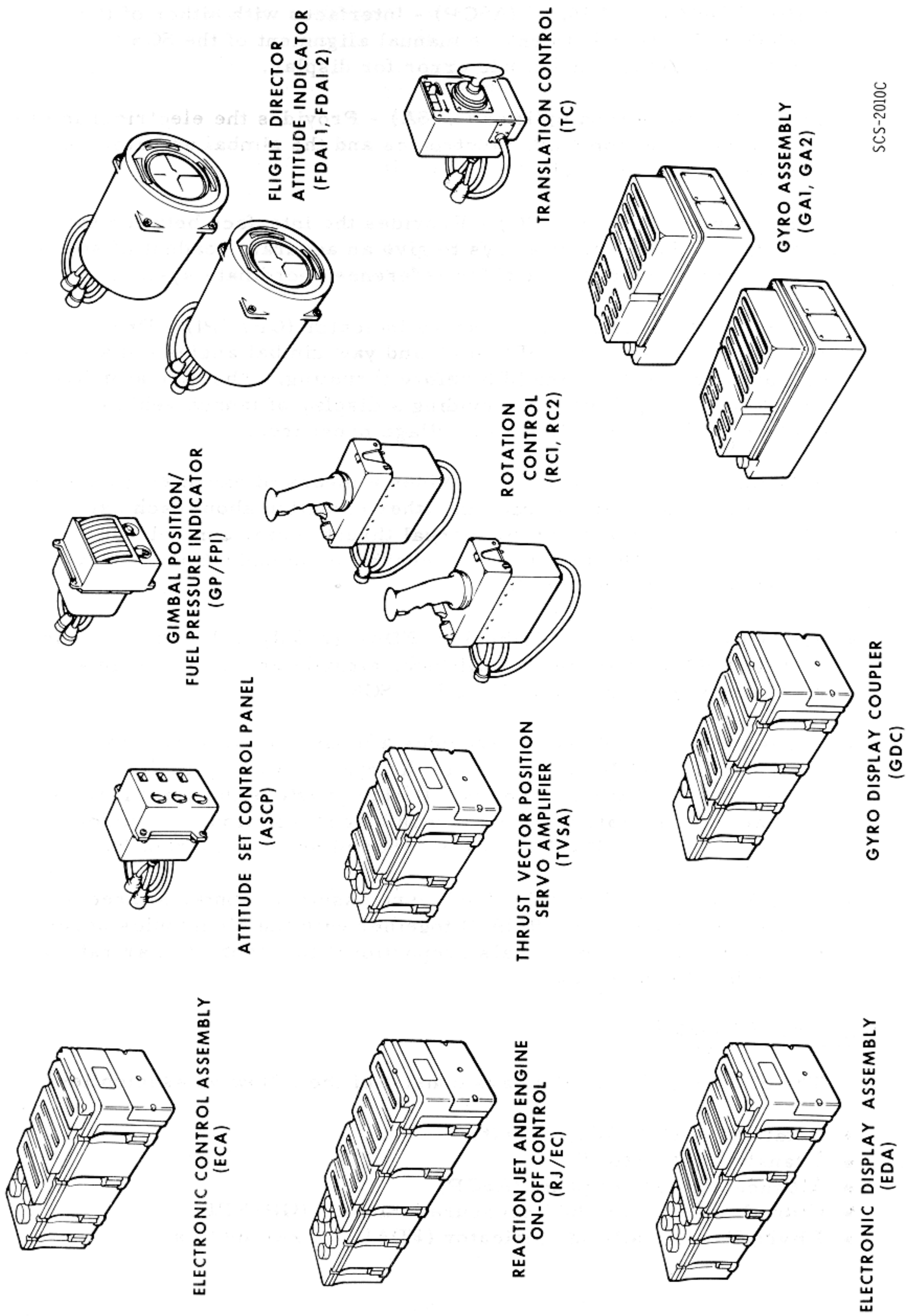

Figure 2.3-1. SCS Flight Hardware

- Attitude Set Control Panel (ASCP) - Interfaces with either of the total attitude sources to enable manual alignment of the SCS total attitude. Provides an attitude error for display.

- Thrust Vector Servoamplifier (TVSA) - Provides the electrical interface between the command electronics and the gimbal actuator for positioning the SPS engine.

- Gyro Display Coupler (GDC) - Provides the interface between the body rate sensors and displays to give an accurate readout of spacecraft attitude relative to a given reference coordinate system.

- Gimbal Position and Fuel Pressure Indicator (GP/FPI) - Provides a redundant display of the SPS pitch and yaw gimbal angles and a means of manually trimming the SPS before thrusting. The indicator has the alternate capability of providing a display of launch vehicle (S-II and S-IVB) propellant tank ullage pressures.

- Rotation Controls (RC) (2) - Provides a means of exercising manual control of spacecraft rotation in either direction about each axis. Also the RC may be used for manual thrust vector control. It provides the capability to control spacecraft communications with a push-to-talk trigger switch.

- Flight Director Attitude Indicator (FDAI) (2 Only) - Provides to the crew a display of spacecraft attitude, attitude error, and angular rate information from the PGNCS or SCS.

- Translation Control (TC) - Provides a means of exercising manual control over rectilinear motion of the spacecraft in both directions along the three spacecraft axes. It also provides the capability for manual abort initiation during launch by ccw rotation. Transfer of SC control from PGNCS to SCS is accomplished by cw rotation.

- Gyro Assemblies (GA) (2) - Each gyro assembly contains three body-mounted attitude gyros (BMAG) together with the electronics necessary to provide output signals proportional to either angular rate or to angular displacement.

2.3.2.2 Controls and Displays.

The SCS controls and displays consist of the following assemblies:

- Rotation control (RC) - 2 units
- Translation control (TC)
- Attitude set control panel (ASCP)
- Gimbal position and fuel pressure indicator (GP/FPI)
- Flight director attitude indicator (FDAI) - 2 assemblies

SCS

2.3.2.2.1 Rotation Control.

Two identical rotation controls (RCs) are provided. The controls are connected in parallel so that they operate in a redundant fashion without switching. Pitch commands are commanded about a palm-centered axis, yaw commands about the grip longitudinal axis, while roll commands result from a left-right motion (figure 2.3-2). Within the RC there are three command sources per axis:

a. Breakout Switches (±BO) - A switch closure occurs whenever the RC is moved 1.5 degrees from its null position. Separate switches are provided in each axis and for each direction of rotation. These six breakout switches are used to provide: command signals to the command module computer (CMC), SCS minimum impulses, acceleration commands, BMAG cage signals, and proportional rate command enabling.

b. Transducers - Transducers produce a-c signals proportional to the rotation control displacement from the null position. These signals are used to command spacecraft rotation rates during SCS proportional rate control and to command SPS engine gimbal position during manual thrust vector control (MTVC). One, two, or all three transducers can be used simultaneously, generating corresponding command signals.

c. Direct Switches - Redundant direct switches will close whenever the control is moved a nominal 11 degrees from its null position (hardstops limit control movement to ±11.5 degrees from null in all axes). Separate switches are provided in each axis and for each direction of rotation. Direct switch closure will produce acceleration commands through the RCS direct solenoids.

The rotation control is provided with a tapered female dovetail on each end of the housing. This dovetail mates with mounting brackets on the couch armrests. When attached to the armrests, the input axes are approximately parallel with spacecraft body axes. Figure 2.3-12 illustrates control motions about its axis and the resulting commands to the RCS, PGNCS, or SCS. A trigger-type push-to-talk switch is also located in the control grip. Redundant locking devices are provided on each control.

2.3.2.2.2 Translation Control.

The translation control provides a means of accelerating along one or more of the spacecraft axes. The control is mounted with its axes approximately parallel to those of the spacecraft. The spacecraft will accelerate along the X-axis with a push-pull motion, along the Y-axis by a left-right motion, and along the Z-axis by an up-down command (figure 2.3-3). Redundant switches close for each direction of control displacement. These switches supply discrete commands to the CMC and the RJ/EC. A mechanical lock is provided to inhibit these commands. In addition the T-handle may be rotated about the longitudinal axis:

a. The redundant clockwise (CW) switches will transfer spacecraft control from CMC to SCS. It may also transfer control between certain submodes within the SCS.

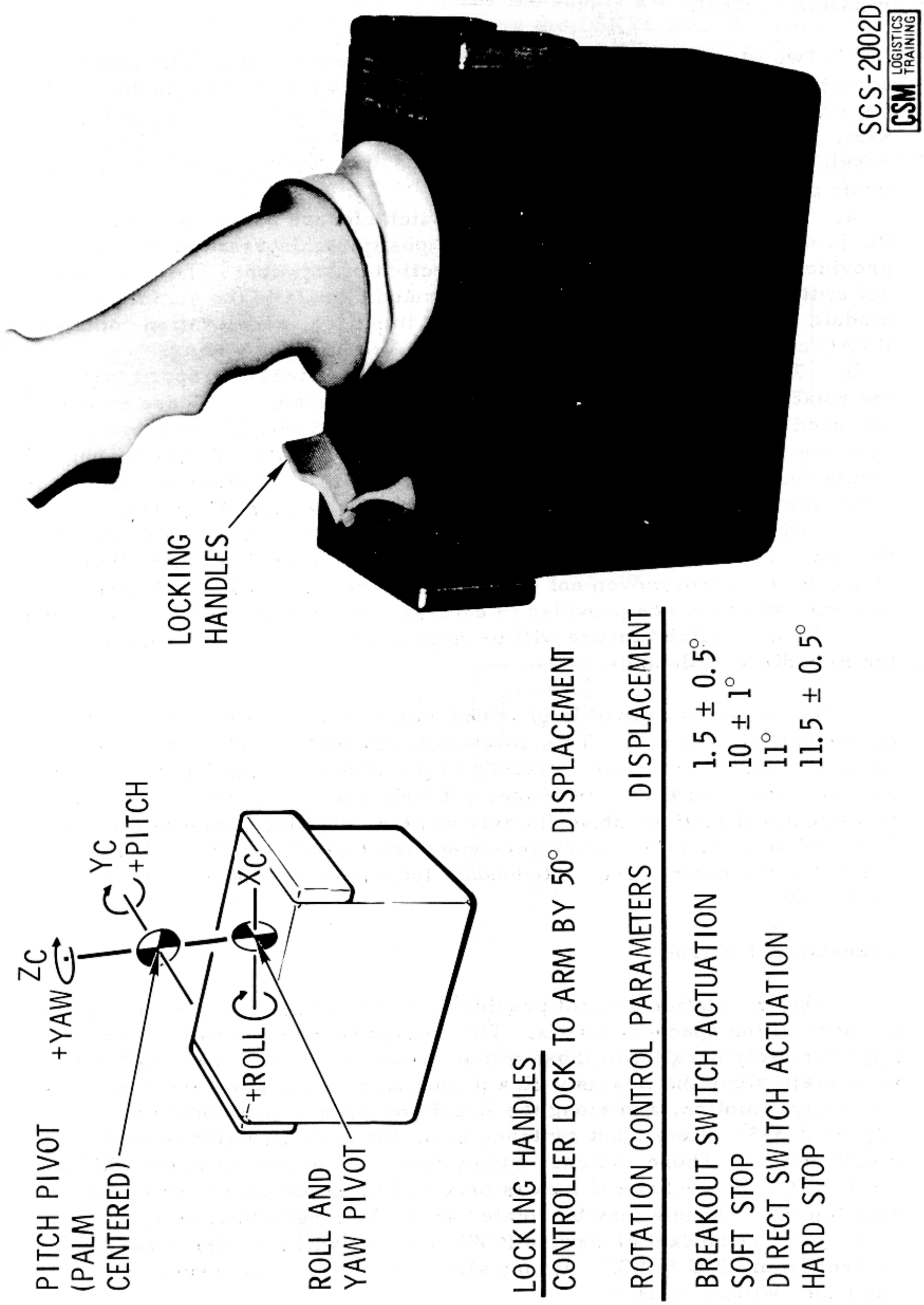

Figure 2.3-2. Rotation Control

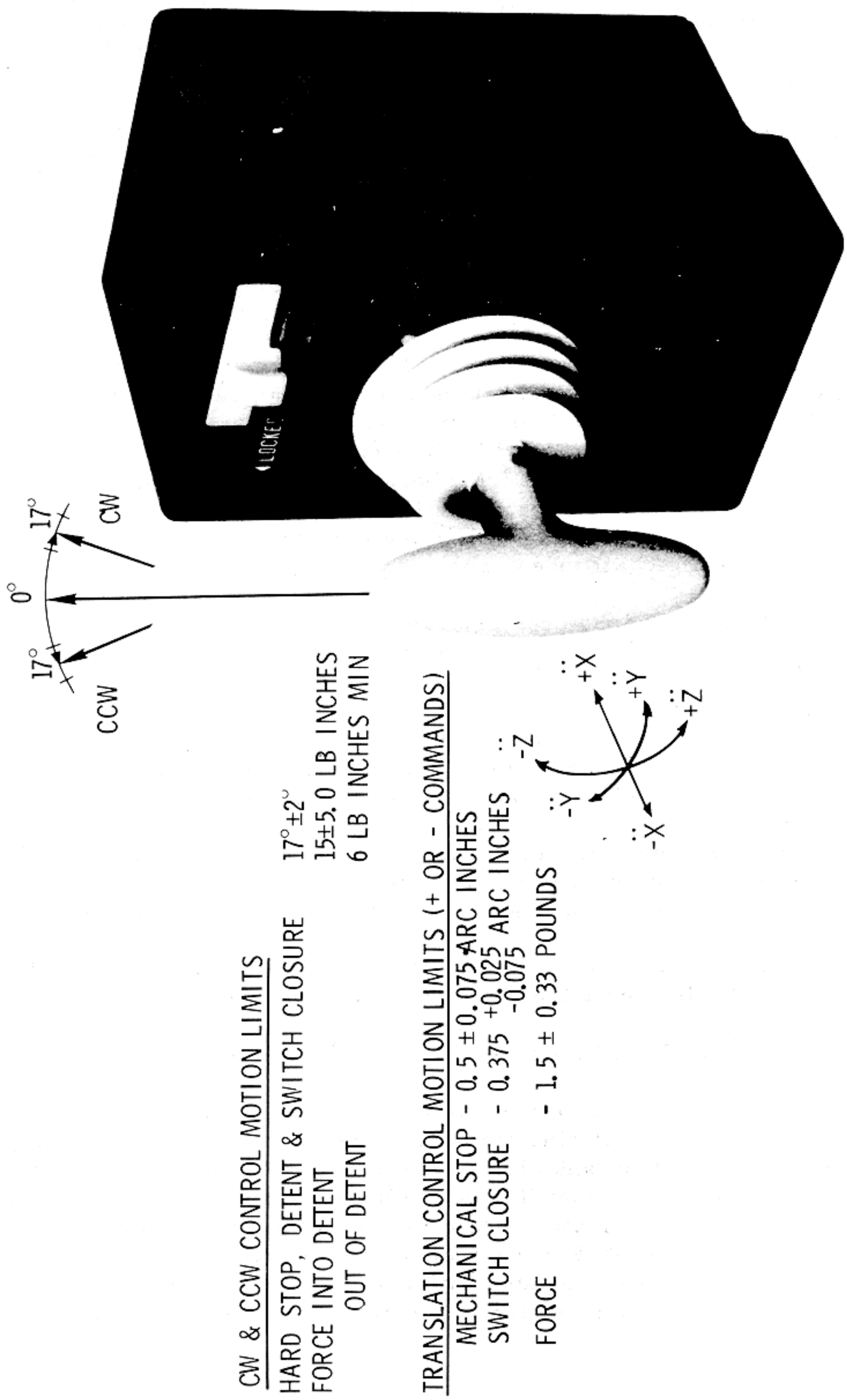

Figure 2.3-3. Translation Control

b. The redundant counterclockwise (CCW) switches provide for a manual abort initiation during the launch phase. A discrete signal from switch closure is fed to the master events sequence controller (MESC) which initiates other abort functions.

Neither the CW or CCW functions are inhibited by the locking switch on the front of the controller. The T-handle will remain in the CW or CCW detent position without being held, once it is rotated past approximately plus or minus 12 degrees.

2.3.2.2.3 Attitude Set Control Panel (ASCP).

The ASCP (figure 2.3-4) provides, through thumbwheels, a means of positioning differential resolvers for each of the three axes. The resolvers are mechanically linked with indicators to provide a readout of the dialed angles. The input signals to these attitude set resolvers are from either the IMU or the GDC. The inertial (Euler) attitude error output signals are sine functions of the difference angles between the desired attitude, set by the thumbwheels, and the input attitude from the GDC or IMU. The GDC Euler output can be used to either align the GDC or to provide fly-to indications on the FDAI attitude error needles.

Characteristics of the counters are:

a. Indicates resolver angles in degrees from electrical zero, and allows continuous rotation from 000 through 359 to 000 without reversing the direction of rotation.

b. Graduation marks every 0.2 degree on the units digit.

c. Pitch and roll are marked continuously between 0 and 359.8 degrees. Yaw is marked continuously from 0 to 90 degrees and from 270 to 359.8 degrees.

d. Readings increase for an upward rotation of the thumbwheels. One revolution of the thumbwheel produces a 20-degree change in the resolver angle and a corresponding 20-degree change in the counter reading.

The counter readouts are floodlighted and the nomenclature (ROLL, PITCH, and YAW) is backlighted by electroluminescent lighting.

2.3.2.2.4 Gimbal Position and Fuel Pressure Indicator (GP/FPI).

The GP/FPI (figure 2.3-5) contains redundant indicators for both the pitch and yaw channels. During the boost phases, the indicators display S-II and S-IVB propellant tank ullage pressures. S-II fuel pressure (or S-IVB oxidizer pressure depending on the launch vehicle configuration) is on the redundant pitch indicators while S-IVB fuel pressure is on the two yaw indicators. The gimbal position indicator consists of two dual servometric meter movements, mounted within a common hermetically sealed case. Scale illumination uses electroluminescent lighting panels.

SCS-2102C

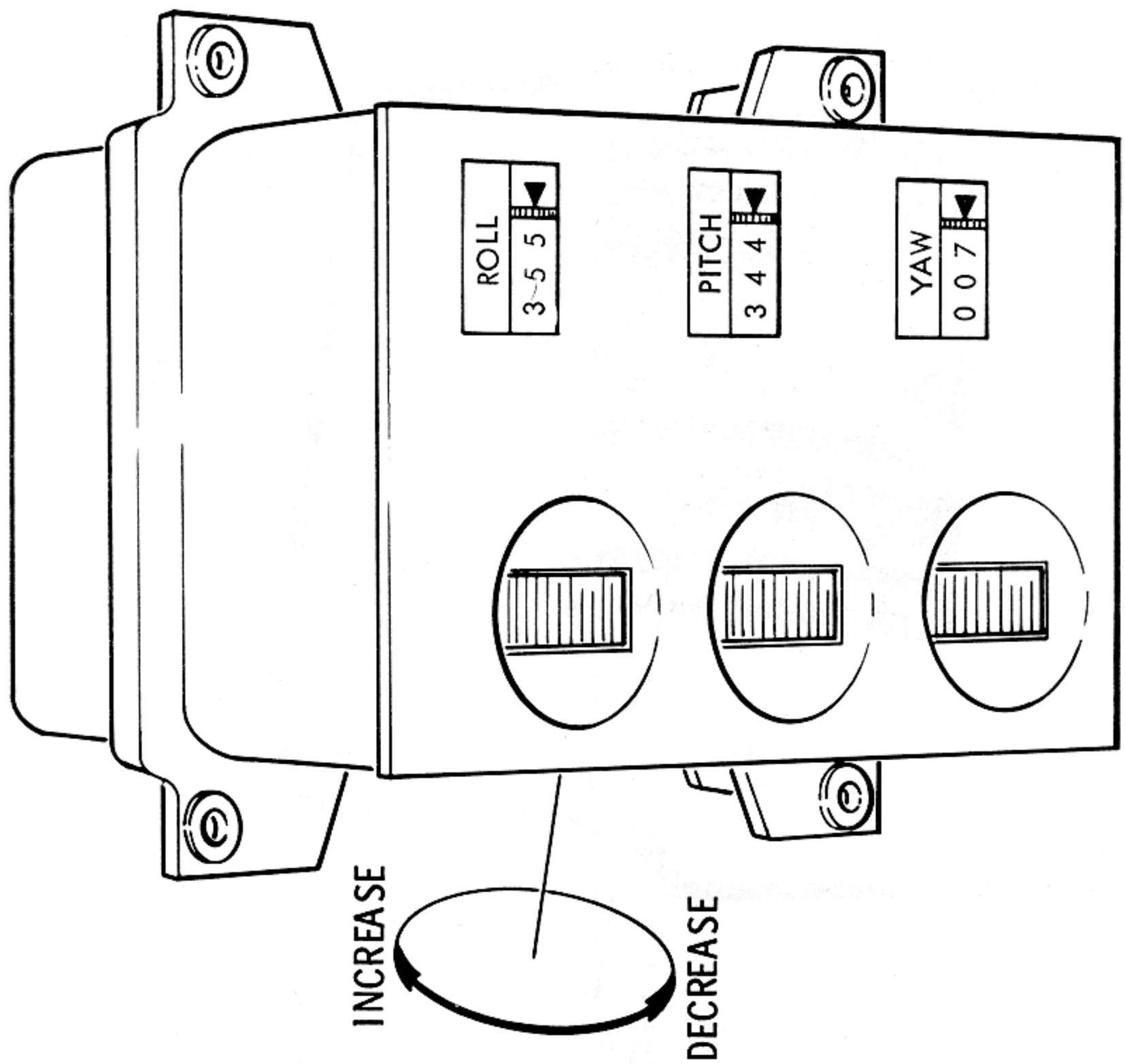

Figure 2.3-4. Attitude Set Control Panel

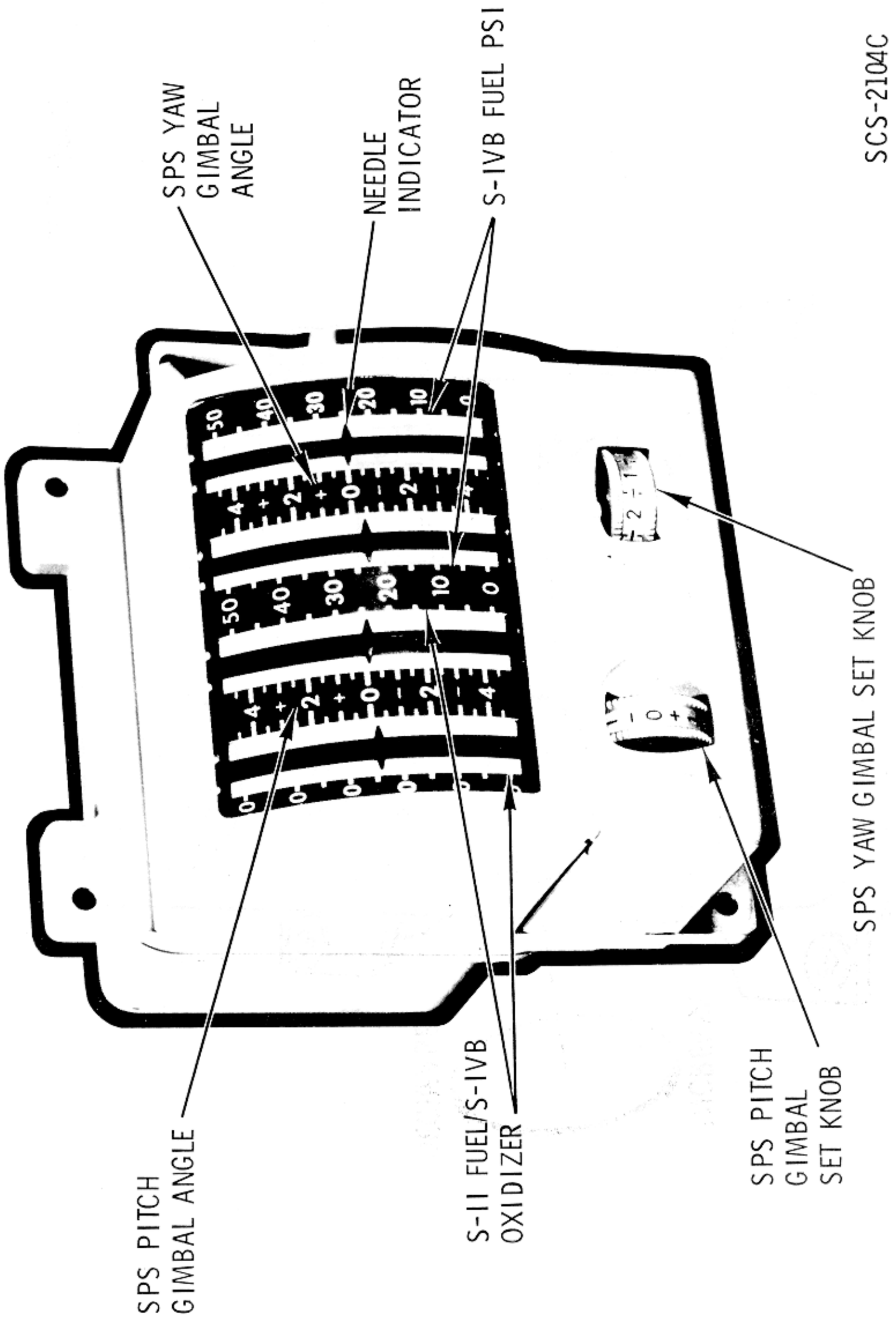

Figure 2.3-5. Gimbal Position Indicator

For an SCS delta V mode, manual SPS engine gimbal trim capability is provided. Desired gimbal trim angles are set in with the pitch and yaw trim thumbwheels. The indicator displays SPS engine position relative to actuator null and not body axes. The range of the engine pitch and yaw gimbal displays are ±4.5 degrees. This range is graduated with marks at each 0.5 degree and reference numeral at each 2-degree division. The range of the fuel pressure scale is 0 to 50 psi with graduations at each 5-psi division, and reference numerals at each 10-psi division. A functional description of the GPI display circuitry which shows the redundancy is in paragraph 2.3.5.3.

2.3.2.2.5 Flight Director Attitude Indicator (FDAI).

The FDAIs provide displays to the crew of angular velocity (rate), attitude error, and total attitude (figure 2.3-6). The body rate (roll, yaw, or pitch) displayed on either or both FDAIs is derived from the BMAGs in either gyro assembly 1 or 2. Positive angular rates are indicated by a downward displacement of the pitch rate needle and by leftward displacement of the yaw and roll rate needles. The angular rate displacements are "fly-to" indications as related to rotation control direction of motion required to reduce the indicated rates to zero. The angular rate scales are marked with graduations at null and ±full range, and at ±1/5, ±2/5, ±3/5, and ±4/5 of full range. Full-scale deflection ranges are obtained with the FDAI SCALE switch and are:

- Pitch rate: ±1 deg per sec, ±5 deg per sec, ±10 deg per sec
- Yaw rate: ±1 deg per sec, ±5 deg per sec, ±10 deg per sec
- Roll rate: ±1 deg per sec, ±5 deg per sec, ±50 deg per sec

Servometric meter movements are used for the three rate indicator needles.

The FDAI attitude error needles indicate the difference between the actual and desired spacecraft attitude. The attitude error signal can be derived from several sources: The uncaged BMAGs from GA-1, the CDUs (PGNCS), or the ASCP-GDC/IMU (figure 2.3-10). Positive attitude error is indicated by a downward displacement of the pitch error needle, and by a leftward displacement of the yaw and roll error needles. The attitude error needle displacements are "fly-to" indications as related to rotation control direction of motion, required to reduce the error to zero. The ranges of the error needles are ±5 degrees or ±50 degrees for full-scale roll error, and ±5 degrees or ±15 degrees for pitch and yaw error. The error scale factors are selected by the FDAI SCALE switch that also establishes the rate scales. The pitch and yaw attitude error scales contain graduation marks at null and ±full scale, and at ±1/3 and ±2/3 of full scale. The roll attitude scale contains marks at null, ±1/2, and ±full scale. The attitude error indicators utilize servometric meter movements.

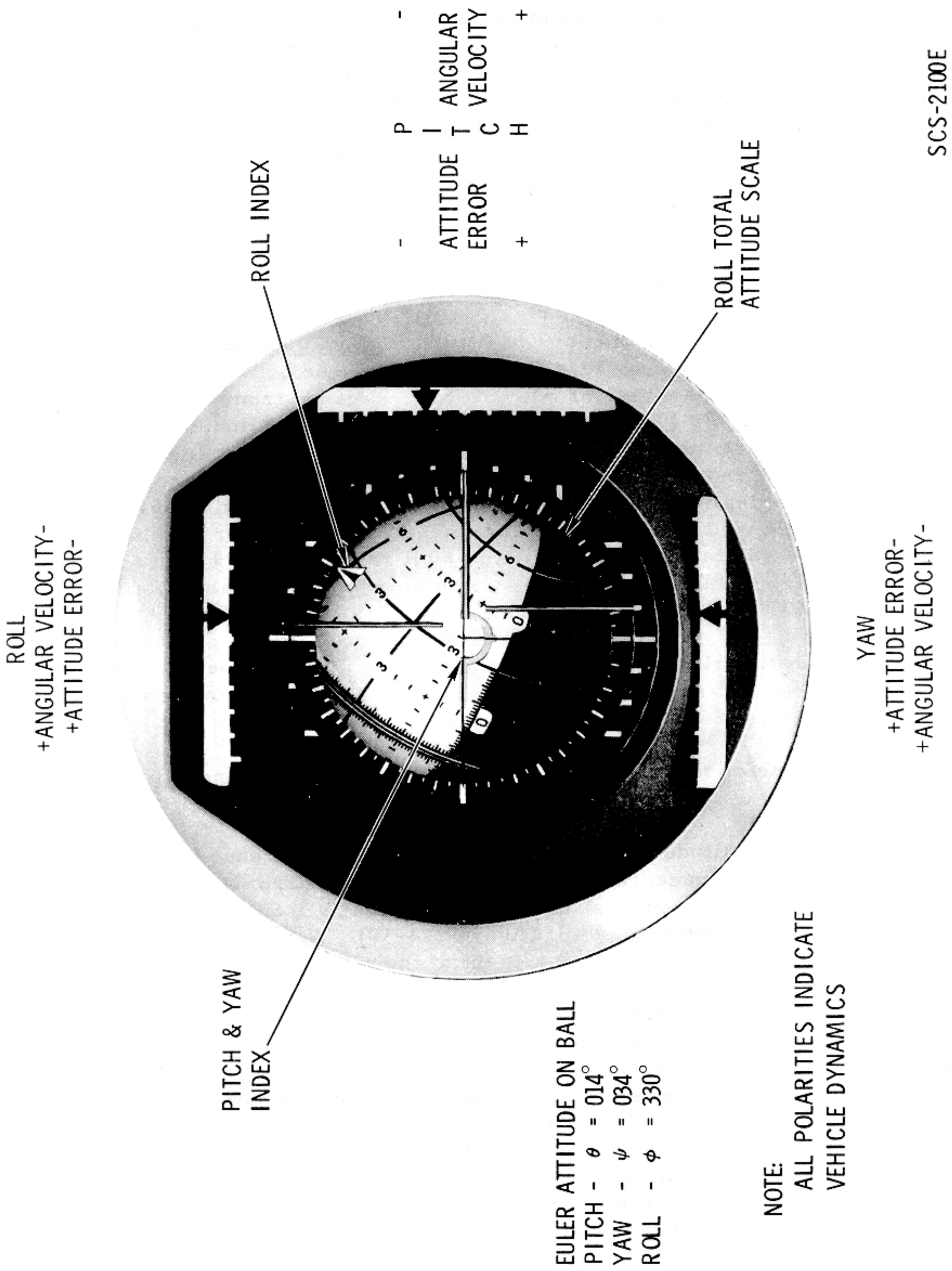

Figure 2.3-6. Flight Director Attitude Indicator

Spacecraft orientation, with respect to a selected inertial reference frame, is also displayed on the FDAI ball. This display contains three servo control loops that are used to rotate the ball about three independent axes. These axes correspond to inertial pitch, yaw, and roll. The control loops can accept inputs from either the IMU gimbal resolvers or the GDC resolvers. Selecting the source is covered in paragraph 2.3.2.3.

The control loops are proportional servos; therefore, the angles of rotation of the ball must correspond to the resolver angles of the source. The FDAI, illustrated in figure 2.3-6, has the following markings:

a. Pitch attitude is represented on the ball by great semicircles. The semicircle (as interpolated), displayed under the FDAI inverted wing symbol, is the inertial pitch at the time of readout. The two semicircles that make up a great circle correspond to pitch attitudes of θ and $\theta+180$ degrees.

b. Yaw attitude is represented by minor circles. The display readout is similar to the pitch readout. Yaw attitude circles are restricted to the intervals - 270 to 360 degrees (0°) and 0 (360°) to 90 degrees.

c. Roll attitude is the angle between the wing symbol and the pitch attitude circle. The roll attitude is more accurately displayed on a scale attached to the FDAI mounting, under a pointer attached to the roll (ball) axis.

d. The last digits of the circle markings are omitted. Thus, for example, 3 corresponds to 30, and 33 corresponds to 330.

e. The ball is symmetrically marked (increment wise) about the 0-degree yaw and 0/180-degree pitch circles. The following comments provide clarification for areas of the ball not shown in figure 2.3-6.

1. Marks at 1-degree increments are provided along the entire yaw 0-degree circle.

2. The pitch 180-degree semicircles has the same marking increments as the 0-degree semicircle.

3. Numerals along the 300- and 60-degree yaw circles are spaced 60-pitch degrees apart. Note that numerals along the 30-degree yaw circle are spaced 30-pitch degrees apart.

f. The red areas of the ball, indicating gimbal lock, are defined by 270 < yaw < 285 degrees and 75 < yaw < 90 degrees.

2.3.2.3 Functional Switching Concept.

The Block II SCS utilizes functional switching concepts as opposed to "mode select" switching mechanized in the Block I system.

Functional switching requires manual switching of numerous independent panel switches in order to configure the SCS for various mission functions (e.g., midcourse, ΔVs, entry, etc.). Mode switching would, for example, employ one switch labeled "midcourse" to automatically accomplish all the necessary system gain changes, etc., for that mission phase. Thus mode selection simplifies the crew tasks involved, but limits system flexibility between various mode configurations.

Function select switching, on the other hand, requires more crew tasks, but offers flexibility to select various gains, display scale factors, etc., as independent system capabilities. Function select switching also allows flexibility to "switch out" part of a failed signal path without affecting the total signal source (e.g., SCS in control of the vehicle with GN displays still presented to the crew).

2.3.2.3.1 Display Switching Interfaces.

The FDAI switches determine the source of display data, the FDAI selected, and the full-scale deflections of the attitude error and rate needles. The source of rate information for display will always be from BMAG 2 unless BMAG 1 is put into a backup rate configuration. Other switches also modify the data displayed and these will be pointed out as they are discussed. Both FDAIs are also assumed to be properly energized from the power switching panel.

2.3.2.3.2 Spacecraft Control Switching Interfaces.

There are two sources of vehicle controls selectable from the SC main display console: SCS or CMC. CMC is the primary method of control and the SCS provides backup control. The vehicle attitude control is obtained from the reaction control engines and the thrust vector control from the service propulsion engine.

2.3.3 ATTITUDE REFERENCE SUBSYSTEM. (Figure 2.3-7)

2.3.3.1 Gyro Display Coupler (GDC).

The purpose of the GDC is to provide a backup attitude reference system for accurately displaying the spacecraft position relative to a given set of reference axes. Spacecraft attitude errors can be displayed on an FDAI using the ASCP-GDC difference. This error signal provides a means of aligning the attitude reference system to a fixed reference while monitoring the alignment process on the error needles; or it could be used in conjunction with manual maneuvering of the spacecraft with the error needles representing fly-to-commands.

The GDC can be configured for the following configurations:

- GDC align - Provides a means of aligning the GDC to a given reference.
- Euler - Computes total inertial attitude from body rate signal inputs.
- Non-Euler - Converts analog body rate signals to digital body rate pulses.
- Entry (.05 G) - Provides redundant outputs of attitude changes with respect to the roll stability axis.

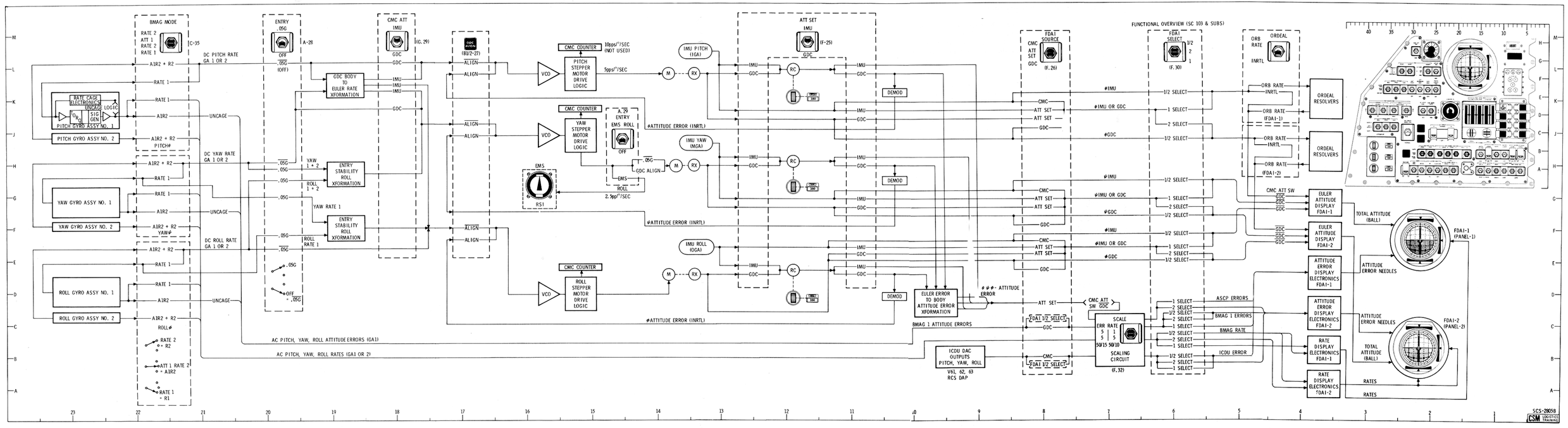

Figure 2.3-7. SCS Attitude Reference Overview (Sheet 1 of 2)

Figure 2.3-7. SCS Attitude Reference Overview (Sheet 2 of 2)

2.3.3.2 GDC Configurations.

Panel switch positions necessary to obtain each particular GDC function are discussed below.

a. The GDC align mode is used when aligning the GDC Euler angles (shafts) to the desired inertial reference selected by the ASCP thumbwheels (resolvers). This is done by interfacing the GDC resolvers with the ASCP resolvers (per axis) to generate error signals which are proportional to the sine of the difference between the resolver angles. (See figure 2.3-8.) When the GDC ALIGN switch is pressed, these error signals are fed back to the GDC input to drive the GDC/ASCP resolver angular difference to zero. During the align operation all other inputs and functions for the GDC are inhibited. When the EMS ROLL switch is up and the GDC ALIGN switch is pressed, the RSI pointer rotates (open loop) in response to yaw ASCP thumbwheel rotations.

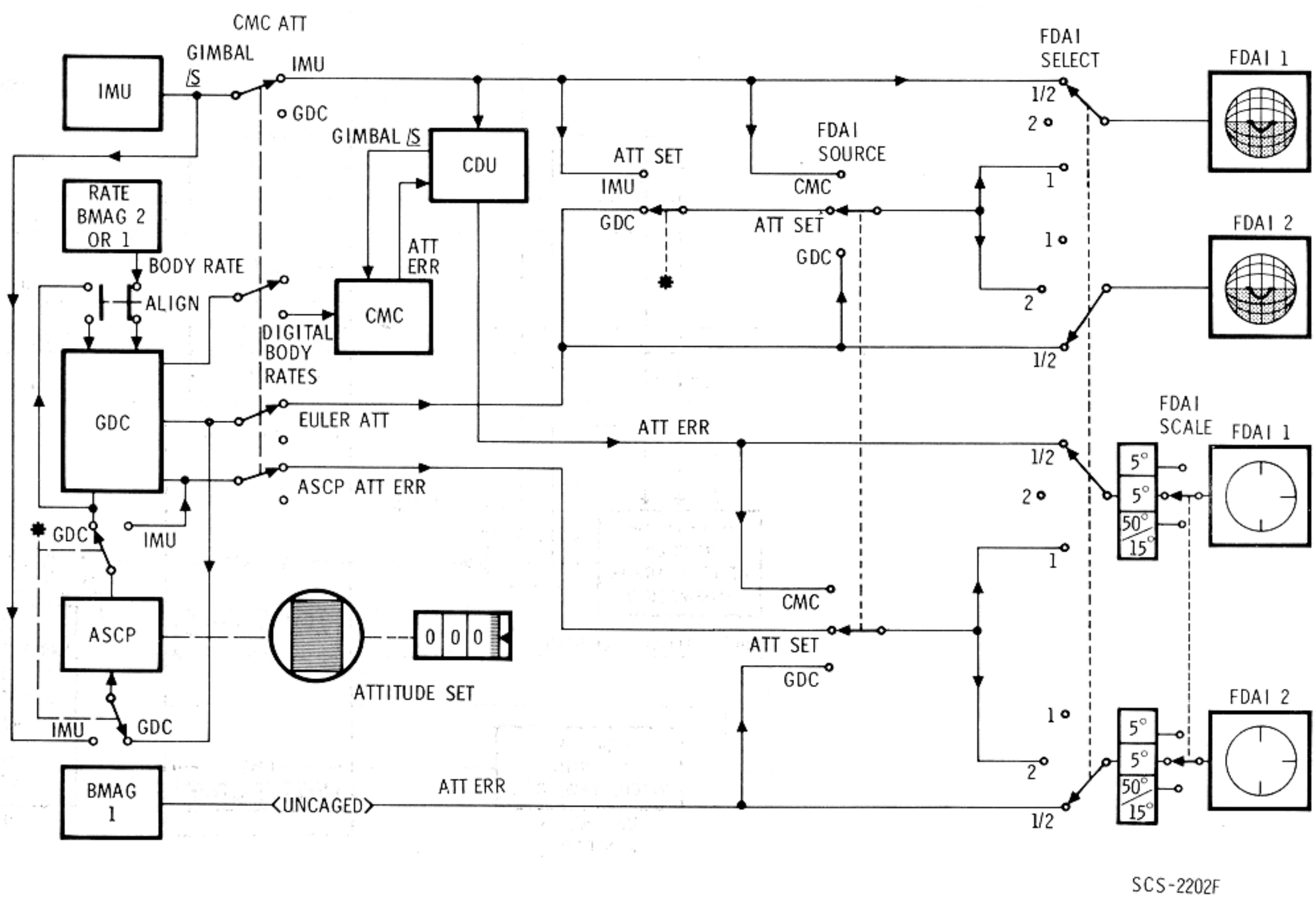

Figure 2.3-8. FDAI Attitude Select Logic

b. In the Euler configuration, the GDC accepts pitch, yaw, and roll d-c body rate signals from either gyro assembly and transforms them to Euler angles to be displayed on either FDAI ball. The GDC Euler angles also interface with the attitude set control panel (ASCP) to provide Euler angular errors, which are transformed to body angular errors for display on either FDAI attitude error indicators.

c. With the CMC ATT switch in the GDC position, pitch, yaw, and roll d-c body rate signals from either gyro assembly are converted to digital body rate signals and sent to the G&N command module computer. Power is not only removed from both FDAI ball-drive circuits when this configuration is selected, but ASCP-generated errors are also removed.

d. In the entry mode (≥.05 G), the GDC accepts yaw and roll d-c rate signals from:

1. Either gyro assembly, and computes roll attitude with respect to the stability axis to drive the RSI on the entry monitor system.

2. Gyro assembly 1, and computes roll attitude with respect to the stability axis to drive either FDAI 1 or FDAI 2 in roll only.

2.3.3.3 FDAI Display Sources.

The two FDAIs display total attitude and attitude errors that may originate within the SCS or PGNCS. They also display angular rate from the SCS. The flight crew establishes the FDAI sources by panel switch selection. (See figures 2.3-9 and 2.3-10.)

2.3.3.3.1 Total Attitude and Error Display Sources.

The total attitude and attitude error display selections result from combinations of panel switch positions (figure 2.3-8). When both FDAIs are selected, the platform gimbal angles will always be displayed on FDAI 1 while GDC Euler angles will be displayed on FDAI 2. In order to select the source of attitude display to a particular FDAI, that FDAI and source (G&N or SCS) must be selected (figure 2.3-10). The other FDAI will be inactive. It should be noted that any time total attitude is to be displayed on either FDAI, the CMC ATT switch must be in the IMU position.

The FDAI attitude display may be modified by a NASA-supplied Orbital Rate Display-Earth and Lunar (ORDEAL) unit. The ORDEAL unit is inserted electrically in the pitch channel between the electronic display assembly and FDAI to provide a local vertical display in the pitch axis of either (or both) FDAIs. Controls on the unit permit selection of earth or lunar orbits and orbital altitude adjustment.

The FDAI attitude error display source can be either the SCS or the G&N, with two sources per system. The attitude error sources are as follows:

a. The BMAG 1 error display is an indication of gimbal precession about its null point, assuming the gyro is uncaged, and may only be

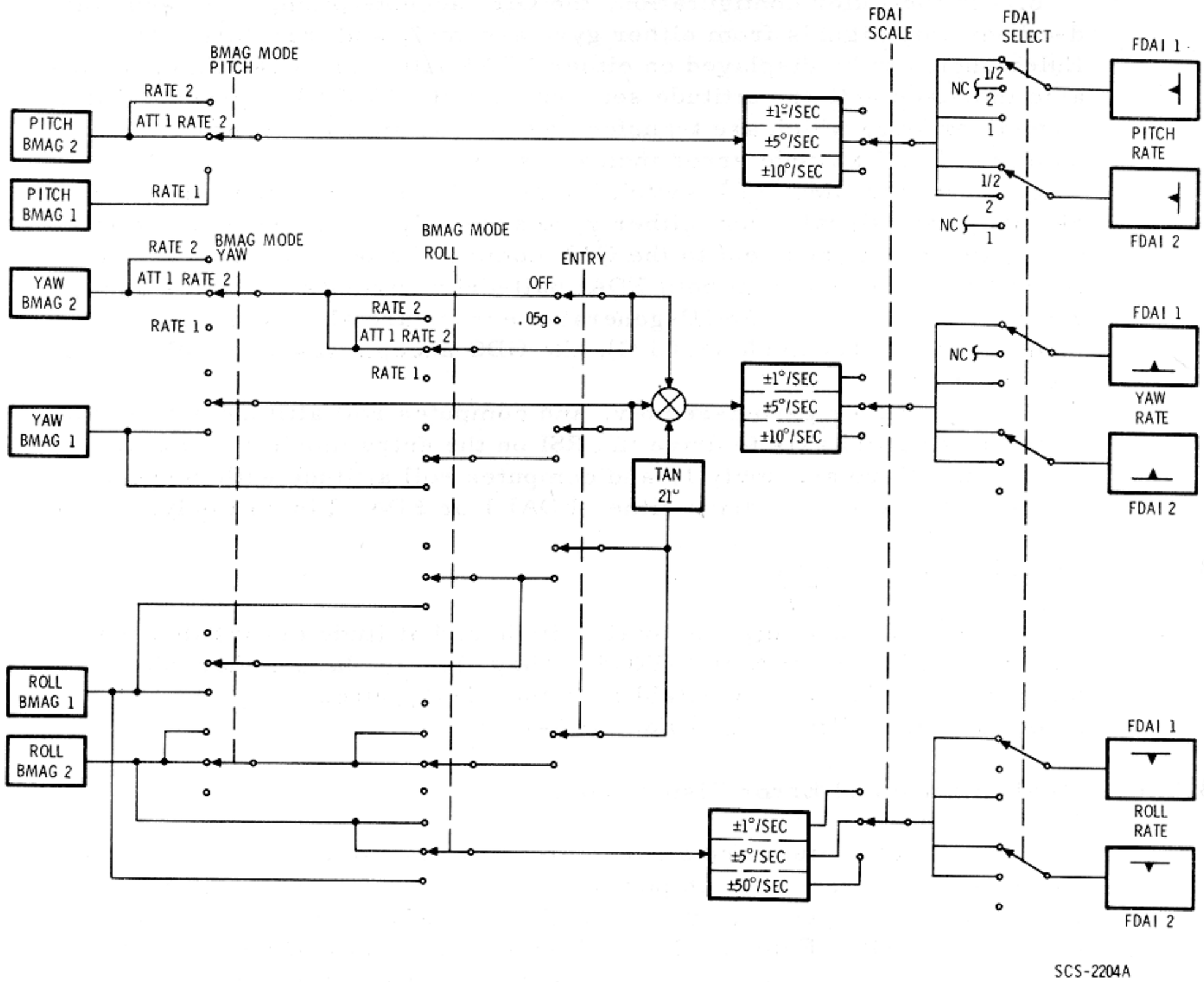

Figure 2.3-9. FDAI Rate Select Logic

displayed when the SOURCE switch is in the GDC position or when the FDAI SELECT switch is in the 1/2 position.

b. Euler angles from the GDC interface with the ASCP to provide an Euler angle error (GDC-attitude set difference signal) which is then transformed to body angle errors for display on either FDAI. This display source facilitates manual maneuvering of the spacecraft to a new inertial attitude that was dialed in on the attitude set thumbwheels.

c. Inertial gimbal angles from the IMU interface with the ASCP to generate inertial error (IMU-attitude set difference signal) which may be displayed on either FDAI. Thus, if the error needles were nulled using the thumbwheels on the ASCP, the ASCP indicators would then indicate the same inertial reference as the platform.

d. The CMC generates attitude errors that are a function of the program. These will be displayed when the SOURCE switch is in the CMC position, or when the FDAI SELECT switch is in the 1/2 position.

		ARS CONFIGURATIONS					TOTAL ATTITUDE DISP SOURCES				ERROR DISP SOURCES (4)			RATE DISP SOURCES
		GDC ALIGN	EULER	NON-EULER	ENTRY ≥ .05G	IMU	GDC (2)	BMAG #1 (3)	GDC-ATT SET DIFF	IMU-ATT SET DIFF	CDU	BMAG #2	BMAG #1
BMAG MODE	PITCH: RATE 2											✓	
	PITCH: ATT 1/ RATE 2							✓				✓	
	PITCH: RATE 1												✓
	YAW: RATE 2											✓	
	YAW: ATT 1/ RATE 2							✓				✓	
	YAW: RATE 1												✓
	ROLL: RATE 2											✓	
	ROLL: ATT 1/ RATE 2							✓				✓	
	ROLL: RATE 1												✓
ENTRY	.05G: .05G				✓		✓ (2)						
	.05G: OFF		✓	✓			✓	✓				✓ (4)	✓ (4)
	EMS ROLL: EMS ROLL						✓ (2)						
	EMS ROLL: OFF												
FDAI SELECT	(1) 1/2					✓	✓	✓			✓		
	2					✓	✓	✓	✓	✓	✓		
	1					✓	✓	✓	✓	✓	✓		
FDAI SOURCE	CMC					✓					✓		
	ATT SET					✓	✓	✓	✓	✓			
	GDC						✓	✓	✓				
ATT SET	IMU					✓			✓				
	GDC	✓					✓	✓					
CMC ATT	IMU		✓			✓	✓						
	GDC			✓									
GDC ALIGN	PRESS	✓											
	OFF		✓	✓	✓								
ATTITUDE SET CONT PANEL	3 THUMB-WHEELS	✓							✓	✓			

(1) ATTITUDE AND ATTITUDE ERROR TO FDAI #1 FROM G&N AND TO FDAI #2 FROM THE SCS
(2) DURING ENTRY, STABILITY ROLL ONLY IS SUPPLIED TO THE FDAI SELECTED AND TO THE ROLL STABILITY INDICATOR ON THE ENTRY MONITOR SYSTEM.
(3) BMAG UNCAGE LOGIC MUST ALSO BE SATISFIED IN ADDITION TO SWITCHES SHOWN.
(4) NECESSARY FOR CORRECT YAW DISPLAY DURING NON ENTRY MISSION PHASES.

CHART I

SCS-2804B

Figure 2.3-10. ARS Switching

The rate display sources (figures 2.3-9 and 2.3-10) will always be from either of the two gyro assemblies on a per-axis basis. The normal source for rate display will be the BMAG 2 gyros, and is selected by having the BMAG MODE switches in the ATT 1/RATE 2 or the RATE 2 position. The backup source is selected when the BMAG MODE switch is in the RATE 1 position. This will rate cage the BMAG 1 gyros and switch their outputs to the FDAI rate needles. When the ENTRY -.05 G switch is placed up, the roll rate gyro output is modified by the tangent 21 degrees and summed with the yaw rate. This summation results in a cancellation of the yaw rate sensed due to the CM rolling about the stability axis. Since this is a summation of a-c rate signals and since the gyro assemblies are supplied from separate a-c buses, selecting backup rate (BMAG 1) in yaw will automatically select the backup rate gyro (BMAG 1) in roll and vice versa. This prevents any phase difference from the two buses from affecting the summation of the two rate signals.

2.3.4 ATTITUDE CONTROL SUBSYSTEM (ACS).

2.3.4.1 Introduction.

The SCS hardware used in controlling the spacecraft attitude and translation maneuvers include the gyro assemblies, rotation and translation controls, and two electronic assemblies. The electronic control assembly (ECA) provides commands as a function of both gyro and manual control (RC and TC) inputs to fire the RCS via the reaction jet/engine control assembly (RJEC). Alternate spacecraft attitude control configurations provide several means of both manually and automatically controlling angular rates and displacements about spacecraft axes. Accelerations along spacecraft axes are provided via the TC. The crew uses this control for both docking and delta V maneuvers.

2.3.4.2 Hardware Function (ACS).

While a description of each SCS component was given in paragraph 2.3.2.1, this description considers those functions and interfaces used in the ACS.

2.3.4.2.1 Gyro Assembly - 1 (GA-1).

GA-1 contains three BMAGs that can provide pitch, yaw, and roll attitude error signals. These error signals are used when SCS automatic attitude hold is desired. The signals interface with the electronics control assembly (ECA). The BMAGs can be rate caged independently by control panel switching to provide backup rate information, or held in standby. The GA-1 BMAGs can be uncaged independently (by axis) during SCS attitude hold if the MANUAL ATTITUDE switch is in RATE CMD, the BMAG MODE switch in ATT 1 RATE 2, the ENTRY .05 G switch is OFF and no RC breakout switch is closed (figure 2.3-11).

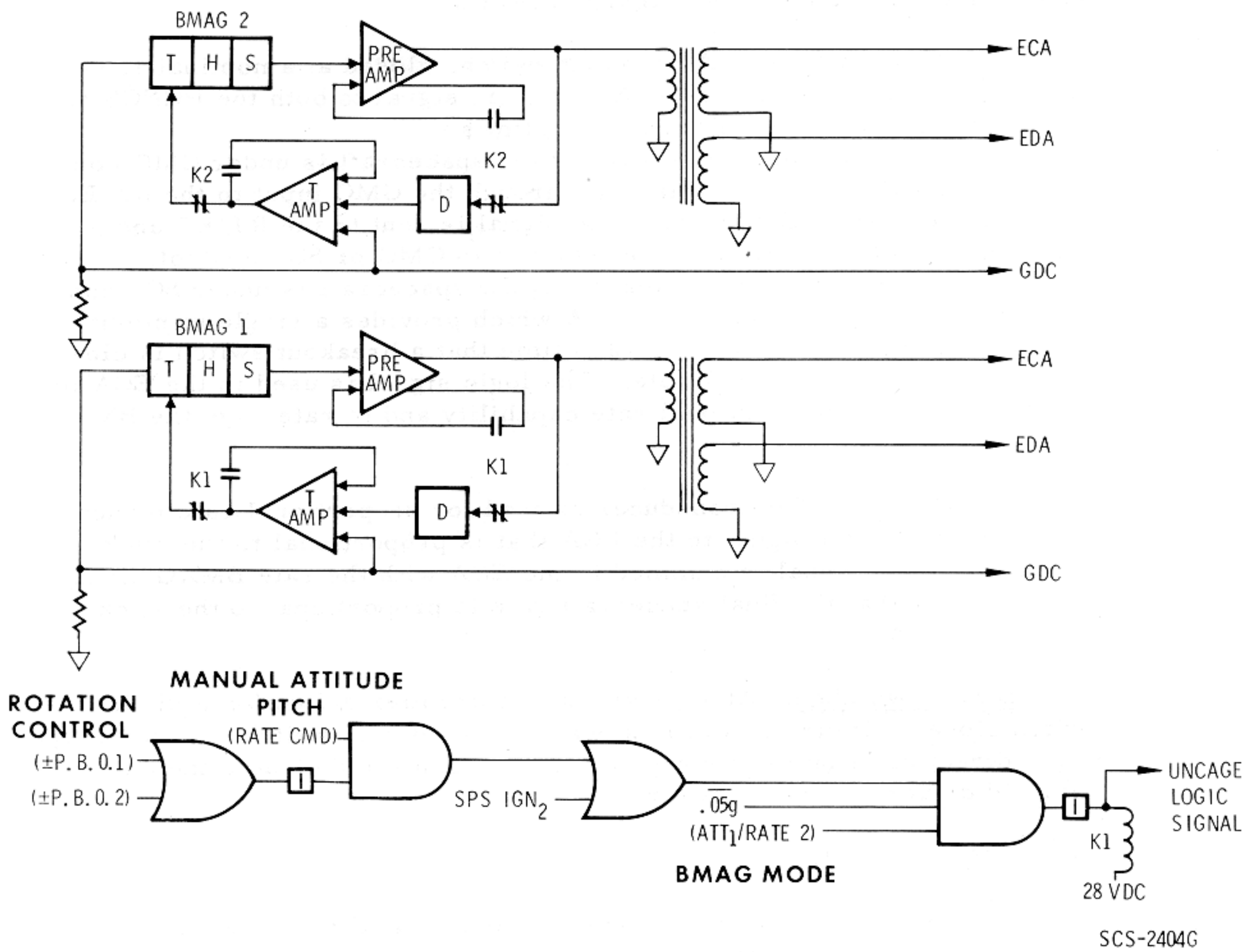

Figure 2.3-11. BMAG Logic and Outputs

2.3.4.2.2 Gyro Assembly - 2 (GA-2).

GA-2 contains three BMAGs that are always rate caged. These BMAGs normally provide pitch, yaw, and roll rate damping for SCS automatic control configuration and proportional rate maneuvering. The rate signals interface with the ECA. When backup rate by axis is selected (RATE 1), the GA-2 signal(s) is not used.

2.3.4.2.3 Rotational Controllers (RC-1 and RC-2).

The RCs provides the capability of controlling the spacecraft attitude simultaneously in three axes. Either controller provides the functions listed below for each axis (pitch, yaw, roll) and for each direction of rotation (plus or minus).

Within the RC are six breakout switches, three transducers, and twelve direct switches. (See figure 2.3-12.)

Breakout Switches. A breakout switch, closed at a nominal 1.5-degree RC deflection, routes a 28-vdc logic signal to both the PGNCS and the SCS for attitude control inputs as follows:

a. Rotation Command to CMC. If the spacecraft is under CMC control, the signal commands rotations through the CMC input to the RJ/EC.

b. Acceleration Command. The signal is sent to the RJ/EC and commands rotational acceleration whether in CMC or SCS control.

c. Minimum Impulse Command. If the spacecraft is under SCS control, the logic signal goes to the ECA which provides a single minimum impulse command to the RJ/EC each time that a breakout switch is closed.

d. Proportional Rate Enable. The logic signal is used in the ECA to enable the manual proportional rate capability and to rate cage the BMAGs in GA-1.

Transducer. The transducer is used for proportional rate maneuvers. It provides a signal to the ECA that is proportional to the stick deflection. The signal is summed in the ECA with the rate BMAG signal in such a way that the final spacecraft rate is proportional to the stick (RC) deflection.

Direct Switches. At 11 degrees of controller deflection a direct switch closes. If direct power is enabled, the direct switches route 28 vdc to the direct coils on the appropriate RCS engines and disable the auto coil solenoid drivers in that axis (or axes).

2.3.4.2.4 Translation Controller.

The translation controller provides the capability of manually commanding simultaneous accelerations along the spacecraft X-, Y-, and Z-axes. (See figure 2.3-13.) It is also used to initiate several transfer commands. These functions are described below.

Translation Commands.

a. CMC Control. If the spacecraft is under CMC control, a translation command results in a logic signal (28 vdc) being sent to the CMC. The CMC would provide a translation command to the RJ/EC.

b. SCS Control. If the spacecraft is under SCS control, the translation command is sent to the RJ/EC.

Clockwise Switches (CW). A clockwise rotation of the T-handle will disable CMC inputs to the RJ/EC. A logic signal ($\overline{CW}$) is sent to the CMC when the T-handle is at null.

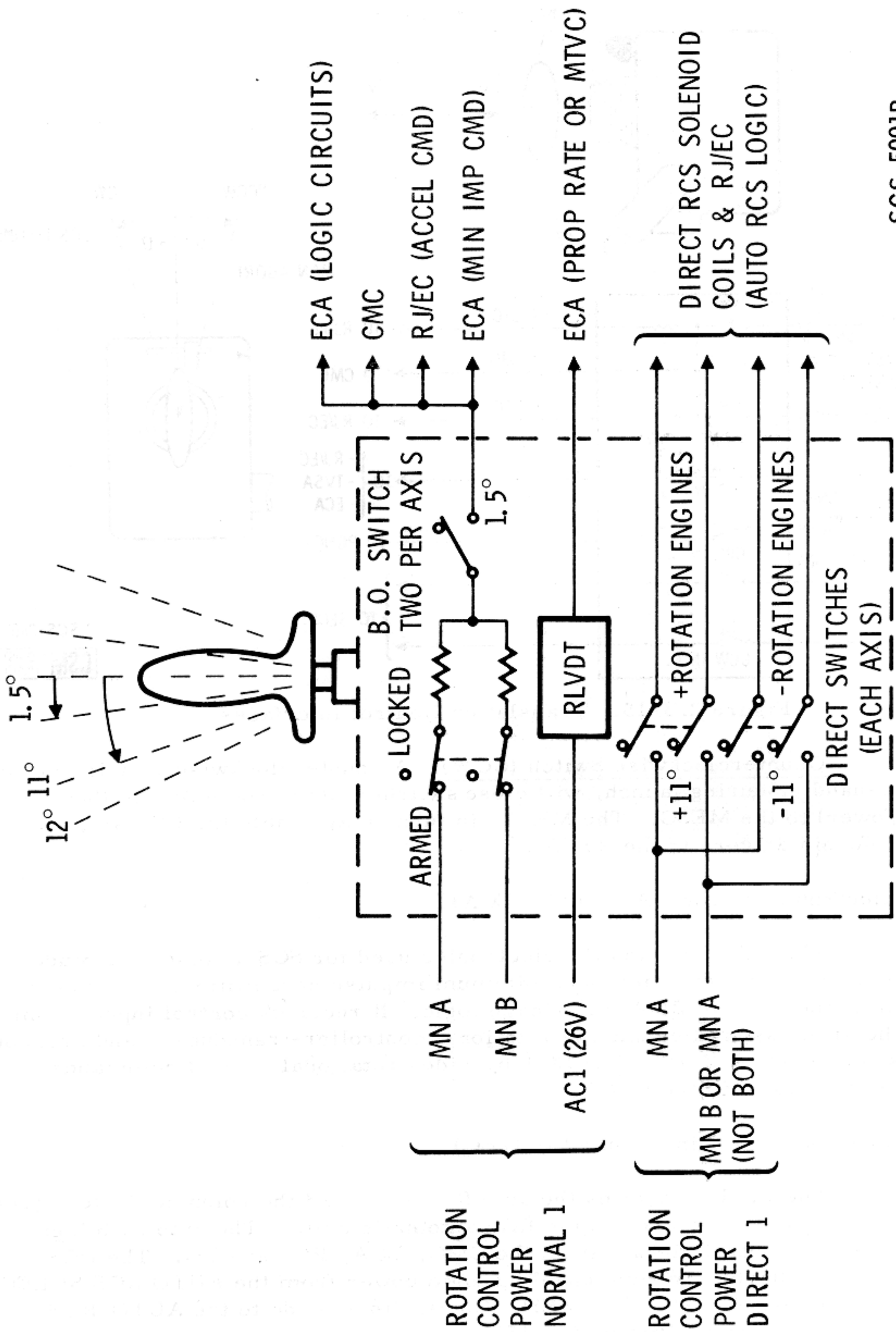

Figure 2.3-12. Rotation Control Interfaces

SCS

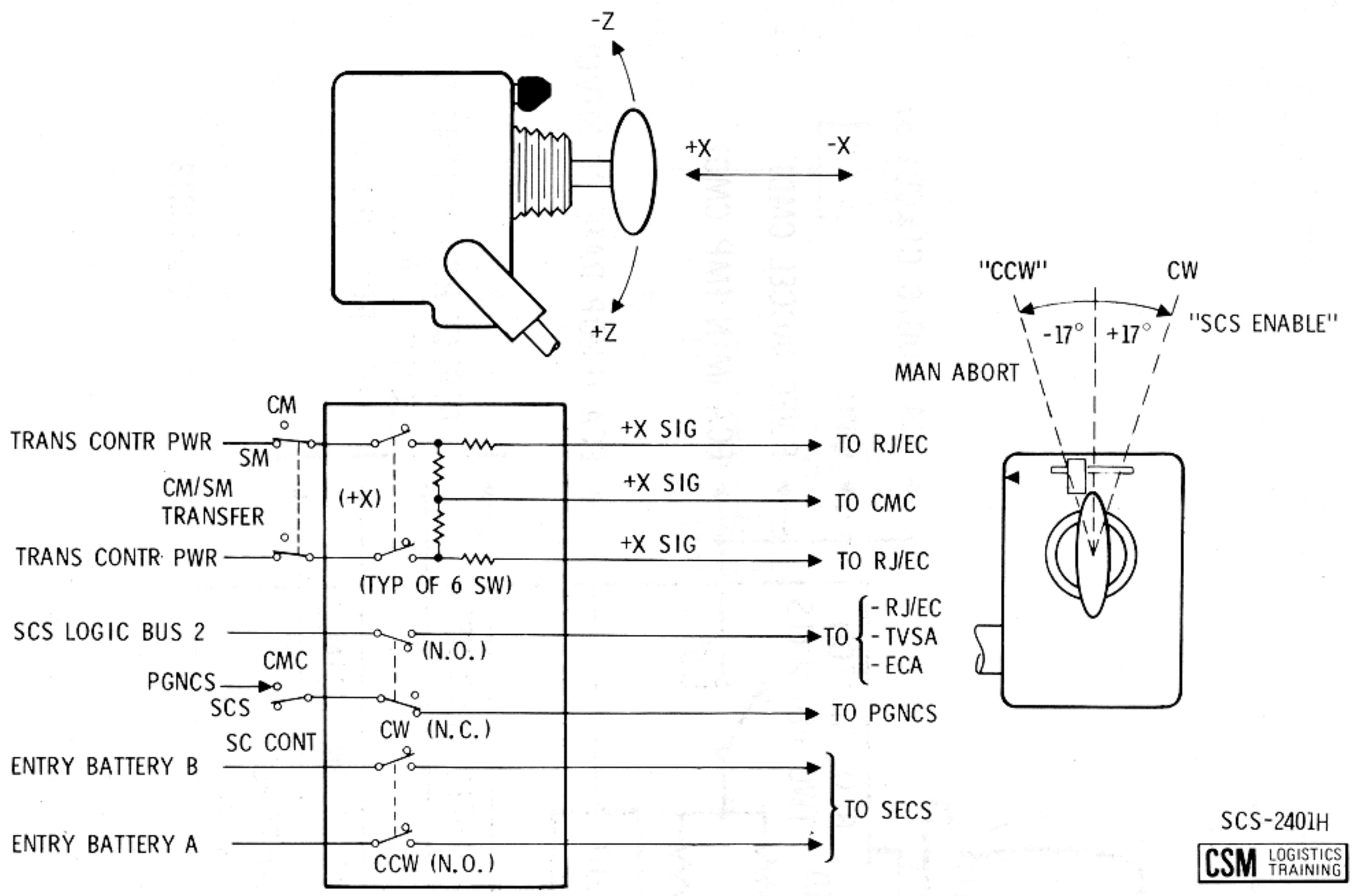

Figure 2.3-13. Translation Control Interfaces

Counterclockwise Switch (CCW). A counterclockwise rotation of the T-handle, during launch, will close switches which route 28 vdc (battery) power) to the MESC. The MESC, in turn, may enable the RCS auto coil solenoid drivers in the RJ/EC.

2.3.4.2.5 Electronics Control Assembly (ECA).

The ECA contains the electronics used for SCS automatic attitude hold, proportional rate, and minimum impulse capabilities. It also contains the attitude BMAG(s) uncage logic. It receives control inputs from the gyro assemblies and the rotational controller-transducers and breakout switches (MIN IMP). The ECA provides rotational control commands to the RCS logic in the RJ/EC.

2.3.4.2.6 Reaction Jet Engine Control (RJ/EC).

The RJ/EC contains the auto RCS logic and the solenoid drivers (16) that provide commands to the RCS automatic coils. The auto RCS logic receives control signals from the CMC, ECA, RC, and TC. The RCS solenoid drivers receive enabling logic power from the AUTO RCS SELECT switches on MDC-8. The MESC supplies the 28 vdc to the AUTO RCS SELECT switches (figure 2.3-15).

2.3.4.3 Reaction Control Subsystem Interface.

2.3.4.3.1 General.

The RCS provides the rotation control torques and translation thrusts for all ACS functions. Prior to CM/SM separation, the SM RCS engines are used for attitude control. The CM RCS is used after separation for control during entry (figures 2.3-14 and 2.3-15). The CM has only 12 RCS engines and does not have translational capability via the TC. After CM/SM separation, the A/C ROLL AUTO RCS SELECT switches have no function, as the 12 CM engines need only 12 AUTO RCS SELECT switches (figure 2.3-15).

An RCS engine is fired by applying excitation to a pair (fuel and oxidizer) of solenoid coils; the pair will be referred to in the singular as a solenoid coil. Each engine has two solenoid coils. One coil is referred to as the automatic coil, the other as the direct coil. Only the automatic coils receive commands from the RJ/EC. The direct commands are routed directly from the RC direct switches (or other switches). The automatic and direct commands are discussed in the following paragraphs.

2.3.4.3.2 Automatic Coil Commands.

Power. The automatic (auto) coils are supplied 28-vdc power via one set of contacts of the AUTO RCS SELECT switches (figure 2.3-15). The solenoid is operated by switching a ground to the coil through the appropriate solenoid driver in the RJ/EC. The auto coil power is obtained from the STABILIZATION/CONTROL SYSTEM A/C ROLL, B/D ROLL, PITCH and YAW circuit breakers on panel 8. The 28 vdc lines to the auto coils on SM engines (jets) except A_1, A_2, C_1, and C_2 are switched at CM/SM transfer to CM coils. The wires from the A/C ROLL AUTO RCS SELECT switches to SM engines A_1, A_2, C_1, and C_2 are open-ended after transfer. These switches have no function for the CM configuration. Enabling power for the RCS solenoid drivers is supplied to the second set of contacts of the AUTO RCS SELECT switches through the MESC (A and B) from the SCS CONTR/AUTO MNA and MNB circuit breakers (MDC-8).

The CM jets are supplied from two separate propellant systems, 1 and 2. The jets are designated by the propellant system. Each propellant system supplies half the CM jets, distributed such that one jet for each direction (plus and minus) and for each axis (pitch, yaw, and roll) is supplied from the 1 system and the other from the 2 system. When the RCS TRNFR switch is placed from SM to CM, motor switch contacts transfer auto coil power from SM engines to CM engines. Each motor switch contact transfers six engines.

Auto RCS Logic. Commands to the RCS engines are initiated by switching a ground, through the solenoid driver, to the low voltage side of the auto coils. The solenoid drivers receive commands from the auto RCS

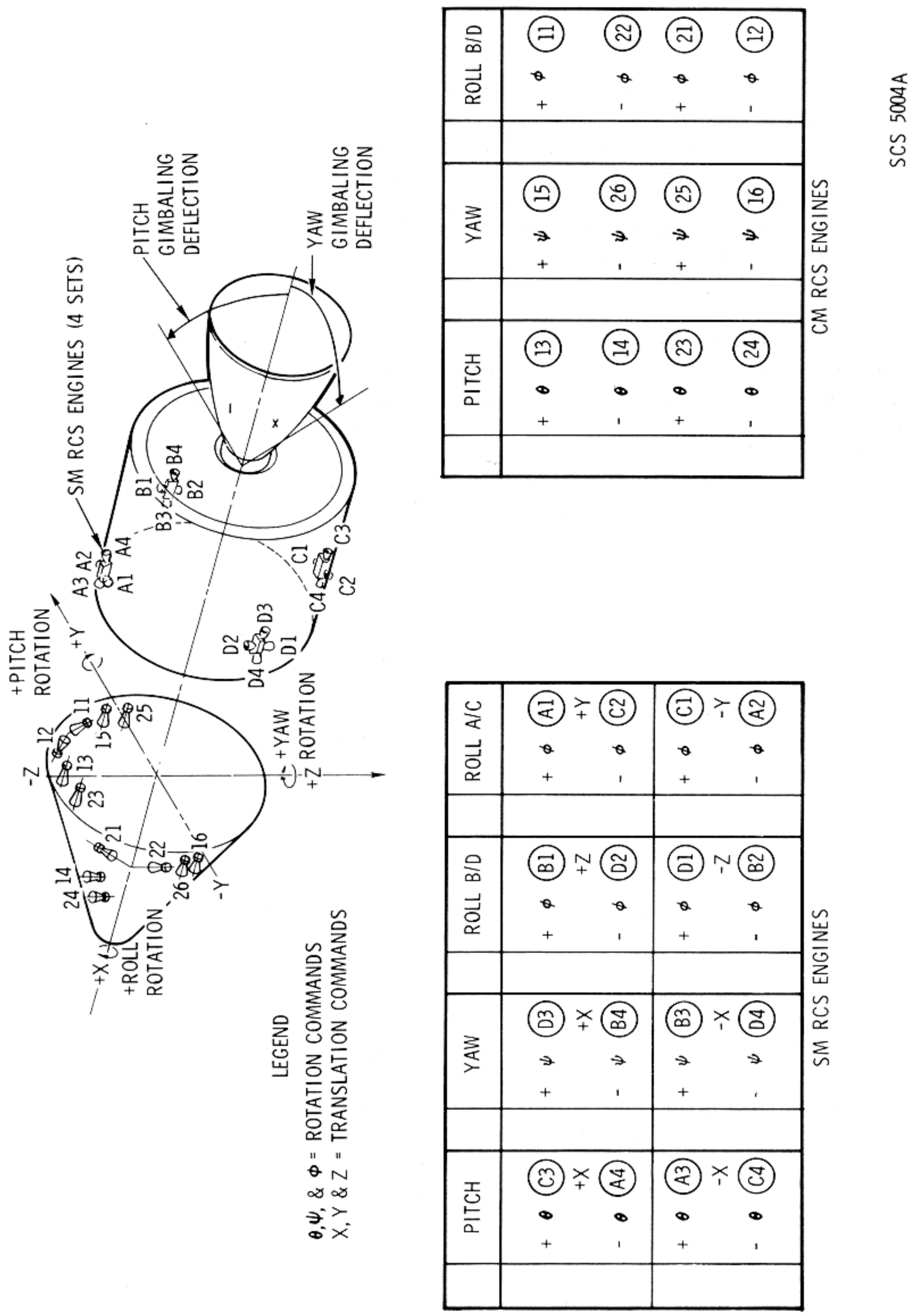

Figure 2.3-14. SM Jet Functions

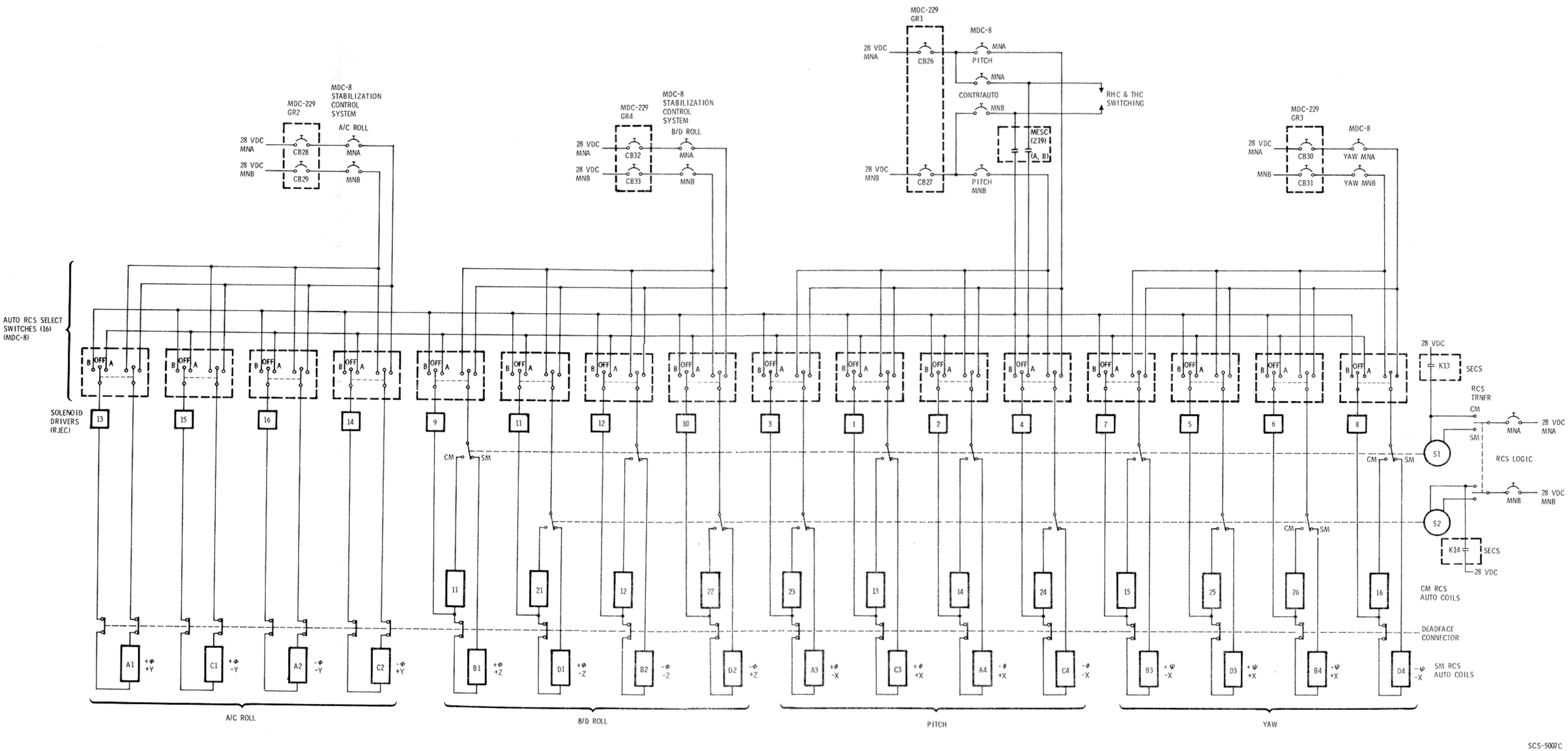

Figure 2.3-15. Auto RCS Enabling Power

logic circuitry contained in the RJ/EC. The auto RCS logic performs two functions:

a. Enables the command source selected based on logic signals received from the control panel or manual controls.

b. Commands those solenoid drivers necessary to perform the desired maneuver.

The logic receives RCS commands from the following sources:

- CMC (provides rotational and translational commands).
- ECA (provides rotational commands for either automatic attitude hold, proportional rate, or minimum impulse control).
- RC-1 and/or RC-2 (breakout switches [BO] provide continuous rotational acceleration).
- TC (provides translational acceleration commands).

The auto RCS logic (figure 2.3-16) is represented by four modules: one module each for pitch and yaw and two for roll (B/D and A/C). The solenoid drivers (four) associated with each module (shown as numbered triangles) correspond to the RCS engine solenoid drivers. The command sources (listed above) are shown as separate inputs to the modules, while enable/disable logic is represented as a single line to each module.

A detailed functional drawing of the pitch auto RCS logic shows how the command priorities are mechanized in the RJ/EC. (See figure 2.3-17.)

The ACS provides the following commands, listed in order of descending priority:

Direct Coil Commands. At the initiation of direct coil commands, all command input channels to the auto RCS logic module(s) in that axis (axes) are inhibited. Pitch and yaw auto commands are inhibited during SPS thrusting (IGN 1). This prevents auto coil commands from firing the RCS during SPS thrusting.

ACCEL CMD Selection. If a MANUAL ATTITUDE switch(es) is placed in the ACCEL CMD position, the CMC and ECA inputs to the auto RCS logic module(s) in that axis (axes) are inhibited. Commands to fire auto coils are enabled from the RC breakout switches. (See bottom "and" gates in figure 2.3-17.)

MIN IMP Selection. The ECA inputs to the auto RCS logic modules (figure 2.3-14) provide both the minimum impulse commands, as well as automatic attitude hold, automatic rate damping, and proportional rate command. When MIN IMP is selected on a MANUAL ATTITUDE switch, the ECA is configured to accept RC breakout commands and supply output pulses. All other outputs of the ECA are inhibited in the ECA.

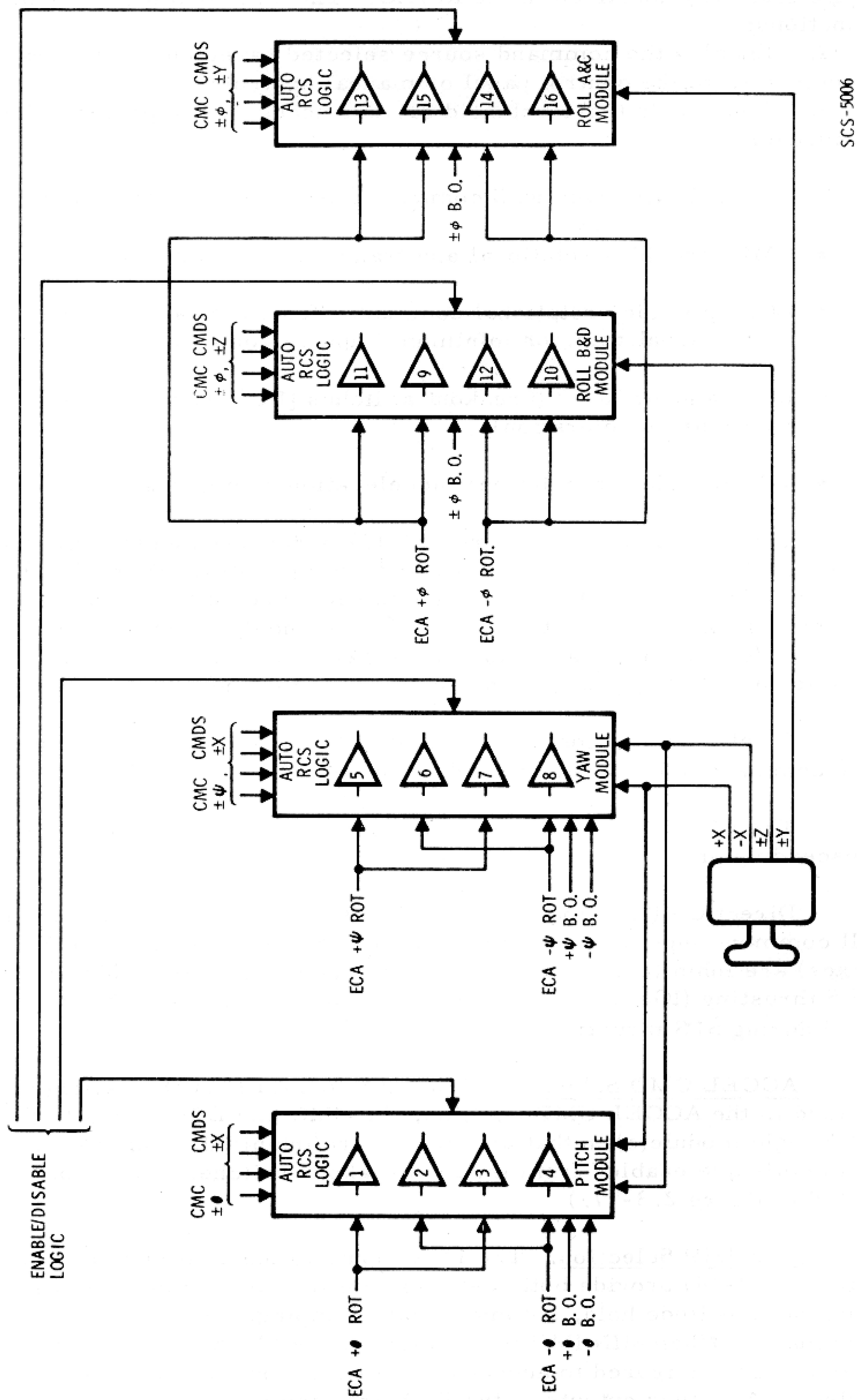

Figure 2.3-16. Auto RCS Signal Flow

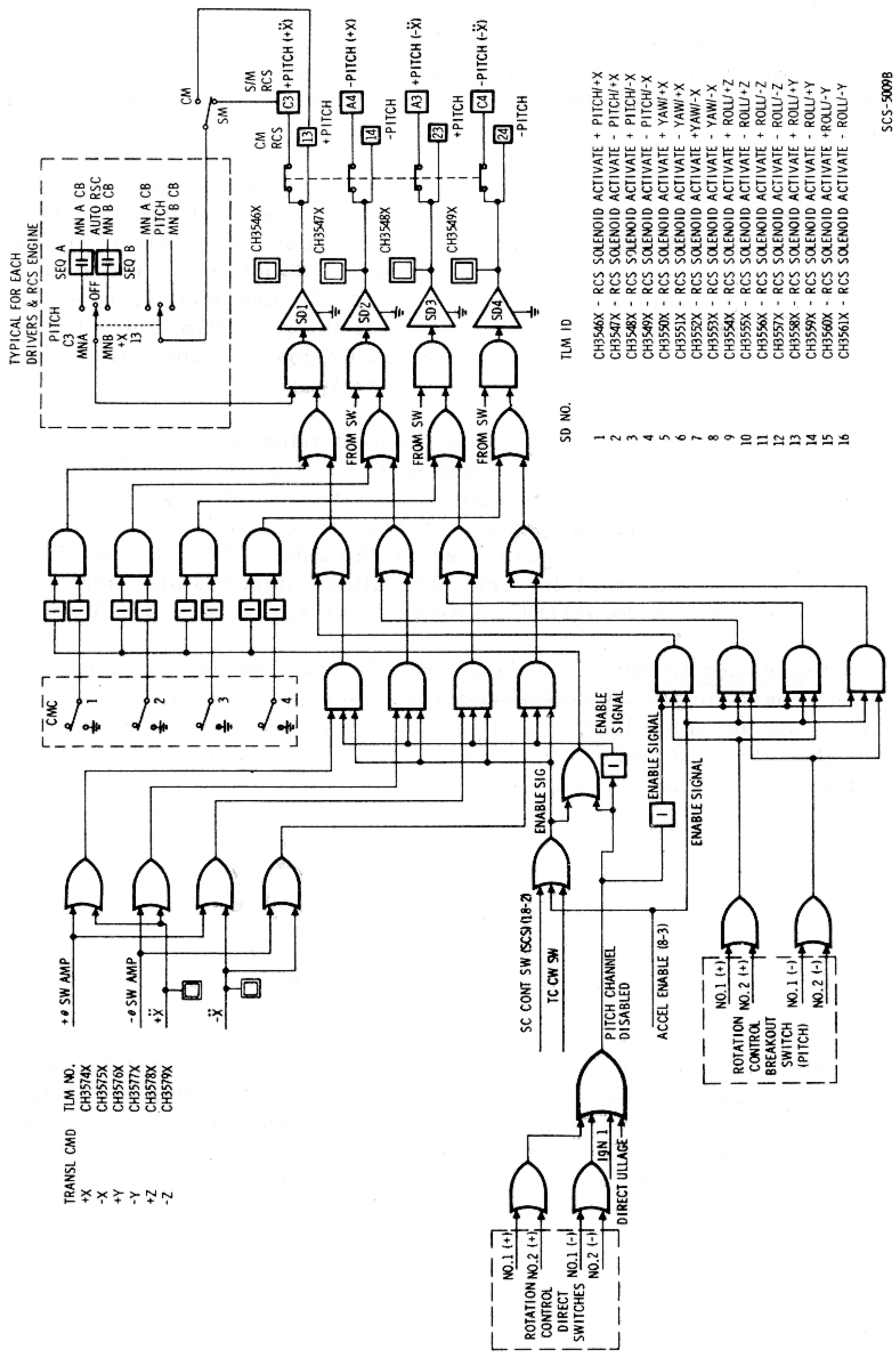

Figure 2.3-17. Auto RCS Logic

SCS

2.3.4.3.3 Direct Coil Commands.

The RCS engines can be operated by applying 28 vdc to the direct coils, as the other side of the direct coils is hard wired to ground. The coils receive commands from the sources described in the following paragraphs (shown in figure 2.3-18).

Direct Rotational Control. The direct switches in the rotation controllers (RCs) are enabled when the ROT CONTR PWR-DIRECT 1 & 2 switches on MDC-1 are up or down. The RCS commands are initiated when the RC is deflected a nominal 11 degrees about one or more of its axes. At this displacement a switch (direct) closure occurs, routing 28 vdc to the appropriate direct coils and to the auto RCS logic (paragraph 2.3.4.3.2). The signal to the auto RCS logic disables the solenoid drivers in the channel(s) under direct control.

Direct Ullage. An ullage is performed prior to an SPS thrust maneuver. Direct ullage is a backup to TC +X translation. Pressing the DIRECT ULLAGE pushbutton routes 28 vdc to the SM direct coils on the pitch and yaw RCS engines used for +X translations. (See table on figure 2.3-14.) A signal (28 vdc) is sent to the auto RCS logic that disables the pitch and yaw solenoid drivers. The ullage signal is also sent to the SPS ignition logic in the RJ/EC. (Refer to paragraph 2.3.5.5.)

Separation Ullage. The SECS (MESC) can command an ullage to enable separation of the CSM spacecraft from the S-IVB adapter. The ullage uses the same RCS engines as the direct ullage command and disables the pitch and yaw solenoid drivers. The enabling logic for this function is shown in figure 2.3-18.

SM/CM Separation. The SM JETTISON CONTROLLER sends commands to SM direct coils for -X translation and +roll rotation.

CM PROPELLANT JETT-DUMP Control. This function is used after the RCS capability is no longer required. Actuation of the CM PROPELLANT DUMP switches will provide commands to the direct coils on all CM engines, except 13 and 23.

At CM-SM separation the lines from the RC direct switches are transferred from SM direct coils to CM direct coils. This is similar to the automatic coil transfer described in paragraph 2.3.4.3.2, except that either of the two transfer motors transfers power to all CM direct coils. The lines for direct or separation ullage (steps b and c), are open ended at CM-SM separation.

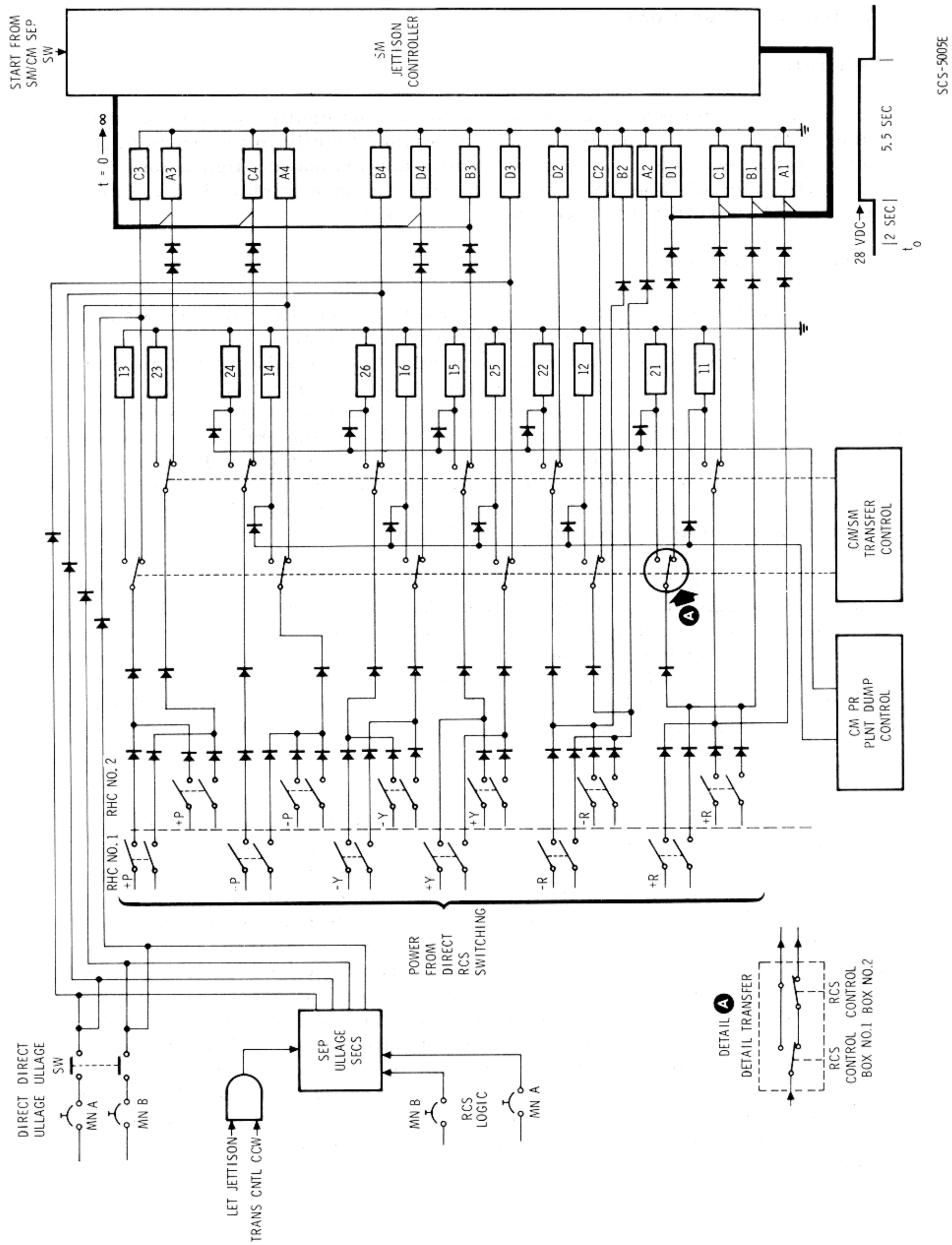

Figure 2.3-18. Direct Control Loop

SCS

2.3.4.4 Attitude Configurations.

2.3.4.4.1 General.

The SCS hardware can be placed in various configurations for attitude control. These configurations, described briefly in the preceding paragraphs, are categorized as automatic and manual configurations. The automatic control capabilities are described in paragraph 2.3.4.4.2 and the manual capabilities in paragraph 2.3.4.4.3.

2.3.4.4.2 Automatic Control.

The automatic capabilities of the ACS are rate damping and attitude hold. The rate damping configuration provides the capability of reducing large spacecraft rates to within small limits (rate deadband) and holding the rate within these limits. The attitude hold configuration provides the capability of keeping angular deviations about the body axes to within certain limits (attitude deadband). If attitude hold is selected in pitch, yaw, and roll, the control can be defined as maintaining a fixed inertial reference. The rate damping function is used together with the attitude hold configuration; therefore, the description of the rate control loop is included in the following attitude hold discussion.

Attitude hold uses the control signals provided by the rate and attitude BMAGs which are summed in the ECA. (See figure 2.3-19.) The control loops are summed at the input to a switching amplifier which provides the on-off engine commands to the auto RCS logic. Each of the three switching amplifiers (pitch, yaw, and roll) has two outputs that provide clockwise and counterclockwise rotation commands. The polarity of the d-c input voltages to the switching amplifiers determines the commanded direction of rotation.

If the switching amplifier input signal is smaller than a specific value, neither output is obtained. This input threshold required to obtain an output is the switching amplifier deadband. Manually-selectable gain authority provides flexibility in the selection of the attitude hold deadband width, the rate damping sensitivity and proportional rate command authority. The RATE switch controls both the rate damping threshold and the proportional rate command authority, which is discussed in paragraphs to follow. Since the attitude hold configuration utilizes the attitude and rate loops, the switching amplifiers will switch on when the summation of attitude error and rate signals equals the voltage deadband. Attitude error signals are scaled (20:1) as a function of the RATE switch. In addition, a deadband limiter circuit may be switched into the attitude error loops. This is accomplished by having the ATT DEADBAND switch in MAX, which, in effect, blocks the first four degrees of attitude error. The rate and attitude error deadbands are summarized in the following table.

SCS

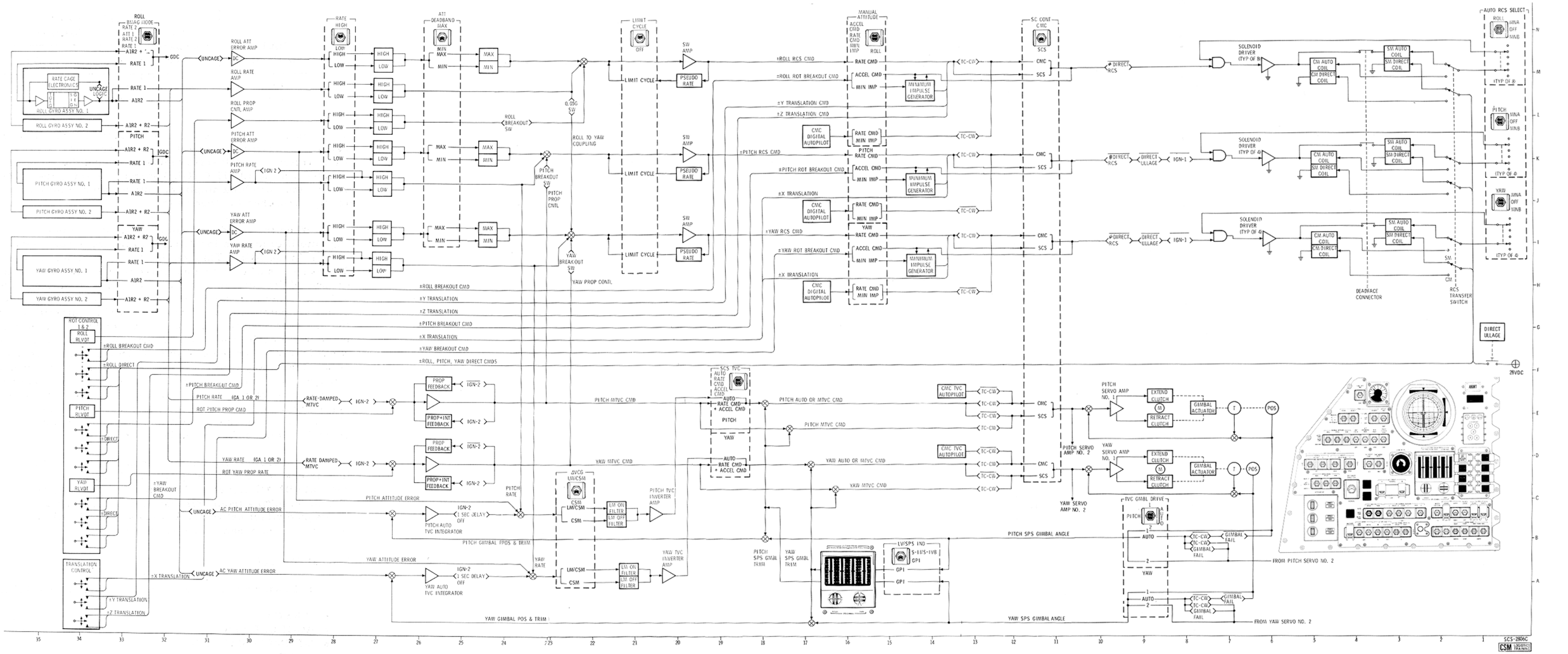

Figure 2.3-19. SCS Attitude and Thrust Vector Control System

RATE Sw Position	Rate deadband (°/Sec)	ATT DEADBAND Sw Position	
		MIN	MAX
LOW	±0.2	±.2 deg	±4.2 deg
HIGH	±2	±4 deg	±8 deg

During attitude hold it is desirable to maintain minimum rotation rates to conserve propellants. This capability is provided by the pseudo-rate circuit. Pseudo-rate feedback around the switching amplifier is enabled via the LIMIT CYCLE switch. Placing the LIMIT CYCLE up causes the switching amplifier output to pulse off and on when the input level approaches the threshold.

When the pseudo-rate mode is used, the pulse duration from the switching amplifier may be insufficient to insure proper operation of the solenoid valves in the RCS. This applies for operation near the deadband limits. To insure a sufficiently-long pulse to the solenoids, a one-shot circuit is connected downstream from the switching amplifier. The one shot provides a single minimum-impulse command (on-time) for each switching amplifier output pulse. When the switching amplifier pulse width exceeds the one shot on-time, the longer RCS command is initiated. The output pulse width of the one shot is a function of the d-c bus voltage; the pulse width increases as the bus voltage decreases. This is because the solenoid valve pickup time increases as the bus voltage decreases; therefore, a longer RCS "on" command is required. Thus, the one-shot circuit provides compensation for bus voltage variations: the pulse width varies approximately from 13 msec to 17 msec over a bus voltage range of 30 to 25 vdc. The one-shot circuit is also used in manual minimum impulse control. This configuration is described in the next paragraph.

An additional rate control loop is used for the yaw axis only. This loop is enabled during entry, after .05 G, and is used to cancel unwanted yaw rate BMAG signals. The unwanted yaw BMAG signals are those signals resulting from roll maneuvers about the stability X-axis. The 21-degree offset between this axis and the X-axis causes the yaw BMAG to sense a component of the entry roll rate.

2.3.4.4.3 Manual Control.

Following are the manual attitude control capabilities.

- DIRECT
- ACCELERATION CMD
- MINIMUM IMPULSE
- PROPORTIONAL RATE

The commands listed are initiated by manual inputs to either rotation controller. With the exception of direct, the RC commands rotations through the RCS auto coils.

The manual rotation control capabilities are discussed further in the following paragraphs.

Proportional Rate. Proportional rate provides the capability to command spacecraft rates that are proportional to the RC deflection. The RC transducer output is summed (by axis) through the breakout switch logic path (figure 2.3-19) with the rate signal from the BMAG. Initially, the RC output (commanded rate) will be larger than the BMAG output (actual rate) so that the summed signals will be greater than the switching amplifier threshold. The RCS engines will fire until the summation of the rate and commanded rates are within the switching amplifier deadband. When the RCS engines stop firing, the spacecraft will continue to rotate at a constant rate until a new rate is commanded.

Since the MANUAL ATTITUDE switch must be in RATE CMD for proportional rate, the spacecraft will be under automatic control when the RC is released.

The rate commanded by a constant stick deflection is a function of the ratio of the control loop gains. The ratio has two possible values which are selected by the RATE switch. The nominal rate commanded at maximum stick deflection (soft stop), for both rate switch positions, are shown in the following list.

RATE Switch Position	Maximum Prop. Rate CMD (By Axis)	
	Pitch & Yaw	Roll
LOW	0.7 deg/sec	0.7 deg/sec
HIGH	7 deg/sec	20 deg/sec

The switching chart shows the LIMIT CYCLE switch in the OFF position. Performing a proportional rate maneuver with pseudo-rate enabled (switch-on), required more RCS fuel than the same maneuver without pseudo-rate feedback.

Minimum Impulse. Minimum impulse provides the capability of making small changes in the spacecraft rate. When minimum impulse is enabled, the switching amplifier output is inhibited. Thus, the spacecraft (attitude) is in free drift in the axis where minimum impulse is enabled, if direct control is not being used.

		MANUAL				AUTOMATIC	
		DIRECT	ACCELERATION CMD	TRANSLATION	MINIMUM IMPULSE	PROPORTIONAL RATE (4)	RATE DAMPING	ATTITUDE HOLD
MANUAL ATTITUDE	ROLL	ACCEL CMD	✓	✓			✓	
		RATE CMD		✓		✓	✓	✓
		MIN IMP		✓	✓			
	PITCH	ACCEL CMD	✓	✓			✓	
		RATE CMD		✓		✓	✓	✓
		MIN IMP		✓	✓			
	YAW	ACCEL CMD	✓	✓			✓	
		RATE CMD		✓		✓	✓	✓
		MIN IMP		✓	✓			
BMAG MODE	ROLL	RATE 2					✓	
		ATT 1/RATE 2						✓
		RATE 1					✓	
	PITCH	RATE 2					✓	
		ATT 1/RATE 2						✓
		RATE 1					✓	
	YAW	RATE 2					✓	
		ATT 1/RATE 2						✓
		RATE 1					✓	
SC CONT		CMC						
		SCS						
TRANS CONTROL		CW						
		NEUTRAL						
RHC DIRECT PWR		UP/DOWN	✓	(3)	(3)	(3)	(3)	(3)
		OFF						
ROT CONTROL		B.O. SW		CLOSE(2)	CLOSE(2)	CLOSE	OPEN	OPEN
		DIRECT SW						
		CLOSE						
LIMIT (1) CYCLE		UP						
		OFF						
ENTRY		.05G						
		OFF						

(1) NOT REQUIRED TO ENABLE A PARTICULAR FUNCTION.
INDICATES DESIRED POSITION FOR RCS PROPELLANT CONSERVATION.
(2) IF B.O. SW IS OPEN THE S/C WILL BE IN FREE DRIFT.
(3) IF "ON", DIRECT SW IN ROTATION CONTROL MUST BE "OPEN".
(4) MAXIMUM RATE ATTAINABLE IS FUNCTION OF RATE-HIGH/LOW SWITCH

GENERAL COMMENTS:
A. THE CAPABILITIES, IN GENERAL, ARE LISTED IN ORDER OF THEIR PRIORITY.
B. WHEN MORE THAN ONE SWITCH POSITION IS CHECKED (✓) THE CAPABILITY WILL BE ENABLED IN EITHER POSITION.

SCS-5016A
CSM LOGISTICS TRAINING

Figure 2.3-20. ACS Control Capabilities

Minimum impulse control is commanded by the RC breakout switch. This switch provides a 28-vdc logic signal to the one-shot circuit in the ECA. The one shot (paragraph 2.3.4.4.2) provides a command to the auto RCS logic for a nominal 15 ms. Additional minimum impulse commands are obtained each time a breakout switch is closed (by repeated opening and closing of the breakout switch).

Acceleration Command. When acceleration command is enabled and a breakout switch is closed, continuous commands are sent to the appropriate RCS auto coils. The SC CONT switch has no function in enabling the acceleration command capability, which is second in priority only to direct coil operations. (Refer to paragraph 2.3.4.3.2.)

Direct. Direct control is similar to acceleration command except that the direct RCS coils are used. Also, instead of a breakout switch providing the firing command, the RC direct switch is used to provide 28 vdc straight to the direct coils (figure 2.3-19). Power to the RC direct switches is controlled by the two ROT CONTR PWR DIRECT switches on MDC-1, one switch controlling the 28 vdc for each RC. (See figure 2.3-26.) During direct control in an axis, all auto coil commands in that axis are inhibited in the auto RCS logic (figure 2.3-17).

2.3.4.5 Translation Control.

When power is supplied to the translation control (TC), a manual translational command fires auto coils to give acceleration(s) along an axis (or axes). The TRANS CONTR PWR switch on MDC-1 supplies 28 vdc to the TC translational switches (figure 2.3-26).

TC inputs are routed as logic inputs to the auto RCS logic when the spacecraft is under SCS control. However, during CMC control, TC commands arrive at the auto RCS logic via the CMC. (See figure 2.3-17.) Since the TC uses only SM RCS engines, after CM/SM separation the TC has no translation function.

Other translational control is possible from inputs other than the TC. These are direct ullage, CSM/LV separation ullage, and CM/SM minus —X translation (SM JETT CONT). These translation commands utilize direct coils. (See figure 2.3-18.)

Certain panel switch combinations are necessary for each ACS capability that has been discussed. For a summary, see figure 2.3-20.

2.3.5 THRUST VECTOR CONTROL (TVC).

2.3.5.1 Introduction.

The spacecraft attitude is controlled during a delta V by positioning the engine gimbals (TVC) for pitch and yaw control while maintaining roll

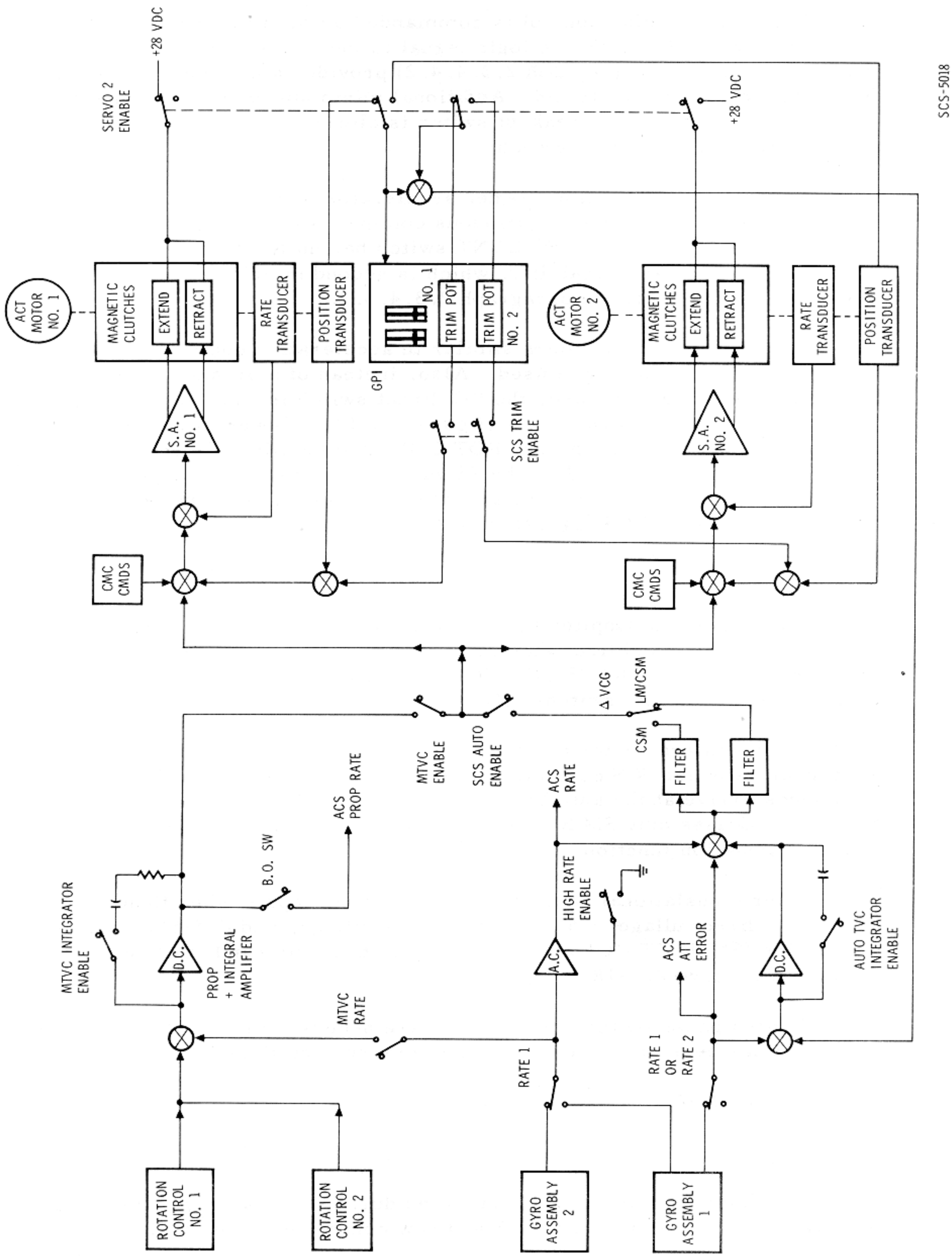

Figure 2.3-21. TVC Signal Flow

attitude with the attitude control subsystem. The SCS electronics can be configured to accept attitude sensor inputs for automatic control (SCS auto TVC) or rotational controller (RC) inputs for manual thrust vector control (MTVC). Manual TVC can be selected to utilize vehicle rate feedback signals summed with the manual inputs; this comprises the MTVC/RATE CMD configuration. Selecting MTVC without rate feedback describes the MTVC/ACCEL CMD configuration. A different configuration can be selected for each axis; for example, one axis can be controlled manually while the other is controlled automatically.

The following paragraphs present the characteristics of the SCS/TVC configurations. A switching table, specifying the panel switching and logic signals required for enabling each configuration, is included. The operation of the engine ignition/thrust on-off logic is also described.

2.3.5.2 TVC Panel Configurations.

On the simplified TVC signal flow diagram shown in figure 2.3-21 functional enabling switches are used for reference. The TVC switching table (figure 2.3-22) relates the functional switching and panel switching to the TVC configuration desired. Both figures are applicable to either the pitch or yaw TVC channel.

In general, it is possible to enable a functional switch through several (alternate) panel configurations. The alternate configurations usually require the CW logic signal which is obtained from a clockwise rotation of the translation controller (TC) T-handle. This provides a convenient means of transferring from one TVC configuration to another during the thrusting maneuver. The CW signal will also enable transfer from servo No. 1 to servo No. 2 (figure 2.3-22) under certain conditions. Thus, it is possible to transfer to a completely redundant configuration by using the TC clockwise switch.

The gimbal servo control loop consists of a servoamp that drives two magnetic clutch coils; one coil extends the actuator; the other retracts the actuator. Gimbal rate and position transducers provide feedback for closed loop control. Two servo control channels are provided in each axis, pitch and yaw. The active channel is selected through functional switch servo 2 enable (figure 2.3-21). Primary control utilizes servo No. 1. Servo No. 2, in an axis, can be engaged either by selecting 2 position on the TVC GMBL DR switch or by automatic transfer. Automatic transfer will occur, if the TVC GMBL DR switch is in the AUTO position and either the FS (fail sense) or CW logic signal is present. The CW logic will enable transfer to servo No. 2 in both axes, whereas, the FS logic will enable transfer only in the axis where it is present. The fail sense signal is generated in the motor excitation circuitry of servoactuator No. 1, occurring when an overcurrent is sensed. The transfer logic described is included in the switching table (figure 2.3-22).

SC CONT		CMC DAP (1)	SCS AUTO	MTVC RATE CMD		MTVC ACCEL CMD	SCS GMBL TRIM	SERVO 1		SERVO 2 (3)		
BMAG MODE (PITCH & YAW)	CMC	✓	✓	✓		✓	✓					
	SCS				✓							
	RATE 2											
	ATT 1/ RATE 2		✓		✓							
	RATE 1											
SCS TVC (PITCH & YAW)	AUTO		✓		✓							
	RATE CMD			✓								
	ACCELCMD					✓						
TVC GMBL DRIVE (PITCH & YAW)	1							✓				
	AUTO								✓		✓	
	2											✓
XLATION CONTROL	NEUTRAL	✓	✓									
	CW			✓	✓	✓	✓					
IGN2 (2)			✓	✓	✓	✓						
FAIL SENSE SIG (PITCH OR YAW)				✓	✓	✓						

(1) CMC MODE SWITCH MUST BE IN AUTO
(2) IGN2 SIGNAL APPEARS AT SPS IGNITION AND IS DELAYED OFF 1 SEC AT THRUST TERMINATION.
(3) SERVO LOOP SWITCHING BY AXIS WITH FAIL SENSE LOGIC SWITCHING

SCS-2802B

Figure 2.3-22. TVC Switching

SCS

2.3.5.3 GPI Signal Flow.

The gimbal position display (figure 2.3-5) is used as a monitor of SPS pitch and yaw gimbal deflections from actuator null during CMC and SCS control of a ΔV. Prior to an SCS ΔV, the SPS engine must be positioned with the trim thumbwheels on the GPI. In this case, the GPI will display the trim gimbal angles that are set with the thumbwheels.

Since there is only one display panel of gimbal position, there are redundant indicators, servometric meter drivers, and power supplies associated with both the pitch and yaw position displays. (See figure 2.3-23.) When servo channel No. 1 is controlling the SPS actuator, the position input to both GPI indicators (pitch and yaw) is supplied from the No. 1 position transducer. If actuator control is transferred to the No. 2 servo, then the No. 2 position transducer drives both indicators in that axis. If the FDAI/GPI POWER switch is in BOTH position then all four indicators are powered. With the switch in position 1, the first and third indicators are enabled. The second and fourth indicators are energized with the switch in position 2.

2.3.5.4 SCS Auto TVC.

In order to configure the SCS electronics for an SCS auto TVC, certain panel switches must be positioned. In addition, other manual or automatic logic switching will affect the control signals and servo loops.

Since SCS auto TVC requires attitude error signals from GA-1, the gyro uncage logic must be satisfied (figure 2.3-11). This requires that the BMAG MODE switches be in ATT 1 RATE 2, the ENTRY-.05 G switch be OFF, and that the SPS ignition signal (IGN 2) be present. For attitude hold (paragraph 2.3.4.2.1), the IGN 2 logic was not needed as GA-1 can be uncaged by placing the MANUAL ATTITUDE switches to RATE CMD while having no breakout switch input.

The attitude error signal (in pitch and yaw) is summed with the SPS gimbal position and GPI trim at the input to an integrator (figure 2.3-22). The integrator output is summed with attitude error and rate, filtered for body-bending, and then applied as an input to the servo amplifiers (primary and secondary). During a delta V the integrator output insures that the thrust vector stays inertially fixed even though the cg shifts as the propellants are consumed. The signal path requires that the delta V is under SCS control with the SCS TVC switch in AUTO.

Though the control signal is applied to both servo amplifiers, only one will be positioning the SPS gimbal actuators. Selection logic controlling which servo amplifier is energized is represented by the SERVO 2 ENABLE functional switch. The TVC GIMBAL DRIVE switches on MDC-1 have AUTO positions which provide an automatic transfer from servo 1 to servo 2 if either a TC-CW switch is closed or an over-current logic

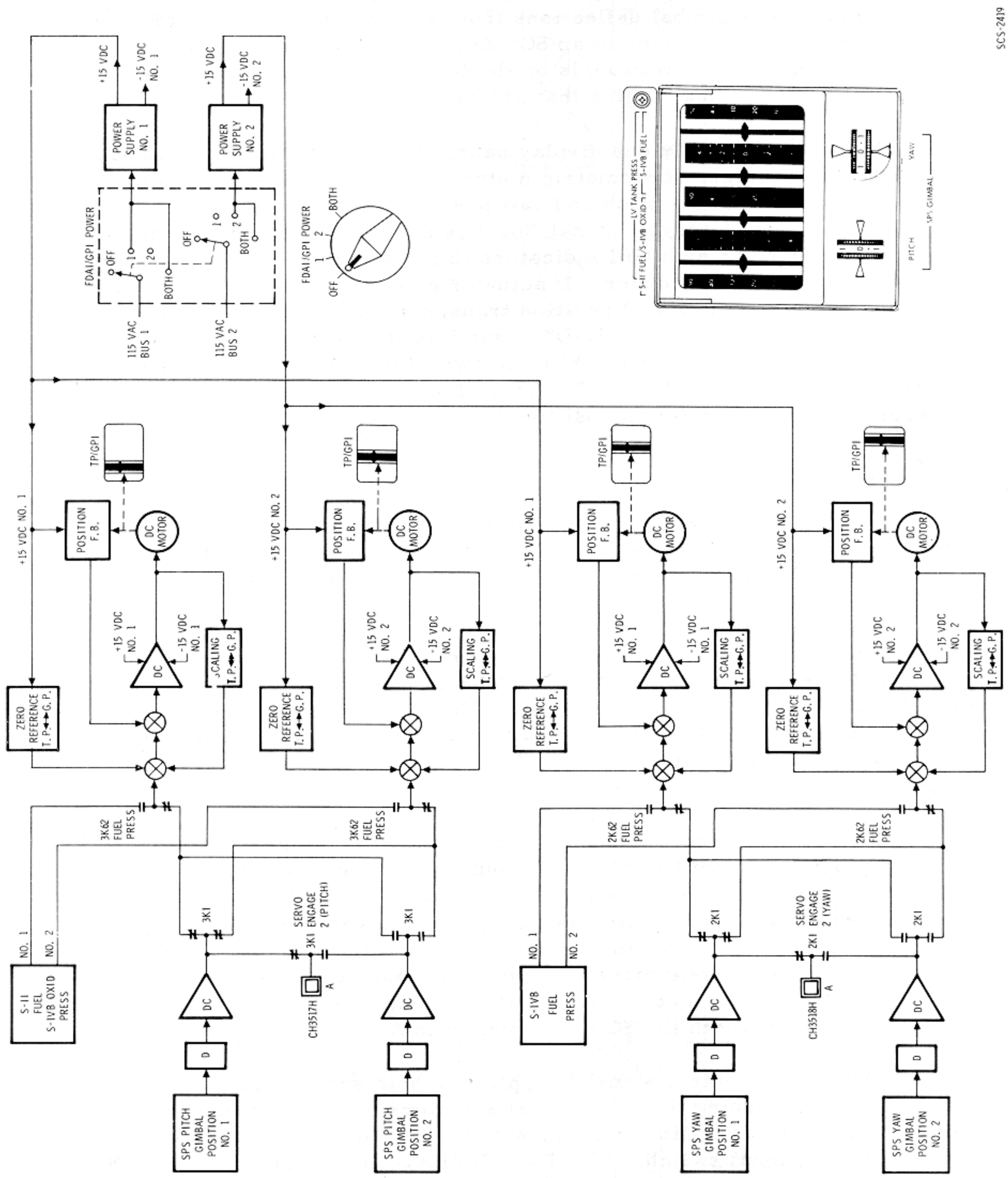

Figure 2.3-23. GPI Signal Flow

signal is sent from the SPS. Positioning the TVC GIMBAL DRIVE switches to 1 or 2 selects the desired servo loop, but overrides the TC—CW or over-current transfer.

Pre-thrust gimbal trim is accomplished by manually turning the trim wheels on the gimbal position indicator (GPI) to obtain the desired indicator readout. The trim wheel in each axis is mechanically connected to two potentiometers. As shown in figure 2.3-21, one potentiometer is associated with servo No. 1 and the second with servo No. 2. It is desirable to pretrim before an SCS delta V, to minimize the transient duration and the accompanying quadrature accelerations. It is also desirable to set the trim wheels properly before a CMC delta V if the SCS AUTO configuration is to serve as a backup. This will enable the SCS to relocate the desired thrust direction if a transfer is required after engine ignition.

2.3.5.5 Manual Thrust Vector Control.

Manual control of the thrust vector utilizes crew commands via the RC to position the gimbaled SPS. There are two types of MTVC: MTVC with rate damping (rate command) and MTVC without rate damping (acceleration command). Either mode of MTVC is selectable by panel switching. In addition, TC-CW logic provides either an automatic transfer from a PGNCS-controlled delta V or from an SCS auto delta V. (See figure 2.3-22.)

In order to provide ease of manual control, a proportional plus integral amplifier is incorporated in the MTVC signal flow path. The operation of this circuit can be described by considering the response to a step input; the output will initially assume a value determined by the proportional gain and the input amplitude. It will then increase, from this value, as a straight-line function of time. The slope of the line is a function of the input amplitude and the integrator constant. When the input is removed, the output will then drop by the initial value. With no additional inputs the output will theoretically remain constant (in practice, it will slowly decay). The circuit (integrator) provides the following capabilities:

a. Maintain a gimbal deflection after returning the RC to rest.

b. Make corrections with the RC about its rest position, rather than holding a large displacement.

c. With no manual inputs, SC rate is damped out in the RATE CMD configuration.

The selection between the RATE CMD and ACCEL CMD configurations is made by enabling rate signals in the RATE CMD mode with the IGN 2 logic signal present (thrust on). This enables rate BMAG signals to be summed with RC inputs. The position of the BMAG MODE switch determines which rate source (BMAG 1 or 2) is summed, through its associated functional switch. Placing the SCS TVC switch in the ACCEL CMD position disables the rate command mode.

The RATE CMD configuration is analogous to the proportional rate capability described in the ACS (paragraph 2.3.4) except there is no dead-band. With no manual input, the thrust vector is under rate BMAG control. If there is an initial gimbal cg misalignment, an angular acceleration will develop. The rate BMAG, through the proportional gain, will drive the gimbal in the direction necessary to cancel this acceleration. With no integrator, a steady-state rate would be required to hold the necessary gimbal deflection (through cg). However, due to the integrator, the rate is driven to zero. When an RC input (manual) is present, a steady-state vehicle rate will be established so that the integrator input goes to zero when the output value is sufficient to place the thrust vector through the cg. When the manual input is removed the rate is driven to zero.

When rate feedback is inhibited by selecting ACCEL CMD, the RC input must be properly trimmed to position the thrust vector through the cg. However, positioning the thrust vector through the cg only drives the rotational acceleration to zero. Additional adjustments (RC trimming) are necessary to cancel residual rates and obtain the desired attitude and positioning vector.

2.3.5.6 Engine Ignition, Thrust On-Off Logic.

This section describes the configurations available for ignition on-off control. Panel switch positions and/or logic signals necessary for a particular configuration are considered. The functions of output (logic) signals are given.

Redundant d-c power is supplied to redundant SPS coils and solenoid drivers (as shown in figure 2.3-24) via the ΔV THRUST (A and B) switches.

With the switch positions shown in figure 2.3-24, engine ignition is commanded by placing a ground on the low side of SPS coil No. 1. Thrust-off is commanded when the ground is removed. The ground switching can be accomplished in two basic ways. One method is to position the SPS THRUST switch from the NORMAL to the DIRECT ON position for engine turn-on, and later placing the ΔV THRUST A and B from NORMAL to OFF to terminate thrust. The second method is to switch the ground through the solenoid driver as commanded by the thrust on-off logic.

Engine ignition will be commanded by the thrust on-off logic when any one of the thrust-on logic equations shown in figure 2.3-24 is satisfied. The CMC commands thrust-on (equation 1) by supplying a logic 0 to the thrust on-off logic when the SC CONT switch is in the CMC position and the translation controller (TC) is not clockwise ($\overline{CW}$). When the CMC changes the logic signal from a 0 to a 1, thrust-off is commanded.

For the SCS control configuration the SC CONT sw must in the SCS position or the TC handle clockwise (CW). A thrust-on enabling signal is obtained from the EMS/ΔV display. Thrust-on is then commanded by

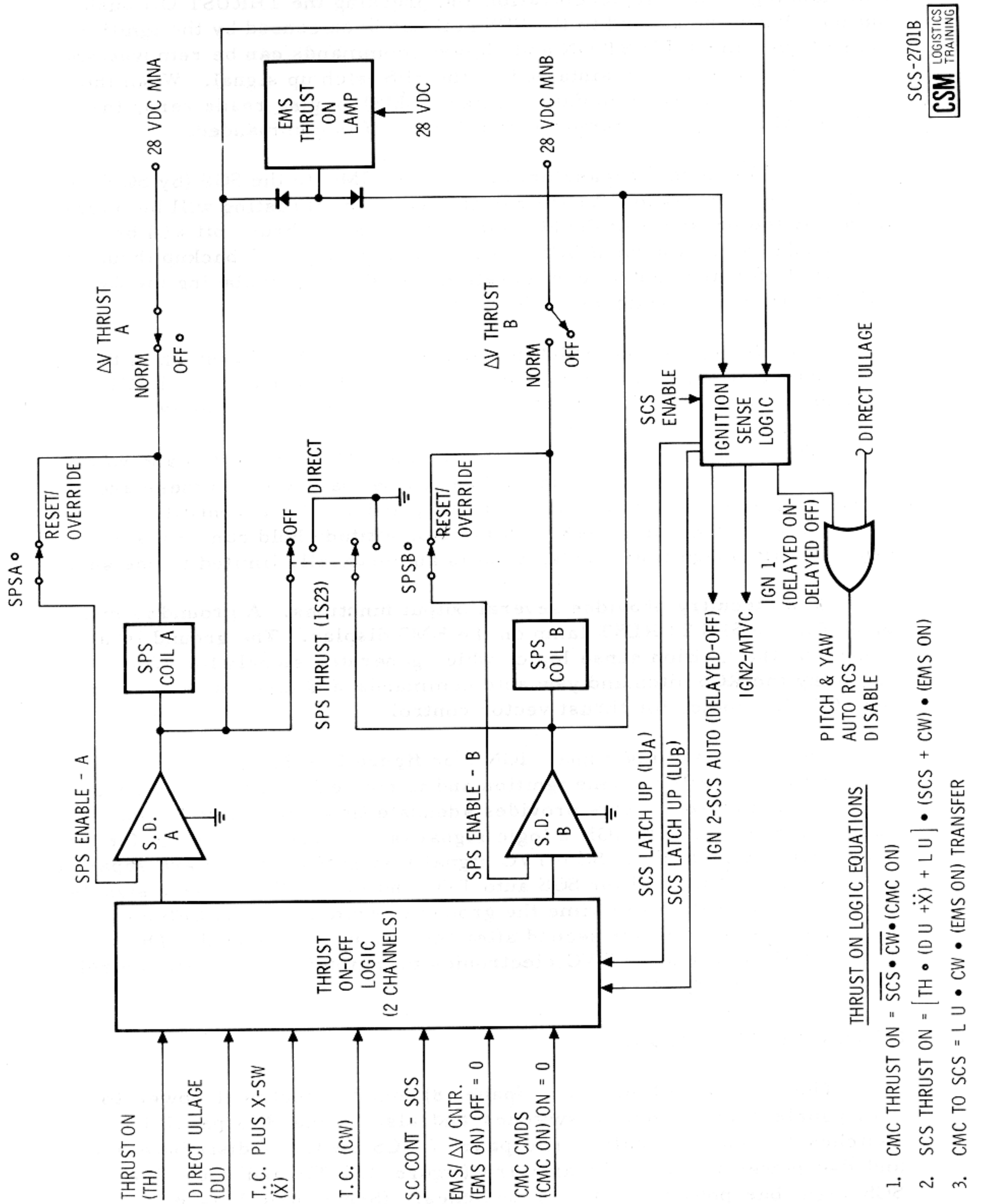

Figure 2.3-24. Engine Ignition-Thrust On-Off Logic

SCS-2701B

CSM LOGISTICS TRAINING

SCS

commanding a +X-axis acceleration and pressing the THRUST ON pushbutton. When the ground to the SPS coil has been sensed by the ignition sense logic, the THRUST ON and +X-axis commands can be removed and engine ignition will be maintained by the SPS latch up signal. When the ΔV counter on the entry monitor system (EMS) display reads zero, the EMS enabling signal is removed and thrust-off is commanded.

If TVC control is transferred from the CMC to the SCS (by SC CONT switch to SCS or TC to CW) after engine ignition, thrusting will be maintained by the presence of the SCS latch up signal. Thrust-off will be commanded as in a normal SCS control configuration. A backup thrust-off command, for any control configuration, is obtained by placing the ΔV THRUST (A and B) switches to the OFF position.

The +X logic signal which is necessary to enable thrust-on in the SCS configuration, can be obtained from either the DIRECT ULLAGE pushbutton or the TC +X contacts. The difference between the two commands are:

a. Direct ullage uses the direct coils and inhibits the pitch and yaw solenoid drivers; thus, attitude hold cannot be maintained in these axes. Ullage-ignition overlap time is completely under manual control.

b. When commanding A+X with the TC, attitude hold can be maintained. Ullage-ignition overlap time is automatically limited to one second.

The circuitry provides several output functions. A ground is provided for the SPS THRUST lamp on the EMS display. The ground is also sensed by the ignition sense logic, which generates signals for both disabling the RCS pitch and yaw auto commands and also for configuring the SCS electronics for thrust vector control.

The RCS disabling signal, IGN 1 on figure 2.3-24, is not present until one second after engine ignition and is not removed until one second after engine turn-off. This provides adequate time for engine thrust buildup and decay. The IGN 2 logic signal is required in the logic for the functional switches in the SCS-TVC signal flow paths. There are separate IGN 2 signals generated for SCS auto TVC and for MTVC. These signals are generated at the same time the ground is switched to the SPS coil, but are not removed until one second after the ground is removed. The delayed OFF enables the TVC electronics to maintain spacecraft control during thrust decay.

2.3.6 POWER DISTRIBUTION.

The SCS circuit breakers (panel 8) supply electrical power to both panels 1 and 7 power switches and also to the SCS panel 1 switches for logic signals. The panel 7 SCS switches distribute a-c and d-c power to the SCS hardware (figure 2.3-26) and route the SCS logic bus power to panel 1 switches. (See figure 2.3-26.) The power switching for the two rotation hand controllers and the translation hand controller is on panel 1. (See figure 2.3-26.)

Figure 2.3-25. Deleted

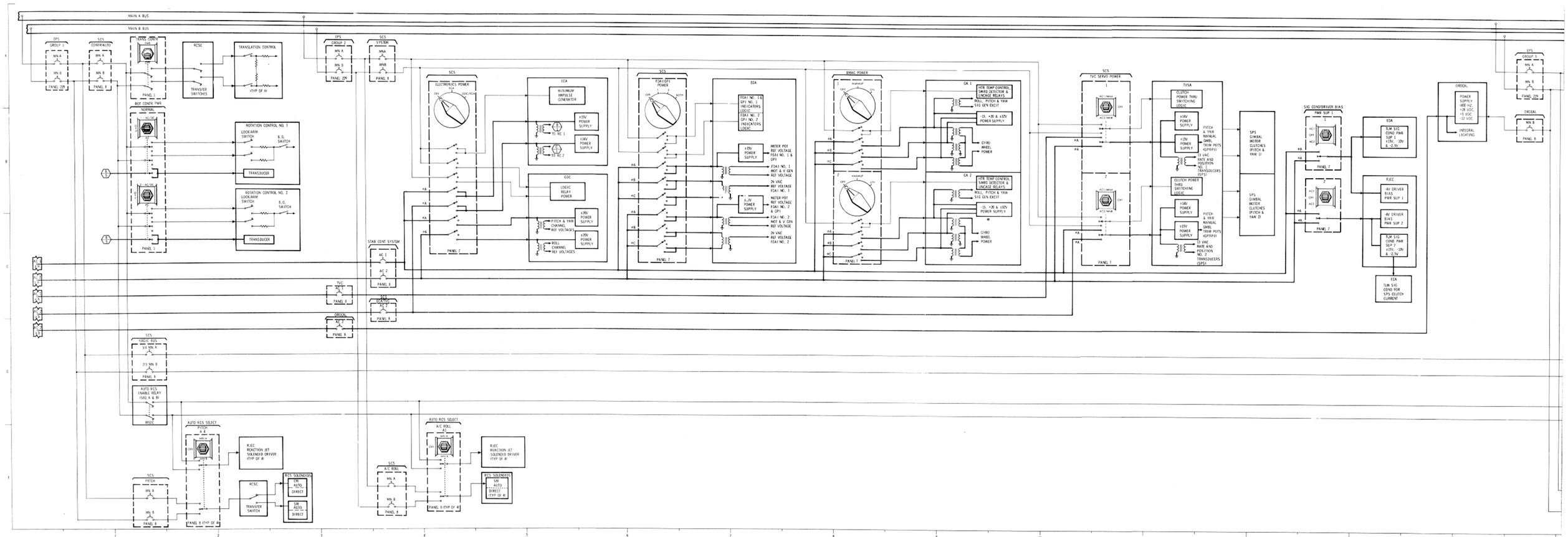

Figure 2.3-26. SCS D-C Power Distribution (Sheet 1 of 2)

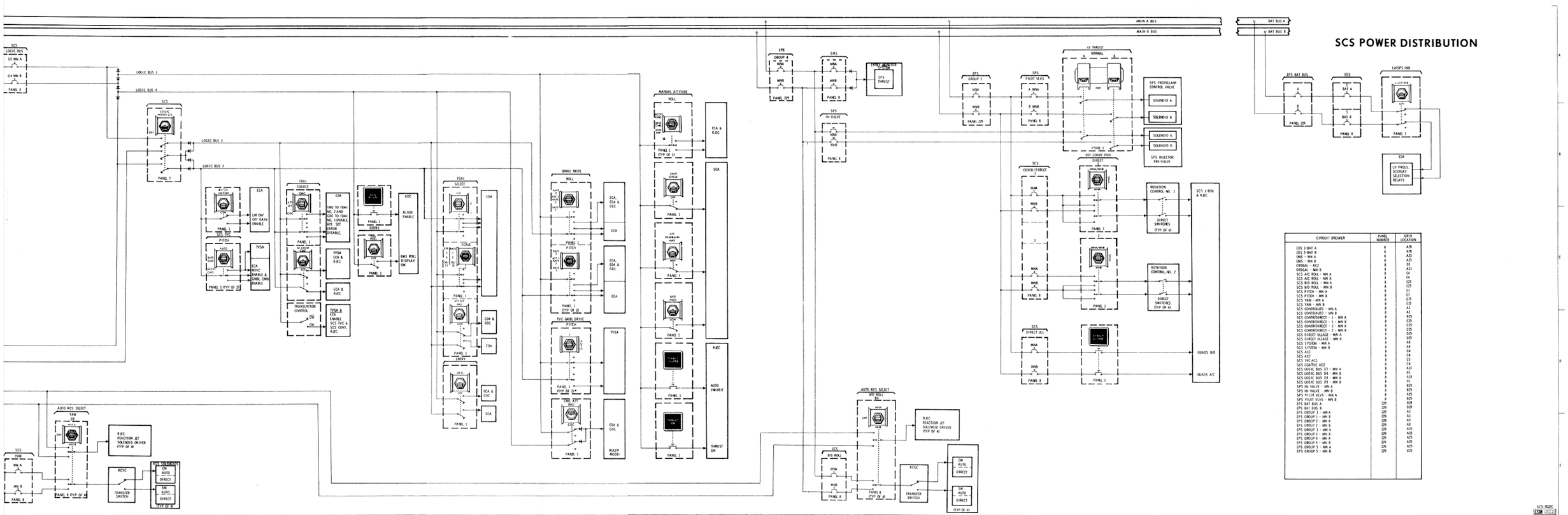

CIRCUIT BREAKER	PANEL NUMBER	GRID LOCATION
EDS 3-BAT A	8	A28
EDS 3-BAT B	8	B28
EMS - MN A	8	A20
EMS - MN B	8	A20
ORDEAL - AC2	8	D3
ORDEAL - MN B	8	A13
SCS A/C ROLL - MN A	8	E4
SCS A/C ROLL - MN B	8	E4
SCS B/D ROLL - MN A	8	E23
SCS B/D ROLL - MN B	8	E23
SCS PITCH - MN A	8	E1
SCS PITCH - MN B	8	E1
SCS YAW - MN A	8	E15
SCS YAW - MN B	8	E15
SCS CONTRAUTO - MN A	8	A1
SCS CONTRAUTO - MN B	8	A1
SCS CONTRDIRECT - 1 - MN A	8	B25
SCS CONTRDIRECT - 1 - MN B	8	C25
SCS CONTRDIRECT - 2 - MN A	8	C25
SCS CONTRDIRECT - 2 - MN B	8	D25
SCS DIRECT UELAGE - MN A	8	B25
SCS DIRECT UELAGE - MN B	8	D25
SCS SYSTEM - MN A	8	A4
SCS SYSTEM - MN B	8	A4
SCS AC1	8	C4
SCS AC2	8	C4
SCS TVC AC1	8	C3
SCS LOATVC AC2	8	C4
SCS LOGIC BUS 1/2 - MN A	8	A15
SCS LOGIC BUS 3/4 - MN B	8	B1
SCS LOGIC BUS 3/4 - MN A	8	A15
SCS LOGIC BUS 3/4 - MN B	8	B1
SPS HV VALVE - MN A	8	B23
SPS HV VALVE - MN B	8	B23
SPS PILOT VLVS - MN A	8	A25
SPS PILOT VLVS - MN B	8	B25
EPS BAT BUS A	229	B28
EPS BAT BUS B	229	B28
EPS GROUP 1 - MN A	229	A1
EPS GROUP 1 - MN B	229	A1
EPS GROUP 2 - MN A	229	A3
EPS GROUP 2 - MN B	229	A3
EPS GROUP 3 - MN A	229	A15
EPS GROUP 3 - MN B	229	A15
EPS GROUP 4 - MN A	229	A25
EPS GROUP 4 - MN B	229	A25
EPS GROUP 5 - MN A	229	A25
EPS GROUP 5 - MN B	229	B25

Figure 2.3-26. SCS D-C Power Distribution (Sheet 2 of 2)

Figure 2.3-27. Deleted

The SCS performance data is included in the CSM Spacecraft Operational Data Book (SNA-8-D-27). For the SCS operational limitations and restrictions refer to AOH, Volume 2, including the Malfunction Procedures.

2.3.7 ENTRY MONITOR SYSTEM.

The entry monitor system (EMS) provides a visual monitor of automatic primary guidance navigation and control system (PGNCS) entries and delta velocity maneuvers. The EMS also provides sufficient display data to permit manual entries in the event of PGNCS malfunctions together with a command sent to the SCS for SPS engine cutoff. The delta velocity display can also be used as the cue to initiate manual thrust-off commands if the automatic-off commands malfunction. During rendezvous the EMS provides a display of VHF ranging information.

Self-test provisions are provided by a function switch for the three operational modes (entry, delta V, and VHF ranging) to provide maximum system confidence prior to actual use.

The EMS performance data is included in the CSM Spacecraft Operational Data Book (SNA-8-D-27). For the EMS operational limitations and restrictions refer to AOH, Volume 2, including the Malfunction Procedures.

2.3.7.1 Entry Functions.

The EMS provides five displays and/or indications that are used to monitor an automatic entry or to aid in performing a manual entry.

2.3.7.1.1 Threshold Indicator (.05 G).

The threshold indicator, labeled .05 G, illuminates when the atmospheric deceleration is sensed. The altitude at which this indicator is illuminated is a function of the entry angle (velocity vector with respect to local horizontal), the magnitude of the velocity vector, geographic location and heading, and atmospheric conditions. Bias comparator circuits and timers (figure 2.3-28) are used to initiate this indicator. The signal used to illuminate the indicator is also used internal to the EMS to start the corridor evaluation timer, scroll velocity drive, and range-to-go circuits.

2.3.7.1.2 Roll Stability Indicator.

The roll stability indicator (RSI) provides an indication of lift vector position throughout entry. With the ATT SET switch in the GDC position, the RSI will be aligned prior to 0.05G by rotating the yaw thumbwheel on the attitude set control panel with the EMS ROLL switch in the entry position while pressing the GDC ALIGN button. During entry, stability axis roll attitude will be supplied to the RSI by the gyro display coupler. There are no degree markings on the display, but the equivalent readout will be zero when the RSI points toward the top of the control panel. During the entry RSI rotates in the opposite direction to the spacecraft roll.

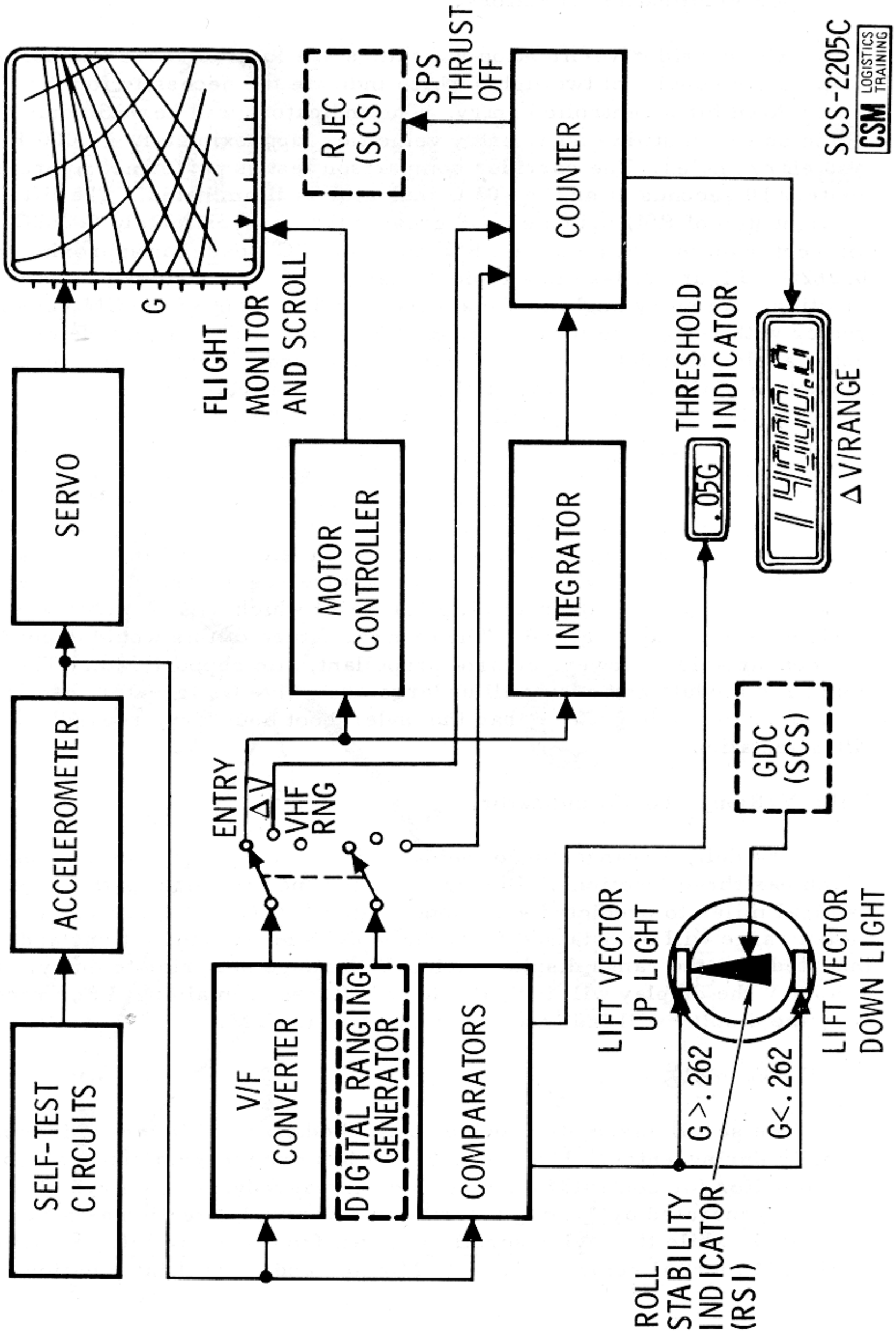

Figure 2.3-28. EMS Block Diagram

2.3.7.1.3 Corridor Verification Indicators.

The corridor verification indicators are located above and below the RSI. They consist of two lights which indicate the necessity for lift vector up or down for a controlled entry. The indicators will be valid only for vehicles which utilize lunar entry velocities (approximately 35,000 FPS) and entry angles. The corridor comparison test is performed approximately 10 seconds after the .05 G indicator is illuminated. The lift vector up light (top of RSI) indicates "G" greater than approximately 0.262G. The lift vector down light (bottom of RSI) indicates "G" less than approximately 0.262G. Figure 2.3-29 is a typical example of the corridor evaluation function. An entry angle is the angular displacement of the CM velocity vector with respect to local horizontal at 0.05G. The magnitude of the entry angles that determines the capture and undershoot boundaries will be a function of CM lift-to-drag (L/D) ratio. The angles shown are for a L/D of 0.3 to 0.4. The EMS positive lift overshoot boundary is that entry angle that produces approximately 0.262G at approximately 10 seconds after the .05 G indicator is illuminated. An entry angle greater than the EMS positive lift overshoot boundary will cause the upper corridor verification light to be illuminated. Conversely, an entry angle less than the positive overshoot boundary will light the lower corridor light. Entry angles less than the capture boundary will result in noncapture regardless of lift orientation. Noncapture would result in an elliptical orbit which will re-enter when perigee is again approached. The critical nature of this would depend on CM consumables: power, control propellant, life support, etc. The command module and crew will undergo excessive Gs (greater than 10G) with an entry angle greater than the undershoot boundary, regardless of lift orientation.

2.3.7.1.4 Delta V/Range-To-Go Indicator.

The delta V/range-to-go indicator is an electronic numeric readout which has three functions. During entry the inertial flight path distance in nautical miles to predicted splashdown after 0.05G is displayed. The predicted range will be obtained from the PGNCS or ground stations and inserted into the range display during EMS range set prior to entry. For a delta V the display will indicate the ΔV (ft/sec) remaining. For rendezvous the display will indicate the distance to the LM.

2.3.7.1.5 Scroll Assembly.

The scroll assembly provides a scribed trace of G versus inertial velocity during entry. The mylar scroll has printed guidelines which provide monitor (or control) information during aerodynamic entry. The entry trace is generated by driving a scribe in a vertical direction as a function of G level, while the mylar scroll is driven from right to left proportional to the CM inertial velocity change. Monitor and control information for

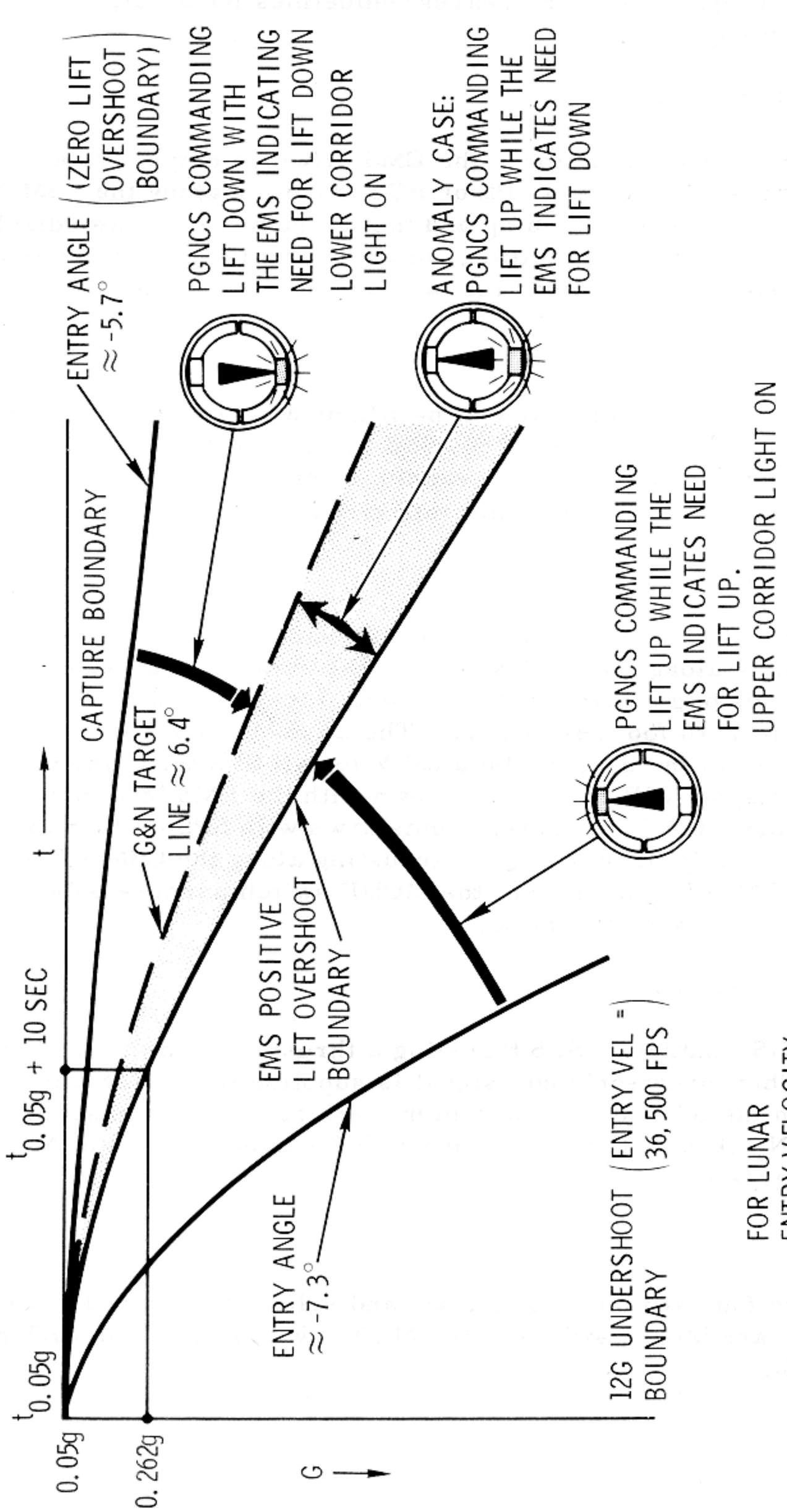

Figure 2.3-29. EMS Corridor Evaluation

SCS-2208B

CSM LOGISTICS TRAINING

SCS

safe entry and range potential can be observed by comparing the slope of the entry trace to the slope of the nearest guidelines (G onset, G offset and range potential).

2.3.7.2 Delta Velocity Functions.

In addition to entry functions, the EMS provides outputs related to delta velocity maneuvers during SPS or RCS thrusting along the CSM X-axis. Both the "SPS THRUST" lamp and the ΔV numeric counter display information during a ΔV. In addition, an automatic thrust-off command signal is supplied to the SCS when the ΔV counter reaches zero.

2.3.7.2.1 SPS Thrust-On Indicator.

The SPS thrust-on indicator will be illuminated any time a ground is present on the low side of either of the SPS bipropellant solenoid control valves if either of the EMS circuit breakers on panel 8 are set. None of the EMS or MDC switches will inhibit this circuit.

2.3.7.2.2 Delta Velocity Indicator.

The electro-luminescent (EL) numeric readout displays the delta velocity remaining along the CSM X-axis. The numeric display has the capability of displaying a maximum of 14,000.0 fps down to a -1000.0 fps. The readout is to 1/10 foot per second. The ΔV/EMS SET rocker switch will be used to set in the desired delta (Δ) V for all SPS thrusting maneuvers. The ΔV display will count up or down with the EMS MODE switch in the NORMAL position. The display counts down with SPS or RCS thrusting along the CSM +X-axis or up with RCS thrusting along the CSM -X-axis. The BACKUP/VHF RNG position of the MODE switch permits only a decreasing readout during thrusting.

2.3.7.2.3 SPS Thrust-Off Command.

During SCS-controlled SPS thrusting a thrust-off command is supplied by the EMS. This thrust-off logic signal is supplied to the SPS engine on-off circuit when the ΔV display reads minus values of ΔV. Consequently, the THRUST ON button will not turn on the SPS engine unless the ΔV display reads zero or greater.

2.3.7.3 EMS Switches.

There are four switches to activate and select the desired function in the EMS. They are MODE switch, FUNCTION switch, ΔV/EMS SET switch, and GTA switch.

2.3.7.3.1 MODE Switch.

The MODE switch has three positions: NORMAL, STBY, and BACKUP/VHF RNG. The STBY position applies power to the EMS circuits; it inhibits system operation but does not inhibit set functions. The NORMAL position permits the self-tests to function. It also is the normal position for operations when the FUNCTION switch is in the ENTRY and ΔV positions. The BACKUP/VHF RNG position is used as a backup in the entry and delta V operations and is the proper position during VHF ranging. The BACKUP/VHF RNG position will be used as a backup to initiate the scroll velocity drive and the range display countdown in the event of failure of the .05 G circuits. The BACKUP/VHF RNG position energizes the .05 G light, but does not activate the corridor verification circuits for a display.

2.3.7.3.2 FUNCTION Switch.

The FUNCTION switch is a 12-position switch which is used to select the desired function in the EMS. Three positions are used for delta V operations. Eight positions are used for entry, entry set and self-test. The remaining position if OFF. One position is used for VHF ranging.

Switch Position	Function
OFF	Deactivates the EMS except the SPS THRUST ON light and the roll stability indicator.
EMS test 1	Tests lower trip point of 0.05 G - threshold comparator and enables slewing of the scroll.
EMS test 2	Tests the high trip point of the .05 G - threshold comparator.
EMS test 3	Tests lower trip point of the corridor verification comparator and enables slewing of the ΔV/RANGE display for EMS test 4 operations.
EMS test 4	Tests the range-to-go integrator circuits, G servo circuits, G-V plotter and range-to-go circuits.
EMS test 5	Tests high trip point of corridor verification comparator and enables slewing of scroll.
RNG SET	Establishes circuitry for slewing the ΔV/RANGE display.
Vo SET	Establishes circuitry for slewing the scroll to the predicted inertial velocity at 0.05G.

Switch Position	Function
ENTRY	Operational position for monitoring the CM earth atmosphere entry mode.
ΔV TEST	Operational position for self-test of delta V circuits.
ΔV SET/VHF RNG	Establishes circuitry for slewing the ΔV/RANGE display. Enables VHF ranging display.
ΔV	Operational position for accelerometer to drive the ΔV/RANGE display for X-axis accelerations.

2.3.7.3.3 ΔV/EMS SET Switch.

The ΔV/EMS SET switch, a five-position rocker switch, is used to drive either the ΔV/RANGE display or the EMS scroll. With the FUNCTION switch in the ΔV SET/VHF RNG, RNG SET, and EMS TEST 3, depressing the ΔV/EMS SET switch from null to a soft stop (either INCR or DECR) will change the display readout at 0.25 unit per second. Depressing the ΔV/EMS SET switch through a soft stop to a hard stop results in a change of 127.5 units per second. With the FUNCTION switch in the Vo SET, EMS TEST 1, and TEST 5 position, depressing the ΔV/EMS SET switch results in driving the EMS scroll. Depressing the ΔV/EMS SET switch to the soft stop drives the scroll at approximately 0.0164 inch per second (30 fps per second). Depressing through to the hard stop drives the scroll at approximately 0.263 inch per second (480 fps per second). The scroll mechanism puts a constraint on the reverse slewing of the scroll (ΔV/EMS SET switch INCR). The scroll may be slewed only one inch to the right after scroll slewings to the left of at least three inches.

2.3.7.3.4 GTA Switch.

The GTA switch provides a ground test capability. With the coverplate removed, the GTA switch will be placed up to simulate 0G in the vertical stack configuration of the SC. An adjustment pot is available to calibrate 0G when the GTA switch is on and the EMS is operating. For the coverplate to be closed, the GTA switch must be off which removes the simulated 0G function for ground test.

2.3.7.4 Entry Scroll.

The EMS mylar scroll, contained in the EMS scroll assembly, contains four entry patterns together with entry in-flight test patterns and the instructions for entry, delta V and VHF ranging. (See figure 2.3-30.)

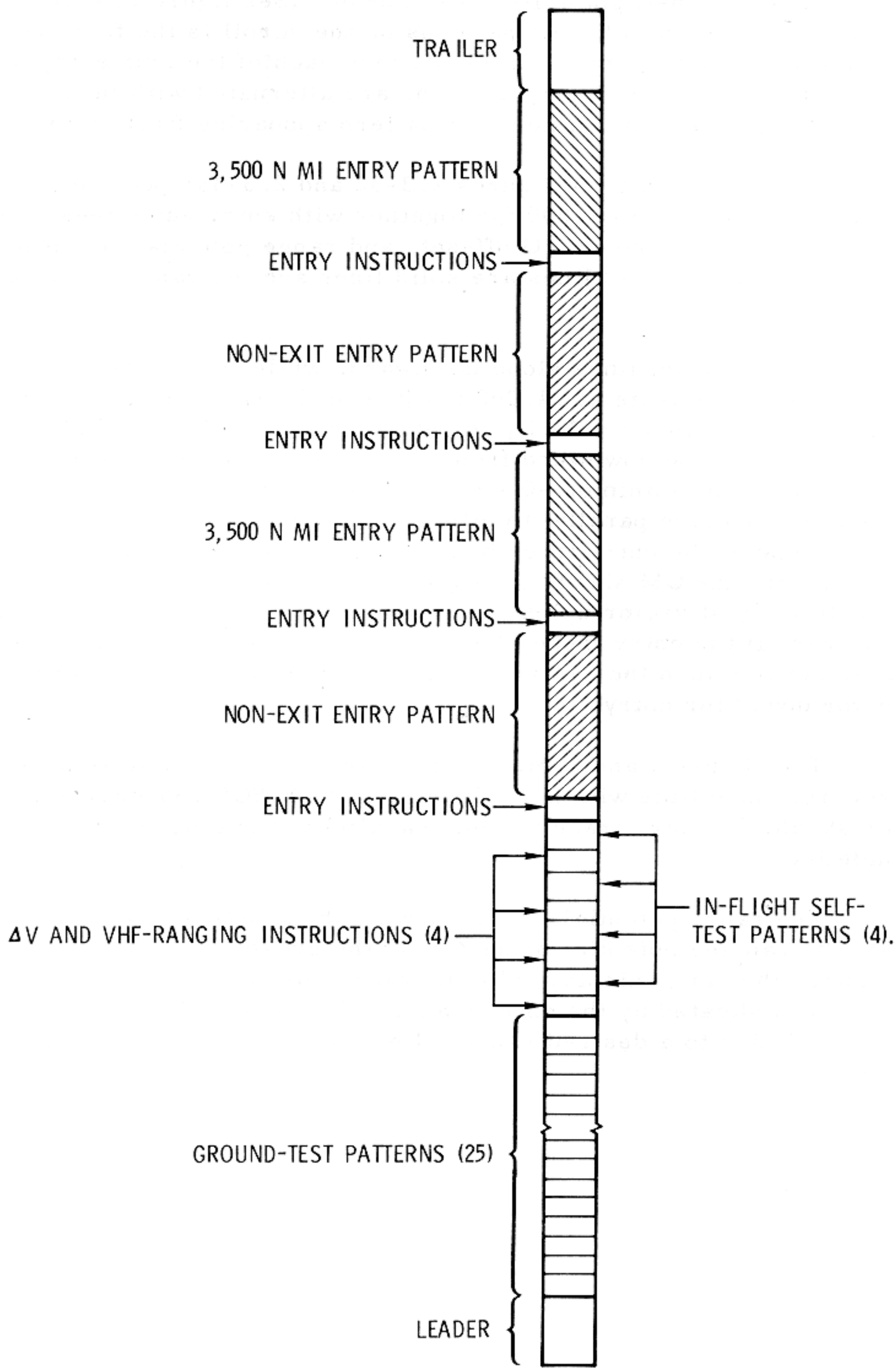

SCS-6003

SCS

Figure 2.3-30. EMS Scroll Format

There are four sets of ΔV and VHF ranging instructions that are alternated with four entry in-flight self-test patterns. (See figure 2.3-31.) Following the fourth in-flight self-test patterns on the scroll is the first set of entry instructions. Entry instructions precede each of the four entry patterns. Lunar-return non-exit entry patterns are alternated with lunar-return 3500 NM exit patterns, a non-exit pattern appearing first on the scroll.

Each entry pattern (figures 2.3-32 and 2.3-33) has velocity increments from 37,000 to 4,000 fps together with entry guidelines. These lines are called G on-set, G off-set, and range potential guidelines. The G on-set and G off-set lines are solid lines and the range potential lines are broken.

The G on-set lines slope downward, while the G off-set lines ray upward and terminate at 24,000 fps just to the right of the vertical line at 25,500 fps (minimum velocity for earth orbit). Below 24,000 fps the G on-set lines slope downward from the full-lift profile line which represents the steady-state minimum-G entry profile. During entry the scribe trace should not become parallel to either the nearest G on-set or G off-set line. If the slope of the entry trace becomes more negative than the nearest G on-set line, the CM should be oriented such that a positive lift vector orientation (lift vector up) exists in order to prevent excessive G buildup. However, if the entry trace slope becomes more positive than the nearest G off-set line then the CM should be oriented to produce negative lift (lift vector down) for entry.

The G on-set and G off-set lines are designed to allow a 2-second crew response time with a single system RCS/SCS 180-degree roll maneuver should the entry trace become parallel to the tangent of the nearest guideline.

The range potential lines, shown in hundreds of nautical miles, indicate the ranging potential of the CM at the present G level. The crew will compare the range displayed by the range-to-go counter with the range potential indicated by the entry trace. The slope and position of the entry trace relative to a desired ranging line indicates the need for lift vector up or down.

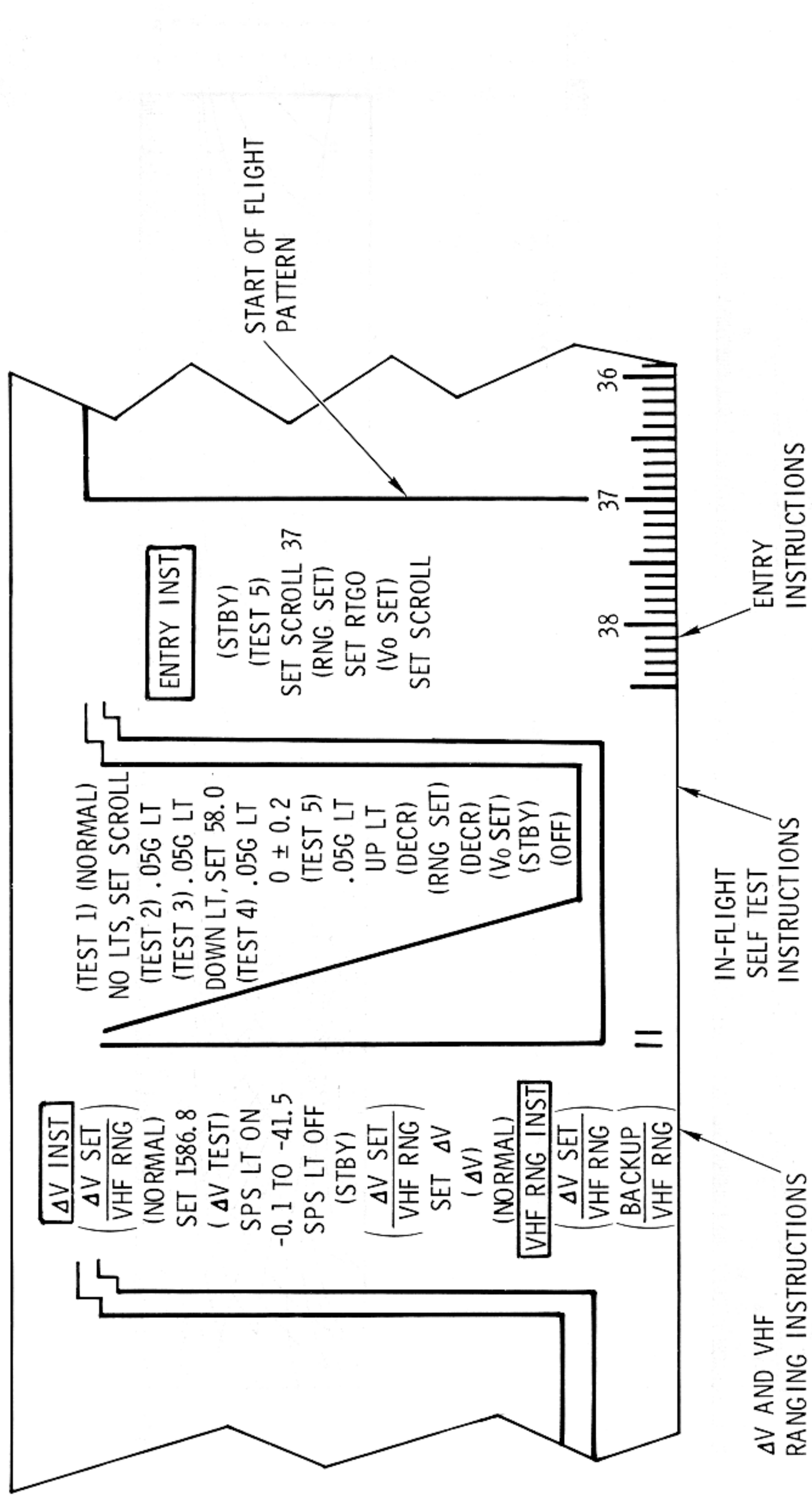

SCS-6004 A

CSM LOGISTICS TRAINING

SCS

Figure 2. EMS In-Flight Instructions for ΔV, VHF Ranging, Self-Test and Entry

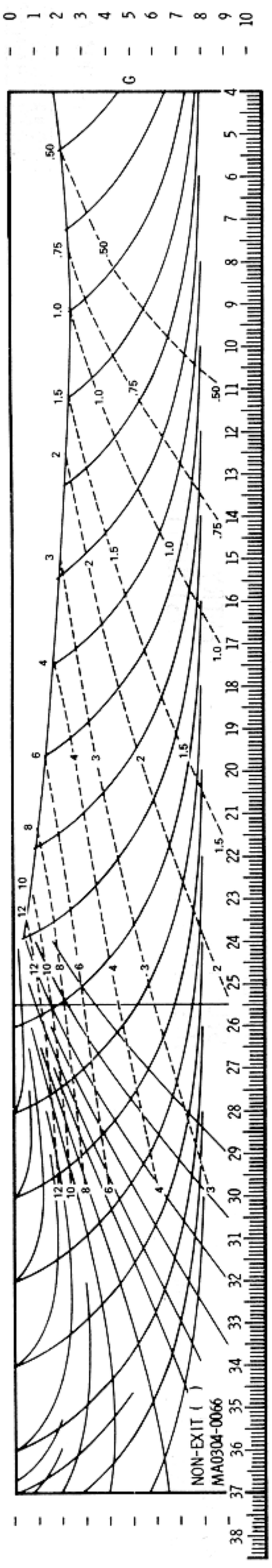

Figure 2.3-32. EMS Lunar Non-Exit Range Limit Pattern (7/22/68)

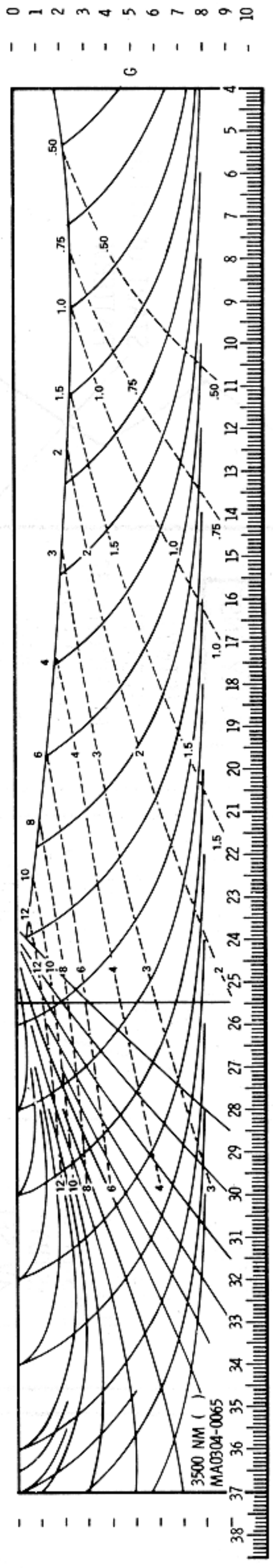

Figure 2.3-33. EMS Lunar 3500 NM Range Limit Pattern (7/22/68)

2.3.7.5 EMS Functional Data Flow.

The following functional discussion of the EMS relates system mechanization to the EMS operation. (See figure 2.3-34.)

2.3.7.5.1 Accelerometer.

The accelerometer, which is aligned to within ±2 degrees of the SC X-axis, is the only sensor in the EMS. It has three outputs: low level G to threshold and corridor circuits, high level G to the flight monitor G axis during entry, and an output to the A/D converter which is used to drive the ΔV/RANGE display and mylar scroll. The difference in the low and high level G outputs is scale factor.

2.3.7.5.2 Threshold and Corridor Verification Circuits.

The threshold and corridor verification circuits use the accelerometer low level G output. The .05G comparator will trigger and illuminate the threshold light (.05 G) if a G level of 0.05G ± 0.005G is present for 1±0.5 seconds. If the G level drops to 0.02G ± 0.005G, the light will be extinguished. The corridor evaluation will occur 10.053±0.025 seconds after the .05 G threshold lamp is illuminated. The lift vector up light will illuminate if the G force is greater than approximately 0.262±0.009G. The litt vector down light will be illuminated if the G force is less than approximately 0.262±0.009G. There will be only one corridor verification light turned ON for corridor evaluation. The corridor lights will be turned off when the flight monitor G axis drive passes the 2G level.

2.3.7.5.3 Scroll Assembly G Axis Drive Circuits.

The scroll assembly G axis drive circuits receive the accelerometer high G level output signal and position the G axis scribe in vertically. The scribe drive is a normal closed-loop servo circuit with velocity and position feedback. The loop is biased from zero by the magnitude of the accelerometer input.

2.3.7.5.4 Scroll Assembly Velocity Axis Drive Circuits.

The scroll assembly velocity axis drive circuits use the accelerometer A/D converter output to drive the scroll from right to left. The A/D converter output is about one pulse for each 0.1 fps of velocity change. The motor control circuits and stepper motor cause the scroll to move from right to left and the present inertial velocity is read on the scroll. Before entry scroll is initialized to the inertial velocity by setting the FUNCTION switch to the Vo SET position and using the ΔV/EMS SET switch to slew the scroll to the predicted inertial velocity value at 0.05G.

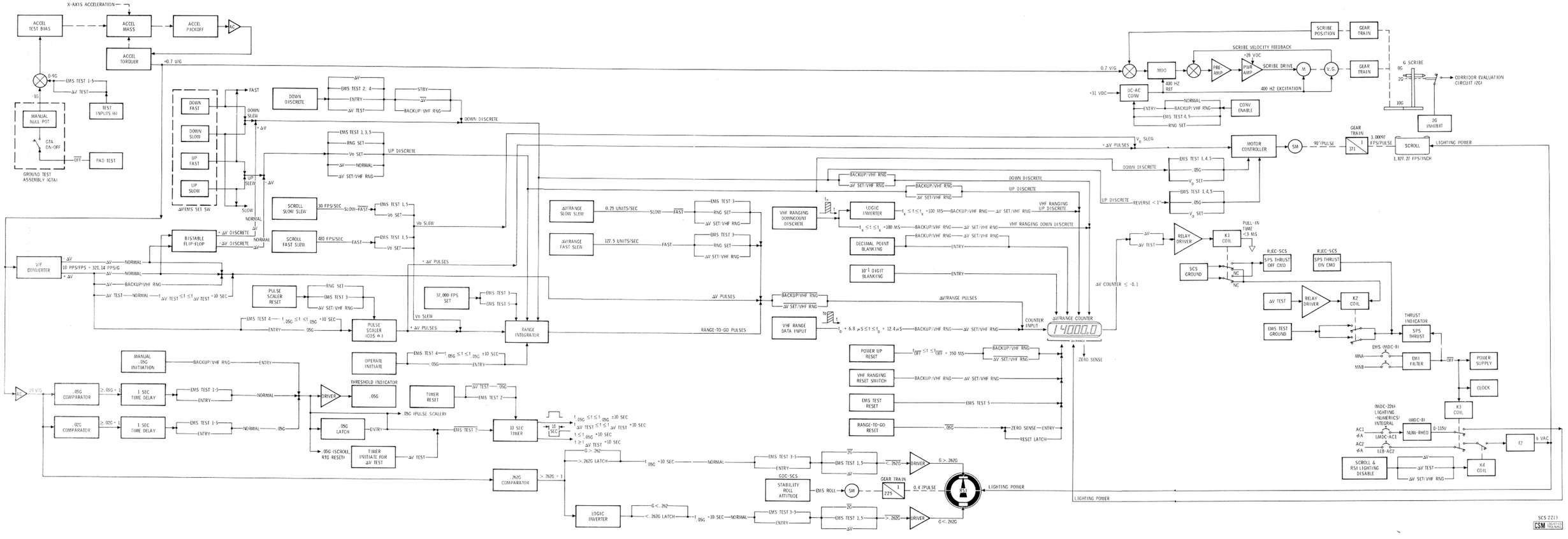

Figure 2.3-34. EMS Functional Block Diagram

2.3.7.5.5 ΔV/RANGE Display Circuits.

The ΔV/RANGE electronics directly controls the numeric display value except during VHF ranging operations. The display will be initialized by a combination of the FUNCTION switch and ΔV/EMS SET switch except during VHF ranging operations. During ΔV operations, the accelerometer A/D converter output pulses are used to increment or decrement display value. When the display decreases to a value of -0.1 fps, a signal is supplied to the SCS for an automatic SCS control SPS OFF command. For entry, the display will read range to go, being decremented by the range integrator. The output of the range integrator will decrease as a function of the inertial velocity stored in it at any time. The range integrator is decremented to that it contains the CM present inertial range-to-go if properly initialized. The divider network sends pulses to the flight monitor velocity axis drive in order to drive the scroll from right to left after 0.05G is sensed. If the 0.05G function should fail, placing the MODE switch to the BACKUP/VHF RNG position will initiate the divider network operation to drive the range-to-go display and the flight monitor scroll from right to left as a function of G level.

2.3.7.5.6 Roll Stability Indicator Drive.

The RSI drive function, controlled by the yaw axis of the GDC in the SCS, requires the correct positive of the two ENTRY switches (.05G and EMR ROLL) for its correct operation during entry. This function is described as a normal GDC function in paragraph 2.3.3.2.

2.3.7.5.7 Thrust-Off Function.

The thrust-off function will provide a logic function for a SCS thrust-off command any time the ΔV/RANGE counter goes to -0.1 fps. During a delta V mode operation, a relay energizes and provides a ground to the SCS. This function operates in conjunction with the ΔV and ΔV TEST positions of the FUNCTION switch.

SECTION 2

SUBSECTION 2.4

SERVICE PROPULSION SYSTEM (SPS)
(CSM 106 and Subs)

SPS

2.4.1 FUNCTIONAL DESCRIPTION.

The service propulsion subsystem provides the impulse for all X-axis velocity changes (ΔVs) throughout a mission and the SPS abort capability after the launch escape tower is jettisoned. The SPS consists of a helium pressurization system, a propellant feed system, a propellant gauging and utilization system, and a rocket engine. The oxidizer is inhibited nitrogen tetroxide and the fuel is a blended hydrazine (approximately 50 percent unsymmetrical dimethyl hydrazine and 50 percent anhydrous hydrazine). The pressurizing gas is helium. The system incorporates displays and sensing devices to permit earth-based stations and the crew to monitor its operation. (See figures 2.4-1 and 2.4-2.)

The helium pressure is directed to the helium pressurizing valves which isolate the helium during nonthrusting periods, or allow the helium to pressurize the fuel and oxidizer tanks during thrusting periods. The helium pressure is reduced at the pressure regulators to a desired working pressure. The regulated helium pressure is directed through check valves that permit helium flow in the downstream direction when the pressurizing valves are open, and prevent a reverse flow of propellants during nonthrusting periods. The heat exchangers transfer heat from the propellants to the helium gas to reduce any pressure excursions that may result from a temperature differential between the helium gas and propellants in the tanks. The relief valves maintain the structural integrity of the propellant tank systems if an excessive pressure rise occurs.

The total propellant supply is contained within four similar tanks; an oxidizer storage tank, oxidizer sump tank, fuel storage tank, and fuel sump tank (figures 2.4-1, 2.4-2, and 2.4-3). The storage and sump tanks for each propellant system are connected in series by a single transfer line. The regulated helium enters the fuel and oxidizer storage tank, pressurizing the storage tank propellants, and forces the propellant to an outlet in the storage tank which is directed through a transfer line into the respective sump tank standpipe pressurizing the propellants in the sump tank. The propellant in the sump tank is directed to the exit end into a propellant retention reservoir. Sufficient propellants are retained in the

retention reservoir and at the tank outlets to permit engine restart capability in a 0-g condition when the SPS propellant quantity remaining is greater than 22,300 pounds (56.4%) without conducting an SM RCS ullage maneuver prior to an SPS engine thrusting period. An ullage maneuver is mandatory prior to any SPS thrusting period when the SPS propellant quantity remaining is at or less than 22,300 pounds (56.4%). An ullage maneuver is also mandatory prior to any SPS thrusting period following all docked LM DPS burns even though the SPS propellant quantity is at or greater than 22,300 pounds (56.4%). The propellants exit from the respective sump tanks into a single line to the heat exchanger.

A propellant utilization valve is installed in the oxidizer line. The propellant utilization valve is powered only during SPS thrusting periods. The propellant utilization valve aids in achieving simultaneous propellant depletion. The propellant supply is connected from the sump tanks to the engine interface flange.

The propellants flow from the propellant sump tank, through their respective plumbing, to the main propellant orifices and filters, to the bipropellant valve. The bipropellant valve assembly contains pneumatically controlled main propellant valves that distribute the propellants to the engine injector.

The thrust chamber consists of an engine injector, combustion chamber, and exhaust nozzle extension. The engine injector distributes the propellants through orifices in the injector face where the fuel and oxidizer impinge, atomize, and ignite. The combustion chamber is ablatively cooled. The exhaust nozzle extension is radiation cooled.

The engine assembly is mounted to the structure of the SM. It is gimbaled to permit thrust vector alignment through the center of mass prior to thrust initiation and thrust vector control during a thrusting period.

Propellant quantity is measured by two separate sensing systems: primary and auxiliary. The sensing systems are powered only during thrust-on periods because of the capacitance and point sensor measuring techniques. The capacitance and point sensor linearity would not provide accurate indications during the 0-g nonSPS thrusting periods.

The control of the subsystem is automatic with provisions for manual backup.

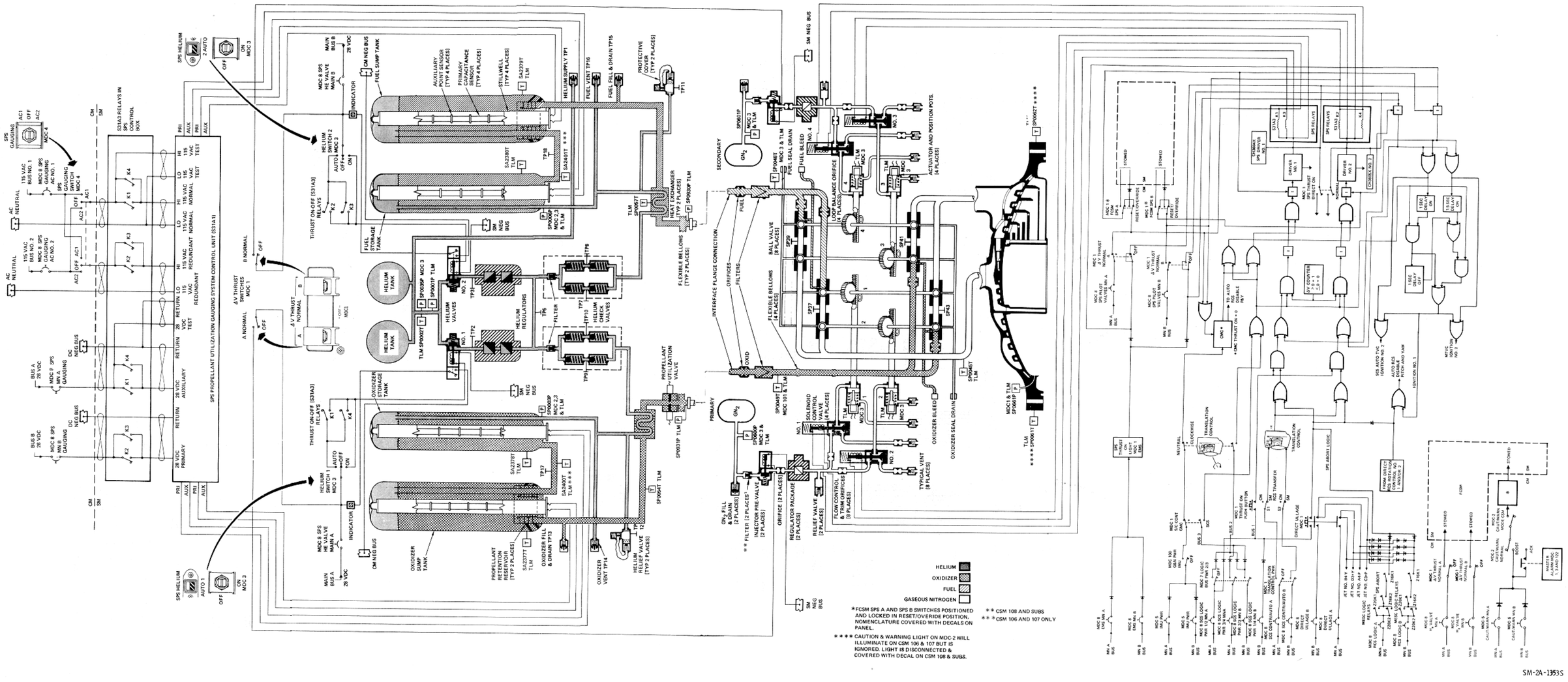

Figure 2.4-1. SPS Functional Flow Diagram (CSM 106 Thru CSM 111)

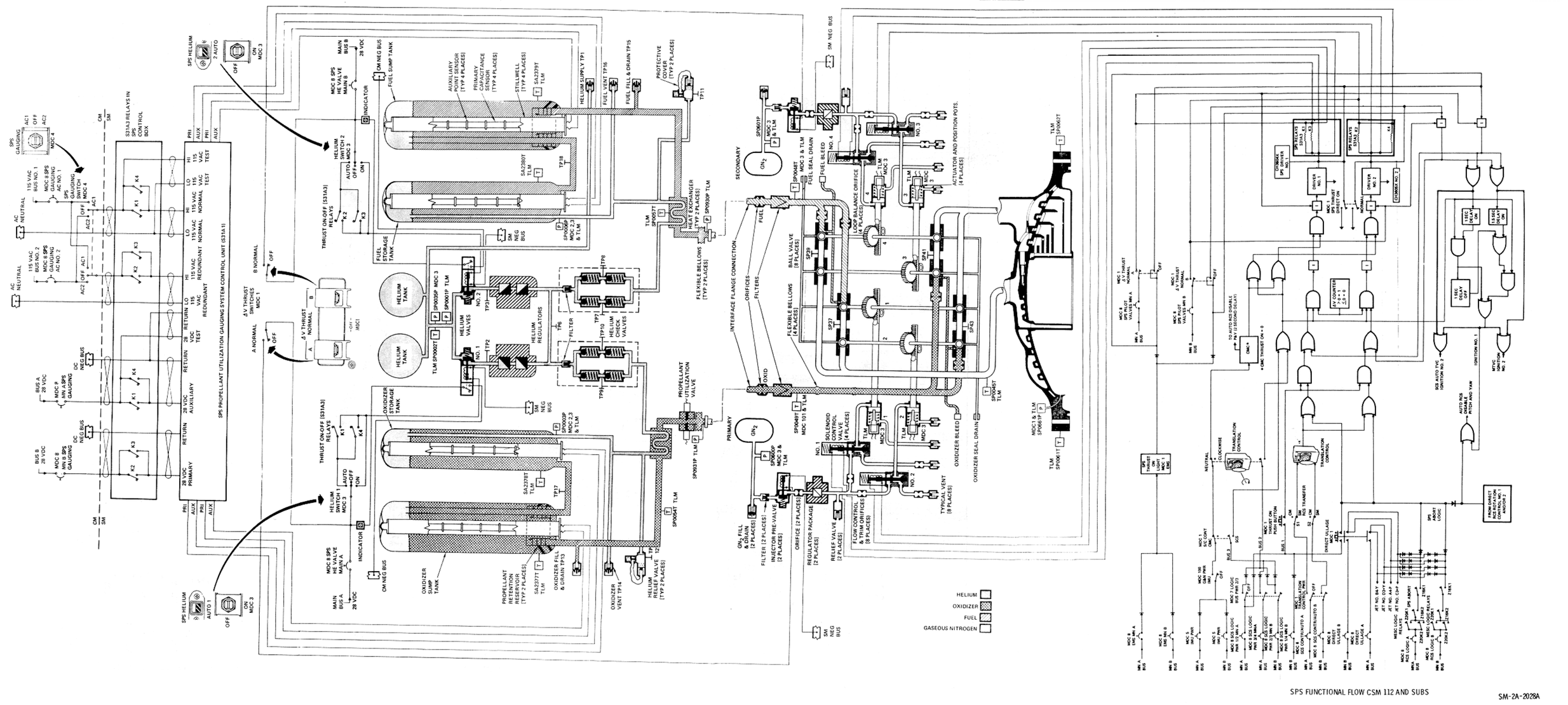

SPS FUNCTIONAL FLOW CSM 112 AND SUBS

SM-2A-2028A

Figure 2.4-2. SPS Functional Flow Diagram (CSM 112 and Subs)

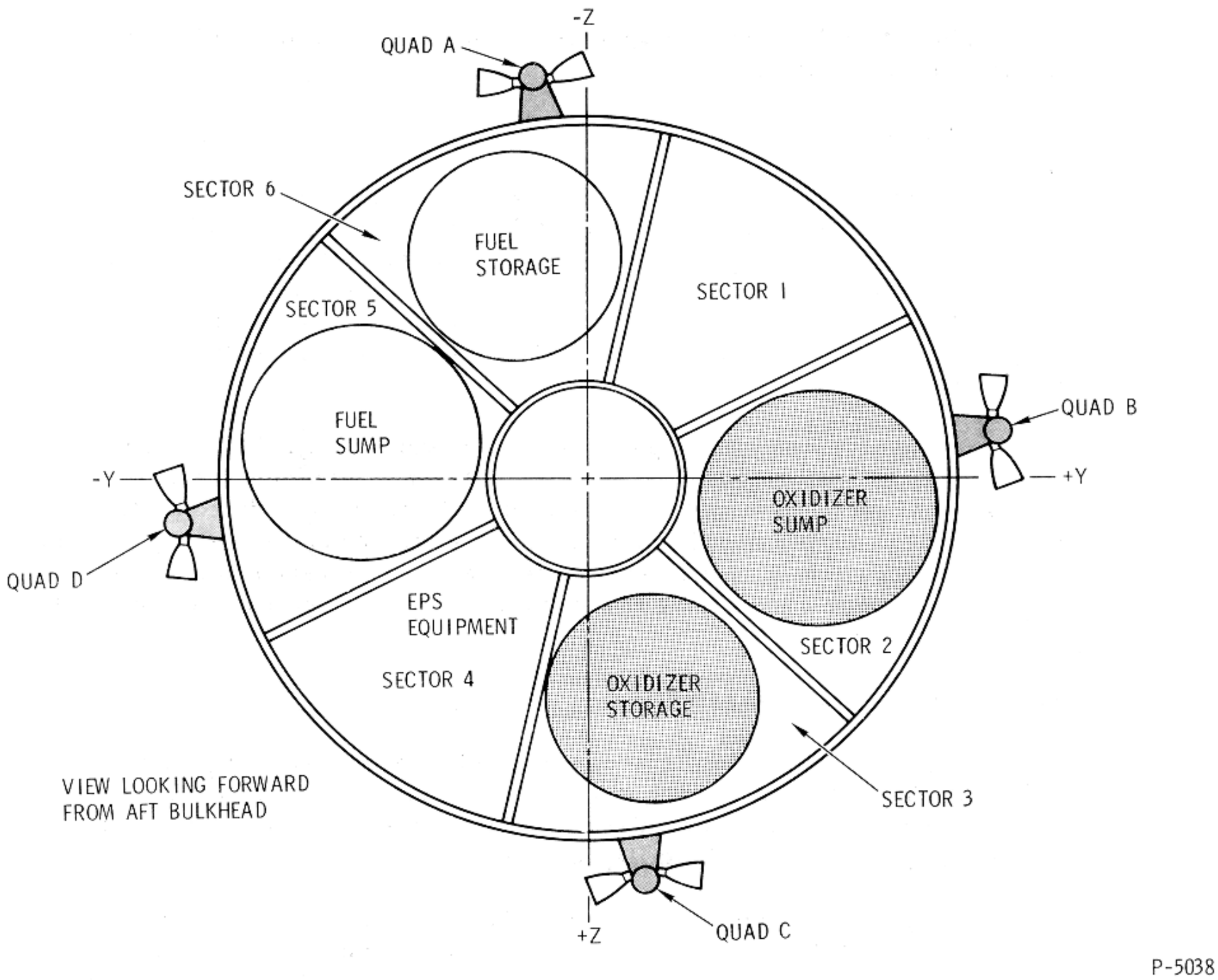

Figure 2.4-3. Service Module Sectors

2.4.2 MAJOR COMPONENT/SUBSYSTEM DESCRIPTION.

2.4.2.1 Pressurization Subsystem.

The pressurization subsystem consists of two helium tanks, two helium pressurizing valves, two dual pressure regulator assemblies, two dual check valve assemblies, two pressure relief valves, and two heat exchangers. The critical components are redundant to increase reliability.

2.4.2.1.1 Helium Tanks.

The two helium supply spherical pressure vessels are located in the center section of the SM.

2.4.2.1.2 Helium Pressurizing Valves.

The helium valves are continuous-duty solenoid-operated. The valves are energized open and spring-loaded closed. The SPS He VLV switches on MDC-3 permit automatic or manual control of the valves. With the switches in the AUTO position, the valves are automatically controlled by a thrust ON-OFF signal. The valves are controlled manually by placing the switches to the ON (valve open) and OFF (valve closed) positions.

Each valve contains a position switch which controls a position (talk-back) indicator above each switch. When the valves are closed, the position switch is open and the indicator is barber pole (diagonal lines), the indication during nonSPS thrusting periods. When the valves are open, the position switch is closed and the indicator is powered to gray (same color as the panel) indicating the valve is open, the indication during SPS thrusting periods.

2.4.2.1.3 Pressure Regulator Assemblies.

Pressure regulation is accomplished by a pressure-regulating assembly downstream of each helium pressurizing valve. Each assembly contains a primary and secondary regulator in series, and a pressure surge damper and filter installed on the inlet to each regulating unit.

The primary regulator is normally the controlling regulator. The secondary regulator is normally open during a dynamic flow condition. The secondary regulator will not become the controlling regulator until the primary regulator allows a higher pressure than normal and allows the secondary regulator to function. All regulator pressures are in reference to a bellows assembly that is vented to ambient.

Only one of the parallel regulator assemblies regulates helium pressure under dynamic conditions. The downstream pressure causes the second assembly to lock up (close). When the regulated pressure decreases below the lockup pressure of the nonoperating assembly, that assembly becomes operational.

2.4.2.1.4 Check Valve Assemblies.

Each assembly contains four independent check valves connected in a series-parallel configuration for added redundancy. The check valves provide a positive checking action against a reverse flow of propellant liquid and/or vapor, and permit helium pressure to be directed to the propellant tanks. Filters are incorporated in the inlet to each check valve assembly and each test port (figures 2.4-1 and 2.4-2).

2.4.2.1.5 Helium Pressure Relief Valves.

The pressure relief valves consist of a relief valve, a burst diaphragm, and a filter.

In the event excessive helium and/or propellant vapor ruptures the burst diaphragm, the relief valve opens and vents the applicable system. The relief valve will close and reseal after the excessive pressure has returned to the operating level. The burst diaphragm provides a more positive seal of helium than a relief valve. The filter prevents any fragments from the (nonfragmentation type) diaphragm from entering onto the relief valve seat.

A pressure bleed device is incorporated between the burst diaphragm and relief valve. The bleed valve vents the cavity between the burst diaphragm and relief valve in the event of any leakage from the diaphragm. The bleed device is normally open and will close when the pressure increases to a predetermined pressure.

A protective cover is installed over the relief valve vent port and bleed valve cavity port to prevent moisture accumulation and foreign matter entrance. The covers are left in place at lift-off.

2.4.2.1.6 Heat Exchangers.

Each unit is a line-mounted, counterflow heat exchanger consisting of the helium pressurization line coiled helically within an enlarged section of the propellant supply line. The helium gas, flowing through the coiled line, approaches the temperature of the propellant prior to entry into the respective storage tanks, thus reducing pressure excursions to a minimum.

2.4.2.2 Propellant Subsystem.

This subsystem consists of two fuel tanks (storage and sump), two oxidizer tanks (storage and sump), and propellant feed lines.

2.4.2.2.1 Propellant Tanks.

The propellant supply is contained in four hemispherical-domed cylindrical tanks within the service module (figures 2.4-1, 2.4-2, and 2.4-3). The storage tanks are pressurized by the helium supply. An outlet transfers the propellant and/or helium gas from the storage tanks through their respective transfer lines to the sump tanks. A standpipe in the sump tanks allows the propellant and/or helium gas from the storage tanks to pressurize the sump tanks. The propellants in the sump tanks are directed into retention reservoirs, to the outlet, and to the engine.

The umbrella retention reservoir, can, and screens are installed in the exit end of the sump tanks. The reservoir retains a quantity of propellants at the exit end of the sump tanks and the engine plumbing during 0-g condition. The reservoir permits engine ignition when the SPS propellant quantity remaining is greater than 22,300 pounds (56.4%) without an ullage maneuver. An ullage maneuver is also required prior to any SPS thrusting period following all docked LM DPS burns even if the SPS propellant quantity remaining is at or greater than 22,300 pounds (56.4%). When the SPS propellant quantity remaining is at 22,300 pounds (56.4%) or less, an ullage maneuver is performed prior to an SPS engine thrusting period to ensure that gas is not retained aft of the screens.

2.4.2.2.2 Tank Propellant Feed Lines.

The propellant feed lines have flexible bellows assemblies installed to permit alignment of the tank feed plumbing to the engine interface plumbing.

2.4.2.3 Bipropellant Valve Assembly.

The bipropellant valve assembly consists of two gaseous nitrogen (GN_2) pressure vessels, two injector prevalves, two GN_2 regulators, two GN_2 relief valves, four solenoid control valves, four actuators, and eight bipropellant ball valves.

2.4.2.3.1 Gaseous Nitrogen (GN_2) Pressure Vessels.

Two GN_2 tanks are mounted on the bipropellant valve assembly to supply pressure to the injector prevalves. One GN_2 tank is in the primary pneumatic control system A and the remaining GN_2 tank is in the secondary pneumatic control system B.

2.4.2.3.2 Injector Prevalves.

The injector prevalves are two-positive solenoid-operated valves, one for each pneumatic control system, and are identified as A and B. The valve is energized open and spring-loaded closed. The injector prevalves are controlled by the ΔV THRUST NORMAL switches on MDC-1. When switch A is placed to NORMAL, injector prevalve A is energized open. If switch B is placed to NORMAL, injector prevalve B is energized open. The injector prevalves, when energized open, allow GN_2 supply tank pressure to be directed through an orifice, into a regulator, relief valve, and to a pair of solenoid control valves. The solenoid control valves are controlled by the SPS thrust ON-OFF commands. The OFF position of the ΔV THRUST switches de-energizes the injector prevalves and springloads closed.

The ΔV THRUST NORMAL switch A receives power from SPS HE VALVE A circuit breaker on MDC-8 for control of the injector prevalve A. The ΔV THRUST NORMAL switch B receives power from SPS HE VALVE B circuit breaker on MDC-8 for control of the injector prevalve B (figures 2.4-1 and 2.4-2).

The ΔV THRUST NORMAL switches, A and/or B, also provide enabling power for the thrust ON-OFF logic circuitry.

2.4.2.3.3 GN_2 Filters (CSM 108 and Subs).

A filter is installed between each GN_2 pressure vessel and injector prevalve (figures 2.4-1 and 2.4-2). A filter is also installed on each GN_2 regulator outlet test port.

2.4.2.3.4 GN_2 Pressure Regulators.

A single-stage regulator is installed in each pneumatic control system between the injector prevalves and the solenoid control valves. The regulator reduces the supply GN_2 pressure to a desired working pressure.

2.4.2.3.5 GN_2 Relief Valves.

A pressure relief valve is installed in each pneumatic control system downstream of the GN_2 pressure regulators. This limits the pressure applied to the solenoid control valves in the event a GN_2 pressure regulator malfunctioned open.

2.4.2.3.6 GN_2 Orifices.

The orifice between the injector prevalve and regulator is installed to restrict the flow of GN_2 and allow the relief valve to relieve the pressure overboard in the event the regulator malfunctions open, preventing damage to the solenoid control valves and/or actuators.

2.4.2.3.7 GN_2 Solenoid Control Valves.

Four solenoid-operated three-way two-position control valves are utilized for actuator control. Two solenoid control valves are located downstream of the GN_2 regulators in each pneumatic control system. The solenoid control valves in the primary system are identified as 1 and 2 and the two in the secondary system are identified as 3 and 4. The solenoid control valves in the primary system control actuator and ball valves 1 and 2. The two solenoid control valves in the secondary system control actuator and ball valves 3 and 4. The SPS thrust ON-OFF command controls the energizing or de-energizing of the solenoid control valves. Solenoid control valves 1 and 2 are energized by the SPS thrust ON-OFF command if ΔV THRUST NORMAL switch A is placed to A. Solenoid control valves 3 and 4 are energized by the SPS thrust ON-OFF command if ΔV THRUST NORMAL switch B is placed to B.

2.4.2.3.8 GN_2 Ball Valve Actuators.

Four piston-type, pneumatically operated actuators are utilized to control the eight propellant ball valves. Each actuator piston is mechanically connected to a pair of propellant ball valves, one fuel and one oxidizer. When the solenoid control valves are opened, pneumatic pressure is applied to the opening side of the actuators. The spring pressure on the closing side is overcome and the actuator piston moves. Utilizing a rack and pinion gear, linear motion of the actuator connecting arm is converted into rotary motion, which opens the propellant ball valves. When the engine firing signal is removed from the solenoid control valves, the solenoid control valves close, removing the pneumatic pressure source from the opening side of the actuators. The actuator closing side spring pressure now forces the actuator piston to move in the opposite direction, causing the propellant ball valves to close. The piston movement forces the remaining GN_2, on the opening side of the actuator, back through the solenoid control valves where it is vented overboard.

Each actuator incorporates a pair of linear position transducers. One supplies ball valve position information to the SPS ENGINE INJECTOR VALVES indicators on MDC-3. The output of the second transducer supplies ball valve position information to telemetry.

2.4.2.3.9 Bipropellant Ball Valves.

The eight propellant ball valves are used to distribute fuel and oxidizer to the engine injector assembly. Each pair, of four linked pairs, consists of one fuel and one oxidizer ball valve that is controlled by a single actuator. The four linked pairs are arranged in a series-parallel configuration, figures 2.4-1 and 2.4-2. The parallel redundancy ensures engine ignition; the series redundancy ensures thrust termination. When GN_2 pressure is applied to the actuators, each propellant ball valve is rotated, aligning the ball to a position that allows propellants to flow to the engine injector assembly. The mechanical arrangement is such that the oxidizer ball valves maintain an 8-degree lead over the fuel ball valves upon opening, which results in smoother engine starting transients.

2.4.2.3.10 Bipropellant Valve Assembly Check Valves.

Check valves are installed in the vent port outlet of each of the four solenoid control valves, spring pressure vent port of the four actuators, and the ambient vent port of the two GN_2 pressure regulator assemblies. Thus, the seals of the components are protected from a hard vacuum in space.

2.4.2.3.11 Engine Propellant Lines.

Integral propellant lines are utilized on the engine to route each propellant from the interface points, in the gimbal plane area, to the bipropellant valve assembly. The plumbing consists of flexible bellows that permit propellant line flexibility for engine gimbaling, orifices for adjustment of oxidizer/fuel ratio, and screens to prevent particle contaminants from entering the engine.

2.4.2.4 Engine Injector.

The injector is bolted to the ablative thrust chamber attach pad. Propellant distribution through the injector is accomplished through concentric annuli machined orifices in the face of the injector assembly and covered by concentric closeout rings. Propellant distribution to the annuli is accomplished through alternate radial manifolds welded to the backside of the injector body. The injector is baffled to provide combustion stability. The fuel and oxidizer orifices impinge, atomize, and ignite because of hypergolic reaction.

2.4.2.5 Ablative Combustion Chamber.

The ablative combustion chamber material extends from the injector attach pad to the nozzle extension attach pad. The ablative material consists of a liner, a layer of insulation, and integral metal attach flanges for mounting the injector.

2.4.2.6 Nozzle Extension.

The bell-contoured nozzle extension is bolted to the ablative thrust chamber exit area. The nozzle extension is radiant-cooled and contains an external stiffener to provide additional strength.

2.4.2.7 SPS Electrical Heaters.

There are six electrical heaters installed on the tank feed lines from the respective sump tank outlets to the interface flange, on the respective engine feed lines from the interface flange to the bipropellant valve assembly and on the bottom side of the bipropellant valve assembly (figures 2.4-4 and 2.4-5). Each heater contains a redundant element. These electrical heaters provide heat to the tank feed lines, engine feed lines and bipropellant valve assembly, thus to the propellants. The heaters are controlled as a normal manual function of the crew on MDC-3 (figure 2.4-6) utilizing the SPS LINE HTRS switch. When the switch is placed to position A/B, power is supplied to 12 elements. When the switch is placed to position A, power is supplied to 6 elements. The switch is placed to position A/B or A when the SPS PRPLNT TANKS TEMP indicator on MDC-3 reads +45° F. Temperature is derived from the engine fuel line temperature sensor (figure 2.4-1). The switch is placed to OFF when the indicator reads +75°F. The red-line markings on the indicator are +27°F and +100°F, respectively.

The engine oxidizer feed-line temperature (figures 2.4-1 and 2.4-2) may be utilized as a back-up to the SPS PRPLNT TANKS TEMP indicator on MDC-3. The engine oxidizer feed-line temperature may be monitored on MDC-101 (figure 2.4-7).

2.4.2.8 Thrust Mount Assemblies.

The thrust mount assembly consists of a gimbal ring, engine-to-vehicle mounting pads, and gimbal ring-to-combustion chamber assembly support struts. The thrust structure is capable of providing ±10 degrees inclination about the Z-axis and ±6 degrees about the Y-axis.

2.4.2.8.1 Gimbal Actuator.

Thrust vector control of the service propulsion engine is achieved by dual, servo, electromechanical actuators. The gimbal actuators are capable of providing control around the Z-Z axis (yaw) of ±4.5 (+0.5, -0.0) degrees in either direction from a +1-degree null offset during SPS thrusting periods (0-degree null offset during non SPS thrusting periods), and around the Y-Y axis (pitch) of ±4.5 (+0.5, -0.0) degrees in either direction from a +2-degree null offset during SPS thrusting periods (+1.5-degree null offset during non SPS thrusting periods).

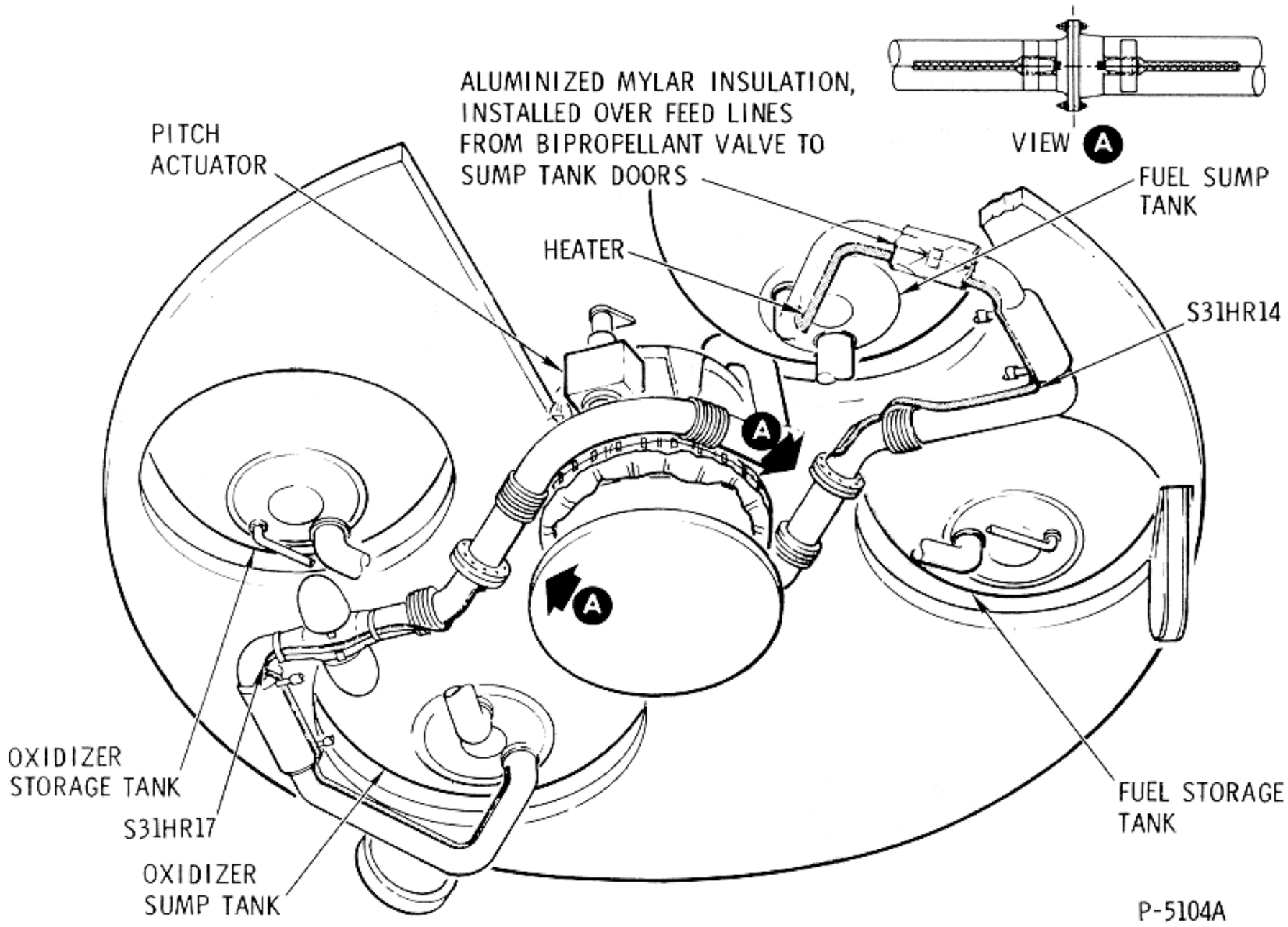

Figure 2.4-4. SPS Heater Installation, Tank Feed Lines

The reason for the +1-degree null offset to the +Y axis and +2-degree offset to the +Z axis during SPS thrusting periods, is the offset center of mass. The reason for the change in the null offset positions from an SPS non-thrusting period to an SPS thrusting period is due to the structural and engine deflections that occur when thrust-on is provided to the SPS engine.

Each actuator assembly (figure 2.4-8) consists of four electromagnetic particle clutches, two d-c motors, a bull gear, jack-screw and ram, ball nut, two linear position transducers, and two velocity generators. The actuator assembly is a sealed unit and encloses those portions protruding from the main housing.

One motor and a pair of clutches (extend and retract) are identified as system No. 1, the remaining motor and pair of clutches (extend and retract) are identified as system No. 2 within the specific actuator.

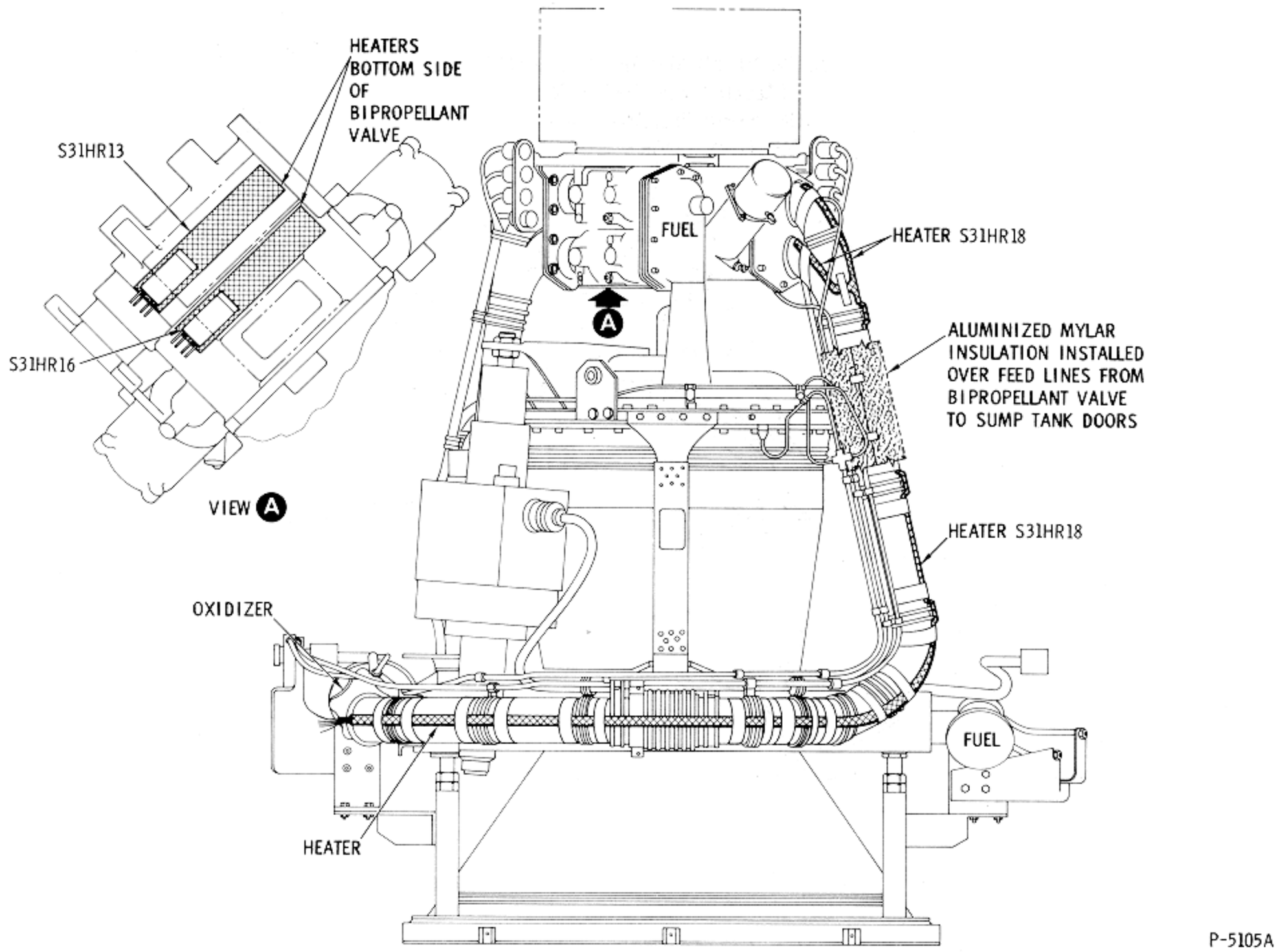

Figure 2.4-5. SPS Heater Installation, Engine Feed Lines

An overcurrent monitor circuit is employed for each primary and secondary gimbal motor. Each gimbal motor and overcurrent monitor circuit is controlled by its own SPS GIMBAL MOTORS switch on MDC-1. There are four SPS GIMBAL MOTORS switches, PITCH 1 and 2 and YAW 1 and 2. Figure 2.4-9 illustrates the yaw actuator as an example. When the SPS GIMBAL MOTORS YAW 1 (primary) switch is positioned to START, power is applied from the battery bus to the motor-driven switch. The motor-driven switch closes a contact that allows power from the main bus to the gimbal motors. Thus, the gimbal motor is started. When the SPS GIMBAL MOTORS YAW 1 switch is released, it springs back to the center position. The center position activates the overcurrent monitor sensing circuitry. The SPS GIMBAL MOTORS YAW 2 (secondary) switch is then positioned to START. The SPS GIMBAL MOTORS YAW 2 switch activates yaw 2 motor-driven switch. The motor-driven switch of YAW 2 functions as with YAW 1. The SPS GIMBAL MOTORS YAW 2 switch released from START, spring loads to center. The center position activates the overcurrent monitor circuit of yaw 2.

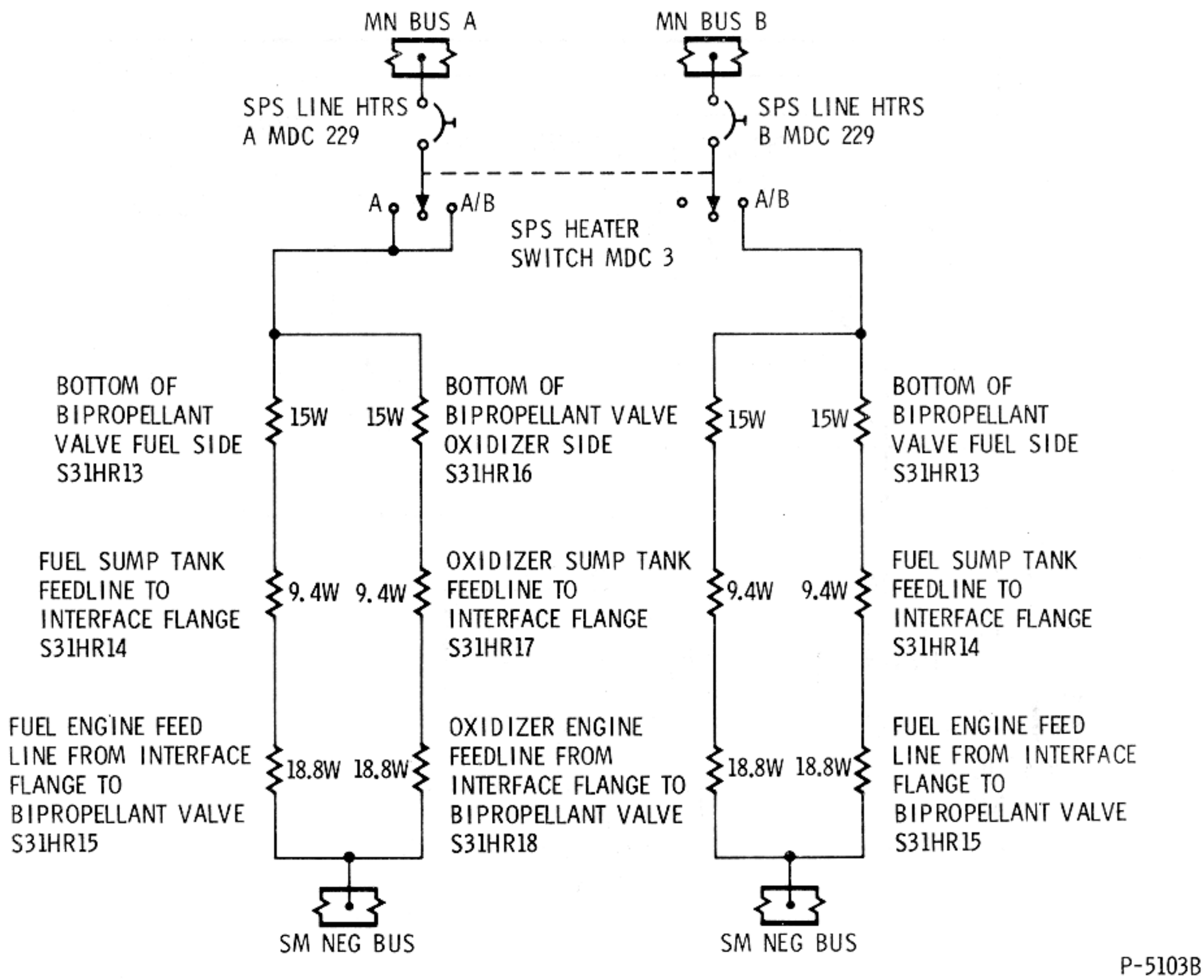

Figure 2.4-6. SPS Electrical Heaters

The overcurrent monitor circuits of the primary and secondary system are utilized to monitor the current to the gimbal motors. This is because of the variable current flow during the initial gimbal motor start, normal operation for the main d-c bus, and gimbal motor protection.

Using the No. 1 yaw system as an example, identify the upper motor and clutches in figures 2.4-8 and 2.4-9 as system No. 1. When the overcurrent monitoring senses an overcurrent on gimbal motor No. 1, the following functions occur. The overcurrent monitor circuitry drives the motor-driven switch. This removes power from gimbal motor No. 1, rendering it inoperative. Simultaneously, a signal is sent to illuminate

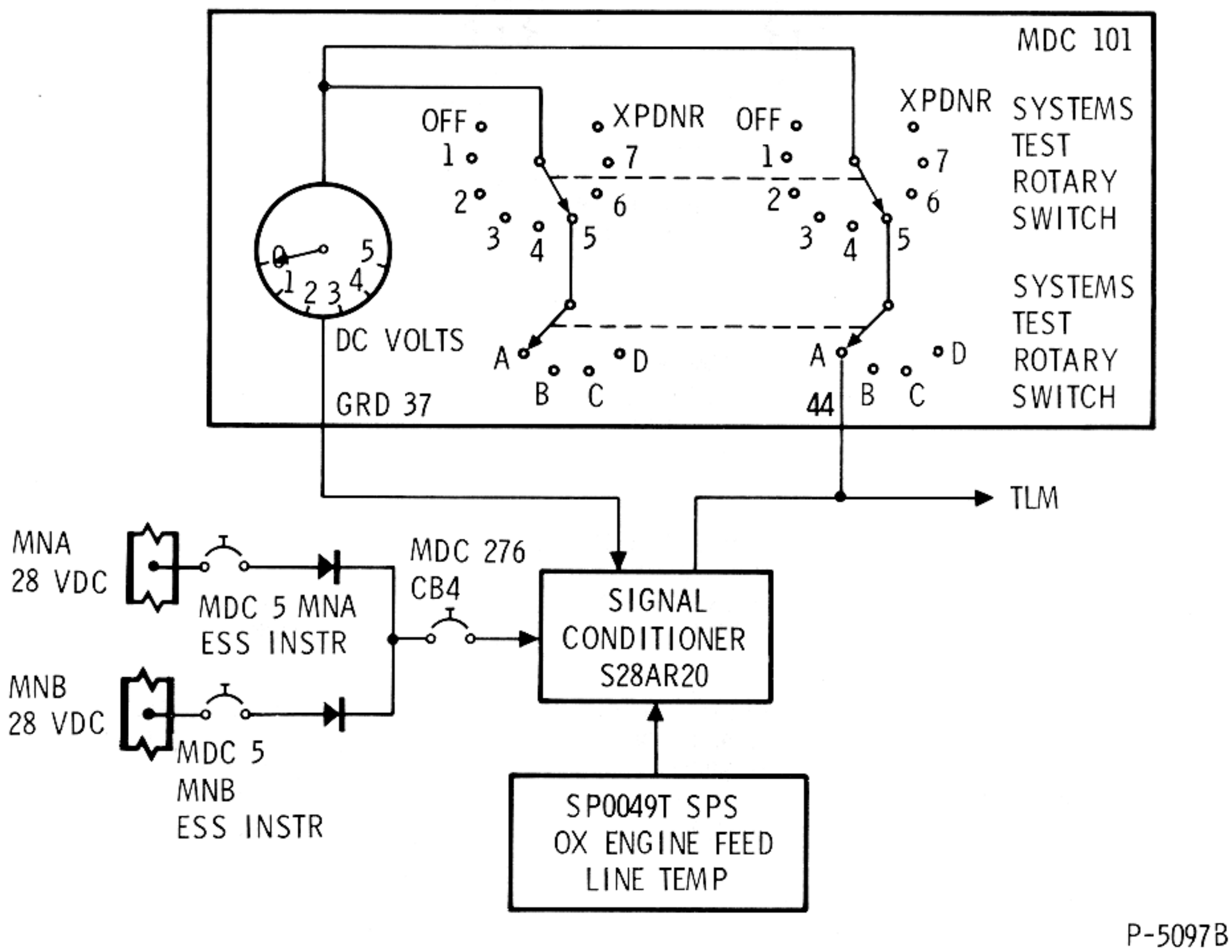

Figure 2.4-7. SPS Oxidizer Engine Feed-Line Temperature Monitoring

the YAW GMBL DR 1 caution and warning light on MDC-2. This informs the crew the YAW gimbal motor No. 1 has failed due to overcurrent. Simultaneously, a fail sense signal is sent from a contact on the motor-driven switch. The fail sense signal is sent through an OR and AND gate to a solid-state switch. This switch provides a ground for relay coils A4K4, A4K5, A4K6 and A4K8. These relays are energized if the TVC GMBL DRIVE YAW switch on MDC-1 is in AUTO and the SCS TVC SERVO POWER switch 2 on MDC-7 is in AC2/MNB or AC1/MNA. This allows the upper relay contacts of A4K4 and A4K8 to open and removes the power input to the No. 1 clutches.

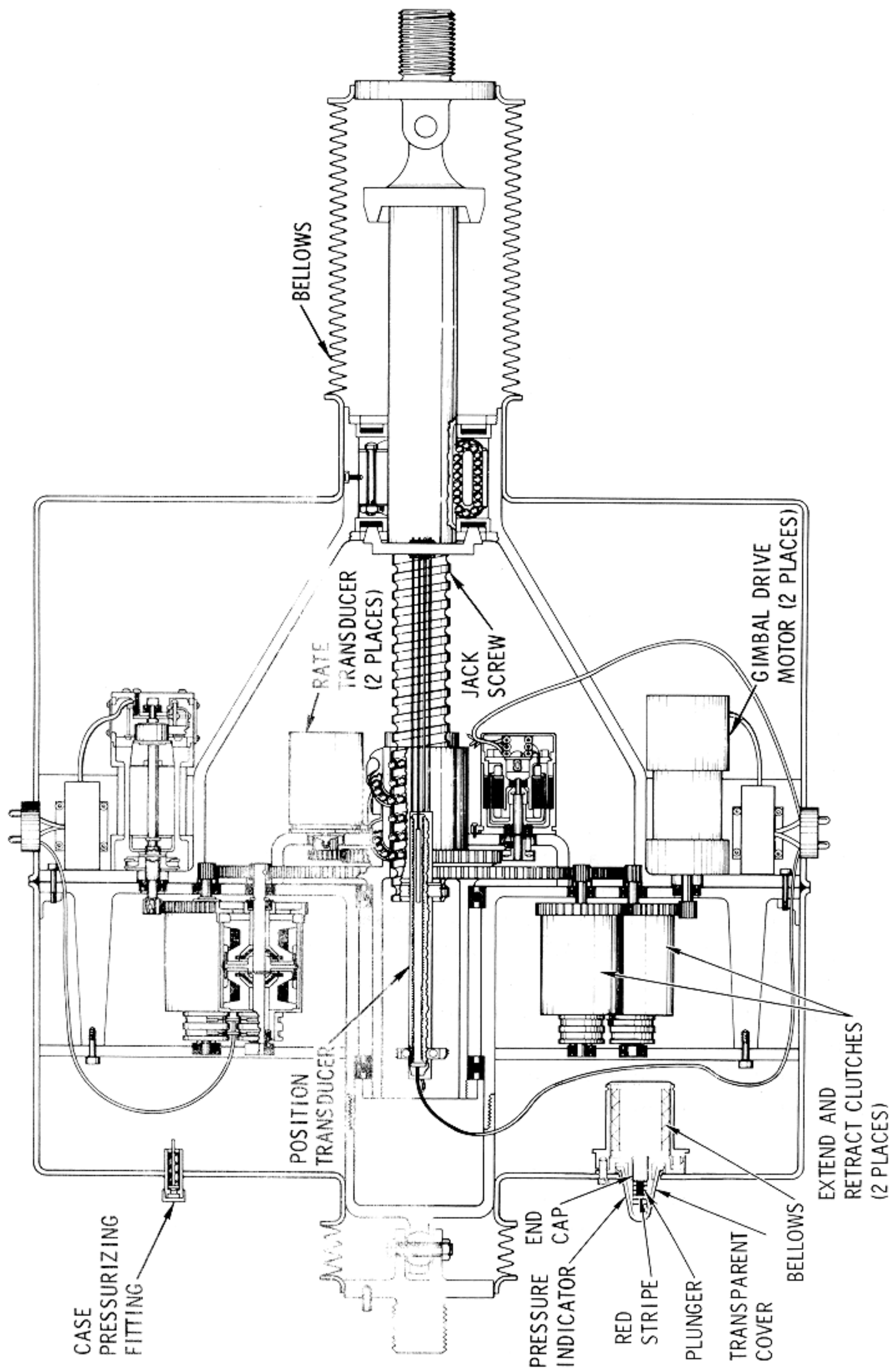

P-5017A

Figure 2.4-8. SPS Electromechanical Gimbal Actuator

Simultaneously, the lower relay contacts of A4K5 and A4K8 close. This applies power inputs to the No. 2 clutches within the same actuator. Simultaneously, the upper contacts of A4K4, A4K5, and A4K6 open and the lower contacts close, allowing thrust vector control monitoring. The SPS GIMBAL MOTORS YAW 1 switch on MDC-1 is then positioned to OFF. Normally, the OFF position is used to shut down the gimbal motor upon completion of a thrusting period.

Using No. 2 yaw system as an example, identify the lower motor and clutches in figure 2.4-8 and 2.4-9 as system No. 2. When the overcurrent monitoring senses an overcurrent on gimbal motor No. 2, the following functions occur. The overcurrent monitor circuitry will drive the motor-driven switch. This removes power from gimbal motor No. 2, rendering it inoperative. Simultaneously, a signal is sent to illuminate the YAW GMBL DR 2 caution and warning light on MDC-2. This informs the crew the YAW gimbal motor No. 2 has failed due to overcurrent. There is no fail sense signal sent to control relay coils A4K4, A4K5, A4K6, and A4K8. If the No. 2 gimbal motor has failed as well as No. 1 gimbal motor, that specific actuator is inoperative. The SPS GIMBAL MOTORS YAW 2 switch on MDC-1 is then positioned to OFF. Normally, the OFF position is used to shut down the gimbal motor upon completion of a thrusting period.

The LV/SPS IND switch on MDC-1 when positioned to GPI de-energizes relay coils A11K3, A11K4, A11K5, and A11K6 (figure 2.4-9). This allows the relay contact points of A11K3, A11K4, A11K5, and A11K6 to move to the down position. The actuator position transducer is then allowed to transmit gimbal position information to the SPS GPI on MDC-1.

The TVC GMBL DRIVE YAW switch on MDC-1 will also control through the OR and AND gate the solid-state switch (figure 2.4-9). The solid-state switch will provide the ground for relay coils A4K4, A4K5, A4K6, and A4K8. The power input to these relays is provided by positioning the TVC SERVO POWER switch 2 on MDC-7 to AC2/MNB or AC1/MNA. When the TVC GMBL DRIVE YAW switch is in AUTO, the primary gimbal motor overcurrent monitor circuitry controls the solid-state-switch. If overcurrent on the primary gimbal motor is sensed, the CMC, SCS or MTVC inputs are switched automatically from the primary to the secondary clutches.

If the TVC GMBL DRIVE YAW switch on MDC-1 is in position 1, the CMC, SCS, or MTVC inputs are locked into the primary clutches. If overcurrent is sensed on gimbal motor No. 1, or if the translation control is rotated clockwise, there is no automatic switchover from the primary to secondary clutches. The TVC GMBL DRIVE YAW switch positioned to 1 could be utilized to check out gimbal motor No. 1, the primary clutches, and the primary servo loop system.

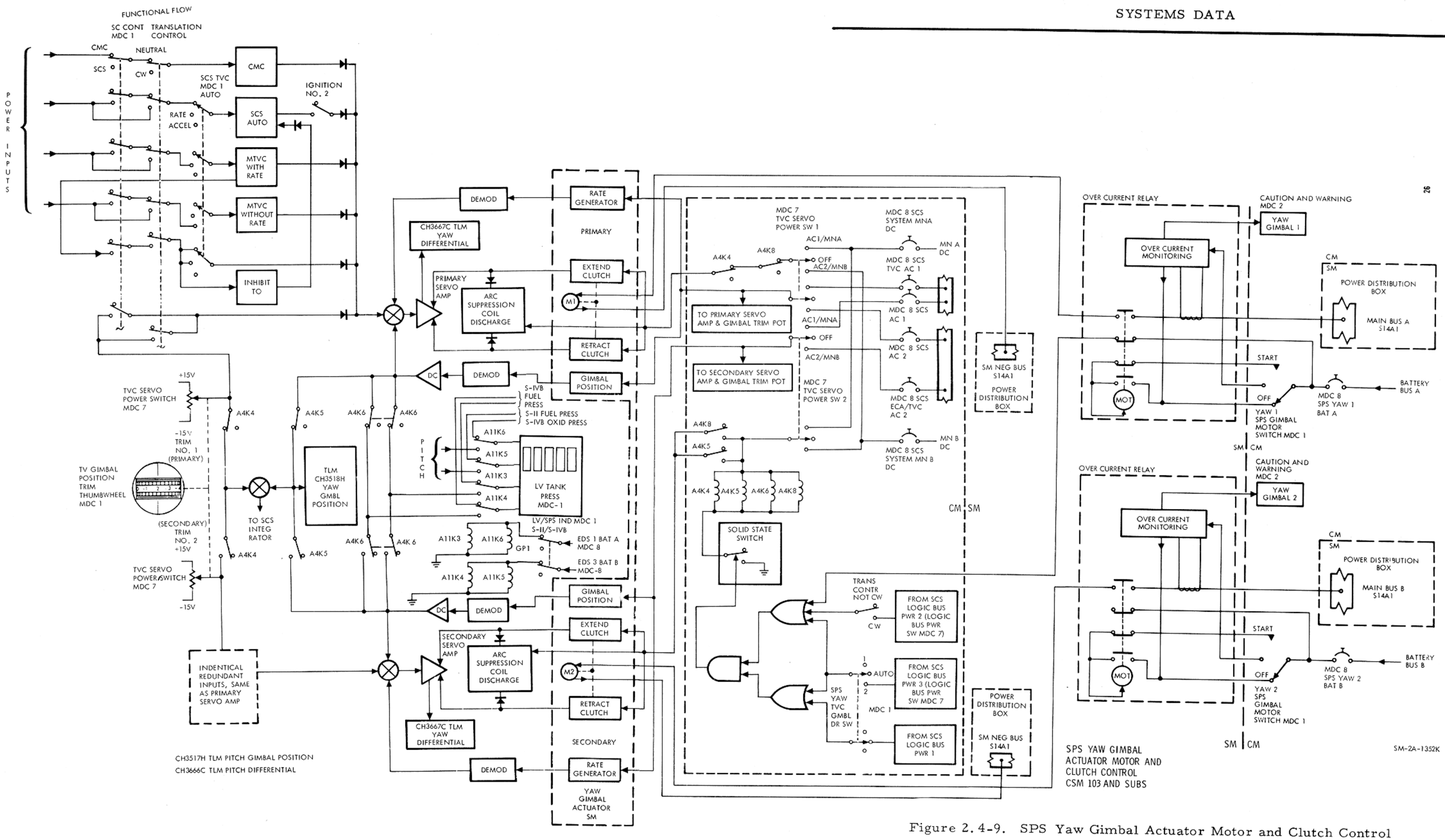

Figure 2.4-9. SPS Yaw Gimbal Actuator Motor and Clutch Control

If the TVC GMBL DRIVE YAW switch on MDC-1 is in position 2 and the TVC SERVO POWER switch 2 on MDC-7 is in AC2/MNB or AC1/MNA position. The CMC, SCS or MTVC inputs are locked into the secondary clutches. This position could be utilized to check out gimbal motor No. 2, the secondary clutches, and the secondary servo loop system.

If the TVC GMBL DRIVE YAW switch on MDC-1 is in AUTO and TVC SERVO POWER switch 2 on MDC-7 is in AC2/MNB or AC1/MNA position. The SCS or MTVC inputs are removed from the primary clutches and switched to the secondary clutches when the translation control is rotated clockwise.

The pitch gimbal actuator operation and control function in the same manner as yaw. The pitch gimbal actuator control circuits has its own PITCH GIMBAL MOTOR switches on MDC-1 and its own TVC GMBL DR PITCH switch on MDC-1. The TVC SERVO POWER switches on MDC-7 will supply power to the pitch clutches as in the case of the yaw clutches. The LV/SPS IND switch to GPI on MDC-1 allows pitch gimbal position to the GPI. The relay coils, however, will have different numbers in the pitch actuator.

It is noted that the primary yaw and pitch gimbal motor receive power from MN BUS A. The primary pitch and yaw motor-driven switches receive power from BAT BUS A. The secondary yaw and pitch gimbal motors receive power from MN BUS B. The secondary pitch and yaw motor-driven switches receive power from BAT BUS A.

The clutches are of a magnetic-particle type. The gimbal motor drive gear meshes with the gear on the clutch housing. The gears on each clutch housing mesh and as a result, the clutch housings counter rotate. The current input is applied to the electromagnet mounted to the rotating clutch housing from the SCS, CMC, or MTVC. A quiescent current may be applied to the electromagnet of the extend and retract clutches when the TVC SERVO POWER switches, on MDC-7, are in AC1/MNA or AC2/MNB, preventing any movement of the engine during the boost phase of the mission with the gimbal motors OFF. The gimbal motors will be turned ON prior to jettisoning the launch escape tower to support the SPS abort after the launch escape tower has been jettisoned and will be turned OFF as soon as possible to reduce the heat that occurs due to the gimbal motor driving the clutch housing with quiescent current applied to the clutch. The friction force in the clutch housing creates heat which if allowed to increase to a high temperature, the electromagnet would loose its magnetism capability, thus rendering that set of clutches inoperative.

Prior to any SCS ΔV thrusting period or in MTVC (manual thrust vector control), the thumbwheels on MDC-1 will be used to position the engine. The thumbwheels may be positioned prior to any CMC ΔV thrusting period but cannot position the engine. In any thrusting mode, the current input required for a gimbal angle change (to maintain the engine thrust vector through the center of mass) to the clutches will increase above the quiescent current. This increases the current into the electromagnets that are rotating with the clutch housings. The dry powder magnetic particles have the ability to become magnetized very readily, as well as demagnetized just as readily. The magnetic particles increase the friction force between the rotating housing and the flywheel, causing the flywheel to rotate. The flywheel arrangement is attached to the clutch output shaft allowing the clutch output shaft to drive the bull gear. The bull gear drives a ball nut which drives the actuator jackshaft to an extend or retract position, depending upon which clutch housing electromagnet the current input is supplied to. The larger the excitation current, the higher the clutch shaft rotation rate.

Meshed with the ball nut pinion gear are two rate transducers. The transducers are a tachometer type. When the ball nut is rotated, the rate transducer supplies a feedback into the summing network of the thrust vector control logic to control the driving rates of the jackscrew (acting as a dynamic brake to prevent over- or under-correcting). There is one rate transducer for each system.

The jackscrew contains two position transducers, all arranged for linear motion and all connected to a single yoke. The position transducers are used to provide a feedback to the summing network and the visual display on MDC-1. The operating system provides feedback into the summing network reducing the output current to the clutch resulting in proportional rate change to the desired gimbal angle position and returns to a quiescent current in addition to providing a signal to the visual display on MDC-1.

The remaining position transducer provides a feedback to the redundant summing network of the thrust vector logic for the redundant clutches in addition to the visual display on MDC-1 if the secondary system is the operating system.

The spacecraft desired motion, thumbwheel positioning, rotation control (MTVC), engine nozzle position, thrust vector position, gimbal position display indicator, and actuator ram movement is identified in figures 2.4-10 and 2.4-11.

A snubbing device provides a hard stop for an additional one-degree travel beyond the normal gimbal limits.

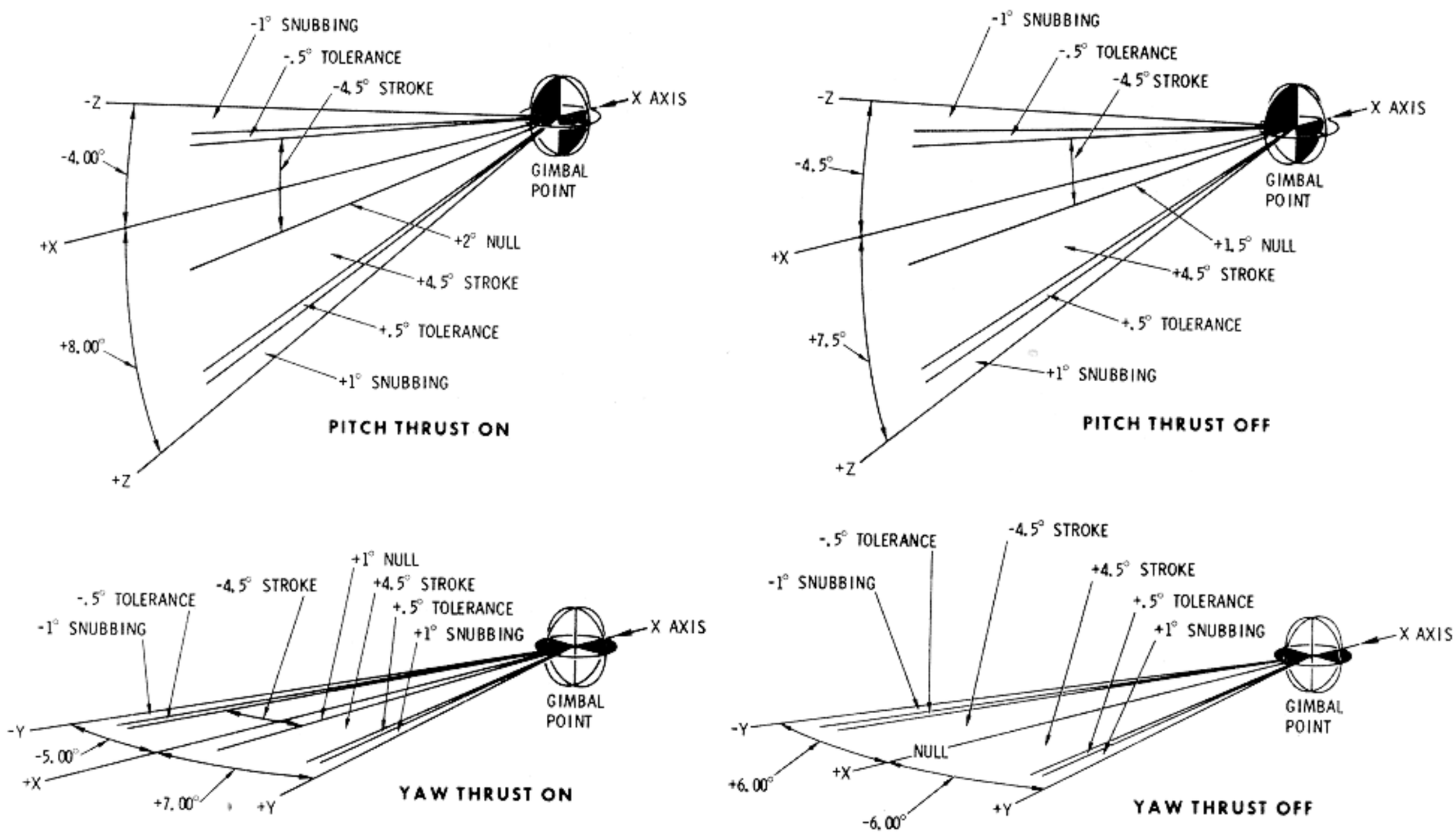

THE ENGINE MOUNTING PADS IN THE SERVICE MODULE ARE CANTED 4° (THRUST VECTOR) TO THE +Y AXIS OF THE SPACECRAFT. HOWEVER THE ACTUATOR NULL ADJUSTMENTS ARE AS FOLLOWS:

PITCH

THE PITCH ACTUATOR NULL POSITION IS +2° THRUST VECTOR TO THE +Z, ENGINE NOZZLE -2° TO THE -Z DURING AN SPS ENGINE FIRING. THE NULL POSITION IS +1.5° THRUST VECTOR TO THE +Z, ENGINE NOZZLE -1.5° TO THE -Z DURING SPS NON-THRUSTING PERIODS. THE THUMB WHEEL ON MDC 1 & GIMBAL POSITION INDICATOR/FUEL PRESSURE INDICATOR ON MDC 1 WILL BE 0.0°.

YAW

THE YAW ACTUATOR NULL POSITION IS +1° THRUST VECTOR TO THE +Y, ENGINE NOZZLE IS -1° TO THE -Y DURING AN SPS ENGINE FIRING. THE NULL POSITION IS 0° THRUST VECTOR TO THE Y, ENGINE NOZZLE IS 0° TO THE Y AXIS DURING SPS NON-THRUSTING PERIODS. THE THUMB WHEEL ON MDC 1 & GIMBAL POSITION INDICATOR/FUEL PRESSURE INDICATOR ON MDC 1 WILL BE 0.0°

THE REASON FOR THE DIFFERENCE BETWEEN A NON SPS ENGINE FIRING VERSUS AN SPS ENGINE FIRING IS DUE TO DEFLECTIONS OF ENGINE AND VEHICLE STRUCTURE.

P-5073F

Figure 2.4-10. SPS Angles Pitch and Yaw

2.4.2.9 Propellant Utilization and Gauging Subsystem (PUGS).

The subsystem consists of a primary and auxiliary sensing system, a propellant utilization valve, a control unit, and a display unit (figures 2.4-12 and 2.4-13).

2.4.2.9.1 Quantity Sensing, Computing, and Indicating System.

Propellant quantity is measured by two separate sensing systems, primary and auxiliary. The primary quantity sensors are cylindrical capacitance probes, mounted axially in each tank. In the oxidizer tanks,

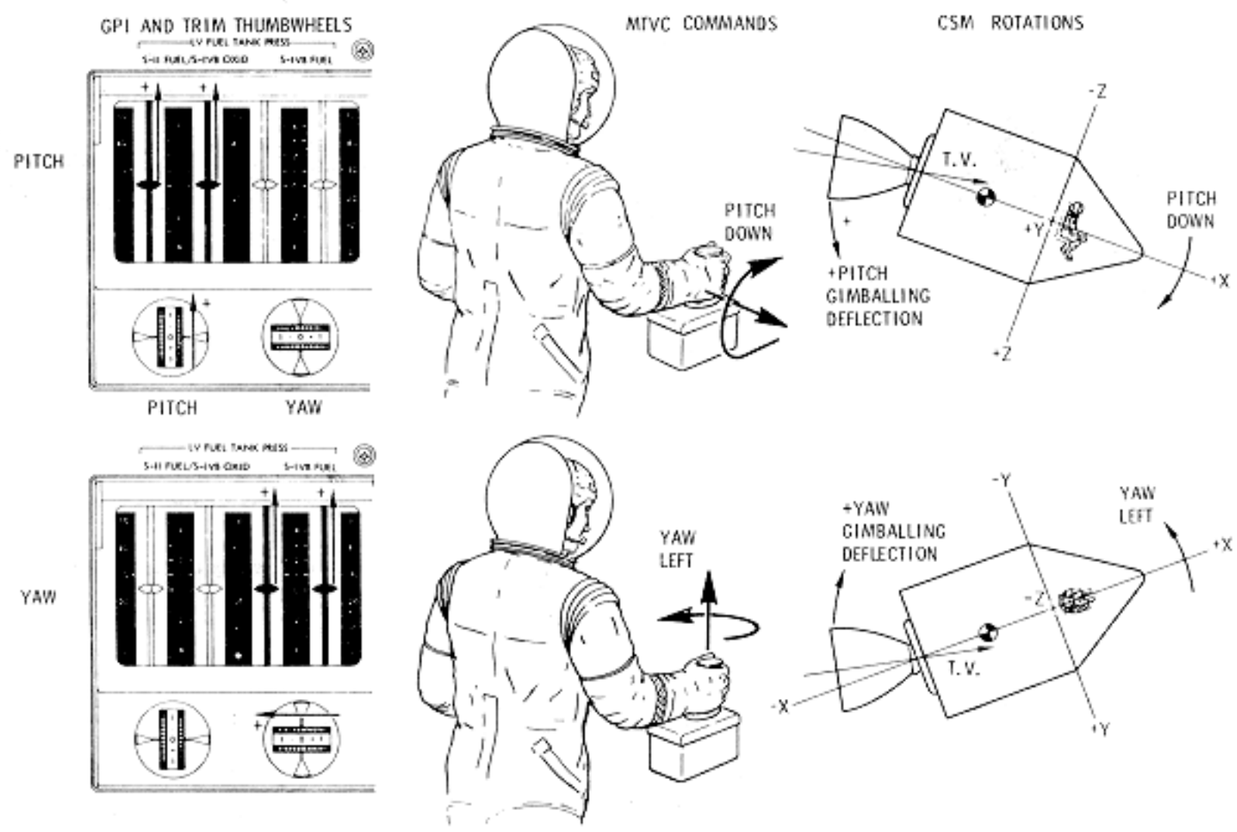

SPACE CRAFT AXIS	SPACE CRAFT NOSE MOTION	THUMB WHEEL TRAVEL	TRIM VOLTAGE	GPI INDICATION	MTVC COMMAND ROTATION CONTROL	ENGINE ANGLE COMMAND	ACTUATOR RAM TRAVEL	ENGINE INJECTOR TRAVEL THRUST VECTOR	ENGINE SKIRT TRAVEL
PITCH	↓ (DOWN)	↓ +NUMERAL	+	+	-PITCH (FORWARD)	+	EXTEND	-Z	+Z
	↑ (UP)	↑ -NUMERAL	-	-	+PITCH (AFT)	-	RETRACT	+Z	-Z
YAW	← (LEFT)	↓ +NUMERAL	+	+	-Y (CCW)	+	EXTEND	+Y	-Y
	→ (RIGHT)	↑ -NUMERAL	-	-	+Y (CW)	-	RETRACT	-Y	+Y

P-5111

Figure 2.4-11. SPS Gimbaling

the probes consist of a pair of concentric electrodes with oxidizer used as the dielectric. In the fuel tanks, a pyrex glass probe, coated with silver on the inside, is used as one conductor of the capacitor. Fuel on the outside of the probe is the other conductor. The pyrex glass itself forms the dielectric. The auxiliary system utilizes point sensors mounted at intervals along the primary probes to provide a step function impedance change when the liquid level passes their location centerline.

Primary propellant measurement is accomplished by the probes capacitance, being a linear function of propellant height.

Auxiliary propellant measurement is accomplished by locating the propellant level with point sensors, seven in the storage tanks and eight in the sump tanks. Each point sensor consists of concentric metal rings. The rings present a variable impedance depending on whether they are covered or uncovered by the propellants. When the propellants are between point sensors, the propellants remaining are integrated by a rate flow generator which integrates the servos at a rate proportional to the nominal flow rate of the fuel and oxidizer. A mode selector senses when

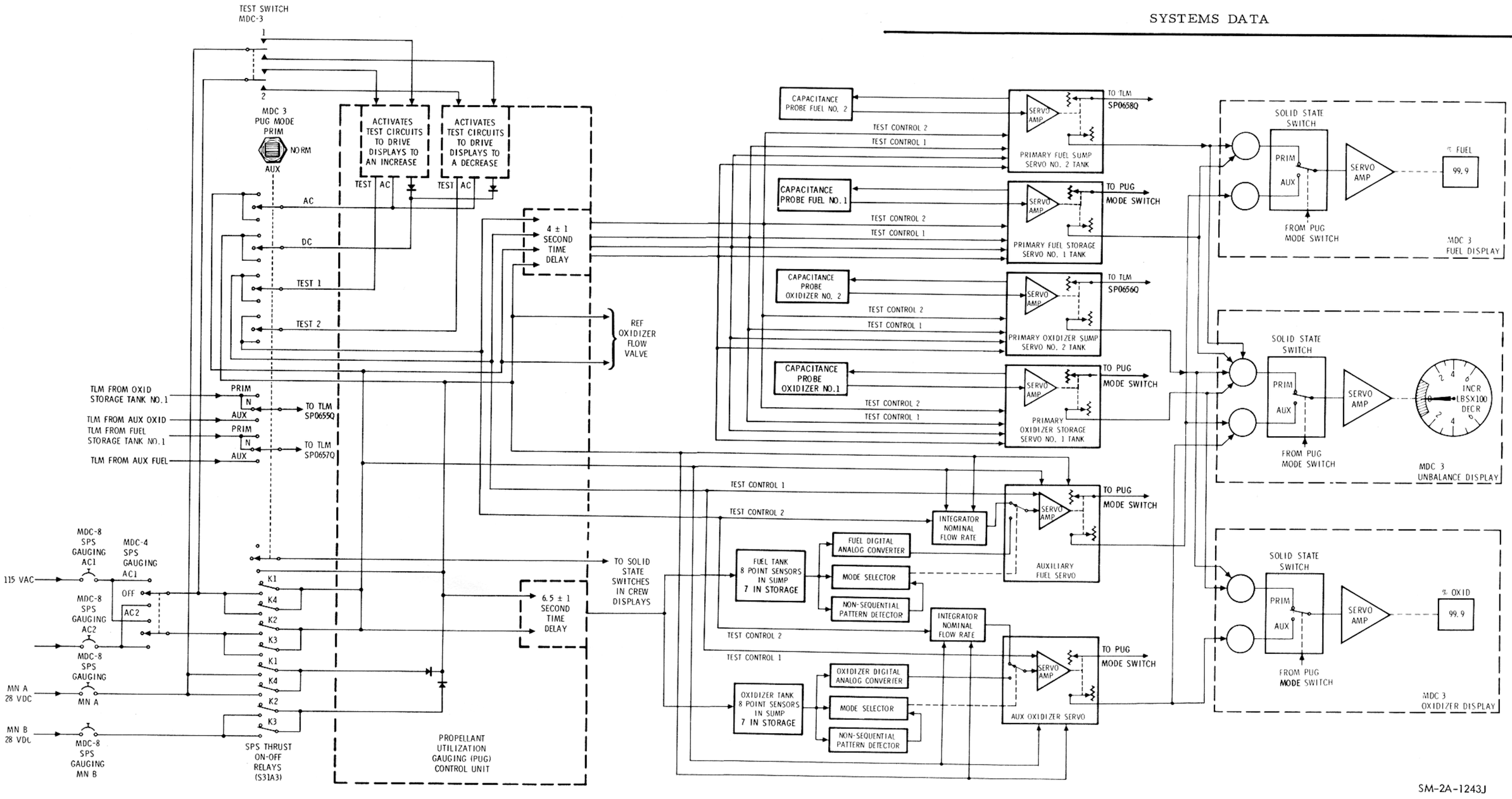

Figure 2.4-12. SPS Quantity, Sensing, Computing and Indicating System

SPS

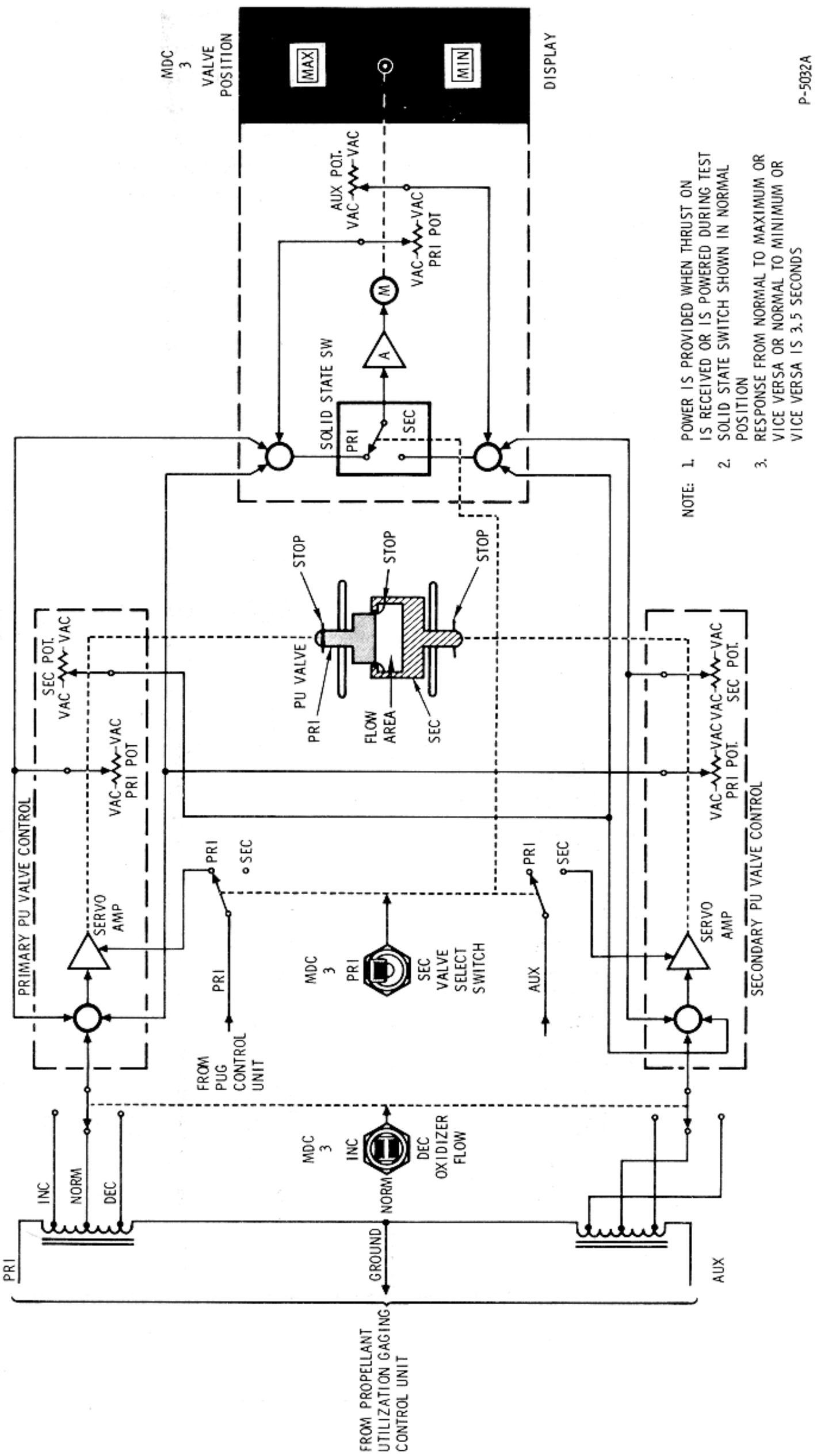

2.4-13. Propellant Utilization Valve and Flag Display

SPS

the propellant crosses a sensor and changes the auxiliary servos from the flow rate generator mode to the position mode, the system moves to the location specified by the digital-to-analog converter for 0.9 seconds to correct for any difference. The system then returns to the flow rate generator mode until the next point sensor is reached. Figures 2.4-14 and 2.4-15 identify the point sensor locations. The non-sequential pattern detector functions to detect false or faulty sensor signals. If a sensor has failed, the information from that sensor is blocked from the system, preventing disruption of system computation.

When a THRUST-ON signal is provided with the PUG MODE switch in the PRIMARY or NORMAL position, the crew display digital readouts and unbalance display will not change for 4±1 seconds to allow for propellant settling. However, TLM will receive the same signal as upon completion of the last firing after approximately one second of SPS THRUST-ON.

OXIDIZER POINT SENSOR LOCATIONS				
NUMBER	WEIGHT POUNDS	PERCENT MAXIMUM		INCHES
	TEMP 70°F	70°F		
	PRESS. 176.60 PSIA	176.60 PSIA		
15	1,586.01	6.5	OXIDIZER SUMP TANK NO. 2	25.36
14	3,172.02	13.0		41.34
13	4,758.03	19.5		57.25
12	6,344.04	26.0		72.07
11	7,930.05	32.5		86.89
10	9,516.06	39.0		101.72
9	11,102.07	45.5		116.54
8	12,688.08	52.0		131.60
7	14,274.09	57.8	OXIDIZER STORAGE TANK NO. 1	10.50
6	15,860.10	64.3		30.57
5	17,446.11	70.8		49.55
4	19,032.13	77.3		68.54
3	20,618.14	83.8		87.52
2	22,204.15	90.3		106.51
1	23,790.16	96.8		125.49

P-5093E

Figure 2.4-14. SPS Oxidizer Point Sensor Location

FUEL POINT SENSOR LOCATIONS				
NUMBER		WEIGHT POUNDS	PERCENT MAXIMUM	INCHES
	TEMP	70°F	70°F	
	PRESS.	176.60 PSIA	176.60 PSIA	
15		992.08	6.5	25.36
14		1984.16	13.0	41.34
13		2976.24	19.5	57.25
12		3968.32	26.0	72.07
11		4960.40	32.5	86.89
10		5952.48	39.0	101.72
9		6944.56	45.5	116.54
8		7936.64	52.0	131.60
7		8928.72	57.8	10.48
6		9920.80	64.3	30.55
5		10912.88	70.8	49.54
4		11904.96	77.3	68.52
3		12897.04	83.8	87.51
2		13889.12	90.3	106.49
1		14881.20	96.8	125.48

FUEL SUMP TANK NO. 2

FUEL STORAGE TANK NO. 1

P-5094F

Figure 2.4-15. SPS Fuel Point Sensor Location

When the THRUST-ON signal is provided with the PUG MODE switch in AUXILIARY position, the crew display digital readouts, unbalance display, and TLM will receive a change in information immediately, which is generated from a flow rate integrator that simulates the nominal flow rate and transmits this as quantity information to the crew displays and TLM. The crew digital readouts unbalance display and TLM will not be updated to the propellant from a point sensor for 6.5±1.0 seconds after THRUST-ON. When the THRUST-ON signal is provided plus 6.5±1.0 seconds, if a point sensor is uncovered, the crew digital readouts, unbalance display, and TLM will be updated to the propellant remaining at that point sensor. The time delay of 6.5±1.0 seconds is to the point sensor system and not to the auxiliary fuel and oxidizer servos, and is to allow for propellant settling.

Any deviation from the nominal oxidizer to fuel ratio (1.6:1 by mass) is displayed by the UNBALANCE indicator in pounds. The upper half of the indicator is marked INC and the lower half is marked DEC to identify the required change in oxidizer flow rate to correct any unbalance condition. The marked or shaded area is a normal unbalance range area.

The crew can determine if a true unbalance of propellant remaining exists. With the PUG mode switch in PRIM or NORM, the crew display percentage readouts would not indicate the same percentage value and the unbalance meter would indicate the amount of unbalance in pounds. To verify if a true unbalance condition exists, the PUG mode switch would be positioned to AUX. If the crew display percentage readouts and the

Figure 2.4-16. Deleted

unbalance meter now read similar to the readouts when in PRIM, a true unbalance condition exists.

The crew can determine in the case of a malfunction as to what has malfunctioned within the quantity and indicating systems by utilization of the TEST switch. To test the PRIM gauging system, the PUG mode switch must be in PRIM, and to test the AUX gauging system, the PUG mode switch must be in AUX.

By observing the response of each system in conjunction with the test switch on MDC-3, the crew can recognize the malfunction or determine if there is a true unbalance existing.

The crew display readouts and unbalance meter should not be considered accurate until the SPS engine is thrusting for at least 25 seconds. This is to allow complete propellant settling in the SPS tanks before the gauging system is within its design accuracy.

When the THRUST-OFF signal is provided, regardless of the PUG MODE switch position, the visual display fuel and oxidizer percentage readouts and the unbalance meter display will lock at the readings displayed. TLM will not receive any propellant quantity information during THRUST-OFF conditions.

2.4.2.9.2 Quantity Computing and Indicating System Test.

A test of the sensing systems, excluding the point sensor and probes, can be implemented during THRUST-ON or OFF periods. With the PUG MODE switch in PRIM and the TEST switch in TEST 1 (up) position, the test stimuli is applied to the primary system tank servoamplifiers (4) after a time delay of 4±1 seconds. At this time, the test stimuli will drive the crew display fuel and oxidizer readouts to an increase reading at different rates. This results in an unbalance and is so indicated on the unbalance meter crew display as an INC (clockwise rotation). TLM would receive an increase in propellant quantity from the primary system tank servoamplifiers TLM potentiometers. When the TEST switch is released from TEST 1 (up) position, the TEST switch spring loads to the center position. This removes the test stimuli, and the crew displays will lock at the readings that they had been driven to. TLM would not receive any propellant quantity information.

With the PUG MODE switch in PRIM and positioning the TEST switch to the TEST 2 (down) position. The test stimuli is applied to the primary system tank servoamplifiers (4) after a time delay of 4±1 seconds. At this time, the test stimuli drives the crew display fuel and

oxidizer readouts to a decrease reading at different rates. This returns the crew displays close to the reading displayed prior to TEST 1 (up). Simultaneously TLM would receive the same information. The crew displays would lock at the new readings if the TEST switch is released to center (spring loaded). TLM would not receive any propellant quantity information at this time. If the TEST switch is positioned again to TEST 2 (down), followed by a time delay of 4±1 seconds, the fuel and oxidizer crew display readouts would drive to a decrease reading at different rates. This results in an unbalance condition and is so indicated on the unbalance meter display as a DEC (counterclockwise rotation). TLM would receive a decrease in propellant quantity at this time. Releasing the TEST switch to the center position removes the test stimuli and locks the displays at the new reading. TLM would not receive any propellant quantity information at this time. To return to the reading displayed prior to the second TEST 2 (down) the TEST switch is positioned to TEST 1 (up). After a time delay of 4±1 seconds, the crew displays would drive to an increase reading at different rates. This returns the crew displays close to the reading displayed prior to the second TEST 2 (down). At this time, TLM receives the same information.

To TEST the auxiliary system, the PUG MODE switch is positioned to AUX and the TEST switch set to TEST 1 (up) and TEST 2 (down) positions. There are no time delays involved with the auxiliary system.

With the PUG MODE switch in AUX, and positioning the TEST switch in the TEST 1 (up) position, the test stimuli is provided to the auxiliary fuel and oxidizer servoamplifiers (2). This drives the fuel and oxidizer displays to an increase reading at approximately the same rates. This results in no or a very small unbalance and is so indicated on the unbalance meter. At this time TLM would receive an increase in propellant quantity from the auxiliary system TLM potentiometers. Releasing the TEST switch to center, removes the test stimuli. The crew displays lock at whatever readings they had been driven to. TLM would not receive any information of propellant quantity at this time.

With the PUG MODE switch in AUX and positioning the TEST switch in the TEST 2 (down) position, the test stimuli is provided to the auxiliary fuel and oxidizer integrators. This drives the fuel and oxidizer displays to a decrease reading at the same rates. This returns the crew displays close to the readings displayed prior to TEST 1 (up). The result is no or very little unbalance and is so indicated on the unbalance meter crew display. At this time TLM would receive the same information. Releasing the TEST switch to center, the test stimuli is removed. This locks the crew displays, and TLM would not receive any propellant

quantity information. If the TEST switch is positioned again to TEST 2 (down), the fuel and oxidizer crew displays would drive to a decrease reading at the same rates resulting in no or very little unbalance. TLM would receive a decrease in propellant quantity at the time. Releasing the TEST switch to center will lock the displays to the readings that they had been driven to. TLM would not receive any propellant quantity information at this time. To return to the reading displayed prior to the second TEST 2 (down), the TEST switch is positioned to TEST 1 (up). The crew displays would drive to an increase reading at approximately the same rates. This returns the crew displays close to the reading displayed prior to the second TEST 2 (down). TLM would receive the same information at this time. Releasing the TEST switch to center will lock the displays at the readings they had been driven to. TLM would receive no information at this time.

2.4.2.9.3 Propellant Utilization Valve.

If an unbalance condition exists, which is determined from the INCR, DECR readings on the unbalance meter on MDC-3, the crew may use the propellant utilization valve to return the remaining propellants to a balanced condition. The propellant utilization is not powered until a THRUST-ON command is provided to the propellant utilization gauging control unit (figures 2.4-12 and 2.4-13). The propellant utilization valve housing contains two sliding gate valves within one housing. One of the sliding gate valves is the primary, and the remaining valve is the secondary. Stops are provided within the valve housing for the full increase or decrease positions. There are separate stops for the primary and secondary sliding gate valves. The secondary propellant utilization valve has twice the travel of the primary propellant utilization valve. This is to compensate for the primary propellant utilization valve failure in any position.

The propellant utilization valve controls are located on MDC-3. The OXID FLOW PRIM, SEC switch, selects the primary or secondary propellant utilization valve for operation. The normal position of the OXID FLOW VALVE select switch is PRIM. The OXID FLOW VALVE select switch will not be moved to SEC unless a problem is encountered with the primary valve. The OXID FLOW VALVE INCR, NORM, DECR switch is utilized to position the selected primary or secondary propellant utilization valve. When the OXID FLOW VALVE switch is in NORM and the OXID FLOW VALVE select switch is in PRIM, the sliding gate valves are in a nominal flow position. The upper and lower OXID FLOW VALVE position indicators are gray. When the unbalance meter informs the crew of INCR, the OXID FLOW VALVE switch is positioned to INCR and the OXID FLOW VALVE select switch is in

PRIM. The primary sliding gate valve then moves to the increase flow position. The valve movement will take approximately 3.5 seconds to reach the full increase position. The upper OXID FLOW VALVE position indicator would then indicate MAX and the lower indicator would remain gray. The OXID FLOW VALVE would then be left in the INCR oxidizer flow position. This will increase the oxidizer flow approximately 3 percent above the nominal oxidizer flow. When the unbalance meter informs the crew of approximately 0 unbalance, the OXID FLOW VALVE switch is then positioned to NORM. The primary sliding gate valve would then return to the nominal flow position. The valve movement will take approximately 3.5 seconds to reach the nominal flow position. The OXID FLOW VALVE upper indicator would then return to gray. The lower indicator would remain gray.

When the unbalance meter informs the crew to DECR the oxidizer flow, the OXID FLOW VALVE switch is then positioned to DECR with the OXID FLOW VALVE select switch in PRIM. The primary sliding gate valve then moves to the decrease flow position. The valve movement will take approximately 3.5 seconds to reach the decrease flow position. This will decrease the oxidizer flow approximately 3-1/2 percent below that of the nominal oxidizer flow. When the primary gate valve reaches the DECR position, the upper OXID FLOW VALVE position indicator remains gray and the lower indicator would indicate MIN. The OXID FLOW VALVE would then be left in the DECR position. When the unbalance meter informs the crew of approximately 0 unbalance, the OXID FLOW VALVE switch is then positioned to NORM. The primary sliding gate valve would then return to the nominal flow position. The valve movement will take approximately 3.5 seconds to reach the nominal flow position. The OXID FLOW VALVE upper indicator would then return to gray. The lower indicator would remain gray.

The secondary propellant utilization valve is selected by positioning the OXID FLOW VALVE select switch from PRIM to SEC. The SEC position would be selected in the event of a problem with the PRIM. The secondary sliding gate valve would then be controlled and operated by the OXID FLOW VALVE INCR, NORM, DECR switch in the same manner as the primary valve. The position indicators would then operate in the same manner as in the primary, however, now indicating secondary valve position.

The primary and/or secondary sliding gate valves cannot be positioned to block or close off the oxidizer flow completely. This is because the mechanical stops within the sliding gate valves.

2.4.2.10 Engine Thrust ON-OFF Control.

Figures 2.4-1 and 2.4-2 illustrate the THRUST ON-OFF logic in the command module computer (CMC), the stabilization control subsystem (SCS) and the manual SPS THRUST DIRECT ON ΔV mode.

The SCS circuit breakers on MDC-8 supply power to selected switches on MDC-7 and MDC-1. The MDC-7 switches distribute a-c and d-c power to the SCS hardware and d-c logic power to selected switches on MDC-1. The G&N (Guidance and Navigation) IMU (Inertial Measurement Unit) circuit breakers on MDC-5 supply power to the G/N power switch on MDC-100. When the G/N power switch is positioned to IMU, power is supplied to the SC CONT switch on MDC-1. When the SC CONT switch is positioned to CMC, a discrete event signal is supplied to the translation control. With the translation control not clockwise (neutral), this allows the discrete event enable to the CMC.

The SPS PILOT VALVE circuit breakers MNA and MNB on MDC-8 supply power to the respective ΔV THRUST NORMAL A and B switches on MDC-1. The ΔV THRUST NORMAL A and B switches on MDC-1 supply arming power to the SPS relays and solenoid control valves. These switches also provide power to the FCSM SPS A and B switches on MDC-1 (for CSM 106 through CSM 111, figure 2.4-1). The FCSM SPS A and B switches are positioned and locked to the RESET/OVERRIDE position (for CSM 106 through CSM 111, figure 2.4-2). The FCSM SPS A and B switches provide enabling power to the THRUST ON-OFF logic (for CSM 106 through CSM 111, figure 2.4-1). The FCSM switch nomenclatures are covered with a blank decal on CSM 106 through CSM 111. The FCSM switches are removed on CSM 112 and subs (figure 2.4-2).

The SPS engine THRUST-ON command is provided by the THRUST ON-OFF logic in the CMC or SCS ΔV modes. The THRUST ON-OFF logic commands the SPS DRIVERS 1 and/or 2. The SPS DRIVERS provide a ground in THRUST ON to the low side of the SPS solenoids and relays. The SPS DRIVERS provide the removal of the ground in THRUST-OFF conditions to the SPS solenoids and relays. DRIVER 1 provides a ground for the SPS solenoids No. 1 and No. 2 and SPS relays S31A3K1 and S31A3K3. DRIVER 2 provides a ground for SPS solenoids No. 3 and No. 4 and SPS relays S31A3K2 and S31A3K4. The SPS relays when energized provide power to the SPS quantity gauging system and SPS He VLV 1 and 2. The SPS He VLV switches on MDC-3 must be in AUTO and the SPS gauging switch on MDC-4 in AC1 or AC2. The solenoid control valves when energized allow GN_2 pressure to be supplied to the respective bipropellant valve (ball valve) actuators. The

respective ball valves when opened, allow propellants to flow into the injector and atomize and ignite (hypergolic).

The SPS THRUST DIRECT ON switch on MDC-1 provides an alternate backup mode to the CMC and/or SCS ΔV modes. When the SPS THRUST DIRECT ON switch is positioned to SPS THRUST DIRECT ON, a ground is provided to the low side of the SPS relays and solenoid control valves. The engine is commanded ON (providing the ΔV THRUST NORMAL switches are in A and/or B) regardless of the SPS THRUST ON-OFF logic.

The SPS DRIVERS No. 1 and/or No. 2 will remove the ground on the low side of the SPS relays and solenoid control valves, when commanded by the THRUST-OFF logic in the CMC or SCS ΔV modes. The THRUST-OFF command allows the SPS relays and solenoid control valves to de-energize. This allows the solenoid control valves to dump overboard the GN_2 pressure within the actuator. The actuator spring pressure drives the ball valves closed, thus shutting the engine down.

In the SPS THRUST DIRECT ON mode, the ground on the low side of the SPS relays and solenoid control valves is removed by positioning the SPS THRUST DIRECT ON switch to NORMAL. This allows the solenoid control valves and relays to de-energize and shut the engine down in the same manner as the SPS DRIVERS.

The ΔV THRUST NORMAL A switch positioned to A enables the (A bank) logic circuitry, arms the (A bank) SPS relays and solenoid control valves and energizes injector prevalve A. The injector prevalve then allows GN_2 pressure to solenoid control valves No. 1 and No. 2. The ΔV THRUST NORMAL B switch positioned to B enables the (B bank) logic circuitry, arms the (B bank) SPS relays and solenoid control valves and energizes injector prevalve B. The injector prevalve then allows GN_2 pressure to solenoid control valves No. 3 and No. 4.

The CMC commands THRUST-ON in the CMC ΔV mode by supplying a logic 0 to the THRUST ON-OFF logic. This is providing that the SC CONT switch is in the CMC position and translation control not clockwise (neutral). The SPS DRIVERS then provide the ground to the SPS relays and solenoid control valves. The ΔV THRUST NORMAL A switch is positioned to A for single-bank operation. If double-bank operation is desired, 5 seconds or later after SPS THRUST-ON, the ΔV THRUST NORMAL switch B is positioned to B. When the CMC changes the logic signal from a 0 to a 1, THRUST-OFF is commanded. The ΔV THRUST NORMAL switch A and/or B are then positioned to OFF.

The SCS ΔV mode is obtained by positioning the SC CONT switch to SCS. A thrust enable signal is obtained from the EMS/ΔV display counter if at or above 00000.0. THRUST ON is commanded by a +X translation and by depressing the THRUST-ON pushbutton (MDC-1). The +X command signal is necessary to enable the THRUST-ON logic. The +X command function may be obtained by depressing the DIRECT ULLAGE pushbutton on MDC-1, or positioning the translation control to +X, or positioning the translation control counterclockwise (SPS abort mode). The difference between the commands is that the DIRECT ULLAGE or SPS ABORT commands initiate an SMRCS engine direct coil firing and inhibits the SMRCS engine auto (coil) pitch and yaw solenoid drivers, IGNITION 1 (IGN-1). The translation control positioned to +X utilizes the SM RCS engine auto coils; thus, attitude hold may be obtained. The SM RCS engine auto coils (pitch and yaw) are then inhibited automatically 1 second after SPS engine THRUST ON by the IGN-1 command. When the ground to the SPS solenoids and relays are provided by the SPS DRIVER or DRIVERS, the THRUST ON pushbutton may be released and the +X command terminated. The SPS engine firing is maintained by the SCS lock-in circuit. The ΔV THRUST NORMAL A switch is positioned to A for single-bank operation. If double-bank operation is desired, 5 seconds or later after SPS THRUST ON, the ΔV THRUST NORMAL B switch is positioned to B. The +X command function and the THRUST ON pushbutton depressed must be initiated again to supply THRUST-ON to the B bank and B SCS logic. When the EMS/ΔV counter reads -.1, the EMS/ΔV counter enable signal is removed and THRUST-OFF is commanded. The ΔV THRUST NORMAL A and/or B switch are then positioned to OFF.

The SPS THRUST ON-OFF logic may be switched from the CMC to the SCS ΔV mode during an SPS engine thrusting period. The translation control may be rotated to the clockwise position or the SC CONT switch to SCS. In either case the THRUST ON-OFF logic is transferred to the SCS ΔV mode. The SPS engine would continue thrusting (providing the EMS/ΔV counter is at or above 00000.0) by the presence of the SCS lock-in circuit. THRUST OFF will be commanded as in the normal SCS ΔV mode.

If the manual SPS THRUST DIRECT ON mode is desired, the ΔV THRUST NORMAL A switch is positioned to A (for single-bank operation) and the SPS THRUST DIRECT switch is positioned to SPS THRUST DIRECT ON. The SPS THRUST DIRECT ON switch positioned to SPS THRUST DIRECT ON provides a ground to the SPS relays and solenoid control valves. If double-bank of operation is desired, 5 seconds (or later) after SPS thrust ON, the ΔV THRUST NORMAL B switch is positioned to B. To terminate thrust in the SPS THRUST

DIRECT ON mode, the SPS THRUST DIRECT ON switch is positioned to NORMAL. Under certain conditions the SPS THRUST DIRECT ON switch positioned to NORMAL will not shut the engine down. The conditions are: with the SCS LOGIC BUS PWR switch on MDC-7 positioned to 2/3, and with the SC CONT switch in MDC-1 in SCS or SC CONT switch in CMC and translation control clockwise and ΔV counter above 0. In the aforementioned condition the SCS ΔV mode has inadvertently paralleled the SPS THRUST DIRECT ON mode. With the SPS THRUST DIRECT ON switch in NORMAL, the EMS/ΔV counter reaching -.1 would provide THRUST OFF as in the normal SCS ΔV mode. If the SPS THRUST DIRECT ON switch was positioned to NORMAL when the EMS/ΔV counter was below -.1, the SPS THRUST DIRECT ON switch to NORMAL would shut the engine down.

A manual back-up THRUST OFF command for the CMC, SCS or SPS THRUST DIRECT ON mode is obtained by the ΔV THRUST NORMAL A and B switches. If single-bank operation was used, positioning the applicable ΔV THRUST NORMAL switch to OFF would shut the engine down. If double-bank operation was used, positioning ΔV THRUST NORMAL switches A and B to OFF would shut the engine down. Positioning the ΔV THRUST NORMAL switches A and B to OFF removes the arming power from the SPS relays and solenoid control valves.

The SPS THRUST-ON-OFF logic circuitry also provides several output functions. A ground is provided for the illumination of the THRUST-ON lamp on the EMS display. The ground is sensed by SPS ignition logic. It is noted on figures 2.4-1 and 2.4-2 that as long as the EMS MN A and/or MN B circuit breakers on MDC-8 are closed, with the ΔV THRUST NORMAL switches A and B on MDC-1 in the OFF position and the FCSM SPS A and B switches on MDC-1 positioned and locked in the RESET/OVERRIDE position on CSM 106 through CSM 111 (figure 2.4-1), the SPS THRUST ON light on the EMS MDC-1 will not be illuminated. The FCSM SPS A and B switches are removed on CSM 112 and subs (figure 2.4-2). The SPS THRUST ON light on the EMS will illuminate when a ground is provided through the logic circuit driver No. 1 and/or No. 2, or when the SPS THRUST DIRECT ON switch on MDC-1 is positioned to SPS THRUST DIRECT ON.

The SM RCS auto pitch and yaw RCS disabling signal IGN-1 is not present until one second after SPS ignition in the SCS ΔV mode, and is not removed until one second after SPS THRUST-OFF in the SCS ΔV mode. IGN-2 logic signal is required for the SCS-TVC and MTVC logic. The IGN-2 logic signal is generated at the same time the SPS solenoids are grounded when in the SCS ΔV mode, but is not removed until one second after ground is removed to maintain SC control during SPS thrust-off decay.

The SPS ROUGH ECO caution and warning light on MDC-2 for CSM 106 through CSM 111 is covered with a blank decal. The flight combustion stability monitor system is rendered inoperative on CSM 106 through CSM 111 by stowing the power input wires to the FCSM, figure 2.4-1. The FCSM SPS A and SPS B switch nomenclatures are covered by a blank decal on CSM 106 through CSM 111. The FCSM SPS A and SPS B switches are positioned and guarded to the RESET/OVERRIDE position on CSM 106 through CSM 111 (figure 2.4-1). The SPS ROUGH ECO caution and warning light, the FCSM SPS A and SPS B switches, the SPS READY signal to the CMC and the FCSM components are physically removed on CSM 112 and subs (figure 2.4-2).

2.4.3 PERFORMANCE AND DESIGN DATA.

2.4.3.1 Design Data.

The following list contains specific data on the components in the SPS:

Helium Tanks (2)	3600±50-psia nominal fill pressure, 4400-maximum operating pressure. Capacity 19.4 cubic ft each, inside diameter 40 in., and a wall thickness of 0.46 in. Weight 393 lbs. each.
Regulator Units (2)	Working regulator, primary 186±4 psig, secondary 191±4 psig. Primary lockup 195 psig. Secondary lockup 200 psig. Inlet filter 10 microns nominal, 25 microns absolute. Normally locked-up (closed) regulators, primary 181±4 psig, secondary 191±4 psig. Primary lockup 195 psig. Secondary lockup 205 psig.
Check Valves - Filters	Inlet port 40-micron nominal, 74-micron absolute. Test ports 50-micron nominal and 74-micron absolute. One at inlet to check valve assembly; one at each test port.
Pressure Transducers (2)	Fuel and oxidizer underpressure setting (SPS PRESS light, MDC-2), 157 psia. Fuel and oxidizer overpressure setting (SPS PRESS light MDC-2), 200 psia.
Propellant Utilization Valve Control (2)	Increase position, approximately 3% more than nominal flow. Normal position, nominal flow. Decrease position, approximately 3.5% less than the nominal flow. Response time, normal to increase or vice versa, or normal to decrease or vice versa, is 3.5 seconds.

Quantity Sensing System Accuracy	Indicators - Difference between actual quantity and total indicated quantity for each propellant shall not exceed ±0.35% of full tank plus +0.35% of propellant remaining separately to total fuel and oxidizer separately. TLM - Difference between actual quantity in each tank and that represented to TLM be within ±0.35% of full tank plus +0.35% of propellant remaining.
Helium Relief Valve (2)	Diaphragm rupture, 219±6 psig. Filter, 10 microns nominal, 25 microns absolute. Relief valve relieves at 212 minimum to 225 psig maximum, reseats at 208 psig minimum. Flow capacity 3 lbs/minute maximum at 60° F and 225 psig. Bleed device closes when increasing pressure reaches no greater than 150 psig in cavity, and reopens when decreasing pressure has reached no less than 20 psig.
Oxidizer Storage Tank #1	Total tank capacity 11284.69 lbs. Fill pressure 110 psia. Height 154.47 in. Inside diameter 45 in., wall thickness 0.054 in. 128.52 cubic feet
Oxidizer Sump Tank #2	Total tank capacity 13923.72 lbs = 57.0%. Fill pressure 110 psia. Height 153.8 in., diameter 51 in., wall thickness 0.054 in. 161.48 cubic feet
Fuel Storage Tank #1	Total tank capacity 7058.36 lbs. Fill pressure 110 psia. Height 154.47 in., diameter 45 in., wall thickness 0.054 in. 128.52 cubic feet
Fuel Sump Tank #2	Total tank capacity 8708.10 lbs. = 57.0%. Fill pressure 110 psia. Height 153.8 in., diameter 51 in., wall thickness 0.054 in. 161.48 cubic feet
Total Propellant (In Tanks)	Total oxidizer 25208.41 lbs = 103.4%. Total fuel 15766.46 lbs = 103.4%. 99.9% oxidizer gaugeable 24389.10 lbs. 99.9% fuel gaugeable 15252.70 lbs.

All Propellant Tanks	Pressurized to 10±5 psig of helium when empty to prevent collapsing of tanks (negative pressure of 0.5 psig will collapse tanks).
Interface Flange Filter (2)	500 microns absolute.
GN_2 Bipropellant Valve Control Systems (2)	GN_2 storage vessel pressure 2500±50 psi at 68°F, 2900 psi at 130°F. Support 43 valve actuations. 120-cubic inch capacity, each. Inside diameter 4.65 in., length 9.6 in. Regulator - single stage, dynamic 187 psig minimum. Lockup pressure 195 to 225 psig. Relief valve relieves at 350±15 psi, reseats, at not less than 250 psi. *GN_2 filters, one between each GN_2 supply tank and injector prevalve, 5 microns nominal and 18 microns absolute. One at each GN_2 regulator outlet test port, 5 microns nominal and 18 microns absolute.
Engine (1)	750-second service life. Support 36 restarts minimum. Expansion ratio = 6 to 1 at ablative chamber exit area = 62.5 to 1 at nozzle extension exit area. Chamber cooling, ablation and film cooled. Nozzle extension, radiation cooled. Injector type, baffled, unlike impingement. Oxidizer lead 8 degrees Length 159.944 in. maximum Nozzle extension exit diameter 98.4 in. inside diameter Weight approximately 650 lbs. Injector flange temperature, illuminates SPS FLANGE TEMP HI caution and warning light on MDC-2 at 480°F. (Light disconnected and covered with decal on CSM 108 and subs.) SPS Pc transducer, Pc displayed on MDC-1 through SPS Pc α switch to SPS Pc α indicator on MDC-1. Green range on indicator is 65 to 125% (psia). Normal 95 to 105% (psia).

*CSM 108 and subs.

Heaters (6)	6 heaters, 2 elements on each heater, 3 elements in series on the fuel side rated at 15 watts, 9.4 watts, and 18.8 watts; 3 elements in series on the oxidizer side rated at 15 watts, 9.4 watts, and 18.8 watts. SPS heater switch position A/B on MDC-3 supplies 28 vdc to 12 elements. SPS heater switch position A on MDC-3 supplies 28 vdc to 6 elements.
Gimbal Actuators	Structural mounting pad offset 4 deg to +Y. About Z-Z axis ±4.5 (+0.5, -0.0) deg with additional 1 deg for snubbing (yaw), null 1 deg to +Y (thrust vector) during SPS thrusting periods, 0 degree during non SPS thrusting periods. About Y-Y axis ±4.5 (+0.5, -0.0) deg with additional 1 deg for snubbing (pitch), null 2 deg to +Z (thrust vector) during SPS thrusting periods, +1.5 to +Z during non SPS thrusting periods.
Overcurrent Relays (4)	Overcurrent dependent upon temperature during start transient and steady state. Quiescent current of 60 milliamps ±10 percent. Pressurized to 3 to 5 psi of dry air. Deflection rate 0.12 radians per second (low side, 6.87° per second) to 0.132 radians per second (high side, 7.56° per second).

2.4.3.2 Performance Data.

Refer to CSM/LM Spacecraft Operational Data Book SNA-8-D-027 CSM (SD 68-447).

2.4.3.3 SPS Electrical Power Distribution.

See figures 2.4-17 and 2.4-18 for electrical power distribution.

2.4.4 OPERATIONAL LIMITATIONS AND RESTRICTIONS.

a. Propellant quantity gauging subsystem is operational only during engine thrusting periods. A 4±1-second SPS thrusting period is required before the primary capacitance system provides updated information to telemetry and crew displays with the PUG MODE switch in PRIM or NORM. In addition, with the PUG mode switch in PRIM, NORM, or AUX position, the crew display readouts and unbalance meter should not be considered accurate until the SPS engine is thrusting for at least 25 seconds. The delays plus the previous statement are to allow the propellant to settle and stabilize within the SPS tanks before the gauging system is within its accuracy.

b. Pitch and yaw gimbal actuator limitations:

1. Allow one-half second between actuation of the GMBL MOTOR switches on MDC-1 to minimize power transients.

2. The secondary gimbal motors should be in operation in the pitch and yaw gimbal actuator for any SPS engine firing for back-up modes of operation.

3. The TVC SERVO PWR switch 1 on MDC-7 should not be positioned to AC1/MNA and TVC SERVO PWR switch 2 on MDC-7 positioned to AC2/MNB or switch 1 to AC2/MNB and switch 2 to AC1/MNA in excess of one hour prior to an SPS engine firing. This would result in some preheating of the pitch and yaw gimbal actuator clutches which could result in a degradation of actuator clutch performance.

4. Do not operate the pitch and yaw gimbal actuator motors without applying power to the thrust vector control servo amplifiers as the pitch and yaw gimbal actuators have a natural tendency to extend or retrace (depending on altitude and pressure) and may drive the SPS engine from snub to snub resulting in vehicle motion.

5. The pitch and yaw gimbal actuator operating time should be held to a minimum. The pitch and yaw gimbal actuator clutches with gimbal motors operating are capable of holding the SPS engine at a given position during the boost phase of the mission (820 seconds) followed by a 100-second SPS engine abort firing without degradation. If no SPS abort firing is required the gimbal motors are shut down at earth orbit acquisition. The gimbal motors are placed into operation 1 minute prior to S-IVB translunar injection with clutches holding the SPS engine at a given position, followed by a 5-1/2-minute S-IVB firing (translunar injection), followed with CSM separation from the S-IVB, followed by a 614-second SPS engine firing, and followed by a 1-minute idle post fire before gimbal motors are turned off and the clutches not degraded.

c. Engine design minimum impulse control limit is 0.4 second; however, mission minimum impulse may be longer.

d. For other operational limitations and restrictions, refer to Volume 2 of the AOH SPS malfunction procedures.

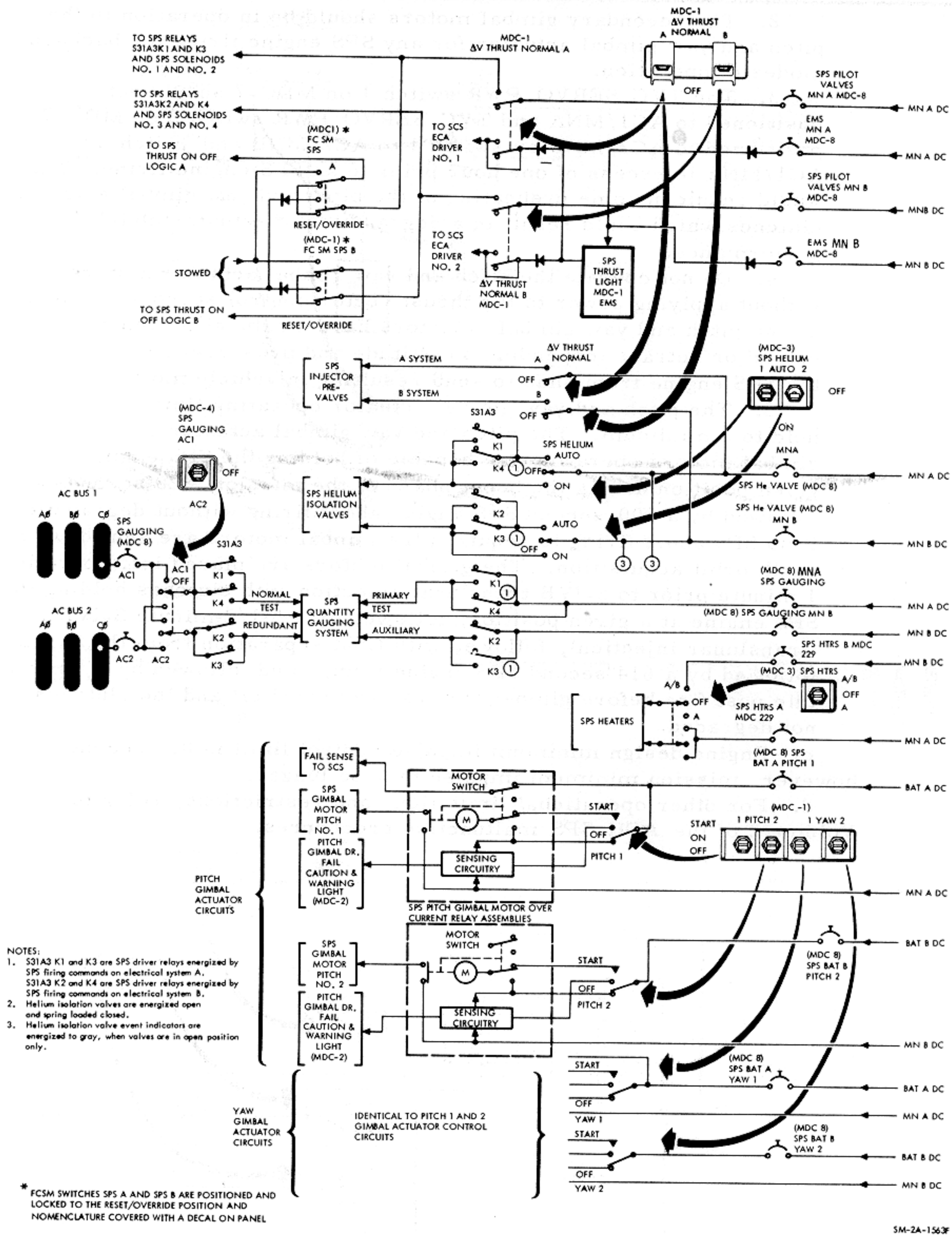

Figure 2.4-17. Electrical Power Distribution
(CSM 106 Through CSM 111)

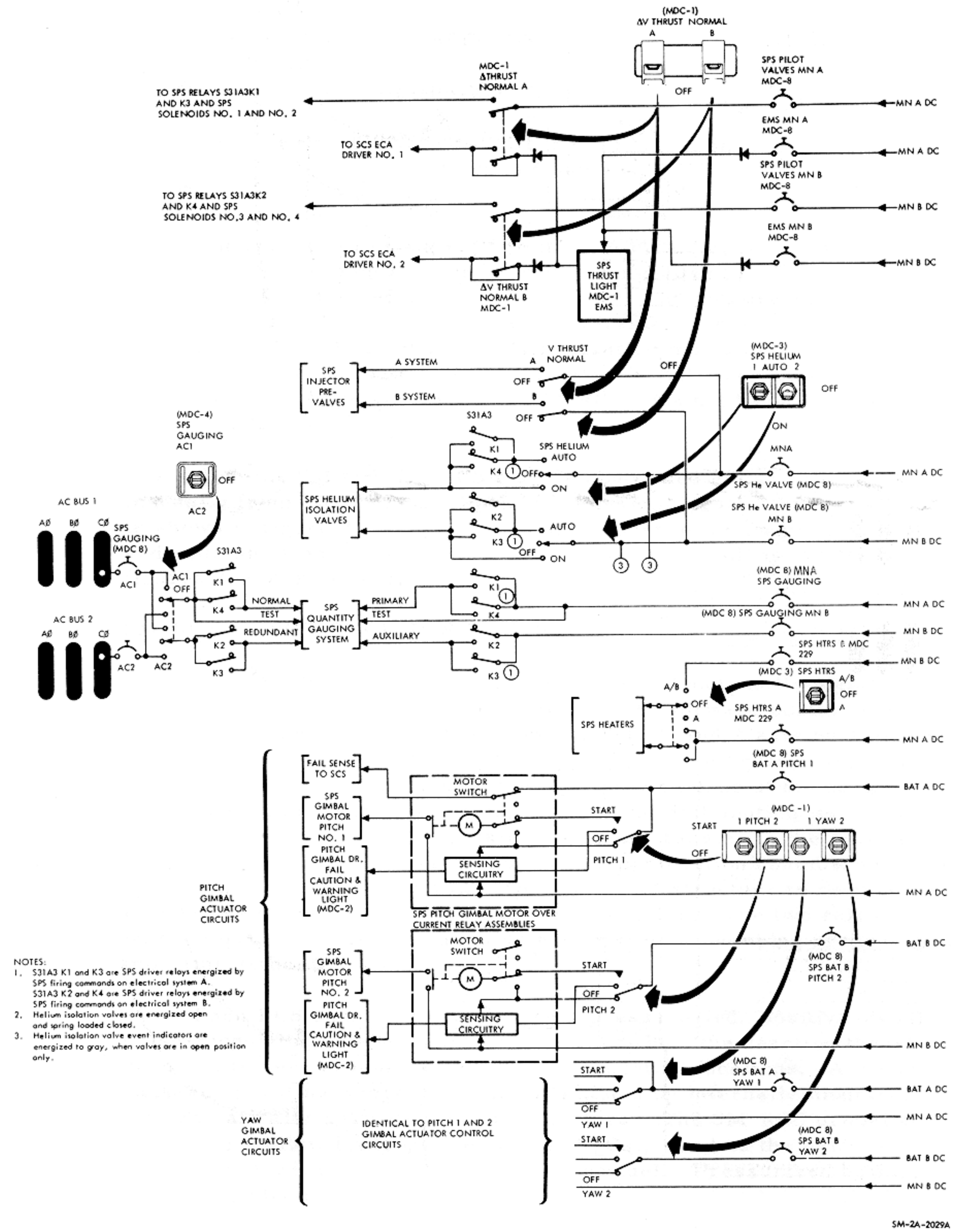

NOTES:
1. S31A3 K1 and K3 are SPS driver relays energized by SPS firing commands on electrical system A. S31A3 K2 and K4 are SPS driver relays energized by SPS firing commands on electrical system B.
2. Helium isolation valves are energized open and spring loaded closed.
3. Helium isolation valve event indicators are energized to gray, when valves are in open position only.

Figure 2.4-18. Electrical Power Distribution (CSM 112 and Subs)

SECTION 2

SUBSECTION 2.5

REACTION CONTROL SYSTEM (RCS)
(CSM 106 and subs)

The Apollo command service module includes two separate reaction control systems completely independent designated SM RCS and CM RCS. The SM RCS is utilized to control S/C rates and rotation in all three axis in addition to any minor translation requirements including CSM-S-IVB separation, SPS ullage and CM-SM separation maneuvers. The CM RCS is utilized to control CM rates and rotation in all three axis after CM-SM separation and during entry. The CM RCS does not have automatic translation capabilities.

Both the SM and CM RCS may be controlled either automatically or manually from the command module. Physical location of the RCS engines is shown in figure 2.5-1. Engine firing sequence for specific maneuvers and individual engine circuit breaker power control is shown in figures 2.5-2 through 2.5-6.

2.5.1 SM RCS FUNCTIONAL DESCRIPTION.

The SM RCS consists of four individual, functionally identical packages, located 90 degrees apart around the forward portion (+X axis) of the SM periphery, and offset from the S/C Y and Z axis by 7 degrees 15 minutes. Each package, configuration, called a "quad," is such that the reaction engines are mounted on the outer surface of the panel and the remaining components are inside. Propellant distribution lines are routed through the panel skin to facilitate propellant transfer to the reaction engine combustion chambers. The engine combustion chambers are canted approximately 10 degrees away from the panel structure to reduce the effects of exhaust gas on the service module skin. The two roll engines on each quad are offset-mounted to accommodate plumbing in the engine mounting structure.

Each RCS package incorporates a pressure-fed, positive-expulsion, pulse-modulated, bipropellant system to produce the reaction thrust required to perform the various SM RCS control functions. Acceptable package operating temperature is maintained by internally mounted, thermostatically controlled electric heaters. The SM RCS propellants consist of inhibited nitrogen tetroxide (N_2O_4), used as the oxidizer, and monomethylhydrazine (MMH), used as the fuel. Pressurized helium gas is the propellant transferring agent.

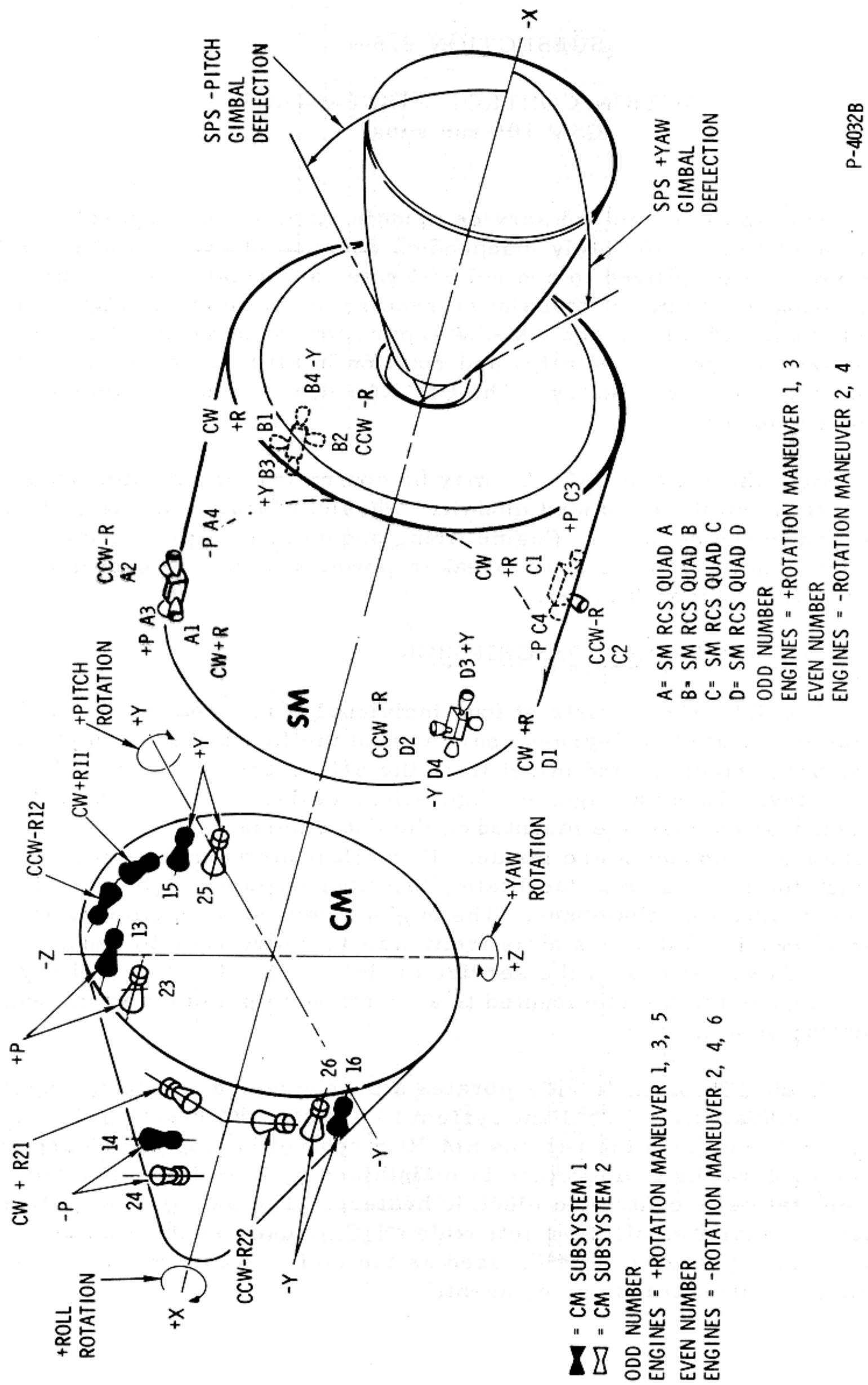

Figure 2.5-1. CM-SM Engine Locations

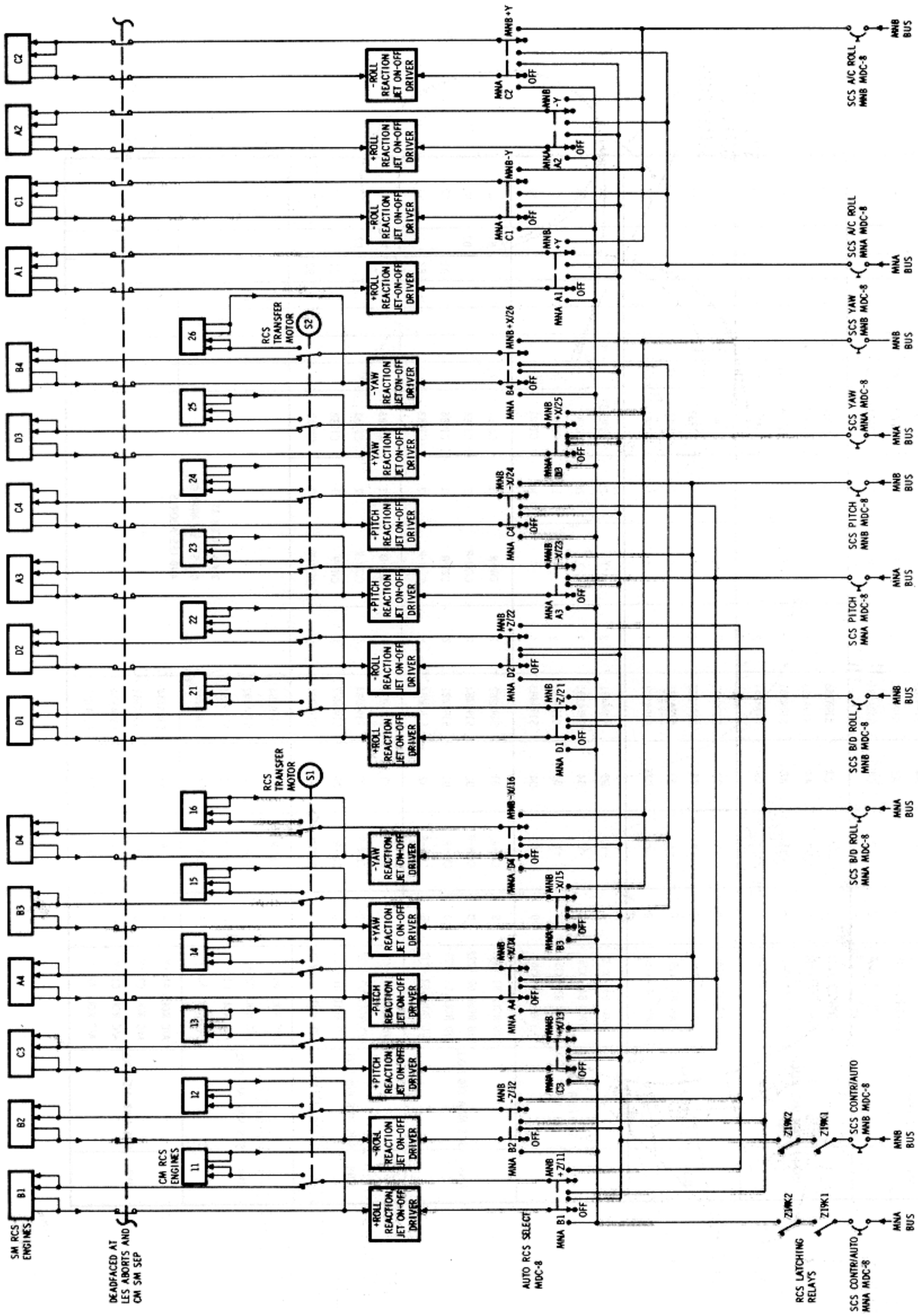

Figure 2.5-2. CSM RCS Auto Control

BUS POWER	CIRCUIT BREAKER MDC 8	AUTORCS SELECT SWITCHES MDC 8	SM ENGINE				CM ENGINE					SM ENGINE UTILIZATION FOR TRANSLATION MANEUVERS						TRANSFER MOTOR
			QUAD	MANEUVER	SCS NO.	PROP. NO.	SYSTEM	MANEUVER	SCS NO.	PROP. NO.		-X	+X	-Y	+Y	-Z	+Z	
MNA	SCS MNA PITCH	PITCH C3 +X13	C	+P	C3	S19A3B3	1	+P	13	C19B7			C3					S1
		PITCH A4 +X14	A	-P	A4	S19A1B3	1	-P	14	C19B11			A4					S1
		PITCH A3 -X23	A	+P	A3	S19A1B1	2	+P	23	C19B8		A3						S2
		PITCH C4 -X24	C	-P	C4	S19A3B1	2	-P	24	C19B12		C4						S2
MNB	SCS MNB PITCH	PITCH C3 +X13	C	+P	C3	S19A3B3	1	+P	13	C19B7			C3					S1
		PITCH A4 +X14	A	-P	A4	S19A1B3	1	-P	14	C19B11			A4					S1
		PITCH A3 -X23	A	+P	A3	S19A1B1	2	+P	23	C19B8		A3						S2
		PITCH C4 -X24	C	-P	C4	S19A3B1	2	-P	24	C19B12		C4						S2
MNA	SCS MNA YAW	YAW D3 +X25	D	+Y	D3	S19A4B1	2	+Y	25	C19B10			D3					S2
		YAW B4 +X26	B	-Y	B4	S19A2B1	2	-Y	26	C19B2			B4					S2
		YAW B3 -X15	B	+Y	B3	S19A2B3	1	+Y	15	C19B9		B3						S1
		YAW D4 -X16	D	-Y	D4	S19A4B3	1	-Y	16	C19B1		D4						S1
MNB	SCS MNB YAW	YAW D3 +X 25	D	+Y	D3	S19A4B1	2	+Y	25	C19B10			D3					S2
		YAW B4 +X26	B	-Y	B4	S19A2B1	2	-Y	26	C19B2			B4					S2
		YAW B3 -X15	B	+Y	B3	S19A2B3	1	+Y	15	C19B9		B3						S1
		YAW D4 -X16	D	-Y	D4	S19A4B3	1	-Y	16	C19B1		D4						S1
MNA	SCS MNA B/D ROLL	B/D ROLL B1 +X11	B	CW+R	B1	S19A2B2	1	CW+R	11	C19B5	B1							S1
		B/D ROLL D2 +Z22	D	CCW-R	D2	S19A4B4	2	CCW-R	22	C19B4	D2							S2
		B/D ROLL D1 -Z21	D	CW+R	D1	S19A4B2	2	CW+R	21	C19B6				D1				S2
		B/D ROLL B2 -Z12	B	CCW-R	B2	S19A2B4	1	CCW-R	12	C19B3				B2				S1
MNB	SCS MNB B/D ROLL	B/D ROLL B1 +X11	B	CW+R	B1	S19A2B2	1	CW+R	11	C19B5	B1							S1
		B/D ROLL D2 +Z22	D	CCW-R	D2	S19A4B4	2	CCW-R	22	C19B4	D2							S2
		B/D ROLL D1 -Z21	D	CW+R	D1	S19A4B2	2	CW+R	21	C19B6				D1				S2
		B/D ROLL B2 -Z12	B	CCW-R	B2	S19A2B4	1	CCW-R	12	C19B3				B2				S1
MNA	SCS MNA A/C ROLL	A/C ROLL A1 +Y	A	CW+R	A1	S19A1B4	1	DEAD FACED AT CM SM SEPARATION AND LES ABORTS							A1			
		A/C ROLL C2 +Y	C	CCW-R	C2	S19A3B2									C2			
		A/C ROLL C1 -Y	C	CW+R	C1	S19A3B4								C1				
		A/C ROLL A2 -Y	A	CCW-R	A2	S19A1B2								A2				
MNB	SCS MNB A/C ROLL	A/C ROLL A1 +Y	A	CW+R	A1	S19A1B4									A1			
		A/C ROLL C2 +Y	C	CCW-R	C2	S19A3B2									C2			
		A/C ROLL C1 -Y	C	CW+R	C1	S19A3B4								C1				
		A/C ROLL A2 -Y	A	CCW-R	A2	S19A1B2								A2				

P-6056B

Figure 2.5-3. CM-SM RCS Engine Power Supplies (Automatic)

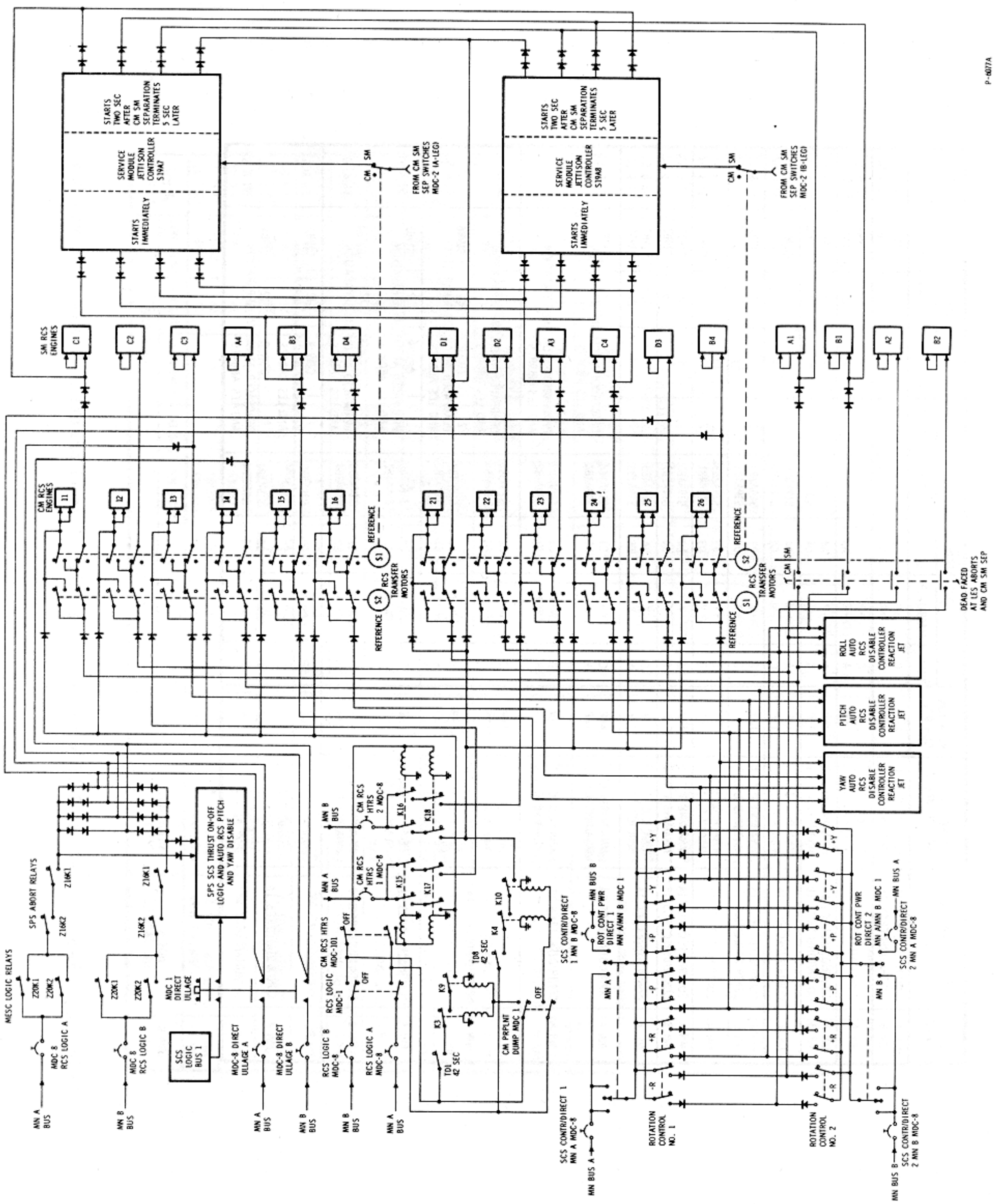

P-6077A

RCS

Figure 2.5-4. CSM RCS Direct Control

BUS POWER	CIRCUIT BREAKER MDC-8	DIRECT I SWITCH MDC 1	ROTATION CONTROL	SM ENGINE				CM ENGINE				TRANSFER MOTOR
				QUAD	MANEUVER	SCS NO.	PROP NO.	SYSTEM	MANEUVER	SCS NO.	PROP NO.	
MN A MN B	CONTR/DIRECTRCS 1A CONTR/DIRECTRCS 1B	MNA/MNB R.C. 1 MNA/MNB R.C. 1	I+P I+P	C A	+P +P	C3 A3	S19A3B3 S19A1B1	1 2	+P +P	13 23	C19B7 C19B8	S2 & S1 S1 & S2
MN A	CONTR/DIRECTRCS 1A	MNA R.C. 1 MNA R.C. 1	I+P I+P	C A	+P +P	C3 A3	S19A3B3 S19A1B1	1 2	+P +P	13 23	C19B7 C19B8	S2 & S1 S1 & S2
MN A MN B	CONTR/DIRECTRCS 1A CONTR/DIRECTRCS 1B	MNA/MNB R.C. 1 MNA/MNB R.C. 1	I-P I-P	A C	-P -P	A4 C4	S19A1B3 S19A3B1	1 2	-P -P	14 24	C19B11 C19B12	S2 & S1 S1 & S2
MN A	CONTR/DIRECTRCS 1A	MNA R.C. 1 MNA R.C. 1	I-P I-P	A C	-P -P	A4 C4	S19A1B3 S19A3B1	1 2	-P -P	14 24	C19B11 C19B12	S2 & S1 S1 & S2
MN A MN B	CONTR/DIRECTRCS 1A CONTR/DIRECTRCS 1B	MNA/MNB R.C. 1 MNA/MNB R.C. 1	I+Y I+Y	B D	+Y +Y	B3 D3	S19A2B3 S19A4B1	1 2	+Y +Y	15 25	C19B9 C19B10	S2 & S1 S1 & S2
MN A	CONTR/DIRECTRCS 1A	MNA R.C. 1 MNA R.C. 1	I+Y I+Y	B D	+Y +Y	B3 D3	S19A2B3 S19A4B1	1 2	+Y +Y	15 25	C19B9 C19B10	S2 & S1 S1 & S2
MN A MN B	CONTR/DIRECTRCS 1A CONTR/DIRECTRCS 1B	MNA/MNB R.C. 1 MNA/MNB R.C. 1	I-Y I-Y	D B	-Y -Y	D4 B4	S19A4B3 S19A2B1	1 2	-Y -Y	16 26	C19B1 C19B2	S2 & S1 S1 & S2
MN A	CONTR/DIRECTRCS 1A	MNA R.C. 1 MNA R.C. 1	I-Y I-Y	D B	-Y -Y	D4 B4	S19A4B3 S19A2B1	1 2	-Y -Y	16 26	C19B1 C19B2	S2 & S1 S1 & S2
MN A	CONTR/DIRECTRCS 1A	MNA/MNB R.C. 1 MNA/MNB R.C. 1	I+R I+R	C A	CW+R CW+R	C1 A1	S19A3B4 S19A1B4	1 DEADFACED AT CM SM SEPARATION AND LES ABORTS	CW+R	11	C19B5	S2 & S1
MN B	CONTR/DIRECTRCS 1B	MNA/MNB R.C. 1 MNA/MNB R.C. 1	I+R I+R	D B	CW+R CW+R	D1 B1	S19A4B2 S19A2B2	2 DEADFACED AT CM SM SEPARATION AND LES ABORTS	CW+R	21	C19B6	S1 & S2
MN A	CONTR/DIRECTRCS 1A	MNA R.C. 1 MNA R.C. 1	I+R I+R	C A	CW+R CW+R	C1 A1	S19A3B4 S19A1B4	1 DEADFACED AT CM SM SEPARATION AND LES ABORTS	CW+R	11	C19B5	S2 & S1
		MNA R.C. 1 MNA R.C. 1	I+R I+R	D B	CW+R CW+R	D1 B1	S19A4B2 S19A2B2	2 DEADFACED AT CM SM SEPARATION AND LES ABORTS	CW+R	21	C19B6	S1 & S2
MN A	CONTR/DIRECTRCS 1A	MNA/MNB R.C. 1 MNA/MNB R.C. 1	I-R I-R	C A	CCW-R CCW-R	C2 A2	S19A3B2 S19A1B2	1 DEADFACED AT CM SM SEPARATION AND LES ABORTS	CCW-R	12	C19B3	S2 & S1
MN B	CONTR/DIRECTRCS 1B	MNA/MNB R.C. 1 MNA/MNB R.C. 1	I-R I-R	D B	CCW-R CCW-R	D2 B2	S19A4B4 S19A2B4	2 DEADFACED AT CM SM SEPARATION AND LES ABORTS	CCW-R	22	C19B4	S1 & S2
MN A	CONTR/DIRECTRCS 1A	MNA R.C. 1 MNA R.C. 1	I-R I-R	C A	CCW-R CCW-R	C2 A2	S19A3B2 S19A1B2	1 DEADFACED AT CM SM SEPARATION AND LES ABORTS	CCW-R	12	C19B3	S2 & S1
		MNA R.C. 1 MNA R.C. 1	I-R I-R	D B	CCW-R CCW-R	D2 B2	S19A4B4 S19A2B4	2 DEADFACED AT CM SM SEPARATION AND LES ABORTS	CCW-R	22	C19B4	S1 & S2

Figure 2.5-5. SM-CM RCS Engine Power Supplies (Direct) Rotation Control No. 1

BUS POWER	CIRCUIT BREAKER MDC-8	DIRECT 2 SWITCH MDC 1	ROTATION CONTROL	SM ENGINE				CM ENGINE				TRANSFER MOTOR
				QUAD	MANEUVER	SCS NO.	PROP NO.	SYSTEM	MANEUVER	SCS NO.	PROP NO.	
MN B MN A	CONTR/DIRECTRCS 2B CONTR/DIRECTRCS 2A	MNA/MNB R.C. 2 MNA/MNB R.C. 2	2+P 2+P	C A	+P +P	C3 A3	S19A3B3 S19A1B1	1 2	+P +P	13 23	C19B7 C19B8	S2 & S1 S1 & S2
MN B	CONTR/DIRECTRCS 2B	MNB R.C. 2 MNB R.C. 2	2+P 2+P	C A	+P +P	C3 A3	S19A3B3 S19A1B1	1 2	+P +P	13 23	C19B7 C19B8	S2 & S1 S1 & S2
MN B MN A	CONTR/DIRECTRCS 2B CONTR/DIRECTRCS 2A	MNA/MNB R.C. 2 MNA/MNB R.C. 2	2-P 2-P	A C	-P -P	A4 C4	S19A1B3 S19A3B1	1 2	-P -P	14 24	C19B11 C19B12	S2 & S1 S1 & S2
MN B	CONTR/DIRECTRCS 2B	MNB R.C. 2 MNB R.C. 2	2-P 2-P	A C	-P -P	A4 C4	S19A1B3 S19A3B1	1 2	-P -P	14 24	C19B11 C19B12	S2 & S1 S1 & S2
MN B MN A	CONTR/DIRECTRCS 2B CONTR/DIRECTRCS 2A	MNA/MNB R.C. 2 MNA/MNB R.C. 2	2+Y 2+Y	B D	+Y +Y	B3 D3	S19A2B3 S19A4B1	1 2	+Y +Y	15 25	C19B9 C19B10	S2 & S1 S1 & S2
MN B	CONTR/DIRECTRCS 2B	MNB R.C. 2 MNB R.C. 2	2+Y 2+Y	B D	+Y +Y	B3 D3	S19A2B3 S19A4B1	1 2	+Y +Y	15 25	C19B9 C19B10	S2 & S1 S1 & S2
MN B MN A	CONTR/DIRECTRCS 2B CONTR/DIRECTRCS 2A	MNA/MNB R.C. 2 MNA/MNB R.C. 2	2-Y 2-Y	D B	-Y -Y	D4 B4	S19A4B3 S19A2B1	1 2	-Y -Y	16 26	C19B1 C19B2	S2 & S1 S1 & S2
MN B	CONTR/DIRECTRCS 2B	MNB R.C. 2 MNB R.C. 2	2-Y 2-Y	D B	-Y -Y	D4 B4	S19A4B3 S19A2B1	1 2	-Y -Y	16 26	C19B1 C19B2	S2 & S1 S1 & S2
MN B MN A	CONTR/DIRECTRCS 2B CONTR/DIRECTRCS 2A	MNA/MNB R.C. 2 MNA/MNB R.C. 2 MNA/MNB R.C. 2 MNA/MNB R.C. 2	2+R 2+R 2+R 2+R	C A D B	CW+R CW+R CW+R CW+R	C1 A1 D1 B1	S19A3B4 S19A1B4 S19A4B2 S19A2B2	1 CW+R 11 C19B5 DEADFACED AT CM SM SEPARATION AND LES ABORTS 2 CW+R 21 C19B6 DEADFACED AT CM SM SEPARATION AND LES ABORTS				S2 & S1 S1 & S2
MN B	CONTR/DIRECTRCS 2B	MNB R.C. 2 MNB R.C. 2 MNB R.C. 2 MNB R.C. 2	2+R 2+R 2+R 2+R	C A D B	CW+R CW+R CW+R CW+R	C1 A1 D1 B1	S19A3B4 S19A1B4 S19A4B2 S19A2B2	1 CW+R 11 C19B5 DEADFACED AT CM SM SEPARATION AND LES ABORTS 2 CW+R 21 C19B6 DEADFACED AT CM SM SEPARATION AND LES ABORTS				S2 & S1 S1 & S2
MN B MN A	CONTR/DIRECTRCS 2B CONTR/DIRECTRCS 2A	MNA/MNB R.C. 2 MNA/MNB R.C. 2 MNA/MNB R.C. 2 MNA/MNB R.C. 2	2-R 2-R 2-R 2-R	C A D B	CCW-R CCW-R CCW-R CCW-R	C2 A2 D2 B2	S19A3B2 S19A1B2 S19A4B4 S19A2B4	1 CCW-R 12 C19B3 DEADFACED AT CM SM SEPARATION AND LES ABORTS 2 CCW-R 22 C19B4 DEADFACED AT CM SM SEPARATION AND LES ABORTS				S2 & S1 S1 & S2
MN B	CONTR/DIRECTRCS 2B	MNB R.C. 2 MNB R.C. 2 MNB R.C. 2 MNB R.C. 2	2-R 2-R 2-R 2-R	C A D B	CCW-R CCW-R CCW-R CCW-R	C2 A2 D2 B2	S19A3B2 S19A1B2 S19A4B4 S19A2B4	1 CCW-R 12 C19B3 DEADFACED AT CM SM SEPARATION AND LES ABORTS 2 CCW-R 22 C19B4 DEADFACED AT CM SM SEPARATION AND LES ABORTS				S2 & S1 S1 & S2

P-6067E

Figure 2.5-6. SM-CM RCS Engine Power Supplies (Direct) Rotation Control No. 2

The reaction engines may be pulse-fired, producing short-thrust impulses or continuously fired, producing a steady-state thrust level. The short-pulse firing permits attitude-hold modes of operation and extremely accurate attitude alignment maneuvers during navigational sightings. CSM attitude control is normally maintained by utilizing the applicable pitch, yaw, and roll engines on all four quads. However, in the event of a malfunction or in order to conserve propellants, complete attitude control can be maintained with only two adjacent quads operating.

A functional flow diagram for a SM RCS quad is shown in figure 2.5-7. The helium storage vessel supplies helium to two solenoid-operated helium isolation valves that are normally open throughout the mission. This allows allows helium pressure to the regulators, downstream of each helium isolation valve, reducing the high-pressure helium to a desired working pressure.

Regulated helium pressure is directed through series-parallel check valves. The check valves permit helium pressure to the fuel and oxidizer tanks, and prevent reverse flow of propellant vapors or liquid. A pressure relief valve is installed in the pressure lines between the check valves and propellant tanks to protect the propellant tanks from any excessive pressures.

Helium entering the propellant tanks creates a pressure buildup around the positive expulsion bladders forcing the propellants in the tank to be expelled into the propellant distribution lines. Propellants from the primary fuel and oxidizer tanks flow through the primary propellant isolation valves. Propellants from the secondary fuel and oxidizer tanks flow through the secondary propellant isolation valves. The secondary propellant fuel pressure isolation valve will be opened when the secondary propellant fuel pressure transducer (located downstream of the primary fuel tank) senses a drop in pressure. The drop in pressure indicates the primary fuel tank is at propellant depletion. Opening the secondary propellant fuel pressure valve at this time allows regulated helium pressure to the secondary fuel tank. It has been determined that due to the O/F ratio the fuel tank will deplete ahead of the oxidizer tanks, thus accounting for the secondary propellant fuel pressure isolation valve installation in the helium pressurization path to the secondary fuel tank only.

Oxidizer and fuel is distributed to the four engines by a parallel feed system. The fuel valve on each engine opens approximately two milliseconds prior to the oxidizer valve, to provide proper engine operation. Each valve assembly contains orifices which meter the propellant flow to obtain a nominal 2:1 oxidizer/fuel ratio by weight. The oxidizer and fuel

RCS ELECTRICAL CONTROL
CSM 103 & SUBS

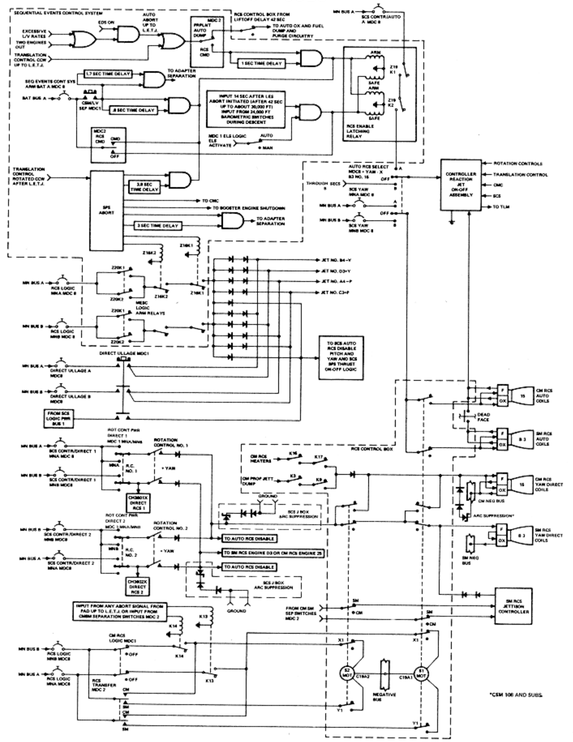

SM RCS SUBSYSTEM QUAD
CSM 104 & SUBS

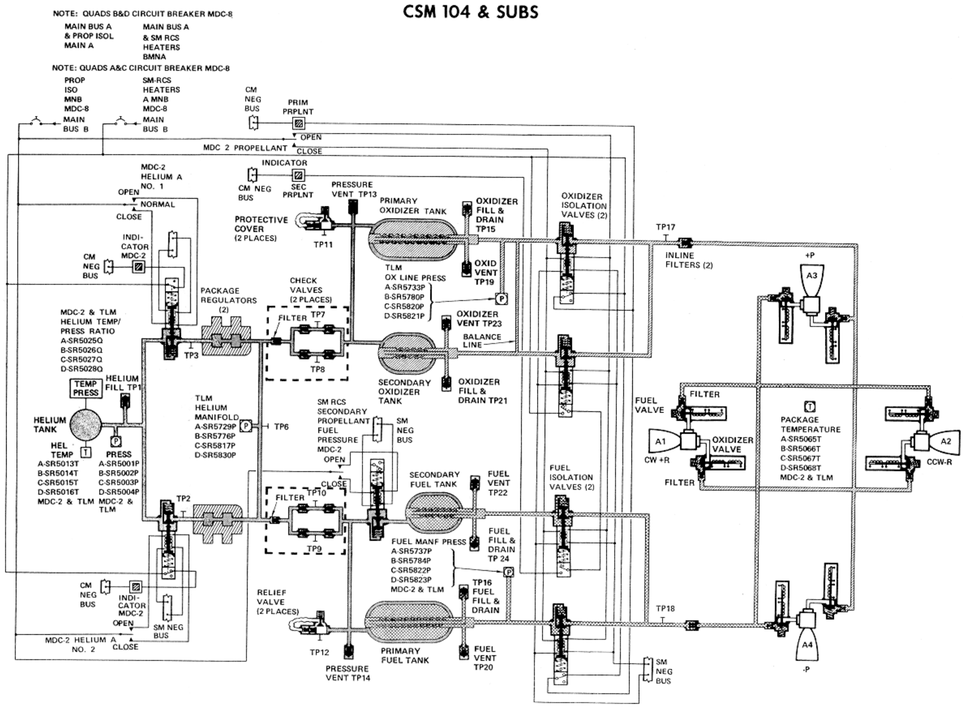

SM RCS ELECTRICAL HEATERS
CSM 106 & SUBS

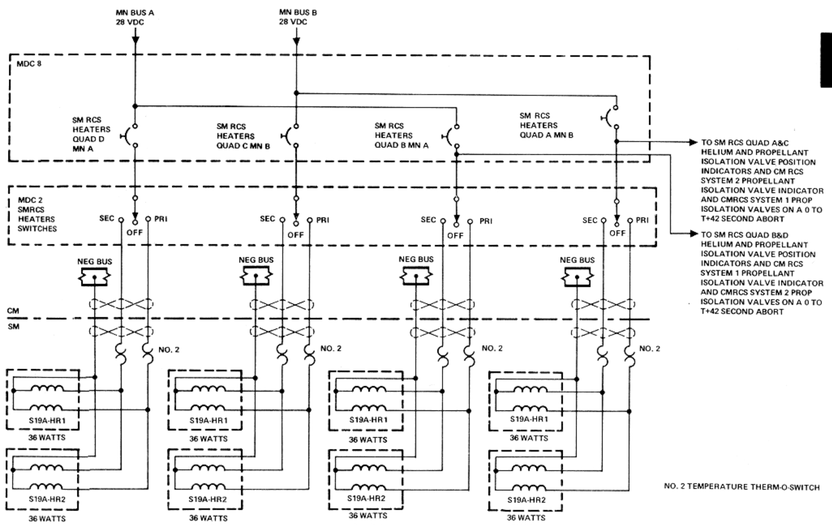

Figure 2.5-7. SM RCS Functional Flow

RCS

impinge, atomize, and are ignited by hypergolic reaction within the combustion chamber. The injector valves are controlled automatically by the controller reaction jet ON-OFF assembly. Manual direct control is provided for rotational maneuvers and direct ullage only. The engine injector valves are spring-loaded closed. This system configuration maintains propellants under constant pressure, at the engine injector valves, providing rapid consistent response rates to thrust ON-OFF commands.

2.5.2 SM RCS MAJOR COMPONENT/SUBSYSTEM DESCRIPTION.

The SM RCS is composed of four separate, individual quads, each quad containing the following four major subsystems:

- Pressurization
- Propellant - primary/secondary
- Rocket engine
- Temperature control system

2.5.2.1 Pressurization Subsystem.

The pressurization subsystem regulates and distributes helium to the propellant tanks (figure 2.5-7). It consists of a helium storage tank, isolation valves, pressure regulators, and lines necessary for filling, draining, and distribution of the helium.

2.5.2.1.1 Helium Supply Tank.

The total high-pressure helium supply is contained within a single-spherical storage tank.

2.5.2.1.2 Helium Isolation Valve.

The helium isolation valves between the helium tank and pressure regulators contain two solenoids: one solenoid is energized momentarily to magnetically latch the valve open; the remaining solenoid is energized momentarily to unlatch the valve, and spring pressure and helium pressure forces the valve closed. The helium isolation valves in each quad are individually controlled by their own individual SM RCS HELIUM switch on MDC-2. The momentary OPEN position energizes the valve into the magnetic latch (open). The momentary CLOSE position energizes the valve to unlatch the magnetic latch (closed). The center position removes electrical power from either solenoid. The valves are normally open in respect to system pressure substantiating the magnetic latching feature for power conservation purposes during the mission in addition to prevent overheating of the valve coil.

A position switch contained within each valve controls a position indicator above each switch on MDC-2. When the valve is open, the position switch is open and the indicator on MDC-2 is gray (same color as the panel), indicating the valve is in its normal position. When the valve is closed, the position switch is closed and the indicator on MDC-2 is barber pole (diagonal lines), indicating the valve is in its abnormal position.

The valve is closed in the event of a pressure regulator unit problem and during ground servicing.

2.5.2.1.3 Pressure Regulator Assemblies.

Helium pressure regulation is accomplished by two regulator assemblies connected in parallel, with one assembly located downstream of each helium isolation valve. Each assembly incorporates two (primary and secondary) regulators connected in series and a filter at the inlet to each regulator. The secondary regulator remains open as the primary regulator functions properly. In the event of the primary regulator failing open, the secondary regulator, in series, will maintain slightly higher but acceptable pressures.

2.5.2.1.4 Check Valve Assemblies.

Two check valve assemblies, one assembly located upstream of the oxidizer tanks and the other upstream of the fuel tanks, permit helium flow in the downstream direction only. This prevents propellant and/or propellant vapor reverse flow into the pressurization system if seepage or failure occurs in the propellant tank bladders. Filters are incorporated in the inlet to each check valve assembly and each test port.

2.5.2.1.5 Pressure Relief Valves.

The helium relief valve contains a burst diaphragm, filter, a bleed device, and the relief valve. The burst diaphragm is installed to provide a more positive seal against helium than that of the actual relief valve. The burst diaphragm ruptures at a predetermined pressure. The burst diaphragm is of the nonfragmentation type, but in the event of any fragmentation, the filter retains any fragmentation and prevents particles from flowing onto the relief valve seat. The relief valve will relieve at a pressure slightly higher than that of the burst diaphragm rupture pressure and relieve the excessive pressure overboard protecting the fuel and oxidizer tanks. The relief valve will reseat at a predetermined pressure.

A pressure bleed device is incorporated between the burst diaphragm and relief valve. The bleed valve vents the cavity between the burst diaphragm and relief valve in the event of any leakage across the diaphragm, or vents the cavity upon completion of performing a checkout of the relief valve from the vent port on the relief valve. The bleed device is normally open and will close when the pressure increases up to a predetermined pressure. The bleed device automatically opens when the pressure decreases to the bleed valve opening pressure.

A protective cover is installed over the relief valve vent port and bleed valve cavity port to prevent moisture accumulation and foreign matter entrance. The covers are left in place at lift-off.

2.5.2.1.6 Distribution Plumbing.

Brazed joint tubing is used to distribute regulated helium in each RCS quad from the helium storage vessels to the propellant tanks.

2.5.2.1.7 Secondary Propellant Fuel Pressure Isolation Valve.

The secondary propellant fuel pressure isolation valve in the pressurization line to the secondary fuel tank contains two solenoids: one solenoid is energized momentarily to magnetically latch the valve open; the remaining solenoid is energized momentarily to unlatch the valve, and spring pressure and helium pressure forces the valve closed. The secondary propellant fuel pressure isolation valve in each quad is controlled individually by its own individual SM RCS SEC PRPLNT FUEL PRESS switch on MDC-2. The momentary OPEN position energizes the valve into the magnetic latch (open); the momentary CLOSE position energizes the valve to unlatch the magnetic latch (closed). The center position removes electrical power from either solenoid. The valve is normally closed in respect to system pressure.

There is no position indicator talkback of the valve position to the MDC.

The valve will be opened when the secondary propellant fuel pressure decreases, indicating the primary fuel tank is depleted.

2.5.2.2 Propellant Subsystem.

This subsystem consists of two oxidizer tanks, two fuel tanks, two oxidizer and two fuel isolation valves, a fuel and oxidizer inline filter, oxidizer balance line, and associated distribution plumbing.

2.5.2.2.1 Primary and Secondary Oxidizer Tanks.

The oxidizer supply is contained in two titanium alloy, hemispherically domed cylindrical tanks. The tanks are mounted to the RCS panel. Each tank contains a diffuser tube assembly and a teflon bladder for positive expulsion of the oxidizer. The bladder is attached to the diffuser tube at each end of each tank. The diffuser tube acts as the propellant outlet.

When the tanks are pressurized, the helium surrounds the entire bladder, exerting a force which causes the bladder to collapse about the propellant, forcing the oxidizer into the diffuser tube assembly and on out of the tank outlet into the manifold, providing expulsion during zero g's.

An oxidizer fluid balance line is incorporated on the oxidizer tank side of the propellant isolation valves between the primary and secondary oxidizer tanks (figure 2.5-7). In prelaunch, prior to lift-off, the helium and four propellant isolation valves are opened. The primary oxidizer tank will flow oxidizer to the secondary tank because the primary tank is located above the secondary tank. This displaces the ullage area in the secondary tank to the primary and fills the secondary full of oxidizer. If the launch continues normally, this creates no problem. However, if a long hold period occurs, the four propellant isolation valves will be closed and the fluid in the secondary tank will expand because of thermal growth. The fluid balance line allows the oxidizer to bleed from the secondary to the primary tank preventing possible rupture of the secondary tank.

The fuel tanks could have a similar problem except that the secondary propellant fuel pressure valve is closed prior to the opening of the four propellant isolation valves. This prevents transfer of fuel from one tank to the other.

2.5.2.2.2 Primary and Secondary Fuel Tanks.

The fuel supply is contained in two tanks that are similar in material, construction, and operation to that of the oxidizer tanks.

2.5.2.2.3 Propellant Isolation Shutoff Valve.

Each propellant isolation valve contains two solenoids: one that is energized momentarily to magnetically latch the valve open; and the remaining solenoid is energized momentarily to unlatch the magnetic latch, and spring pressure and propellant pressure closes the valve. The propellant isolation valves located in the primary fuel and oxidizer lines, as well as the secondary fuel and oxidizer lines in each quad, are all controlled by a single SM RCS propellant switch on MDC-2. The SM RCS

propellant switch on MDC-2 for each quad placed to OPEN momentarily energizes the two primary and secondary fuel and oxidizer isolation valves into the magnetic latch (open); the CLOSE momentary position energizes the valve to unlatch the magnetic latch (closed). The center position removes electrical power from either solenoid.

Each quad, primary fuel, and oxidizer tank isolation valve contains a position switch that is in parallel to one PRIM PRPLNT position indicator above the SM RCS propellant switch on MDC-2. When the position indicator switch in each valve is actuated open, the PRIM PRPLNT indicator on MDC-2 is gray (same color as the panel) indicating both valves are open with respect to the fluid flow. Each quad, secondary tank fuel and oxidizer isolation valve contains a position switch that is in series to one SEC PRPLNT position indicator below the SM RCS propellant switch on MDC-2. When the position indicator switch in each valve is actuated closed, the SEC PRPLNT indicator on MDC-2 is gray (same color as the panel) indicating the valves are open to the fluid flow. When the position indicator switch in either primary fuel or oxidizer isolation valve is actuated closed, the PRIM PRPLNT position indicator on MDC-2 is barber pole (diagonal lines) indicating that either valve or both valves are closed in respect to the fluid flow. When the position indicator switch in either secondary fuel or oxidizer isolation valve is actuated open, the SEC PRPLNT position indicator on MDC-2 is barber pole (diagonal lines) indicating that either valve or both valves are closed in respect to the fluid flow.

The primary and secondary fuel and oxidizer isolation valves of each quad are normally open to the fluid flow.

The primary and secondary fuel and oxidizer isolation valves of a quad are closed to the fluid flow in the event of a failure downstream of the propellant isolation valves such as line rupture, runaway thruster, etc.

2.5.2.2.4 Distribution Plumbing.

Propellant distribution plumbing within each quad is functionally identical. Each quad contains separate similar oxidizer and fuel plumbing networks. Propellants, within their respective networks, are directed from the supply tanks through manifolds for distribution to the four engines in the clusters.

2.5.2.2.5 Propellant, In-Line Filters.

In-line filters are installed in the fuel and oxidizer lines downstream of the propellant shutoff valves and prior to the engine manifold contained within the engine housing.

The in-line filters are installed to prevent any particles from flowing into the engine injector valves and engine injector.

2.5.2.3 Engine Assemblies.

The service module reaction control system engines are radiation cooled, pressure fed, bipropellant thrust generators which can be operated in either the pulse or steady state mode. (These modes are defined as a firing duration of less than one second, and one second or more, respectively.)

Each engine has a fuel and oxidizer injector solenoid control valve. The injector solenoid control valves control the flow of propellants by responding to electrical commands (automatic or manual) generated by the controller reaction jet ON-OFF assembly or direct RCS respectively. Each engine contains an injector head assembly which directs the flow of each propellant from the injector solenoid control valves to the combustion chamber where the propellants atomize and ignite (hypergolic) producing thrust. A filter is incorporated at the inlet of each fuel and oxidizer solenoid injector valve. An orifice is installed in the inlet of each fuel and oxidizer solenoid injector valve that meters the propellant flow to obtain a nominal 2:1 oxidizer-fuel ratio by weight.

2.5.2.3.1 Propellant Solenoid Injector Control Valves (Fuel and Oxidizer).

The propellant solenoid injector valves utilize two coaxially wound coils, one for automatic and one for direct manual operation. The automatic coil is used when the thrust command originates from the controller reaction jet ON-OFF assembly which is the electronic circuitry that selects the required automatic coils to be energized for a given maneuver. The direct manual coils are used when the thrust command originates at the rotation control (direct mode), direct ullage pushbutton, SPS abort or the SM jettison controller (figure 2.5-7).

The solenoid valves are spring-loaded closed and energized open.

The reaction time of the valves are illustrated in figures 2.5-8 and 2.5-9.

Figure 2.5-8 illustrates a thrusting duration of 15 seconds (steady state). The electrical on signal is received within either the automatic (normal) or manual direct coils of the engine injector valves. At 14 seconds after the receipt of the thrust on signal, the automatic or manual direct coils are deenergized and the injector valves spring-load closed. However, due to the valve lag and residual propellant flow downstream of the injector valves, thrust output continues until the residuals have burned which establishes the cutoff transient.

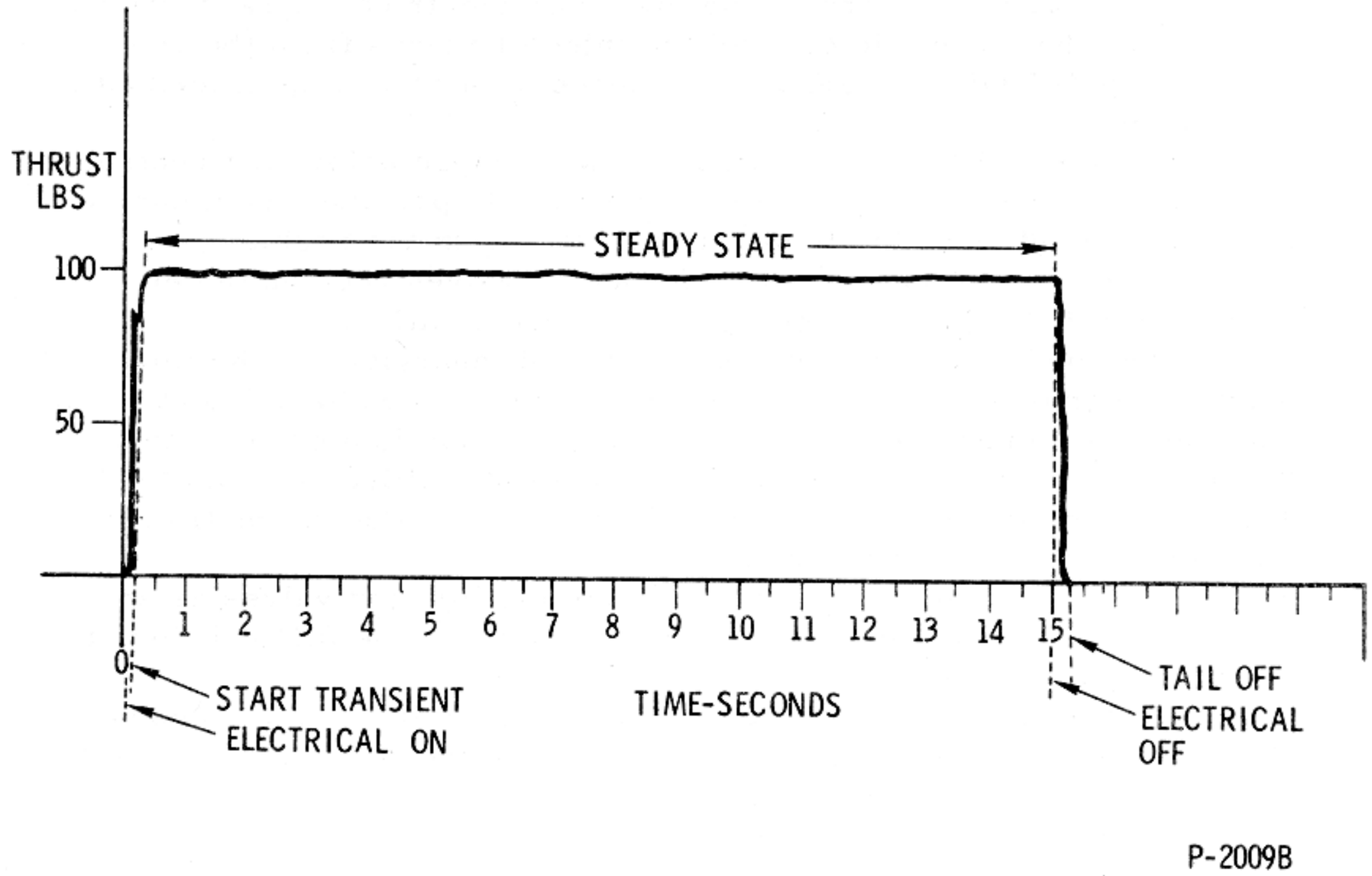

Figure 2.5-8. SM RCS Steady State Operation - Typical

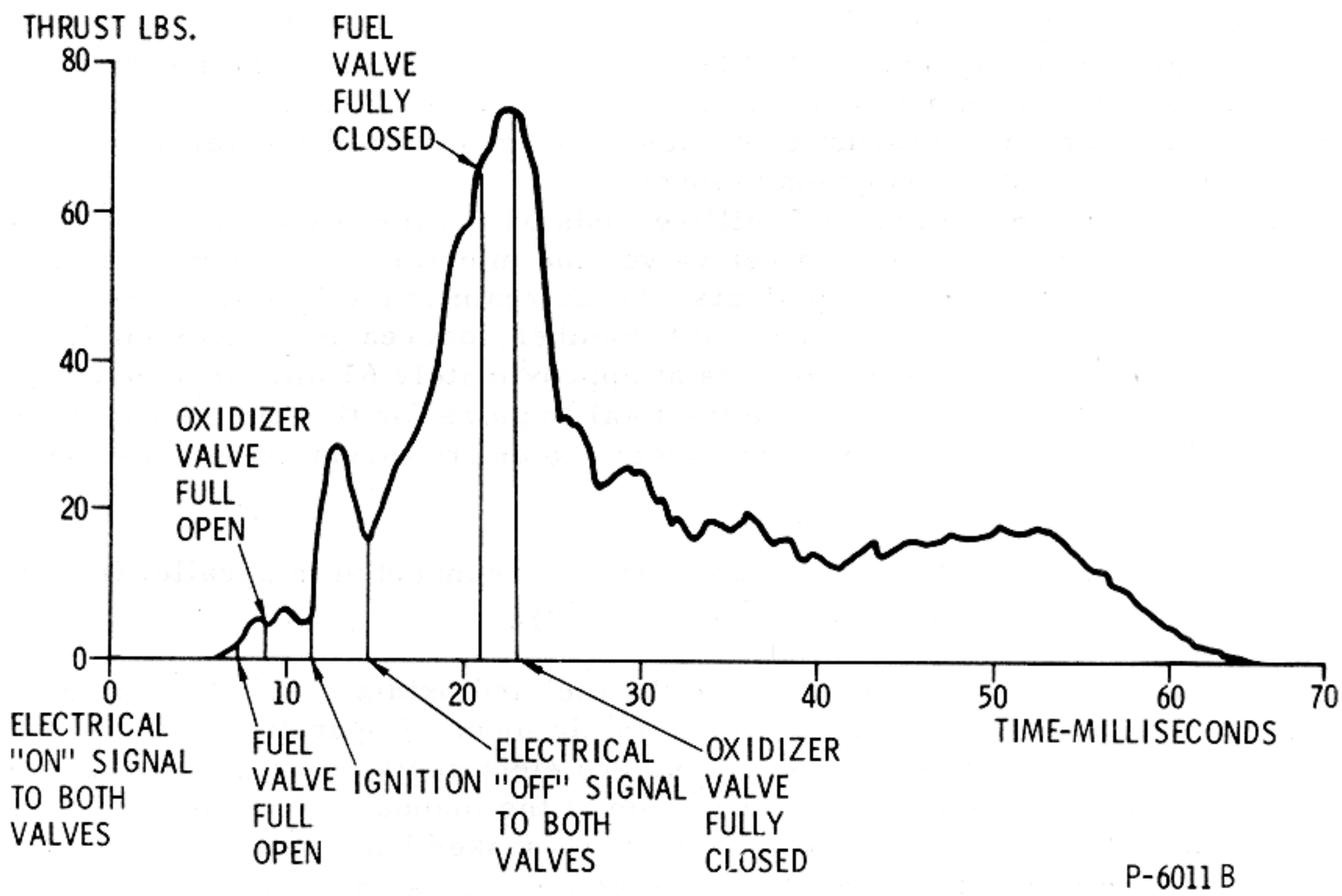

Figure 2.5-9. SM RCS Engine Minimum Total Impulse - Typical

Figure 2.5-9 illustrates the minimum electrical signal that can be provided to the automatic coils of the injector valves from the controller reaction jet ON-OFF assembly. Sequence of operation is described in the subsequent steps:

a. A time of 12 to 18 milliseconds will elapse before the controller reaction jet ON-OFF assembly can electrically provide a command off signal to the automatic coils of injector valves on the engine.

b. When the automatic coils of injector valves receive the electrical on signal, injector valves are energized to open position.

c. The fuel injector valve automatic coil energizes to the fully open position in approximately 7 milliseconds, and the oxidizer injector valve automatic coil energizes to the fully open position in approximately 9 milliseconds, establishing an approximate 2-millisecond fuel lead. This is accomplished by varying the resistance of the automatic coils in the fuel and oxidizer injector valve.

d. The propellants start to flow from the injector valves as soon as they start to open to the premix igniter; however, the fuel will lead the oxidizer by 2 milliseconds.

e. The propellants flow into the premix igniter and the combustion chamber which creates some pressure, gas velocity, and thrust in the combustion chamber even though it is very small because the engine is operating in a space environment.

f. The pressure, gas velocity, and thrust continue to increase slightly until the valves reach the full open position.

g. At approximately 12-1/2 milliseconds, the propellants ignite (hypergolic), producing a spike of thrust upwards into the area of approximately 70 to 80 pounds. At 12 milliseconds minimum, the electrical signal is removed from automatic coils of the injector valves.

h. The engine thrust continues very erratic until the valves become deenergized and spring-load closed.

i. At approximately 7 milliseconds on the fuel valve and approximately 8 milliseconds on the oxidizer valve, the injector valves are fully closed.

j. The residual propellants, downstream of the injector valves, continue to flow into the combustion chamber, decreasing until complete thrust decay of 0 pounds occurs at approximately 65 milliseconds.

k. In order to determine the total impulse for this time span of operation (figure 2.5-9), everything under the entire thrust curve must be integrated.

The automatic coils are electrically connected in parallel from the controller reaction jet ON-OFF assembly.

The direct manual coils in the fuel and oxidizer injector valves provide a direct backup to the automatic mode of operation. The direct manual coils of the injector valves are electrically connected in series. The reason for the series connection of the manual coils are as follows:

a. To insure a fuel lead if any heat-soaked back into the direct manual coil windings, which would change the coil resistance and result in an oxidizer lead if the coils were connected in parallel.

b. The series connection from the fuel direct manual coil is positive to negative and to the oxidizer direct manual coil is negative to positive, then to ground. The reverse polarity on the oxidizer coil increases the arc suppression, reducing the arc at the rotation control in the direct RCS mode of operation. The direct manual coil opening time for the fuel injector valve is 26 milliseconds and the oxidizer is approximately 36 milliseconds. Closing time for the fuel and oxidizer direct manual coils is 55±25 milliseconds.

2.5.2.3.2 Injector.

The main chamber portion of the injector will allow 8 fuel streams to impinge upon 8 oxidizer streams (unlike impingement) for main chamber ignition. There are 8 fuel holes around the outer periphery of the injector which provide film cooling to the combustion chamber walls. There are 8 fuel holes around the premix chamber providing cooling to the premix chamber walls.

The injector contains a premix igniter, and the premix chamber contains a fuel and an oxidizer passage that impinge upon each other (unlike impingement) within the premix igniter chamber. The premix igniter chamber, along with the approximate 2-millisecond fuel lead, provides a smoother start transient primarily in the pulse mode of operation and especially in the area of minimum impulse.

2.5.2.3.3 Combustion Chamber.

The combustion chamber is constructed of unalloyed molybdenum which is coated with molybdenum disilicide to prevent oxidation of the base metal. Cooling of the chamber is by radiation and film cooling.

2.5.2.3.4 Nozzle Extension.

The nozzle extension is attached to the chamber by a waspolloy nut. The nozzle extension is machined from a cobalt base alloy (stainless steel). The stiffener rings are machined.

2.5.2.3.5 RCS Electrical Heaters.

Each of the RCS engine housings contains two electrical strip heaters. Each heater contains two electrical elements. Each heater element is controlled by a No. 2 therm-o-switch (figure 2.5-7). When the SM RCS HEATERS switch on MDC-2 for that quad is placed to PRI, 28 vdc is supplied to the No. 2 therm-o-switch. The therm-o-switch is set at a predetermined range and will automatically open or close because of the temperature range of the therm-o-switch and will control one element in each heater. When the SM RCS HEATERS switch on MDC-2 for that quad

is placed to SEC, 28 vdc is supplied to the redundant No. 2 therm-o-switch. The therm-o-switch is set at a predetermined range and will automatically open or close because of the temperature range of the therm-o-switch and will control the redundant element in each heater. The SM RCS HEATERS switches will normally be placed to PR1 at earth orbit acquisition and the SEC position is utilized as a backup.

The OFF position of the SM RCS HEATERS switch on MDC-2 removes power from the SM RCS heaters.

The SM RCS package temperature indicator on MDC-2 may be utilized to monitor the package temperature of any one of the four SM RCS quads by utilizing the SM positions A, B, C or D of the RCS INDICATORS select switch on MDC-2. The SM RCS package temperature transducers will also illuminate the SM RCS A, B, C or D caution and warning lights on MDC-2 if the package temperature becomes too low or too high.

2.5.2.4 Pressure Versus Temperature Measuring System.

The helium tank supply pressure and temperature for each quad is monitored by a pressure/temperature ratio transducer (figure 2.5-7).

The pressure/temperature ratio transducer for each quad provides a signal to the RCS indicator select switch on MDC-2. When the RCS indicator select switch on MDC-2 is positioned to a given SM RCS quad, the pressure/temperature ratio signal is transmitted to the propellant quantity gauge on MDC-2, and the propellant quantity remaining for that quad is indicated in percent.

The helium tank temperature for each quad is monitored by a helium tank temperature transducer. The helium tank temperature is monitored by TLM. The helium tank temperature can be monitored on MDC-2. The SM RCS He TK TEMP/PRPLNT QTY switch and the SM positions A, B, C, or D of the RCS indicators select switch on MDC-2 provides the crew with the capability to monitor either the helium tank temperature/pressure ratio as a percent quantity remaining, or helium tank temperature which can be compared against the helium supply pressure readout on MDC-2. With the use of a nomogram the propellant quantity remaining could be determined in percent through comparison of helium tank temperature and helium supply pressure.

2.5.2.5 Engine Thrusting Logic.

In the SM RCS, the main buses cannot supply electrical power to one leg of the AUTO RCS SELECT switches on MDC-8 and controller reaction jet ON-OFF assembly until the contacts of the RCS latching relay are

closed (figure 2.5-7). Closing of these contacts for SM RCS control may be initiated by the following signals:

a. With the launch escape tower jettisoned, and the translation control rotated counterclockwise, an SPS abort or S-IVB separation may be initiated and the following sequence of events occur:

1. Inform the CMC system of an abort initiation.
2. Initiate applicable booster shutdown.
3. Inhibit the pitch and yaw automatic jets of the controller jet ON-OFF assembly and provide a signal to SCS-SPS thrust ON-OFF logic.
4. Initiates an ullage maneuver signal to the required direct manual coils of the SM RCS engines (as long as the translation control is counterclockwise, ullage is terminated when the translation control is returned to the neutral detent).
5. Adapter separation occurs at 3.0 seconds after the above was initiated. In the event the automatic adapter separation did not occur, the CSM/LV SEPARATION pushbutton on MDC-1 can be pressed and held.
6. Energizes the RCS latching relay 3.8 seconds after the abort was initiated allowing the controller reaction jet ON-OFF assembly to provide electrical commands to the automatic coils of the SM RCS engines. If the sequential events control system logic fails to energize the RCS latching relay, the RCS CMD switch on MDC-2, placed to the RCS CMD position, provides a manual backup to the automatic function. In addition, if the CSM/LV SEPARATION pushbutton on MDC-1 is pressed and held for approximately 1 second the RCS latching relay is energized.

b. A normal S-IVB separation sequence may be initiated as follows: The RCS CMD switch on MDC-2 is placed to RCS CMD, enabling the controller reaction jet ON-OFF assembly to provide commands to the automatic coils of the SM RCS engines. Then positioning the translation control to +X (backup of DIRECT ULLAGE pushbutton on MDC-1) provides the signal required to the +X SM RCS engines; and the CSM/LV SEPARATION pushbutton on MDC-1 is held for 2 seconds to initiate adapter separation. (CSM/LV SEPARATION pushbutton on MDC-1 pressed and held for approximately 2 seconds will also energize the RCS latching relay.) The translation control is returned to neutral and the CSM/LV SEP pushbutton on MDC-1 is released.

In the event the translation control is unable to provide an ullage maneuver, the DIRECT ULLAGE pushbutton, on MDC-1, when pressed and held, provides the direct ullage signal to the direct manual coils of the required SM RCS engines providing a +X translation. This provides a manual direct backup to the translation control for the ullage maneuver. The ullage maneuver is terminated upon release of the DIRECT ULLAGE pushbutton.

In the event the controller reaction jet ON-OFF assembly is unable to provide commands to the automatic coils of the SM RCS engines, a backup method is provided. This method consists of two ROT CONT PWR DIRECT RCS switches on MDC-1 and the two rotation controllers. The ROT CONT PWR DIRECT RCS 1 switch supplies power only to rotation control 1. When the ROT CONT PWR DIRECT RCS 1 switch, is positioned to MNA/MNB, main buses A and B supply power only to rotation control 1. When the ROT CONT PWR DIRECT RCS 1 switch is positioned to MNA, main bus A supplies power only to rotation control 1. The ROT CONT PWR DIRECT RCS 2 switch supplies power only to rotation control 2. When the ROT CONT PWR DIRECT RCS 2 switch is positioned to MNA/MNB, main buses A and B supply power only to rotation control 2. When the ROT CONT PWR DIRECT RCS 2 switch is positioned to MNB, main bus B supplies power only to rotation control 2. When the rotation control is positioned fully to its stops in any direction, the rotation control will energize the required direct manual coils for the desired maneuver and provide an inhibit signal to the SM RCS automatic coils.

If the controller reaction jet ON-OFF assembly is unable to provide commands to the automatic coils of the SM RCS engines, it is noted that translation control of the spacecraft is disabled.

2.5.3 SM RCS PERFORMANCE AND DESIGN DATA.

2.5.3.1 Design Data.

The following list is the design data on the SM RCS components.

Helium Tanks (4)	4150±50 psig at 70±5°F during servicing. After servicing setting on launch pad is 70±10°F, capacity 1.35 lb. Internal volume of 910±5 cubic inches. Wall thickness, 0.135 inch. Weight 11.5 lb, diameter 12.37 in.
Regulator Units (8)	Primary 181±3 psig with a normal lockup of 183±5 psig. Secondary lockup of 187±5 psig. From lockup pressure not to drop below 182 psig or rise above 188 psig. Filter 25 microns nominal, 40 microns absolute at inlet of each regulator unit.

Secondary Fuel Pressure Transducers (4)	Illuminate caution and warning light on MDC-2 (SM RCS A, B, C, or D): Underpressure 145 psia nominal. Overpressure 215 psia nominal.
Check Valve-Filters	40 microns nominal, 74 microns absolute. One at inlet to check valve assembly, one at each test port.
Helium Relief Valves (8)	Diaphragm rupture at 228±8 psig, filter 10 microns nominal, 25 microns absolute. Relief valve relieves at 236.5±11.5 psig, reseats at not less than 220 psig. Flow capacity 0.3 lb/minute at 248 psig at 60°F. Bleed device closes when increasing pressure reaches no more than 179 psig in the cavity and a helium flow of less than 20 standard cubic centimeters per hour across the bleed device and relief valve assembly combined. The bleed device reopens when decreasing pressure has reached no less than 20 psig.
Primary Fuel Tank (4)	Combined propellant and ullage volume of 69.1 lb, initially at 65°F at 150 psig, resulting in a tank pressure of no more than 215 psia when heated to 85°F. Outside diameter 12.62 in. maximum. Length 23.717 (+0.060, -0.000) in. Wall thickness 0.017 to 0.022 in. Helium inlet port 1/4 in.; fill and drain port 1/2 in.
Primary Oxidizer Tank (4)	Combined propellant and ullage volume of 137.0 lb, initially at 65°F at 150 psig, resulting in a tank pressure of no more than 215 psia when heated to 85°F. Outside diameter 12.62 in. maximum, length 28.558 (+0.060, -0.000) in. Wall thickness 0.017 to 0.022 in.

Secondary Fuel Tank (4)	Combined propellant and ullage volume of 45.2 lb, initially at 65°F at 150 psig, resulting in a tank pressure of no more than 205 psia when heated to 105°F. Outside diameter 12.62 in. maximum, length 17.329 (+0.040, -0.000) in. Wall thickness 0.022 to 0.027 in.
Secondary Oxidizer Tank (4)	Combined propellant and ullage volume of 89.2 lb, initially at 65°F at 150 psig, resulting in a tank pressure of no more than 205 psia when heated to 105°F. Outside diameter 12.65 in. maximum, length 19.907 (+0.040, -0.000) in. Wall thickness 0.022 to 0.027 in.
Inline Filters (8)	5 microns nominal, 15 microns absolute.
Engine (16)	1000-second service life, 750 seconds continuous, capable of 10,000 operational cycles. Expansion ratio 40 to 1 at nozzle exit. Cooling-film and radiation, injector-type premix ignitor, one on one unlike impingement, 8 fuel annulus for film cooling of premix ignitor, main chamber 8 on 8 unlike impingement, 8 fuel for film cooling of combustion chamber wall. Nozzle exit diameter - 5.6 inches Fuel lead Automatic coils - connected in parallel Manual coils - connected in series Weight - 4.99 lb Length - 13.400 in. maximum
Filters - each injector valve inlet	100 microns nominal, 250 microns absolute
Package Temperature Transducer (4)	Illuminate caution and warning light on MDC-2 (SM RCS A, B, C, or D): Below temperature of 75°F nominal. Above temperature of 205°F nominal.

Heater Therm-O-Switch	#2
	Close at 115°F
	Open at 134°F
	Minimum spread 9°F
	36±3.6 watts per element nominal two per quad.

2.5.3.2 Performance Data.

Refer to CSM/LM Spacecraft Operational Data Book SNA-8-B-027 CSM (SD 68-447).

2.5.3.3 SM RCS Electrical Power Distribution.

See figure 2.5-10 for electrical power distribution.

2.5.4 SM RCS OPERATIONAL LIMITATIONS AND RESTRICTIONS.

Refer to Volume 2, AOH malfunction procedures.

2.5.5 CM RCS FUNCTIONAL DESCRIPTION.

The command module reaction control subsystems provide the impulses required for controlling spacecraft rates and attitude during the terminal phase of a mission.

The subsystems may be activated by the CM-SM SEPARATION switches on MDC-2 placed to CM-SM SEPARATION position, or by placing the CM RCS PRESSURIZE switch on MDC-2 to the CM RCS PRESS position. The subsystems are activated automatically in the event of an abort from the pad up to launch escape tower jettison. Separation of the two modules occurs prior to entry (normal mode), or during an abort from the pad up to launch escape tower jettison.

The CM RCS consists of two similar and independent subsystems, identified as subsystem 1 and subsystem 2. Both subsystems are pressurized simultaneously. In the event a malfunction develops in one subsystem, the remaining subsystem has the capability of providing the impulse required to perform necessary pre-entry and entry maneuvers. The CM RCS is contained entirely within the CM and each reaction engine nozzle is ported through the CM skin. The propellants consist of inhibited nitrogen tetroxide (N_2O_4) used as the oxidizer and monomethylhydrazine (MMH) used as fuel. Pressurized helium gas is the propellant transferring agent.

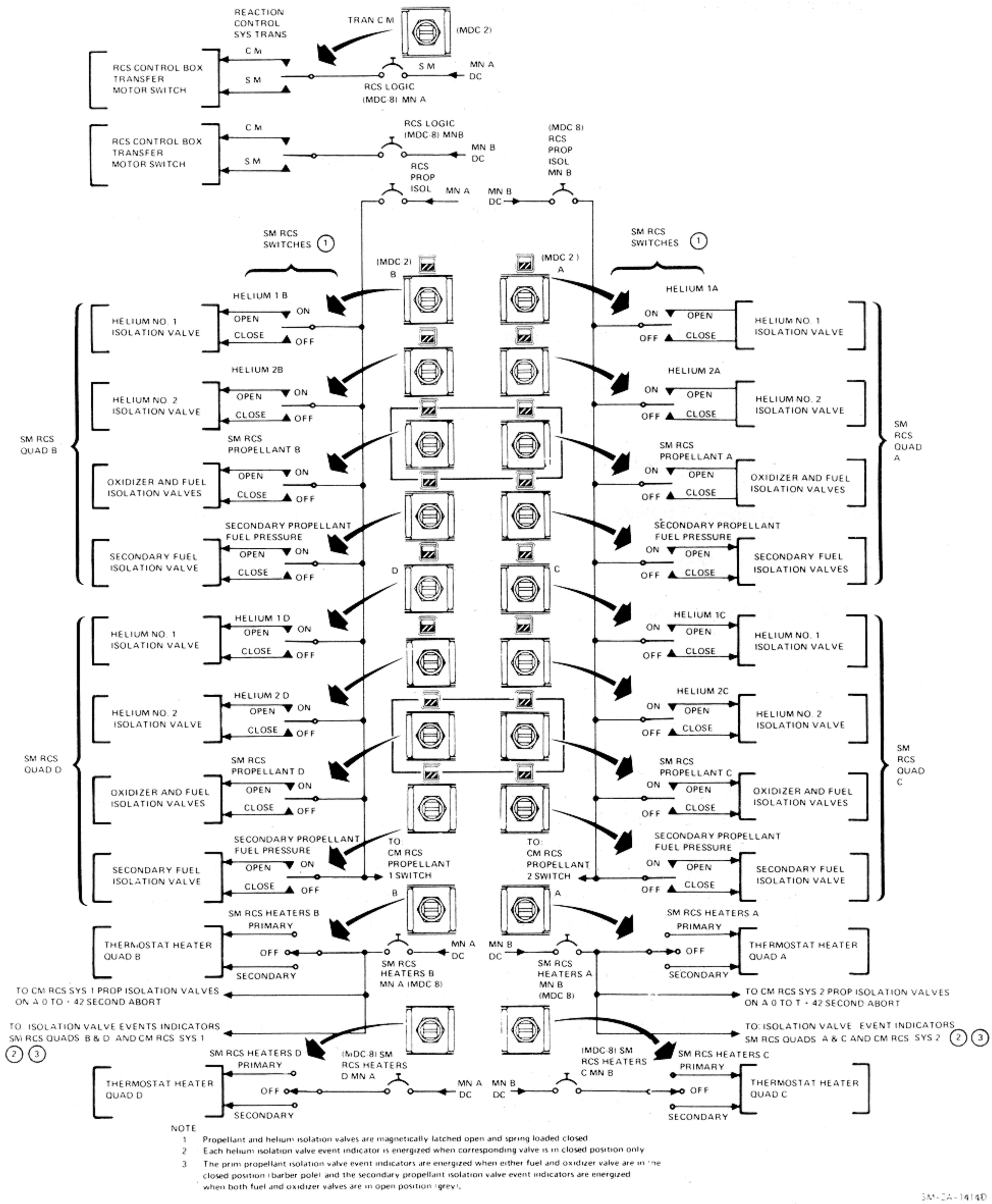

Figure 2.5-10. SM RCS Electrical Power Distribution

The reaction jets may be pulse-fired, producing short thrust impulses or continuously fired, producing a steady state thrust level. CM attitude control is maintained by utilizing the applicable pitch, yaw and roll engines of subsystems 1 and 2. However, complete attitude control can be maintained with only one subsystem.

A functional flow diagram of CM RCS subsystems 1 and 2 is shown in figure 2.5-11. The helium storage vessel of each subsystem supplies pressure to two helium isolation squib valves that are closed throughout the mission until either the CM SM Separation switch on MDC-2, or CM RCS PRESS switch on MDC-2 is activated. When the helium isolation squib valves in a subsystem are initiated open, this allows the helium tank source pressure to the pressure regulators downstream of each helium isolation squib valve. The regulators reduce the high-pressure helium to a desired working pressure.

Regulated helium pressure is directed through series-parallel check valves. The check valves permit helium pressure to the fuel and oxidizer tanks and prevent reverse flow of propellant vapors or liquids. A pressure relief valve is installed in the pressure lines between the check valves and propellant tanks to protect the propellant tanks from any excessive pressure.

Helium entering the propellant tanks creates a pressure buildup around the propellant positive expulsion bladders, forcing the propellants to be expelled into the propellant distribution lines. Propellants then flow to valve isolation burst diaphragms, which rupture due to the pressurization, and then through the propellant isolation valves. Each subsystem supplies fuel and oxidizer to six engines.

Oxidizer and fuel is distributed to the 12 engines by a parallel feed system. The fuel and oxidizer engine injector valves, on each engine, contain orifices which meter the propellant flow to obtain a nominal 2.1 oxidizer/fuel ratio by weight. The oxidizer and fuel ignite due to the hypergolic reaction. The engine injector valves are controlled automatically by the controller reaction jet ON-OFF assembly. Manual direct control is provided for rotational maneuvers, and the engine injector valves are spring-loaded closed.

CM RCS engine preheating may be necessary before initiating pressurization due to possible freezing of the oxidizer (+11.8°F) upon contact with the engine injector valves. The crew will monitor the engine temperatures and determine if preheating is required by utilizing the engine injector valve solenoids direct manual coils for preheat until acceptable engine temperatures are obtained. The CM RCS HTRS switch, on MDC-101, will be utilized to apply power to the engine injector valve direct manual coils for engine preheating.

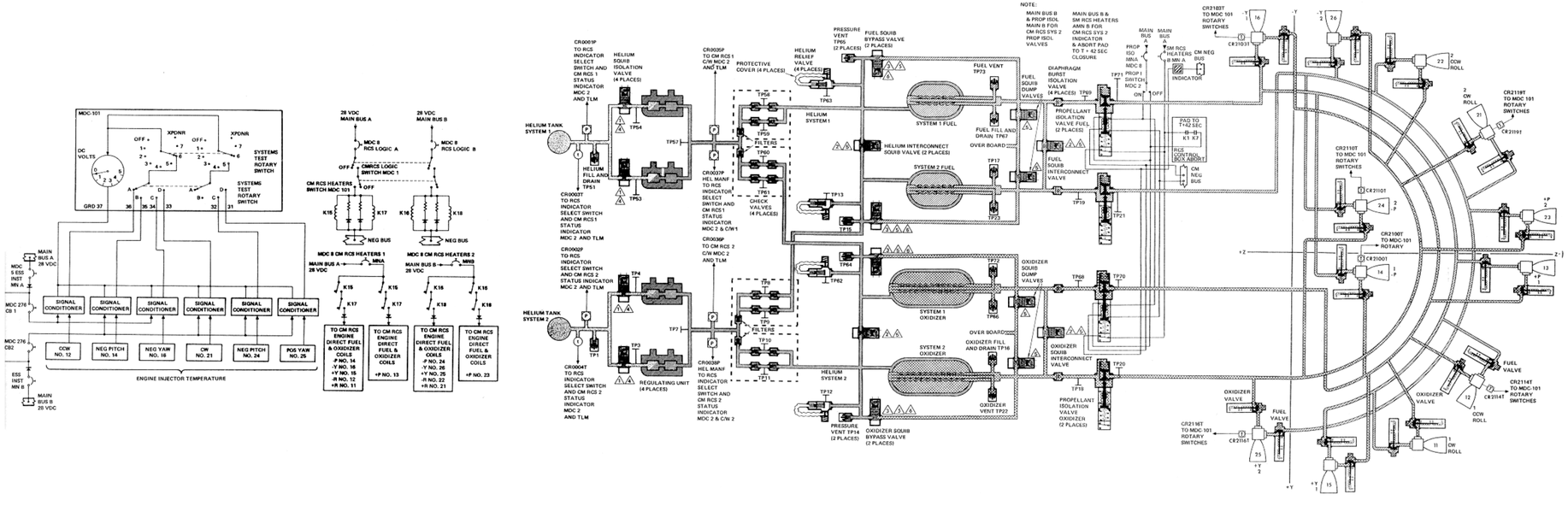

PHASE	SEQUENCE	SQUIB VALVE INDICATION (TOTAL: 16 VALVES)								
		HELIUM ISOLATION (4)	FUEL SIDE HELIUM INTERCONNECT (1)	OXIDIZER SIDE HELIUM INTERCONNECT (1)	FUEL INTERCONNECT (1)	OXIDIZER INTERCONNECT (1)	FUEL TANK BYPASS (2)	OXIDIZER TANK BYPASS (2)	OXIDIZER DUMP (2)	FUEL DUMP (2)
NORMAL ENTRY	1. PRIOR TO CM SM SEPARATION	1 / NORMAL OR BACKUP OPEN OR NORMAL 4								
	2. MAIN PARACHUTE LINE STRETCH		2	2	2	2				
	3. AFTER PROPELLANT DEPLETION						3 / NORMAL BACKUP 4	3 / NORMAL BACKUP 4		
ABORT PAD TO T + 42 SECONDS	1. SIMULTANEOUS WITH EDS OR MANUAL ABORT INITIATION	1 / NORMAL BACKUP 4	2	2	2	2			2	
	2. ABORT INITIATION PLUS 5 SECONDS.									2
	3. 13 SECONDS AFTER FUEL DUMP INITIATION						2	2		
ABORT AFTER T + 42 SECONDS	1. SIMULTANEOUS WITH EDS OR MANUAL ABORT INITIATION.	1 / NORMAL BACKUP 4								
	2. MAIN PARACHUTE LINE STRETCH		2	2	2	2				
	3. AFTER PROPELLANT DEPLETION						3 / NORMAL BACKUP 4	3 / NORMAL BACKUP 4		
ALL SPS ABORTS	SAME AS NORMAL ENTRY									

HELIUM
OXIDIZER
FUEL
P PRESSURE TRANSDUCER
T TEMPERATURE TRANSDUCER
C/W CAUTION AND WARNING

CM RCS FUNCTIONAL FLOW
CSM 104 AND SUBS

LEGEND FOR SQUIB VALVE ACTUATION
1 CM RCS PRESSURIZE, SWITCH MDC 2
2 CM PROPELLANT DUMP SWITCH MDC 1
3 CM PROPELLANT PURGE SWITCH MDC 1
4 AUTOMATIC (CM SM SEPARATION)
4 AUTOMATIC (RCS CONTROL BOX)
4 CM RCS HELIUM DUMP PUSHBUTTON, MDC 1

SM-2A-12R3R

RCS

Figure 2.5-11. CM RCS Functional Flow

Since the presence of hypergolic propellants can be hazardous upon CM impact, the remaining propellants are burned or dumped and purged with helium in addition to depleting the helium source pressure prior to CM impact.

In the event of an abort from the pad up to T + 42 seconds after lift-off, provisions have been incorporated to automatically dump the oxidizer and fuel supply overboard. Then, followed by a helium purge of the fuel and oxidizer systems in addition to depleting the helium source pressure.

2.5.6 CM RCS MAJOR COMPONENTS/SUBSYSTEMS DESCRIPTION.

The CM RCS is composed of two separate, normally independent subsystems, designated subsystem 1 and subsystem 2. The subsystems are identical in operation, each containing the following four major subsystems:

- Pressurization
- Propellant
- Rocket engine
- Temperature control system heaters.

2.5.6.1 Pressurization Subsystem.

This subsystem consists of a helium supply tank, two dual pressure regulator assemblies, two check valve assemblies, two pressure relief valve assemblies, and associated distribution plumbing.

2.5.6.1.1 Helium Supply Tank.

The total high-pressure helium is contained within a single spherical storage tank for each subsystem. Initial fill pressure is 4150±50 psig.

2.5.6.1.2 Helium Isolation (Squib-Operated) Valve.

The two squib-operated helium isolation valves are installed in the plumbing from each helium tank to confine the helium into as small an area as possible. This reduces helium leakage during the period the system is not in use. Two squib valves are employed in each system to assure pressurization. The valves are opened by closure of the CM RCS PRESS switch on MDC-2 to CM RCS PRESS, or by placing the CM/SM SEP switches on MDC-2 to CM/SM SEP, or upon the receipt of an abort signal from the pad up to the launch escape tower jettison.

2.5.6.1.3 Helium Pressure Regulator Assembly.

The pressure regulators used in the CM RCS subsystems 1 and 2 are similar in type, operation, and function to those used in the SM RCS.

The difference is that the regulators in the CM RCS are set at a higher pressure than those of the SM RCS.

2.5.6.1.4 Helium Check Valve Assembly.

The check valve assemblies used in CM RCS subsystems 1 and 2 are identical in type, operation, and function to those used in the SM RCS.

2.5.6.1.5 Helium Relief Valve.

The helium relief valves used in the CM RCS subsystems 1 and 2 are similar in type, operation, and function to those used in the SM RCS.

The difference being the rupture pressure of the burst diaphragm in the CM RCS is higher than that of the SM RCS and the relief valve relieves at a higher pressure in the CM RCS than that of the SM RCS.

2.5.6.1.6 Distribution Plumbing.

Brazed joint tubing is used to distribute regulated helium in each subsystem from the helium storage vessels to the propellant tanks.

2.5.6.2 Propellant Subsystem.

Each subsystem consists of one oxidizer tank, one fuel tank, oxidizer and fuel isolation valves, oxidizer and fuel burst diaphragm isolation valves, and associated distribution plumbing.

2.5.6.2.1 Oxidizer Tank.

The oxidizer supply is contained in a single titanium alloy, hemispherical-domed cylindrical tank in each subsystem. Each tank contains a diffuser tube assembly and a teflon bladder for positive expulsion of the oxidizer similar to that of the SM RCS secondary tank assemblies. The bladder is attached to the diffuser tube at each end of the tank. The diffuser tube acts as the propellant outlet.

When the tank is pressurized, the helium gas surrounds the entire bladder, exerting a force which causes the bladder to collapse about the propellant, forcing the oxidizer into the diffuser tube assembly and on out of the tank outlet into the manifold.

2.5.6.2.2 Fuel Tank.

The fuel supply is contained in a single titanium alloy, hemispherical-domed cylindrical tank in each subsystem that is similar in material construction and operation to that of the SM RCS secondary fuel tanks.

2.5.6.2.3 Diaphragm Burst Isolation Valve.

The burst diaphragms, downstream from each tank are installed to confine the propellants into as small an area as possible throughout the mission. This is to prevent loss of propellants in the event of line rupture downstream of the burst diaphragm of engine injector valve leakage.

When the helium isolation squib valves are initiated open, regulated helium pressure pressurizes the propellant tanks creating the positive expulsion of propellants into the respective manifolds to the burst diaphragms which rupture and allow the propellants to flow on through the burst diaphragm and the propellant isolation valves to the injector valves on each engine. The diaphragm is of the nonfragmentation type, but in the event of any fragmentation, a filter is incorporated to prevent any fragments from entering the engine injector valves.

2.5.6.2.4 Propellant Isolation Shutoff Valves.

When the burst diaphragm isolation valves are ruptured, the propellants flow to the propellant isolation valves.

The fuel and oxidizer isolation valves in the SYS 1 fuel and oxidizer lines are both controlled by the CM RCS PRPLNT 1 switch on MDC-2. The fuel and oxidizer isolation valves in the SYS 2 fuel and oxidizer lines are both controlled by the CM RCS PRPLNT 2 switch on MDC-2. Each propellant isolation valve contains two solenoids, one that is energized momentarily to magnetically latch the valve open, and the remaining solenoid is energized momentarily to unlatch the magnetic latch and spring pressure and propellant pressure close the valve. The CM RCS PROPELLANT switch on MDC-2 is placed to ON energizing the valve into the magnetic latch (open), the OFF position energizes the valve to unlatch the magnetic latch (closed). The center position removes electrical power from either solenoid. The valves are normally open in respect to the fluid flow.

Each valve contains a position switch which is in parallel to one position indicator above the switch on MDC-2 that controls both valves.

When the position switch in each valve is open, the indicator on MDC-2 is gray (same color as the panel) indicating that the valves are in the normal position, providing a positive open valve indication. When the position switch in either valve is closed, the indicator on MDC-2 is barber pole (diagonal lines) indicating that either valve, or both valves, are closed.

The valves are closed in the event of a failure downstream of the valves, line rupture, run away thruster, etc.

2.5.6.2.5 Distribution Plumbing.

Brazed joint tubing is used to distribute regulated helium to the propellant positive expulsion tanks in subsystems 1 and 2. The distribution

lines contain 16 explosive-operated (squib) valves which permit changing the helium and propellant distribution configuration to accomplish various functions within the CM RCS. Each squib valve is actuated by an explosive charge, detonated by an electrical hot-wire ignitor. After ignition of the explosive device, the valve remains open permanently. Two squib valves are utilized in each subsystem to isolate the high-pressure helium supply until RCS pressurization is initiated. Two squib valves are utilized to interconnect subsystems 1 and 2 regulated helium supply which ensures pressurization of both subsystems during dump-burn and helium purge operations. Two squib valves in each subsystem permit helium gas to bypass the propellant tanks which allow helium purging of the propellant subsystem and depletion of the helium source pressure. One squib valve in the oxidizer system permits both oxidizer systems to become common. One squib in the fuel system permits both fuel systems to become common. Two squib valves in the oxidizer system, and two in the fuel system are utilized to dump the respective propellant in the event of an abort from the pad up to T +42 seconds

2.5.6.3 Engine Assembly.

The command module reaction control subsystem engines are ablative-cooled, bi-propellant thrust generators which can be operated in either the pulse mode or the steady-state mode.

Each engine has a fuel and oxidizer injector solenoid valve. The injector solenoid control valves control the flow of propellants by responding to electrical commands generated by the controller reaction jet ON-OFF assembly or by the direct manual mode. Each engine contains an injector head assembly which directs the flow of each propellant from the engine injector valves to the combustion chamber where the propellants atomize and ignite (hypergolic), producing thrust. Estimated engine thrust rise and decay is shown in figure 2.5-12.

2.5.6.3.1 Propellant Solenoid Injector Control Valves (Fuel and Oxidizer).

The injector valves utilize two coaxially wound coils, one for automatic and one for direct manual control. The automatic coil is used when the thrust command originates from the controller reaction jet ON-OFF assembly.

The direct manual coils are used when the thrust command originates at the rotation control (direct RCS).

The engine injector valves are spring-loaded closed and energized open.

The reaction time of the valves, pulse mode of operation, reason for pulse mode, and thrust curve generated by the engine is similar to the SM RCS engines.

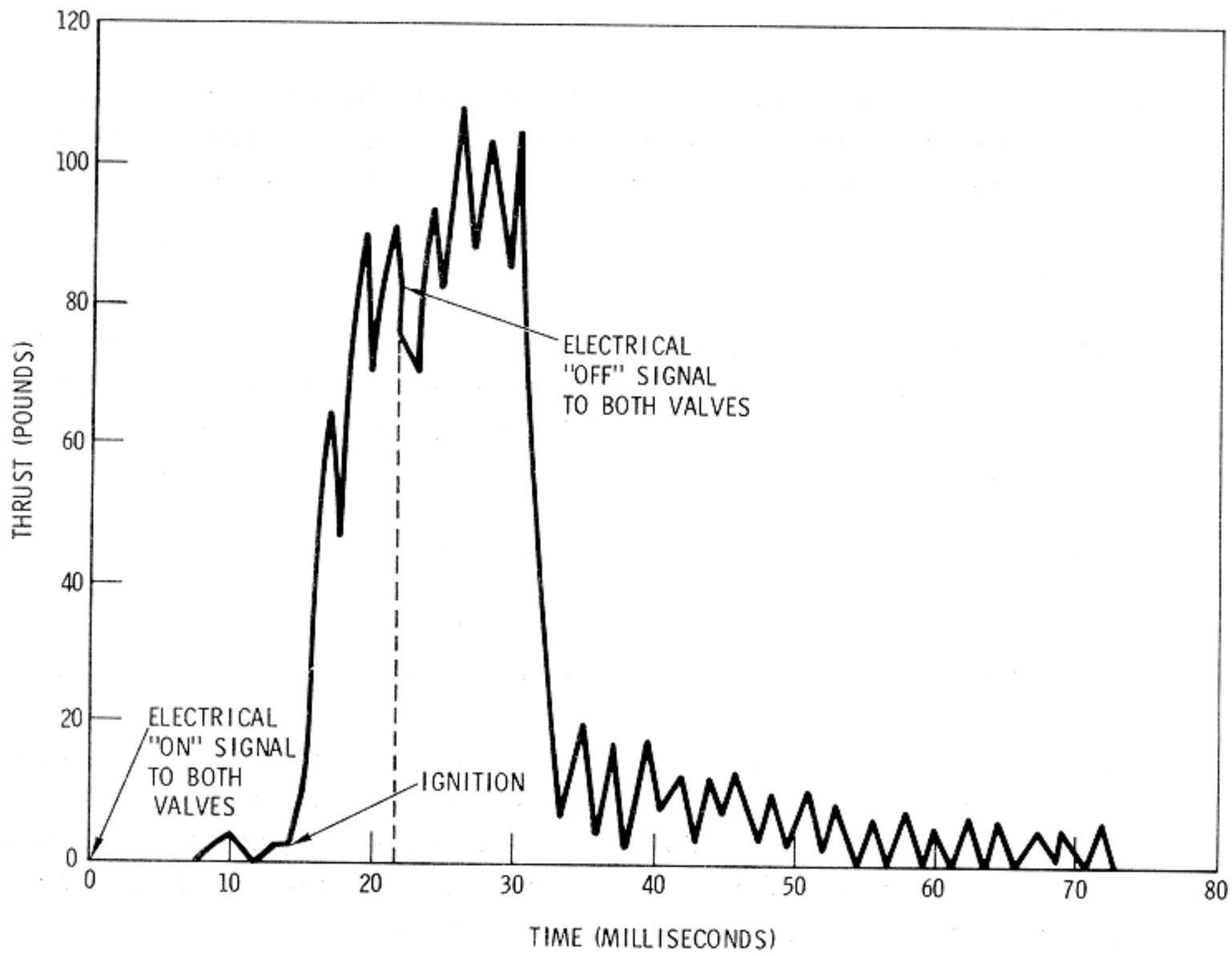

P-7031

Figure 2.5-12. CM RCS Engine Thrust Rise and Decay Time

The automatic coils in the fuel and oxidizer injector valves are connected in parallel from the controller reaction jet ON-OFF assembly.

The direct manual coils in the fuel and oxidizer injector valves provide a direct backup to the automatic system. The direct manual coils are connected in parallel from the rotation controls.

The engine injector valve automatic coil opening time is 8±1/2 milliseconds, and closing is 6±1/2 milliseconds. The engine injector valve direct manual coil opening time is 16±3 milliseconds and closing time is 7±3 milliseconds.

2.5.6.3.2 Injector.

The injector contains 16 fuel and 16 oxidizer passages that impinge (unlike impingement) upon a splash plate within the combustion chamber. Therefore, the injector pattern is referred to as an unlike impingement splash-plate injector.

2.5.6.3.3 Thrust Chamber Assembly.

The thrust chamber assembly is fabricated in four segments, the combustion chamber ablative sleeve, throat insert, ablative material, asbestos and a fiberglass wrap. The engine is ablative-cooled.

2.5.6.3.4 Nozzle Extension.

The CM RCS engines are mounted within the structure of the CM. The nozzle extensions are required to transmit the gasses from the engine out through the structure of the CM. The nozzle extensions are fabricated of ablative material.

2.5.6.3.5 Engine Solenoid Injector Temperature-Control System.

A temperature-control system of the CM RCS engine is employed by energizing the manual direct coils on each engine (figure 2.5-11).

Temperature sensors are mounted on 6 of the 12 engine injectors. A temperature sensor is installed on the subsystem 1 counterclockwise roll-engine injector, negative yaw-engine injector, negative pitch-engine injector, and on subsystem 2 positive yaw-engine injector, negative pitch-engine injector, and clockwise roll-engine injector.

The temperature transducers have a range from -50° to +50°F. The temperature transducers from the three subsystems 1 and 2 engine injectors provide inputs to the two rotary switches on MDC-101, which are located in the lower equipment bay of the command module. With the rotary switches positioned as illustrated in figure 2.5-11, the specific engine injector temperature is monitored as d-c voltage on the 0- to 5-vdc voltmeter on MDC-101. The 0 vdc is equivalent to -50°F and 5 vdc is equivalent to +50°F.

A CM RCS HEATER switch located on MDC-101 (figure 2.5-11) is placed to the CM RCS HTR position when any one of the instrumented engines are below +28°F (3.9 vdc). The CM RCS LOGIC switch, on MDC-1, must be positioned to CM RCS LOGIC to provide electrical power to the CM RCS HTR switch on MDC-101. When the CM RCS HTR switch is positioned to CM RCS HTRS, relays are energized, which allow electrical power to be provided from the CM HEATERS circuit breakers 1 MNA and 2 MNB on MDC-8, to the direct injector solenoid control valves of the 12 CM RCS engines. The fuel and oxidizer injector solenoid control valve direct coils (of all 12 CM RCS engines) are energized open prior to the pressurization of CM RCS subsystems 1 and 2. A 20-minute maximum heat-up time assures engine injector temperature is at -10°F minimum. At the end of 20 minutes, the CM RCS HTR switch on MDC-101 is positioned to OFF, allowing the injector solenoid control valve direct

coils to de-energize, and the injector solenoid control valves spring-load closed. This will prevent the oxidizer from freezing at the engine injector valves upon pressurization of subsystems 1 and 2 and the 20-minute time factor ensures that the warmer engines will not be overheated.

The CM RCS HEATER switch must be placed to OFF prior to CM RCS pressurization.

The operation of the CM RCS HEATER switch in conjunction with the d-c voltmeter and/or heating time insures all other engine valves reach the acceptable temperature levels.

If the CM RCS HEATER switch on MDC-101 fails to energize the direct coils for the CM RCS preheat, the following backup procedure may be utilized:

a. Place CM RCS HEATER switch on MDC-101 to OFF.
b. Place ROTATION CONTROL POWER DIRECT RCS switch 1 and 2 on MDC-1 to OFF.
c. Place RCS TRANSFER switch on MDC-2 to CM.
d. Place SC CONT switch on MDC-1 to SCS.
e. Place MANUAL ATTITUDE PITCH, YAW, and ROLL switches on MDC-1 to ACCEL CMD.
f. Place A/C ROLL AUTO RCS SELECT switches on MDC-8 to OFF.
g. Place ROTATION HAND CONTROLS to soft stops for 10 minutes.
h. If a CM RCS engine temperature that is monitored on MDC-101 fails to increase because of a CM RCS engine direct coils failure, follow above steps a through f, and then place ROTATION HAND CONTROL(S) to soft stop(s) of affected engine for 10 minutes.

2.5.6.3.6 Engine Thrust ON-OFF Logic.

All automatic thrust commands for CM attitude are generated from within the controller reaction jet ON-OFF assembly. These commands may originate at:

- The rotation controls
- The stabilization and control subsystem
- The command module computer.

In the event the controller reaction jet ON-OFF assembly is unable to provide commands to the automatic coils of the SM RCS engines, a backup method is provided. The backup method consists of two ROT CONT PWR DIRECT RCS switches on MDC-1 and the two rotation controllers. The ROT CONT PWR DIRECT RCS 1 switch supplies power only to rotation control 1. When the ROT CONT PWR DIRECT RCS 1 switch, is positioned to MNA/MNB, main buses A and B supply power only to rotation control 1. When the ROT CONT PWR DIRECT RCS 1 switch

is positioned to MNA, main bus A supplies power only to rotation control 1. The ROT CONT PWR DIRECT RCS 2 switch supplies power only to rotation control 2. When the ROT CONT PWR DIRECT RCS 2 switch is positioned to MNA/MB, main buses A and B supply power only to rotation control 2. When the ROT CONT PWR DIRECT RCS 2 switch is positioned to MNB, main bus B supplies power only to rotation control 2. When the rotation control is positioned fully to its stops in any direction, the required direct manual coils are energized for the desired maneuver.

When the CM/SM SEP switches on MDC-2 are placed to CM SM SEP position, the switches automatically energize relays in the RCS control box (figure 2.5-7) (providing the CM RCS LOGIC switch on MDC-1 is at CM RCS LOGIC) that transfer the controller reaction jet ON-OFF assembly, and direct manual inputs from the SM RCS engine to the CM RCS engines automatically. These same functions occur automatically on any LES ABORT also, providing the CM RCS LOGIC switch on MDC-1 is at CM RCS LOGIC.

The transfer motors in the RCS control box are redundant to each other in that they ensure the direct manual inputs are transferred from the SM RCS engines to the CM RCS engines in addition to providing a positive deadface.

The RCS transfer motors may also be activated by the RCS TRANSFER switch placed to CM position on MDC-2 which provides a manual backup to the automatic transfer. The CM RCS LOGIC switch on MDC-1 does not have to be on for the manual backup transfer function.

As an example, in the case of the direct manual inputs only to the RCS engines: If the electrical A RCS transfer motor failed to transfer automatically at CM/SM SEP (providing the CM RCS LOGIC switch on MDC-1 is at CM RCS LOGIC); or by use of the manual RCS transfer switch on MDC-2, the electrical B RCS transfer motor would transfer the direct manual inputs from the SM RCS engines to the CM RCS engines in addition to a positive deadfacing to the SM RCS engines.

The CM RCS subsystems 1 and 2 may be checked out prior to CM/SM separation by utilization of the RCS transfer switch on MDC-2. Placing the RCS TRANSFER switch to the CM position, the controller reaction jet ON-OFF assembly and direct manual inputs are transferred to the CM permitting a CM RCS checkout prior to CM/SM separation.

2.5.6.4 Propellant Jettison.

There are two sequences of propellant jettison. One sequence is employed in the event of an abort while the vehicle is on the launch pad and through the first 42 seconds of flight. The second sequence is employed for all other conditions, whether it be a normal entry or an SPS abort mode of operation.

The sequence of events before and during a normal entry is as follows:

a. The CM RCS is pressurized by placing the CM/SM SEP switches on MDC-2 to CM/SM SEP position or by placing the CM RCS PRESS switch on MDC-2 to the CM RCS PRESS position prior to initiating CM-SM separation. The CM RCS PRESS switch or the CM-SM SEP switches initiate the helium isolation squib valves in CM RCS subsystems 1 and 2, thus pressurizing both subsystems (figures 2.5-11 and 2.5-13). The CM RCS LOGIC switch on MDC-1 must be placed to CM RCS LOGIC prior to initiating CM/SM separation to provide the automatic RCS transfer function.

b. The CM RCS provides attitude control during entry. At approximately 24,000 feet, a barometric switch is activated unlatching the RCS latching relay. This inhibits any further commands from the controller reaction jet ON-OFF assembly (providing the ELS LOGIC switch on MDC-1 is in AUTO) (figure 2.5-7). The RCS CMD switch MDC-2, positioned to OFF momentarily provides a manual backup to the 24,000 feet barometric switches.

c. At approximately main parachute line stretch as a normal manual function, the CM RCS PRPLNT-DUMP switch on MDC-1 is placed to the DUMP position. This function initiates the following simultaneously; (CM RCS LOGIC switch on MDC-1 must be placed to CM RCS LOGIC to provide electrical power to the DUMP switch). (See figures 2.5-11 and 2.5-13.)

1. Initiates the two helium interconnect squib valves.
2. Initiates the fuel interconnect squib valves.
3. Initiates the oxidizer interconnect squib valve.
4. The fuel and oxidizer injector valve direct manual coils are energized on all of the CM RCS engines excluding the two + pitch engines. The propellants are jettisoned by burning the propellants remaining through 10 of the 12 engines. The length of time to burn the remaining propellants will vary, depending upon the amount of propellants remaining in the fuel and oxidizer tanks at 24,000 feet. If an entire propellant load remained, as an example, a nominal burn time would be 88 seconds through 10 of the 12 engines. In the worst case of only 5 of the 12 engines (direct manual coils energized), a nominal burn time would be 155 seconds.

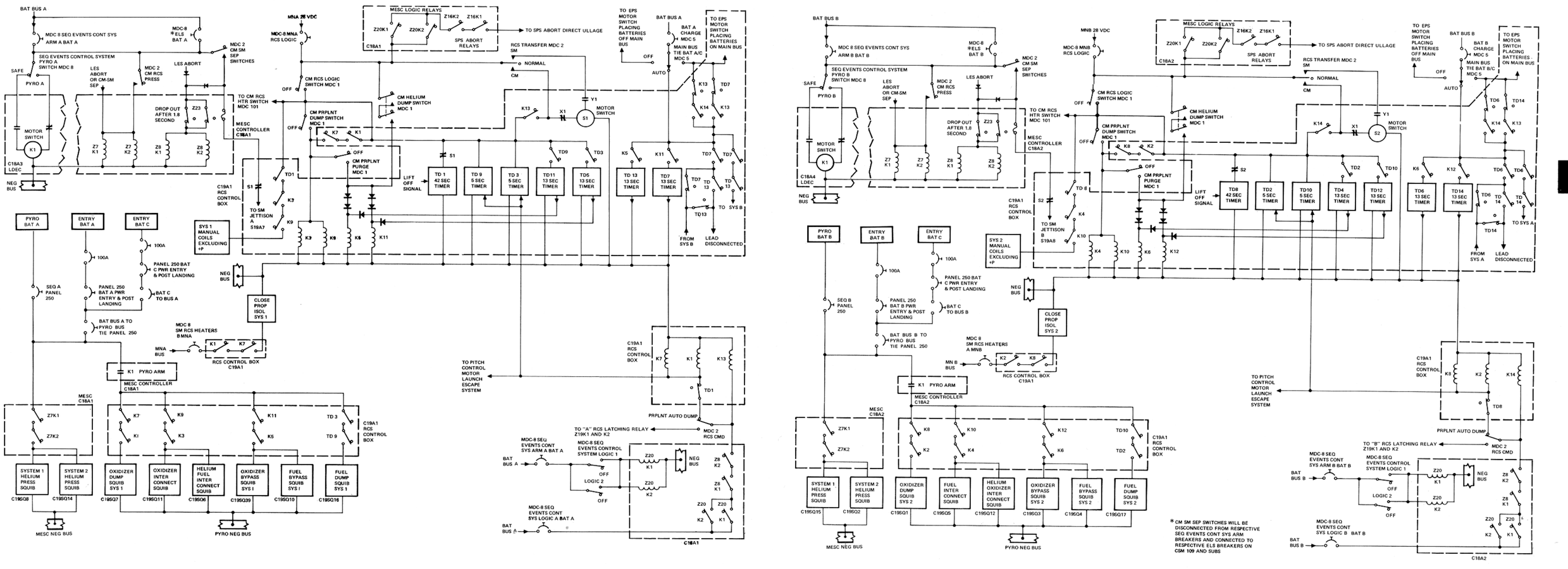

Figure 2.5-13. CM RCS Squib Valve Power Control Diagram

RCS

d. Upon completion of propellant burn, the CM PRPLNT PURGE switch on MDC-1 is placed to the PURGE position as a normal manual function (the CM PRPLNT-DUMP switch supplies electrical power when placed to DUMP position to the PURGE switch). When the PURGE switch is placed to PURGE, the switch initiates the four helium bypass squib valves. This allows the regulated helium pressure to bypass each fuel and oxidizer tank, purging the lines and manifolds out through 10 of the 12 engines, as well as depleting the helium source pressure. Purging requires approximately 15 seconds (until helium depletion).

e. In the event of a CM RCS LOGIC switch and/or CM PRPLNT DUMP switch failure on MDC-1, the remaining propellants may be burned by placing ROT CONT PWR DIRECT RCS switch 1 on MDC-1, to either MNA/MNB or MNA, and/or ROT CONT PWR DIRECT RCS switch 2 on MDC-1, to either MNA/MNB or MNB. Then positioning the two rotation controllers to CCW, CW, -Y, +Y and -P (excluding +P) position. This will energize the direct fuel and oxidizer injector solenoid valve coils of ten of the twelve CM RCS engines and burn the remaining propellants. At the completion of propellant burn the CM RCS HELIUM DUMP pushbutton on MDC-1 would be pressed initiating the four bypass squib valves. This allows the regulated helium pressure to bypass each fuel and oxidizer tank. This purges the lines and manifolds out through ten of the twelve engines as well as depleting the helium source pressure providing the two rotation controllers are positioned to CCW, CW, -Y, and -P (excluding +P).

f. In the event the CM RCS LOGIC and CM PRPLNT DUMP switches on MDC-1 function correctly and the PURGE switch fails, the CM RCS HELIUM DUMP pushbutton on MDC-1 would be pressed, initiating the four helium bypass squib valves, allowing the regulated helium pressure to bypass around each fuel and oxidizer tank, purging the lines and manifolds out through 10 of the 12 engines as well as depleting the helium source pressure.

g. Upon completion of purging, the direct manual coils of the CM RCS engine injector valves will be de-energized by placing the CM RCS LOGIC switch on MDC-1 to OFF, or by placing the CM PRPLNT DUMP switch on MDC-1 to OFF. The CM RCS 1 and 2 PRPLNT switches on MDC-2 will also be placed to the OFF position momentarily closing the fuel and oxidizer propellant isolation valves. These functions will be accomplished prior to impact.

The sequence of events involving an abort from the pad up to 42 seconds are as follows:

a. The ABORT SYSTEM PRPLNT DUMP AUTO switch on MDC-2 is placed to the PRPLNT DUMP AUTO position (figures 2.5-7 and 2.5-13) and the CM RCS LOGIC switch on MDC-1 is placed to the CM RCS LOGIC position at sometime in the countdown prior to T + 0.

b. The following events occur simultaneously upon the receipt of the abort signal. The command may be generated automatically by the sequential events control system or by manually rotating the translation control counterclockwise:

1. When the abort signal is received, the two squib-operated helium isolation valves in each subsystem are initiated open, pressurizing subsystems 1 and 2. Manual backup would be the CM RCS press switch on MDC-2.

2. The squib-operated helium interconnect valve for the oxidizer and fuel tanks are initiated open. If only one of the two squib helium isolation valves was initiated open, both subsystems are pressurized as a result of the helium interconnect squib valve interconnect.

3. The solenoid-operated fuel and oxidizer isolation shutoff valves are closed. This prevents fuel and oxidizer from flowing to the thrust chamber assemblies.

4. The squib-operated fuel and oxidizer interconnect valves are initiated open. If only one of the two oxidizer or fuel overboard dump squib valves was initiated open, the oxidizer and fuel manifolds of each respective system are common as a result of the oxidizer and fuel interconnect squib valve.

5. The squib-operated oxidizer overboard dump valves are initiated open directing the oxidizer to an oxidizer blowout plug, in the aft heat shield of the CM. The pressure buildup causes the pin in the blowout plug to shear, thus blowing the plug and dumping the oxidizer overboard. The entire oxidizer supply is dumped in approximately 13 seconds.

6. The RCS latching relay will not energize in the event of an abort from 0 to +42 seconds because of the position of the PRPLNT DUMP AUTO switch (figures 2.5-7 and 2.5-13). Thus, no commands are allowed into the controller reaction jet ON-OFF assembly.

7. The CM-SM RCS transfer motor-driven switches are automatically driven upon receipt of the abort signal, transferring the logic circuitry from SM RCS engines to CM RCS engines.

8. Five seconds after abort initiation, the squib-operated fuel overboard dump valves are initiated open and route the fuel to a fuel blowout plug in the aft heat shield of the CM. The pressure buildup causes the pin in the blowout plug to shear, thus blowing the plug and dumping the fuel overboard. The entire fuel supply is dumped in approximately 13 seconds.

9. Thirteen seconds after the fuel dump sequence was started the fuel and oxidizer bypass squib valves subsystems 1 and 2 are initiated open. This purges the fuel and oxidizer systems out through the fuel and oxidizer overboard dumps, respectively, and depleting the helium source pressure.

During the prelaunch period the MAIN BUS TIE switches on MDC-5 are in the AUTO position. In the event of a pad abort, electrical power is automatically applied to the main buses. Just prior to lift-off the electrical power is applied to the main buses by manually placing the two MAIN BUS TIE switches on MDC-5 to BAT A/C and BAT B/C positions.

The sequence of events if an abort is initiated after 42 seconds up to launch escape tower jettison are as follows:

a. At 42 seconds after lift-off, as a normal manual function the PRPLNT DUMP AUTO switch on MDC-2 is placed to the auto RCS CMD position. This safes the oxidizer, fuel dump, and purge circuitry (figures 2.5-7 and 2.5-13) and sets up the circuitry for the RCS latching relay.

b. The CM RCS LOGIC switch MDC-1 was placed to CM RCS LOGIC prior to T + 0.

c. Initiate both helium isolation squib valves in the CM RCS subsystems 1 and 2. Manual backup would be the CM RCS PRESS switch on MDC-2; thus, pressurizing CM RCS subsystems 1 and 2.

d. Automatically drives the CM SM transfer motors from SM RCS engines to CM RCS engines. Manual backup would be the RCS transfer switch on MDC-2 to CM position.

e. Energize the RCS latching relay one second after receipt of the abort signal. This allows the controller reaction jet ON-OFF assembly to provide electrical commands to the CM RCS. Manual backup would be the RCS CMD switch on MDC-2.

f. Dependent upon the altitude of abort initiation, the launch escape tower canards orient the CM for descent or the CM RCS orients the CM for descent.

g. At 24,000 ft, the barometric switch energizes the RCS latching relay (providing the ELS LOGIC switch on MDC-1 is in AUTO). This removes electrical power from the controller reaction jet ON-OFF assembly, thus the CM RCS engines. Manual backup would be the RCS CMD switch on MDC-2.

h. At main parachute line stretch, as a normal manual function the CM PRPLNT DUMP switch on MDC-1 is placed to DUMP initiating the following functions:

1. Same as in a normal entry sequence.

RCS

2.5.7 CM RCS PERFORMANCE AND DESIGN DATA.

2.5.7.1 Design Data.

The following list contains data on the CM RCS components:

Helium Tanks (2)	4150±50 psig at 70° ±5°F during servicing; setting on launch pad 70° ±10°F. Capacity 0.57 lb, inside diameter 8.84 in., wall

	thickness 0.105 in., internal volume of 365±5 cubic inches at 4150±50 psig, and weight 5.25 lb.
Helium Isolation Squib Valve Filter	Removes 98 percent of all particles whose two smallest dimensions are greater than 40 microns. Removes 100 percent of all particles whose two smallest dimensions are greater than 74 microns.
Regulator Units (4)	Primary 291±4 psig. Lockup pressure minimum of 287 psig and not to exceed 302 psig. Secondary - lockup 287 to 302 psig. Filter 25 microns nominal, 40 microns absolute at inlet of each regulator unit.
Check Valve Filters	40 microns nominal, 74 microns absolute. One at each inlet to check valve assembly, one at each test port.
Helium Relief Valves (4)	Diaphragm rupture at 340±8 psi. Filter 10 microns nominal, 25 microns absolute. Relieve at 346±14 psig. Reseat at no less than 327 psig. Flow capacity 0.3 lb/minute at 60°F and 346±14 psig. Bleed device closes when increasing pressure has reached no more than 179 psig in the cavity, and a helium flow of less than 20 standard cubic centimeters per hour across the bleed device and relief valve assembly combined. The bleed device reopens when decreasing pressure has reached no less than 20 psig.
Helium Manifold Pressure Transducer (4)	Illuminates caution and warning lights on MDC-2 (CM RCS 1 or 2). After helium isolation squib valve actuation: Underpressure 260 psia. Overpressure 330 psia.

Fuel Tanks (2)	See SM RCS secondary fuel tanks.
Oxidizer Tank (2)	See SM RCS secondary oxidizer tanks.
Valve Isolation Burst Diaphragm (4)	Rupture at 241±14 psig within 2 seconds after rupture pressure is reached at any temperature between 40° to 105°F. Filter 75 microns nominal, 100 microns absolute.
Engine	200-second service life, 3000 operational cycles
	Nominal thrust 93 pounds
	Expansion ratio 9 to 1
	Cooling Ablation
	Injector type 16 on 16 splash plate
	Combustion chamber-refrasil ablative sleeve and graphite base throat insert.
	Automatic and manual coils connected in parallel.
	Weight 8.3 lb
	Length 11.65 in. maximum
	Nozzle exit diameter 2.13 in.
	Nozzle extensions ablative refrasil
Oxidizer Blowout Plug	Pin shears at approximately 200 psi
Fuel Blowout Plug	Pin shears at approximately 200 psi

2.5.7.2 Performance Data.

Refer to CSM/LM Spacecraft Operational Data Book SNA-8-D-027 CSM (SD 68-447).

2.5.7.3 CM RCS Electrical Power Distribution.

See figure 2.5-14 for electrical power distribution.

2.5.8 CM RCS OPERATION LIMITATIONS AND RESTRICTIONS.

Refer to AOH, Volume 2, Malfunction Procedures.

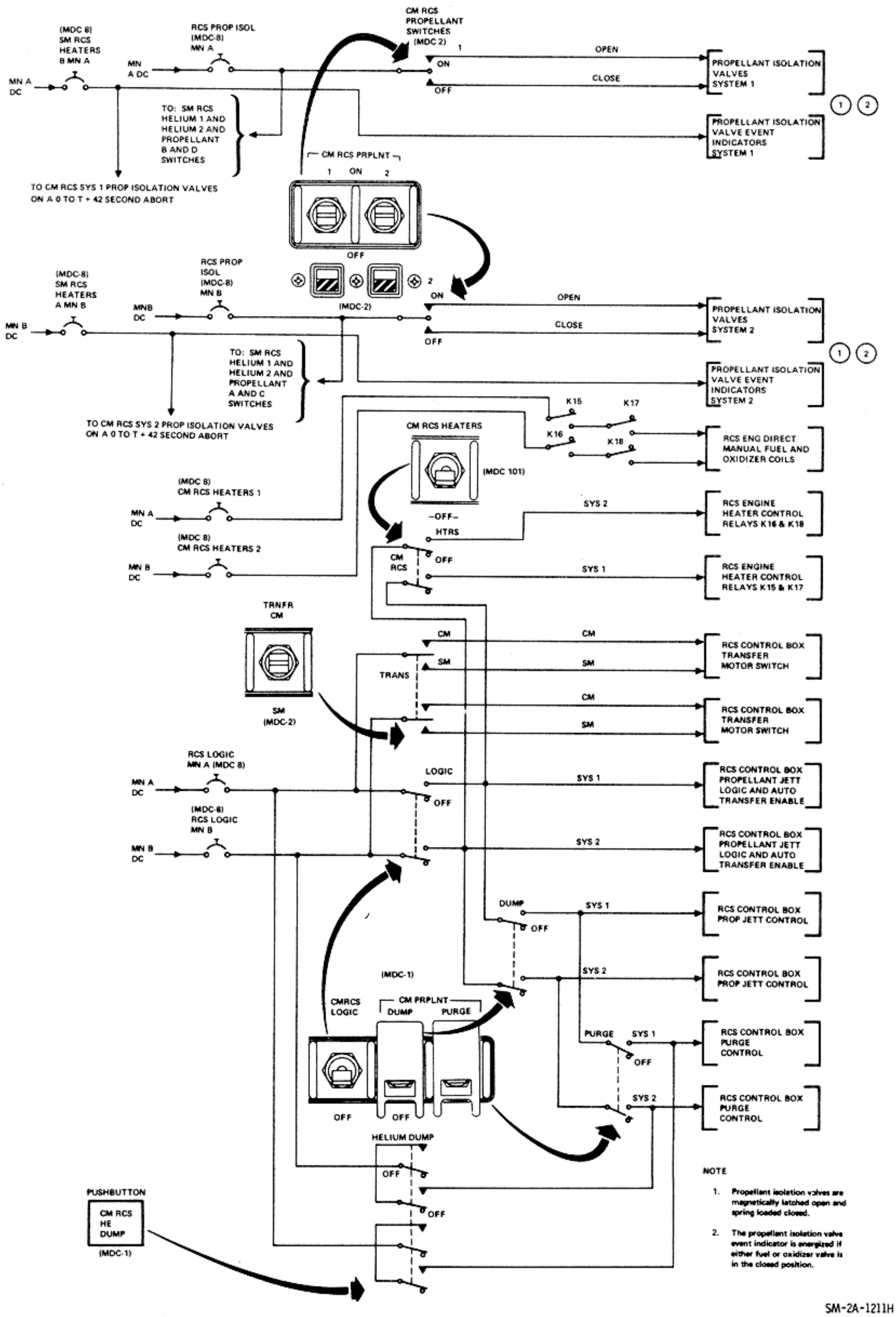

Figure 2.5-14. CM RCS Electrical Power Distribution

SECTION 2

SUBSECTION 2.6

ELECTRICAL POWER SYSTEM
(CSM 106 and Subs)

2.6.1 INTRODUCTION.

The electrical power subsystem (EPS) consists of the equipment and reactants required to supply the electrical energy sources, power generation and controls, power conversion and conditioning, and power distribution to the electrical buses (figure 2.6-1). Electrical power distribution and conditioning equipment beyond the buses is not considered a part of this subsystem. Power is supplied to fulfill all command and service module (CSM) requirements, as well as to the lunar module (LM) for operation of heater circuits after transposition and docking.

The EPS can be functionally divided into four major categories:

- Energy storage: Cryogenics storage, entry and postlanding batteries, pyrotechnic batteries.
- Power generation: Fuel cell power plants.
- Power conversion: Solid state inverters, battery charger.
- Power distribution: D-C and a-c power buses, d-c and a-c sensing circuits, controls and displays.

In general, the system operates in three modes: peak, average, and minimum mission loads. Peak loads occur during performance of major delta V maneuvers, including boost. These are of relatively short duration with d-c power being supplied by three fuel cell power plants supplemented by two of three entry batteries. A-C power is supplied by two of three inverters.

The second mode is that part of the mission when power demands vary about the average. During these periods d-c power is supplied by three fuel cell power plants and a-c power by one or two inverters.

During drifting flight when power requirements are at a minimum level, d-c power is supplied by three fuel cell powerplants. A-C power is supplied by one or two inverters. In all cases, operation of one or two inverters is dependent on the total cryogen available. Two-inverter operation results in a slight increase of cryogenic usage because of a small reduction in inverter efficiency due to the lesser loads on each inverter. However, two inverter operation precludes complete loss of ac in the event of an inverter failure.

2.6.2 FUNCTIONAL DESCRIPTION.

2.6.2.1 Energy Storage.

The primary source of energy is provided by the cryogenic gas storage system that provides fuel (H_2) and oxidizer (O_2) to the power generating system. Two hydrogen and two oxygen tanks, with the associated controls and plumbing, are located in the service module. Storage of reactants is accomplished under controlled cryogenic temperatures and pressures; automatic and manual pressure control is provided. Automatic heating of the reactants for repressurization is dependent on energy demand by the power generating and/or environmental control subsystems. Manual control can be used when required.

A secondary source of energy storage is provided by five silver oxide-zinc batteries located in the CM. Three rechargeable entry and postlanding batteries supply sequencer logic power at all times, supplemental d-c power for peak loads, all operating power required for entry and postlanding, and can be connected to power either or both pyro circuits. Two pyro batteries provide energy for activation of pyro devices throughout all phases of a mission.

2.6.2.2 Power Generation.

Three Bacon-type fuel cell power plants, generating power through electrochemical reaction of H_2 and O_2, supply primary d-c power to spacecraft systems until CSM separation. Each power plant is capable of normally supplying from 400 to 1420 watts at 31 to 27 vdc (at fuel cell terminals) to the power distribution system. During normal operation all three power plants generate power, but two are adequate to complete the mission. Should two of the three malfunction, one power plant will insure successful mission termination; however, spacecraft loads must be reduced to operate within the limits of a single powerplant.

Normal fuel cell connection to the distribution system is: Fuel cell 1 to main d-c bus A; fuel cell 2 to main d-c bus A and B; and fuel cell 3 to main d-c bus B. Manual switch control is provided for power plant connection to the distribution system, and manual and/or automatic control for power plant isolation in case of a malfunction.

During the CSM separation maneuver the power plants supply power through the SM buses to two SM jettison control sequencers. The sequencers sustain SM RCS retrofire during CSM separation and fire the SM positive roll RCS engines two seconds after separation to stabilize the SM during entry. Roll engine firing is terminated 7.5 seconds after separation. The power plants and SM buses are isolated from the umbilical through a SM deadface. The sequencers are connected to the SM buses when the CM/SM SEP switch (MDC-2) is activated; separation occurs 100 milliseconds after switch activation.

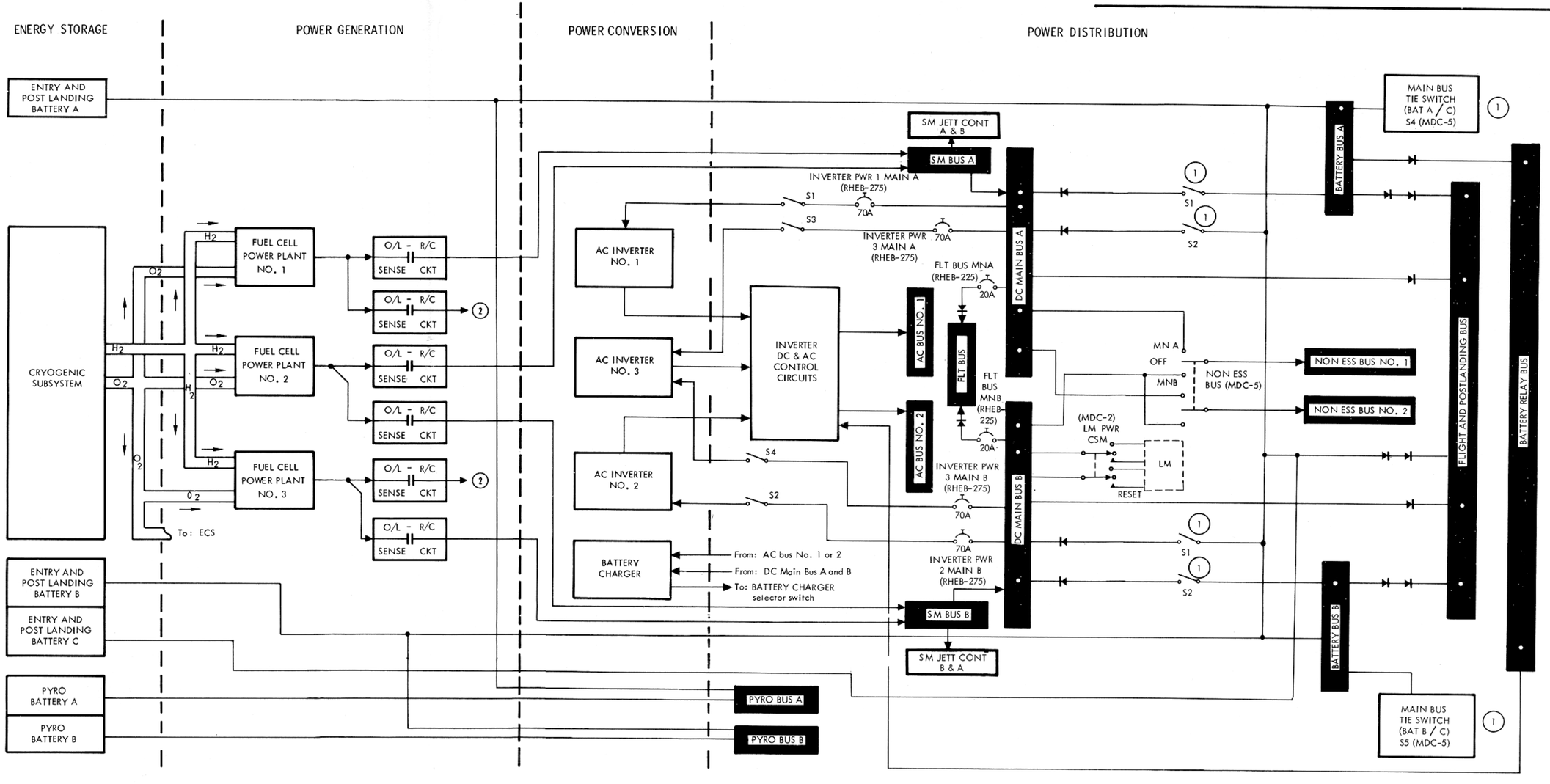

NOTES:

1. Motor switches S1 and S2 close when main bus tie switches S4 and S5 are set to Bat A/C and Bat B/C.
2. FC1 can be connected to SM bus B & FC 3 to SM bus A
3. DC bus control circuit breakers are illustrated in battery charger and CM DC bus control circuits schematic

Figure 2.6-1. Electrical Power Subsystem Block Diagram

EPS

2.6.2.3 Power Conversion.

Primary d-c power is converted into a-c by solid state static inverters that provide 115/200-volt 400-cps 3-phase a-c power up to 1250 volt-amperes each. A-C power is connected by motor switch controls to two a-c buses for distribution to the a-c loads. One inverter has the capability of supplying all spacecraft primary a-c power. One inverter can power both buses while the two remaining inverters act as redundant sources. However, throughout the flight, each bus is powered by a separate inverter. Provisions are made for inverter isolation in the event of malfunctions. Inverter outputs cannot be phase synchronized, therefore interlocked motorized switching circuits are incorporated to prevent the connection of two inverters to the same bus.

A second conversion unit, the battery charger, assures keeping the three entry and postlanding batteries in a fully charged state. It is a solid state device utilizing d-c from the fuel cells and ac from the inverter to develop charging voltage.

2.6.2.4 Power Distribution.

Distribution of d-c power is accomplished via two redundant d-c buses in the service module which are connected to two redundant buses in the command module through a SM deadface, the CSM umbilical, and a CM deadface. Additional buses provided are: two d-c buses for servicing non-essential loads; a flight bus for servicing inflight telecommunications equipment; two battery buses for distributing power to sequencers, gimbal motor controls, and servicing the battery relay bus for power distribution switching; and a flight and postlanding bus for servicing some communications equipment and the postlanding loads.

Three phase ac is distributed via two redundant a-c buses, providing bus selection through switches in the a-c operated component circuits.

Power to the lunar module is provided through two umbilicals which are manually connected after completion of transposition and docking. An average of 81 watts dc is provided to continuous heaters in the abort sensor assembly (ASA), and cycling heaters in the landing radar, rendezvous radar, S-band antenna and inertial measurement unit (IMU). Power consumption with all heaters operating simultaneously is approximately 309 watts. LM floodlighting is also powered through the umbilical for use during manned lunar module operation while docked with the CSM.

A d-c sensing circuit monitors voltage on each main d-c bus and an a-c sensing circuit monitors voltage on each a-c bus. The d-c sensors provide an indication of an undervoltage by illuminating a warning light. The a-c sensors illuminate a warning light when high- or low-voltage limits are exceeded. In addition, the a-c

sensors activate an automatic disconnect of the inverter from the a-c bus during an overvoltage condition. A-C overload conditions are displayed by illumination of an overload warning light and are accompanied by a low voltage light. Additional sensors monitor fuel cell overload and reverse current conditions, providing an automatic disconnect, together with visual indications of the disconnect whenever either condition is exceeded.

Switches, meters, lights, and talk-back indicators are provided for controlling and monitoring all functions of the EPS.

2.6.3 MAJOR COMPONENT/SUBSYSTEM DESCRIPTION.

The subsequent paragraphs describe the cryogenic storage subsystem, and each of the various EPS components.

2.6.3.1 Cryogenic Storage.

The cryogenic storage subsystem (figures 2.6-2 and 2.6-3) supplies hydrogen to the EPS, and oxygen to the EPS, ECS, and for initial LM pressurization. The two tanks in the hydrogen and oxygen systems are of sufficient size to provide a safe return from the furthest point of the mission on the fluid remaining in any one tank. The physical data of the cryogenic storage subsystem are as follows:

	Weight of Usable Cryogenics (lb/tank)	Design Storage Pressure (psia)	Minimum Allowable Operating Pressure (psia)	Approximate Flow Rate at Min dq/dm (+145°F environment) (lb/hr-2 tanks)	Approximate Quantities at Minimum Heater & Fan Cycling (per tank) (min dq/dm)
O_2	320 (min)	900±35	150	1.71	45 to 25%
H_2	28 (min)	245 (+15, -20)	100	0.140	53 to 33%

Initial pressurization from fill to operating pressures is accomplished by GSE. After attaining operating pressures, the cryogenic fluids are in a single-phase condition, therefore completely homogeneous. This avoids sloshing which could cause sudden pressure fluctuations, possible damage to internal components, and prevents positive mass quantity gauging. The single-phase expulsion process continues at nearly constant pressure and increasing temperature above the 2-phase region.

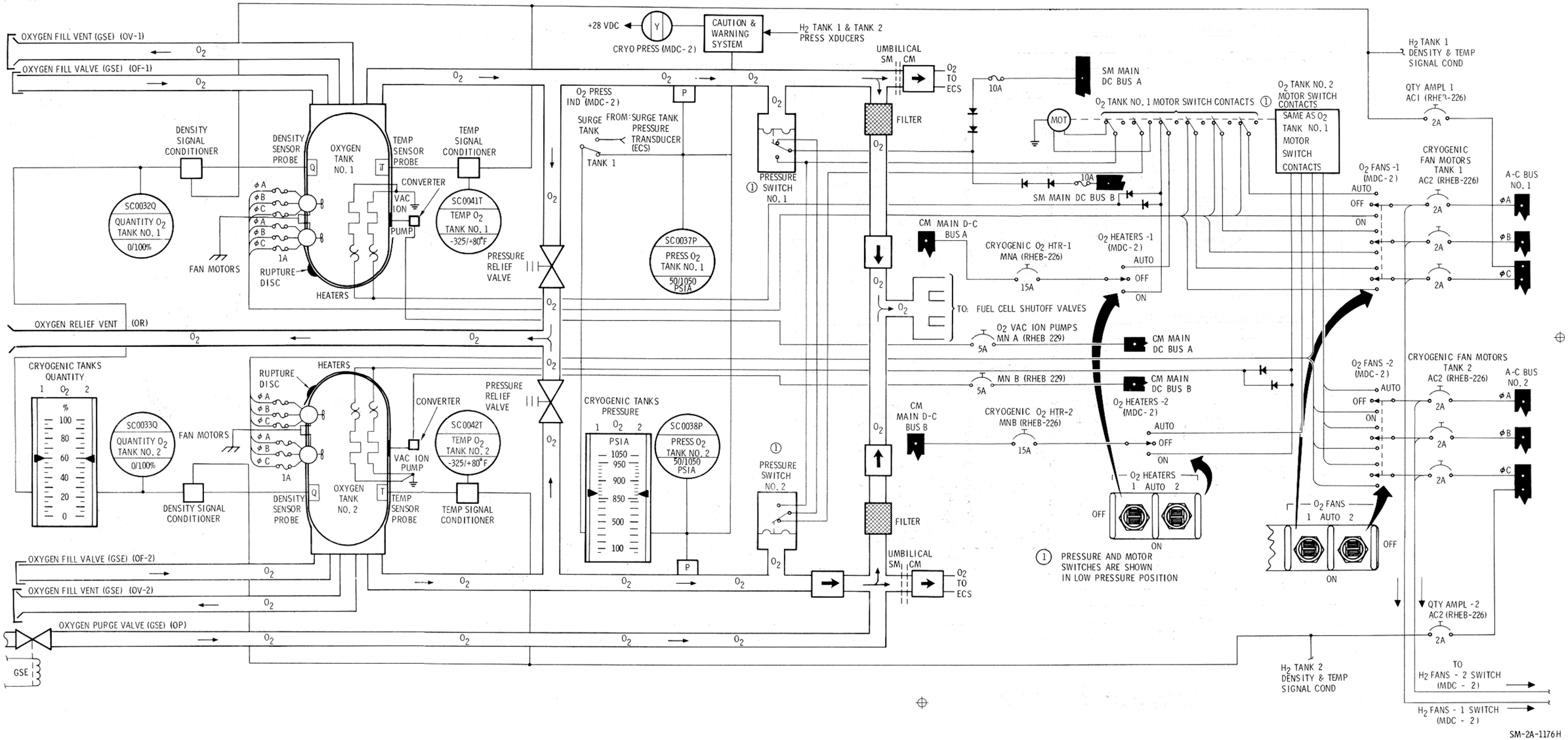

Figure 2.6-2. Cryogenic Storage Subsystem (Oxygen)

EPS

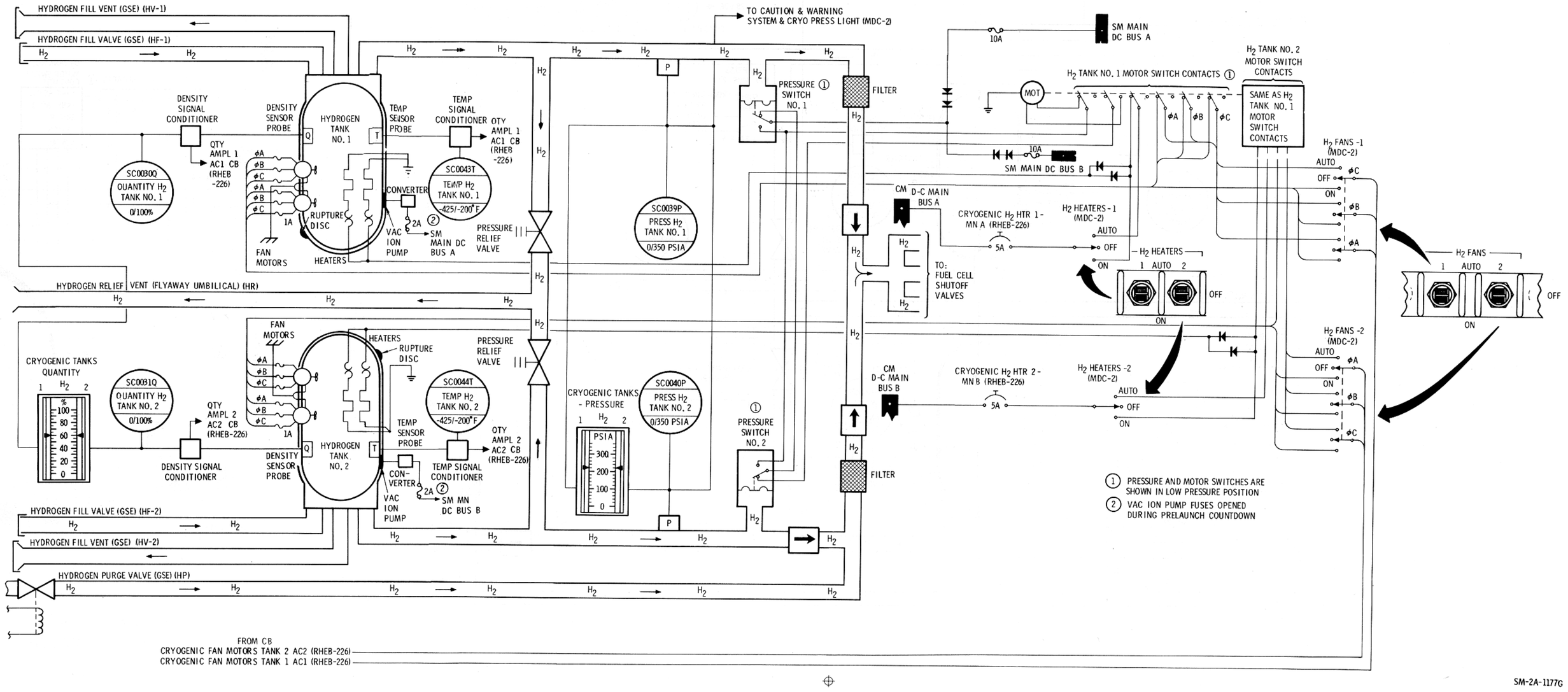

Figure 2.6-3. Cryogenic Storage Subsystem (Hyrogen)

Two parallel d-c heaters in each tank supply the heat necessary to maintain design pressures. Two parallel 3-phase a-c circulating fans circulate the fluid over the heating elements to maintain a uniform density and decrease the probability of stratification. A typical heater and fan installation is shown in figure 2.6-4. Relief valves provide overpressure relief, check valves provide tank isolation, and individual fuel cell shutoff valves provide isolation of malfunctioning power plants. Filters extract particles from the flowing fluid to protect the ECS and EPS components. The pressure transducers and temperature probes indicate the thermodynamic state of the fluid. A capacitive quantity probe indicates quantity of fluid remaining in the tanks.

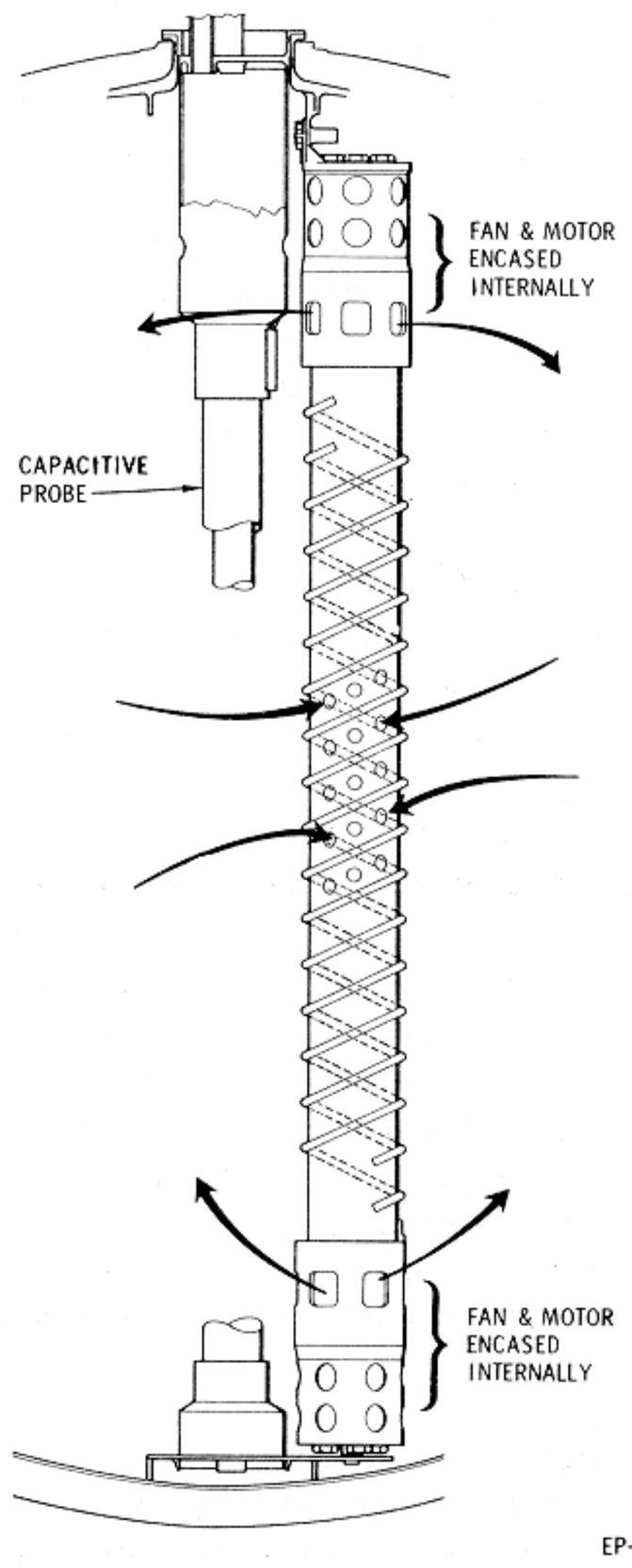

Figure 2.6-4. Cryogenic Pressurization and Quantity Measurement Devices

Repressurization of the systems can be automatically or manually controlled by switch selection. The automatic mode is designed to give a single-phase reactant flow into the fuel cell and ECS feed lines at design pressures. The heaters and fans are automatically controlled through a pressure switch-motor switch arrangement. As pressure in the tanks decreases, the pressure switch in each tank closes to energize the motor switch, closing contacts in the heater and fan circuits. Both tanks have to decrease in pressure before heater and fan circuits are energized. When either tank reaches the upper operating pressure limit, that respective pressure switch opens to again energize the motor switch, thus opening the heater and fan circuits to both tanks. The O_2 tank circuits are energized at 865 psia minimum and de-energized at 935 psia maximum. The H_2 circuits energize at 225 psia minimum and de-energize at 260 psia maximum. The most accurate quantity readout will be acquired shortly after the fans have stopped. During all other periods partial stratification may degrade quantity readout accuracy.

When the systems reach the point where heater and fan cycling is at a minimum (due to a reduced heat requirement), the heat leak of the tank is sufficient to maintain design pressures provided flow is within the min dq/dm values shown in the preceding tabulation. This realm of operation is referred to as the min dq/dm region. The minimum heat requirement region for oxygen starts at approximately 45 percent quantity in the tanks and terminate at approximately 25 percent quantity. Between these tank quantities, minimum heater and fan cycling will occur under normal usage. The amount of heat required for repressurization at quantities below 25 percent starts to increase until below the 3 percent level practically continuous heater and fan operation is required. In the hydrogen system, the quantity levels for minimum heater and fan cycling are between approximately 53 and 33 percent, with continuous operation occurring at approximately 5 percent level.

Assuming a constant level flow from each tank (O_2 - 1 lb/hr, H_2 - 0.09 lb/hr) each successive repressurization period is of longer duration. The periods between repressurizations lengthen as quantity decreases from full to the minimum dq/dm level, and become shorter as quantity decreases from the minimum dq/dm level to the residual level. Approximate repressurization periods are shown in the following chart, which also shows the maximum flow rate in pounds per hour from a single tank with the repressurization circuits maintaining minimum design pressure.

The maximum continuous flow that each cyrogenic tank can provide at minimum design pressure is dependent on the quantity level and the heat required to maintain that pressure. The heat required to maintain a constant pressure decreases as quantity decreases from full to the minimum dq/dm point. As quantity decreases beyond the minimum dq/dm region, the heat required to maintain a constant pressure increases.

As fluid is withdrawn, a specific amount of heat is withdrawn. When the withdrawal rate exceeds the heat that can be supplied by the heaters, fan motors, and heat leak, there is a resultant pressure decrease below the minimum design operating level.

The ability to sustain pressure and flow is a factor of the amount of heat required versus the heat provided by heaters, fan motors, and heat leak. Since heat leak characteristics of each tank vary slightly, the flow each tank can provide will also vary to a small degree. Heat input from heaters, fan motors, and heat leak into an O_2 tank is 595.87 Btu/hour (113.88 watt heaters supply 389.67 Btu, 52.8 watt fan motors supply 180.2 Btu, and heat leak supplies 26 Btu). Heat input from similar sources into a H_2 tank is 94.6 Btu/hr (18.6 watt heaters supply 63.48 Btu, 7 watt fan motors supply 23.89 Btu, and heat leak supplies 7.24 Btu). These figures take into consideration the line loss between the power source and the operating component.

	Oxygen		Hydrogen	
Quantity (percent)	Repressurization Time (Minutes) (865 to 935 psia)	Flow at 865 psia	Repressurization Time (Minutes) (225 to 260 psia)	Flow at 225 psia
100	4.0	3.56	20.0	0.38
95	4.3	3.97	21.0	0.42
90	4.6	4.55	22.0	0.46
85	5.0	5.27	23.0	0.49
80	5.4	6.02	24.5	0.52
75	5.7	7.01	26.5	0.65
70	6.5	7.94	28.5	0.76
65	7.4	9.01	31.0	0.80
60	8.7	10.80	33.5	0.87
55	9.6	12.54	36.0	0.93
50	10.8	14.19	39.0	0.97
45	11.5	15.69	41.0	0.98
40	12.4	17.01	41.0	0.97
35	12.6	17.56	41.0	0.94
30	13.0	17.56	40.5	0.91
25	13.1	16.55	40.5	0.83
20	13.2	15.48	42.0	0.71
15	14.5	12.28	47.0	0.54
10	17.8	8.76	58.0	0.37
7.5	21.4	7.09	71.0	0.23
5	24.0	5.37	Continuous	0.16

To avoid excessive temperatures, which could be realized during continuous heater and fan operation at extremely low quantity levels, a thermal sensitive interlock device is in series with each heater element. The device automatically opens the heater circuits when internal tank shell temperatures reach +90°F, and closes the circuits at +70°F. Assuming normal consumption, oxygen temperature will be approximately -157°F at mission termination, while hydrogen temperature will be approximately -385°F.

The manual mode of operation bypasses the pressure switches, and supplies power directly to the heaters and/or fans through the individual control switches. It can be used in case of automatic control failure, heater failure, or fan failure.

Tank pressures and quantities are monitored on meters located on MDC-2. The caution and warning system (CRYO PRESS) will alarm when oxygen pressure in either tank exceeds 950 psia or falls below 800 psia. The hydrogen system alarms above 270 psia and below 220 psia. Since a common lamp is provided, reference must be made to the individual pressure and quantity meters (MDC-2) to determine the malfunctioning tank. Tank pressures, quantities, and reactant temperatures of each tank are telemetered to MSFN.

Oxygen relief valves vent at a pressure between 983 and 1010 psig and reseat at 965 psig minimum. Hydrogen relief valves vent at a pressure between 273 and 285 psig, and reseat at 268 psig minimum. Full flow venting occurs approximately 2 pounds above relief valve opening pressure.

All the reactant tanks have vac-ion pumps to maintain the integrity of the vacuum between the inner and outer shell, thus maintaining heat leak at or below the design level. SM main d-c bus A distributes power to the H_2 tank 1 pump and bus B to the H_2 tank 2 pump. Fuses provide power source protection. These fuses are removed during prelaunch to disable the circuit for flight. Circuit breakers, O_2 VAC ION PUMPS - MNA - MNB (RHEB-229), provide power source protection for the CM main buses, which distribute power to the O_2 vac-ion pumps. The circuit breakers allow use of the O_2 vac-ion pump circuits throughout flight, and provide a means of disabling circuit if necessary.

The most likely period of overpressurization in the cryogenic system will occur during operation in the minimum dq/dm region. The possibility of overpressurization is predicated on the assumption of a vacuum breakdown, resulting in an increase in heat leak. Also, under certain conditions, i.e., extremely low power levels and/or a

depressurized cabin, demand may be lower than the minimum dq/dm flow necessary. Any of the preceding conditions would result in an increase of pressure within a tank.

In the case of hydrogen tank overpressurization, prior to reaching relief valve cracking pressure, tank pressure can be decreased by performing an unscheduled fuel cell hydrogen purge. A second method for relieving overpressure is to increase electrical loads, thus increasing fuel cell demand. However, in using this method, consideration must be given to the fact that there will be an increase in oxygen consumption, which may not be desirable.

Several procedures can be used to correct an overpressure condition in the oxygen system. One is to perform an unscheduled fuel cell purge. A second is to increase oxygen flow into the command module by opening the ECS DIRECT O_2 valve. The third is to increase electrical loads, which may not be desirable because this method will also increase hydrogen consumption.

Increase of electrical loads is probably the least desirable method because of the increase in demand on both reactant systems, although an overpressure correction is required in only one reactant system.

A requirement for an overpressure correction in both reactant systems simultaneously is remote, since both reactant systems do not reach the minimum dq/dm region in parallel.

During all missions, to retain a single tank return capability, there is a requirement to maintain a balance between the two tanks in each of the reactant systems. When a 2 to 4 percent difference is indicated on the oxygen quantity meters (MDC-2), the O_2 HEATERS switch (MDC-2) of the lesser tank is positioned to OFF until tank quantities equalize. A 3 percent difference in the hydrogen quantity meters (MDC-2) will require positioning the H_2 HEATERS switch (MDC-2) of the lesser tank to OFF until tank quantities equalize. This procedure retains the automatic operation of the repressurization circuits, and provides for operation of the fan motors during repressurization to retain an accurate quantity readout in all tanks. The necessity for balancing should be determined shortly after a repressurization cycle, since quantity readouts will be most accurate at this time.

2.6.3.2 Batteries.

Five silver oxide-zinc storage batteries are incorporated in the EPS. These batteries are located in the CM lower equipment bay.

Three rechargeable entry and postlanding batteries (A, B, and C) power the CM systems after CSM separation and during postlanding. Prior to CSM separation, the batteries provide a secondary source of power while the fuel cells are the primary source. The entry batteries are used for the following purposes:

- Provide CM power after CSM separation
- Supplement fuel cell power during peak load periods (Delta V maneuvers)
- Provide power during emergency operations (failure of two fuel cells)
- Provide power for EPS control circuitry (relays, indicators, etc.)
- Provide sequencer logic power
- Provide power for recovery aids during postlanding
- Batteries A, B, or C can power pyro circuits by selection.

Each entry and postlanding battery is mounted in a vented plastic case and consists of 20 silver oxide-zinc cells connected in series. The cells are individually encased in plastic containers which contain relief valves that open at 35±5 psig, venting during an overpressure into the battery case. The three cases can be vented overboard through a common manifold, the BATTERY VENT valve (RHEB-252), and the ECS waste water dump line.

Since the BATTERY VENT is closed prior to lift-off, the interior of the battery cases is at a pressure of one atmosphere. The pressure is relieved after earth orbit insertion and completion of cabin purge by positioning the control to VENT for 5 seconds. After completion the control is closed, and pressure as read out on position 4A of the System Test Meter (LEB-101) should remain at zero unless there is battery outgassing. This outgassing can be caused by an internal battery failure, an abnormal high-rate discharge, or by overcharging. If a pressure increase is noted on the system test meter, the BATTERY VENT is positioned to VENT for 5 seconds, and reclosed. Normal battery charging procedures require a check of the battery manifold after completion of recharge.

Since the battery vent line is connected to the waste water dump line, it provides a means of monitoring waste water dump line plugging, which would be indicated by a pressure rise in the battery manifold line when the BATTERY VENT control is positioned to VENT. Corrective procedures for dump line plugging are found in section 2.12.

Each battery is rated at 40-ampere hours (AH) minimum and will deliver this at a current output of 35 amps for 30 minutes and a subsequent output of 2 amps for the remainder of the rating.

At Apollo mission loads each battery is capable of providing 45 AH and will provide this amount after each complete recharge cycle. However, 40 AH is used in mission planning for inflight capability, and 45 AH for postlanding capability of a fully charged battery.

Open circuit voltage is 37.2 volts. Sustained battery loads are extremely light (2 to 3 watts); therefore a battery bus voltage of approximately 34 vdc will be indicated on the spacecraft voltmeter, except when the main bus tie switches have been activated to tie the battery outputs to the main d-c buses. Normally only batteries A and B will be connected to the main d-c buses. Battery C is isolated during prelaunch by opening the MAIN A-BAT C and MAIN B-BAT C circuit breakers (RHEB-275). Battery C will therefore provide a backup for main d-c bus power in case of failure of battery A or B or during the time battery A or B is being recharged. The two-battery configuration provides more efficient use of fuel cell power during peak power loads and decreases overall battery recharge time. The MAIN A- and MAIN B-BAT C circuit breakers are closed prior to CSM separation or as required during recharge of battery A or B.

Battery C, through circuit breakers BAT C to BAT BUS A and BAT C to BAT BUS B (RHEB-250), provides backup power to the respective battery bus in the event of failure of entry battery A or B. These circuit breakers are normally open until a failure of battery A or B occurs. This circuit can also be used to recharge battery A or B in the event of a failure in the normal charging circuit.

The two pyrotechnic batteries supply power to initiate ordnance devices in the SC. The pyrotechnic batteries are isolated from the rest of the EPS to prevent the high-power surges in the pyrotechnic system from affecting the EPS, and to ensure source power when required. These batteries are not to be recharged in flight. Entry and postlanding battery A, B, or C can be used as a redundant source of power for initiating pyro circuits in the respective A or B pyro system, if either pyro battery fails. This can be performed by proper manipulation of the circuit breakers on RHEB-250. Caution must be exercised to isolate the failed battery prior to connecting the replacement battery.

Performance characteristics of each SC battery are as follows:

Battery	Rated Capacity per Battery	Open Circuit Voltage (max.)	Nominal Voltage	Minimum Voltage	Ambient Battery Temperature
Entry and Postlanding, A, B, and C (3)	40 amp-hrs (25 ampere rate)	37.8 vdc max. (37.2 vdc in flight)	29 vdc (35 amps load)	27 vdc (35 amps load)	50° to 110°F
Pyro A and B (2)	0.75 amp-hrs (75 amps for 36 seconds)	37.8 vdc max. (37.2 vdc in flight)	23 vdc (75 amps load)	20 vdc (75 amps load) (32 vdc open circuit)	60° to 110°F

NOTE Pyro battery load voltage is not measurable in the SC due to the extremely short time they power pyro loads.

2.6.3.3 Fuel Cell Power Plants.

Each of the three Bacon-type fuel cell power plants is individually coupled to a heat rejection (radiator) system, the hydrogen and oxygen cyrogenic storage systems, a water storage system, and a power distribution system. A typical power plant schematic is shown in figure 2.6-5.

The power plants generate d-c power on demand through an exothermic chemical reaction. The by-product water is fed to a potable water storage tank in the CM where it is used for astronaut consumption and for cooling purposes in the ECS. The amount of water produced is equivalent to the power produced which is relative to the reactant consumed.

REACTANT CONSUMPTION AND WATER PRODUCTION

Load (amps)	O_2 lb/hr	H_2 lb/hr	H_2O lb/hr	cc/hr
0.5	0.0102	0.001285	0.01149	5.21
1	0.0204	0.002570	0.02297	10.42
2	0.0408	0.005140	0.04594	20.84
3	0.0612	0.007710	0.06891	31.26
4	0.0816	0.010280	0.09188	41.68

REACTANT CONSUMPTION AND
WATER PRODUCTION (Cont)

Load (amps)	O_2 lb/hr	H_2 lb/hr	H_2O lb/hr	cc/hr
5	0.1020	0.012850	0.11485	52.10
6	0.1224	0.015420	0.13782	62.52
7	0.1428	0.017990	0.16079	72.94
8	0.1632	0.020560	0.18376	83.36
9	0.1836	0.023130	0.20673	93.78
10	0.2040	0.025700	0.2297	104.20
15	0.3060	0.038550	0.34455	156.30
20	0.4080	0.051400	0.45940	208.40
25	0.5100	0.064250	0.57425	260.50
30	0.6120	0.077100	0.68910	312.60
35	0.7140	0.089950	0.80395	364.70
40	0.8160	0.10280	0.91880	416.80
45	0.9180	0.11565	1.03365	468.90
50	1.0200	0.12850	1.1485	521.00
55	1.1220	0.14135	1.26335	573.10
60	1.2240	0.15420	1.3782	625.20
65	1.3260	0.16705	1.49305	677.30
70	1.4280	0.17990	1.6079	729.40
75	1.5300	0.19275	1.72275	781.50
80	1.6320	0.20560	1.83760	833.60
85	1.7340	0.21845	1.95245	885.70
90	1.8360	0.23130	2.06730	937.90
95	1.9380	0.24415	2.18215	989.00
100	2.0400	0.25700	2.2970	1042.00

FORMULAS:

$O_2 = 2.04 \times 10^{-2}$ I $H_2O = 10.42$ cc/amp/hr

$H_2 = 2.57 \times 10^{-3}$ I $H_2O = 2.297 \times 10^{-2}$ lb/amp/hr

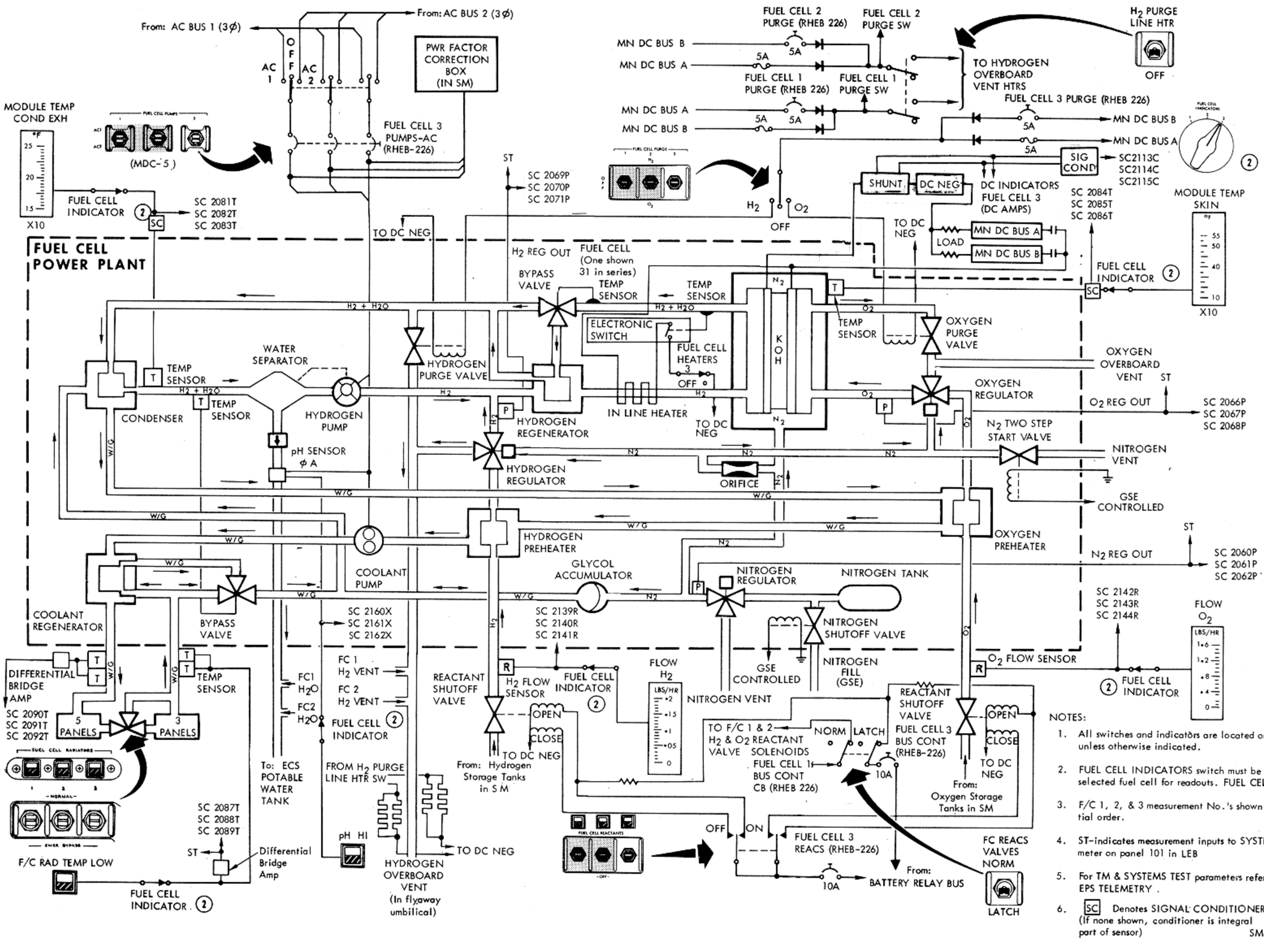

Figure 2.6-5. Fuel Cell Schematic

EPS

2.6.3.3.1 Component Description.

Each power plant consists of 31 single cells connected in series and enclosed in a metal pressure jacket. The water separation, reactant control, and heat transfer components are mounted in a compact accessory section attached directly above the pressure jacket.

Power plant temperature is controlled by the primary (hydrogen) and secondary (glycol) loops. The hydrogen pump, providing continuous circulation of hydrogen in the primary loop, withdraws water vapor and heat from the stack of cells. The primary bypass valve regulates flow through the hydrogen regenerator to impart exhaust heat to the incoming hydrogen gas. Flow is regulated in accordance with skin temperature. The exhaust gas flows to the condenser where waste heat is transferred to the glycol; the resultant temperature decrease liquifying some of the water vapor. The motor-driven centrifugal water separator extracts the liquid and feeds it to the potable water tank in the CM. The cool gas is then pumped back to the fuel cell through the primary regenerator by a motor-driven vane pump, which also compensates for pressure losses due to water extraction and cooling. Waste heat, transferred to the glycol in the condenser, is transported to the radiators located on the fairing between the CM and SM, where it is radiated into space. Individual controls (FUEL CELL RADIATORS, MDC-3), can bypass 3/8 of the total radiator area for each power plant. Radiator area is varied dependent on power plant condenser exhaust and radiator exit temperatures which are relevant to loads and space environment. Internal fuel cell coolant temperature is controlled by a condenser exhaust sensor, which regulates flow through a secondary regenerator to maintain condenser exhaust within desired limits. When either condenser exhaust or radiator exit temperature falls below tolerance limits (150° and -30°F respectively), the respective FUEL CELL RADIATORS switch is positioned to EMERG BYPASS to decrease the radiator area in use, thus decreasing the amount of heat being radiated. Since the three power plants are relatively close in load sharing and temperature operating regimes, the effect on the other power plants must be monitored. Generally simultaneous control over all three power plants will be required. Use of the bypass should be minimal because of power-plant design to retain heat at low loads and expel more heat at higher loads. The bypass is primarily intended for use after failure of two powerplants. Heat radiation effects on the single powerplant require continuous use of the bypass for the one remaining powerplant.

Reactant valves provide the interface between the power plants and cryogenic system. They are opened during pre-launch and closed only after a power plant malfunction necessitating its permanent isolation from the d-c system. Prior to launch, the FC REACS VALVES switch (MDC-3) is placed to the LATCH position. This applies a holding voltage to the open solenoids of the H_2 and O_2 reactant valves of the three power plants.

This voltage is required only during boost to prevent inadvertent closure due to the effects of high vibration. The reactant valves cannot be closed by use of the REACTANTS switches (MDC-3) with the holding voltage applied. The FC REACS VALVES switch is positioned to NORMAL after earth orbit insertion. During prelaunch, after power plant activation, the the three FC REACS circuit breakers (RHEB-226) are opened to prevent valve closure through inadvertent REACTANTS switch activation.

N_2 gas is individually stored in each power plant at 1500 psia and regulated to a pressure of 53±3 psia. Output of the regulator pressurizes the electrolyte in each cell, the coolant loop through an accumulator, and is coupled to the O_2 and H_2 regulators as a reference pressure.

Cryogenic oxygen, supplied to the power plants at 900±35 psia, absorbs heat in the lines, absorbs additional heat in the preheater, and reaches the oxygen regulator in a gaseous form at temperatures above 100°F. The differential regulator reduces oxygen pressure to 9.5 psia above the N_2 reference, thus supplying it to the fuel cell stack at 62.5±2 psia. Within the porous oxygen electrodes, the O_2 reacts with the H_2O in the electrolyte and the electrons provided by the external circuit to produce hydroxyl ions ($O_2 + 2H_2O + 4e = 4OH^-$).

Cryogenic hydrogen, supplied to the power plants at 245 (+15, -20) psia, is heated in the same manner as the oxygen. The differential hydrogen regulator reduces the pressure to 8.5 psia above the reference N_2, thus supplying it in a gaseous form to the fuel cells at 61.5±2 psia. The hydrogen reacts in the porous hydrogen electrodes with the hydroxyl ions in the electrolyte to produce electrons, water vapor, and heat ($2\ H_2 + 4OH^- = 4H_2O + 4e + \text{heat}$). The nickel electrodes act as a catalyst in the reaction. The water vapor and heat is withdrawn by the circulation of hydrogen gas in the primary loop and the electrons are supplied to the load.

Each of the 31 cells comprising a power plant contains electrolyte which on initial fill consists of 83 percent potassium hydroxide (KOH) and 17 percent water by weight. The power plant is initially conditioned to increase the water ratio, and during normal operation, water content will vary between 23 and 28 percent. At this ratio, the electrolyte has a critical temperature of 300°F (figure 2.6-6). It solidifies at an approximate temperature of 220°F. Power plant electrochemical reaction becomes effective at the critical temperature. Bringing power plants to critical temperature is performed by GSE and cannot be performed from SC power sources. Placing a load on the power plant will maintain it above the critical temperature. The automatic in-line heater circuit will maintain power plant temperature at 385°F with no additional loads applied.

Purging is a function of power demand and gas purity. O_2 purging requires 2 minutes and H_2 purging 80 seconds. A hydrogen

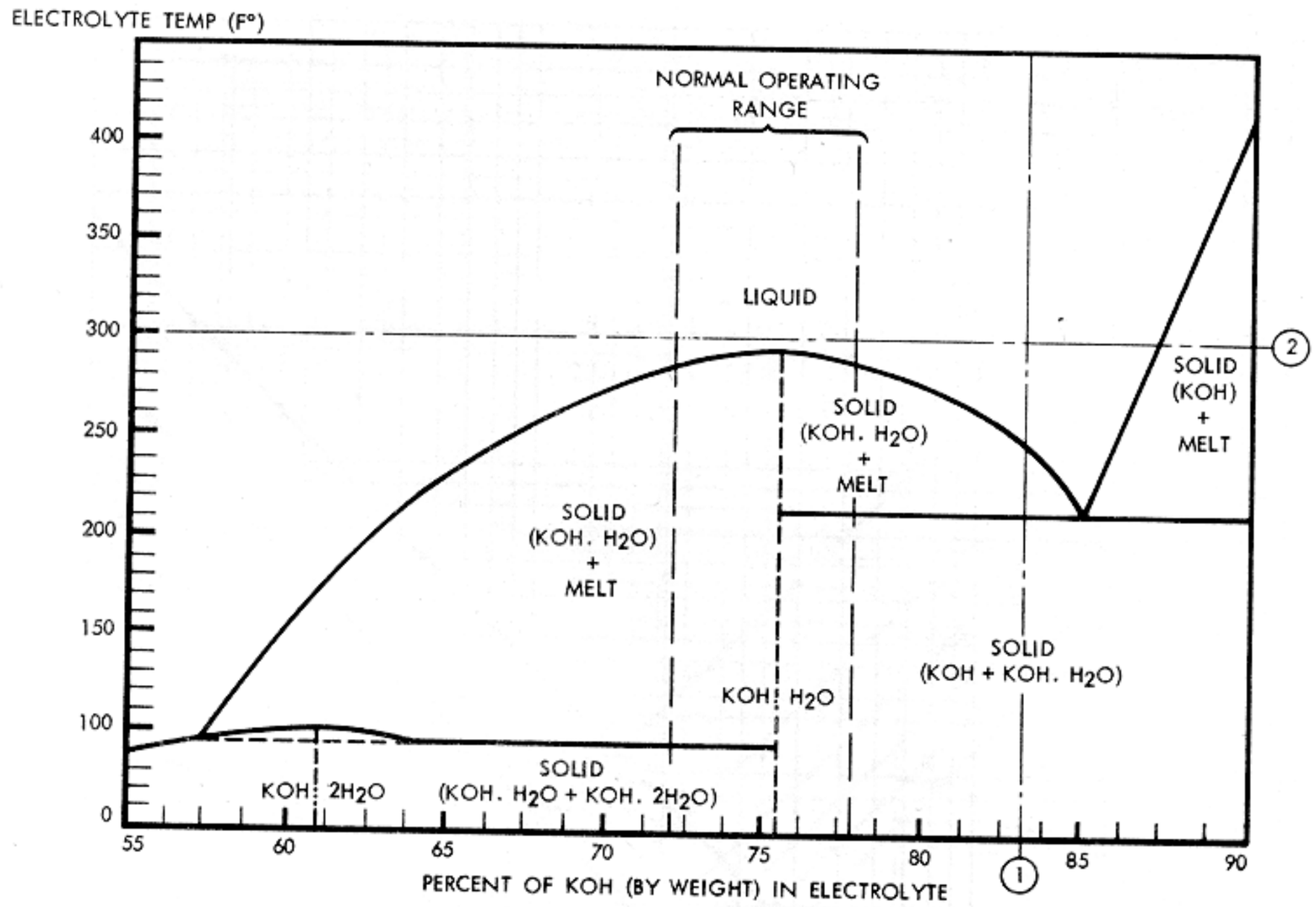

NOTES:
1. Percent (83) of KOH in electrolyte at initial fill.
2. Critical temperature (300°F) of electrolyte at which electrochemical reaction begins, on initial start-up of fuel cell.

SM-2A-883B

Figure 2.6-6. KOH H_2O Phase Diagram

purge is preceded by activation of the H_2 PURGE LINE HTR switch (MDC-3) 20 minutes prior to the purge. The purge cycle is determined by the mission power profile and gas purity as sampled after spacecraft tank fill. Figures 2.6-7 and 2.6-8 can be used to calculate the purge cycles, dependent on gas purity and load. A degradation purge can be performed if power plant current output decreases approximately 3 to 5 amps during sustained operation. The O_2 purge has more effect during this type of purge, although it would be followed by an H_2 purge if recovery to normal was not realized after performing an O_2 purge. If the pH talk back indicator (MDC-3) is activated, a hydrogen purge will not be performed on the fuel cell with the high pH. This prevents the possibility of clogging the hydrogen vent line.

2.6.3.3.2 Fuel Cell Loading.

The application and removal of fuel cell loads causes the terminal voltage to decrease and increase, respectively. A decrease in terminal voltage, resulting from an increased load, is followed by a gradual increase in fuel cell skin temperature which causes an increase in terminal voltage. Conversely, an increase in terminal voltage, resulting

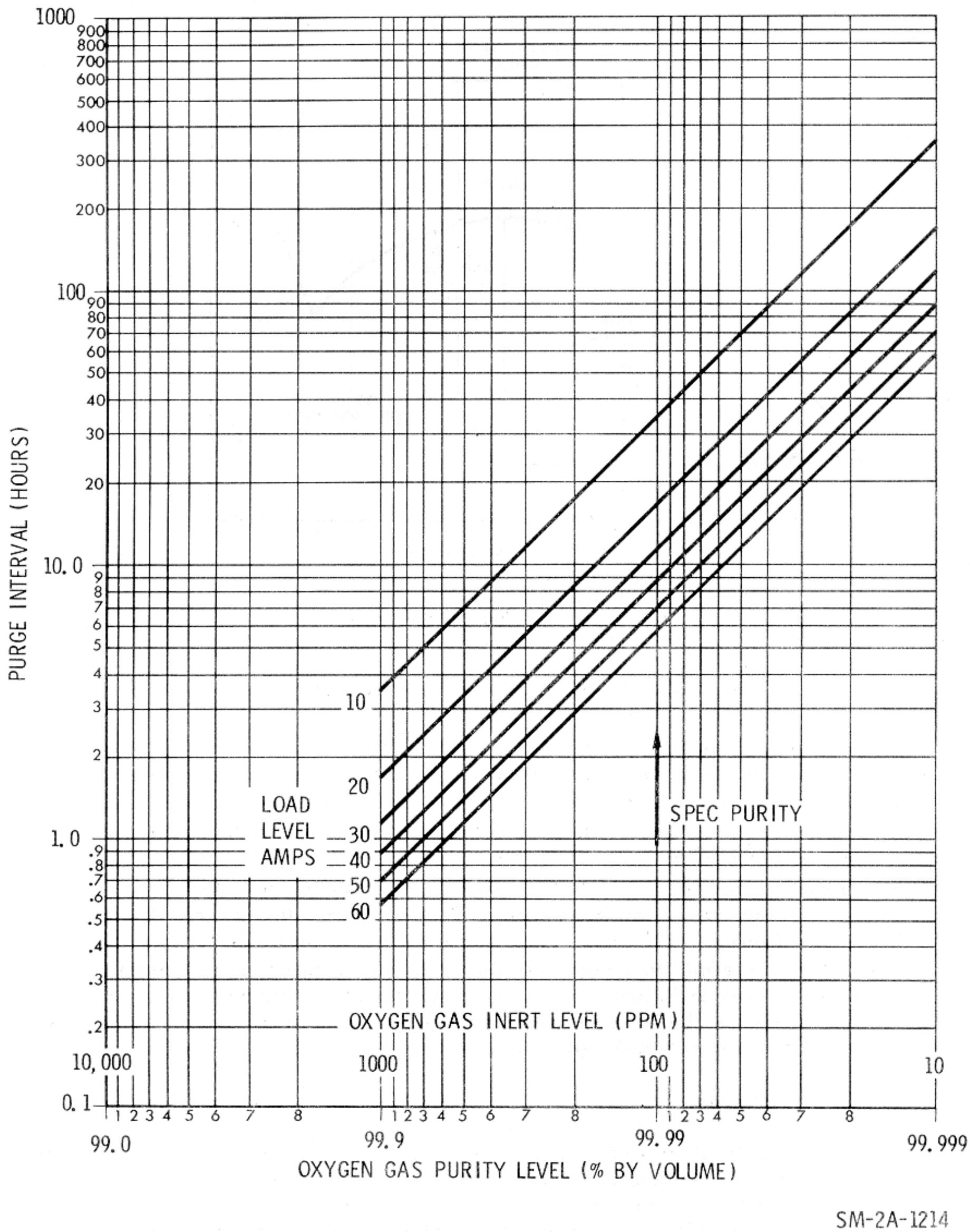

Figure 2.6-7. O_2 Gas Purity Effect on Purge Interval

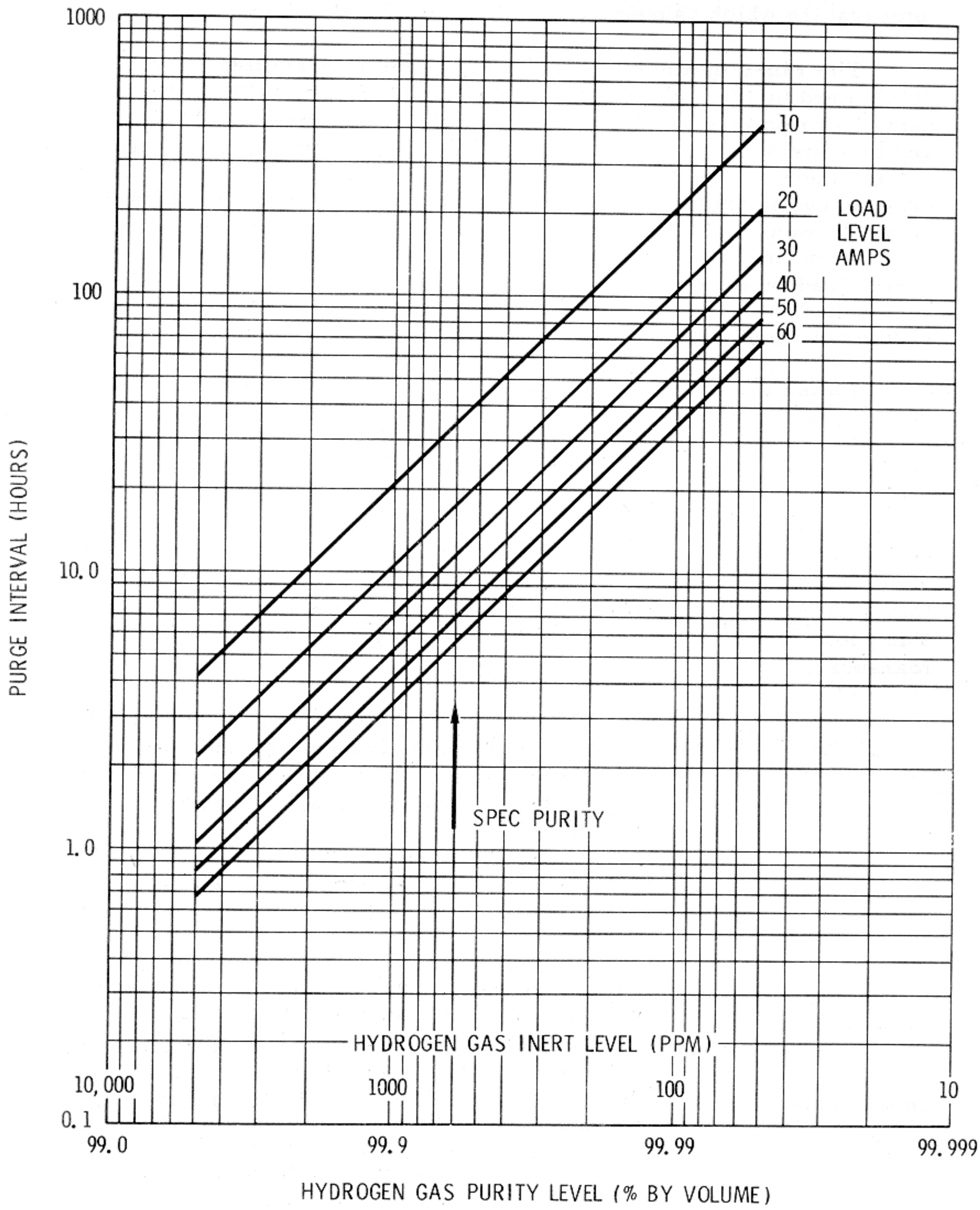

SM-2A-1215

Figure 2.6-8. H_2 Gas Purity Effect on Purge Interval

from a decreased load, is followed by a gradual decrease in fuel cell skin temperature which causes a decrease in terminal voltage.

The range in which the terminal voltage is permitted to vary is determined by the high and low voltage input design limits of the components being powered. For most components the limits are 30 volts dc and 25 volts dc. To remain within these design limits, the d-c bus voltage must be maintained between 31.0 and 26.2 volts dc. To compensate for cyclic loads, it is recommended sustained bus voltage be maintained between 26.5 and 30.0 vdc. Bus voltage is maintained within prescribed limits by the application of entry and postlanding batteries during load increases (power up). Load increase or decrease falls well within the limits of power supply capability and, under normal conditions, should not require other than normal checklist procedures.

Power Up. Powering up spacecraft systems is performed in one continuous sequence providing the main bus voltage does not decrease below 26.5 volts. If bus voltage decreases to this level, the power up sequence can be interrupted for the time required for fuel cell temperatures to increase with the resultant voltage increase or the batteries can be connected to the main buses thus reducing the fuel cell load. In most cases, powering up can be performed in one continuous sequence; however, when starting from an extremely low spacecraft load, it is probable that a power up interruption or earlier battery coupling may be required. The greatest load increase occurs while powering up for a delta V maneuver.

Power Down. Powering down spacecraft systems is performed in one continuous sequence providing the main bus voltage does not increase above 31.0 volts. Powering down from relatively high spacecraft load levels, i.e., following a delta V, the sequence may have to be interrupted for the time required for fuel cell temperature, and as a result, bus voltage to decrease. To expedite power down, one fuel cell can be disconnected from the buses increasing the loads on the remaining fuel cells and decreasing bus voltage, thus allowing continuation of the power down sequence.

Fuel Cell Disconnect. If the requirement arises to maintain a powerplant on open circuit, temperature decay would occur at an average rate of approximately 6°/hr., with the automatic in-line heater circuit activating at a skin temperature of 385°F and maintaining powerplant temperature at 385°F. In-line heater activation can be confirmed by a 4.5 to 6 amp indication as observed on the d-c amps meter (MDC-3) with the d-c indicator switch positioned to the open circuited fuel cell position. Reactant valves remain open. Fuel cell pumps can be turned off until the in-line heater circuit activates, at which time they must be on.

Closing of reactant valves during a power plant disconnect is dependent on the failure experienced. If power plant failure is such as to allow future use, i. e., shutdown due to partially degraded output, it is recommended the reactant valves remain open to provide a positive reactant pressure. The valves should be closed after power-plant skin temperature decays below 300°F. The reactant valves are closed during initial shutdown, if the failure is a reactant leak, an abnormally high regulator output pressure, or complete power-plant failure.

Prior to disconnecting a fuel cell, if a single inverter is being used, each of the remaining power plants is connected to both main d-c buses to enhance load sharing since bus loads are unbalanced. If two inverters are being used, main d-c bus loads are relatively equal; therefore, each of the remaining power plants is connected to a separate main d-c bus for bus isolation. If one power plant had been placed on open circuit for an extended period of time, prior to powering up to a configuration requiring three power plants, reconnecting is accomplished prior to the time of heavy load demands. This permits proper conditioning of the power plant which has been on open circuit. The time required for proper conditioning is a function of skin temperature increase and the load applied to the power plant.

2.6.3.4 Inverters.

Each inverter (figure 2.6-9) is composed of an oscillator, an eight-stage digital countdown section, a d-c line filter, two silicon-controlled rectifiers, a magnetic amplifier, a buck-boost amplifier, a demodulator, two d-c filters, an eight-stage power inversion section, a harmonic neutralization transformer, an a-c output filter, current sensing transformers, a Zener diode reference bridge, a low-voltage control, and an overcurrent trip circuit. The inverter normally uses a 6.4-kHz square wave synchronizing signal from the central timing equipment (CTE) which maintains inverter output at 400 Hz. If this external signal is completely lost, the free running oscillator within the inverter will provide pulses that will maintain inverter output within ±7 Hz. The internal oscillator is normally synchronized by the external pulse. The subsequent paragraphs describe the function of the various stages of the inverter.

The 6.4-kHz square wave provided by the CTE is applied through the internal oscillator to the eight-stage digital countdown section. The oscillator has two divider circuits which provide a 1600-Hz signal to the magnetic amplifier.

The eight-stage digital countdown section, triggered by the 6.4-kHz signal, produces eight 400-Hz square waves, each mutually displaced one pulse-time from the preceding and following wave. One pulse-time is 156 microseconds and represents 22.5 electrical degrees. The eight square waves are applied to the eight-stage power inversion section.

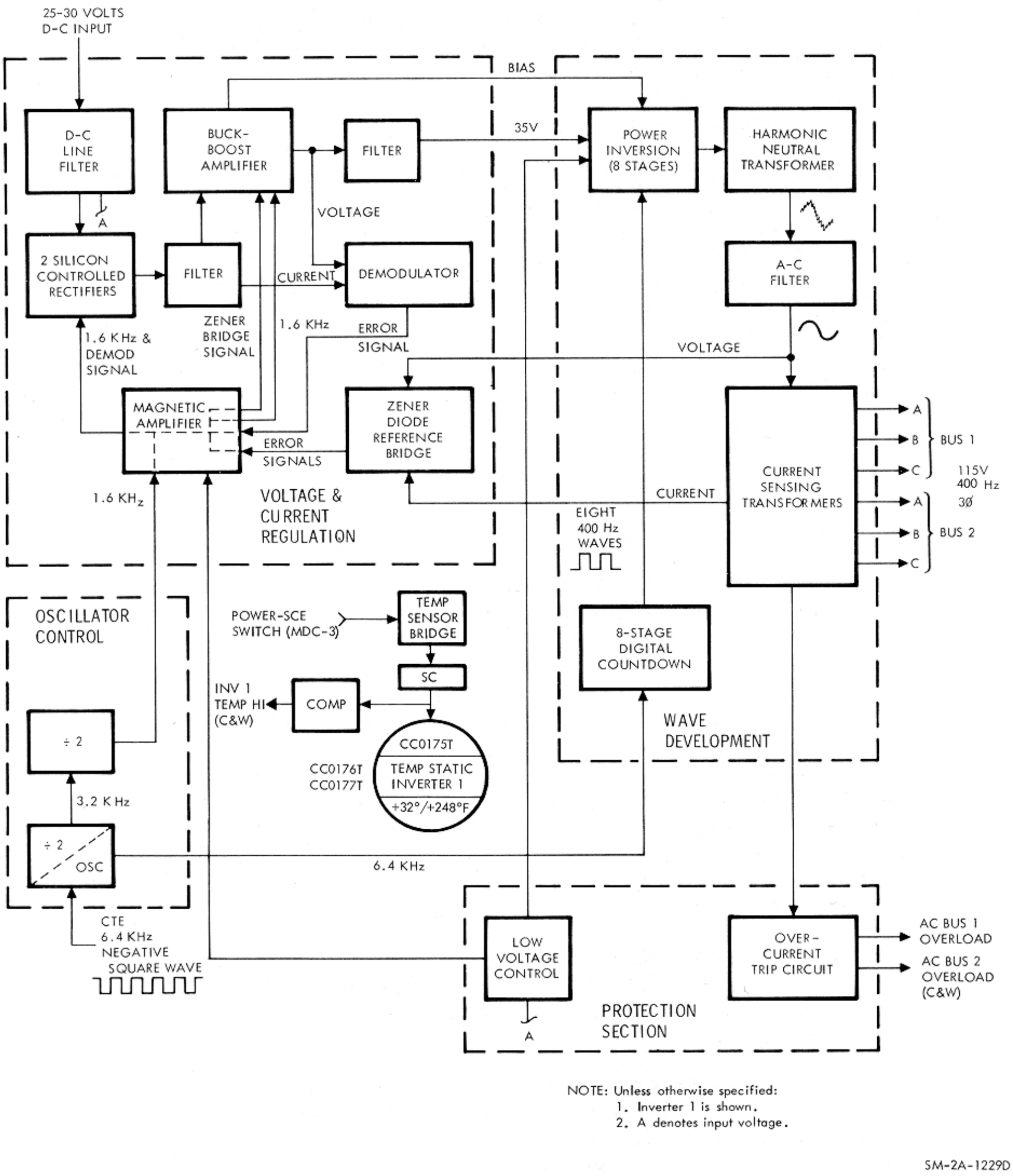

Figure 2.6-9. Inverter Block Diagram

The eight-stage power inversion section, fed a controlled voltage from the buck-boost amplifier, amplifies the eight 400-Hz square waves produced by the eight-stage digital countdown section. The amplified square waves, still mutually displaced 22.5 electrical degrees, are next applied to the harmonic neutralization transformer.

The harmonic neutralization section consists of 31 transformer windings on one core. This section accepts the 400-Hz square-wave output of the eight-stage power inversion section and transforms it into a 3-phase 400-Hz 115-volt signal. The manner in which these transformers are wound on a single core produces flux cancellation which eliminates all harmonics up to and including the fifteenth of the fundamental frequency. The 22.5-degree displacement of the square waves provides a means of electrically rotating the square wave excited primary windings around the 3-phase, wye-connected secondary windings, thus producing the 3-phase 400-Hz sine wave output. This 115-volt signal is then applied to the a-c output filter.

The a-c output filter eliminates the remaining higher harmonics. Since the lower harmonics were eliminated by the harmonic neutral transformer, the size and weight of this output filter was reduced. Circuitry in this filter also produces a rectified signal which is applied to the Zener diode reference bridge for voltage regulation. The amplitude of this signal is a function of the amplitude of a-c output voltage. After filtering, the 3-phase 115-volt a-c 400-Hz sine wave is applied to the a-c buses through individual phase current-sensing transformers.

The current-sensing transformers produce a rectified signal, the amplitude of which is a direct function of inverter output current magnitude. This d-c signal is applied to the Zener diode reference bridge to regulate inverter current output; it is also paralleled to an overcurrent sensing circuit.

The Zener diode reference bridge receives a rectified d-c signal, representing voltage output, from the circuitry in the a-c output filter. A variance in voltage output unbalances the bridge, providing an error signal of proper polarity and magnitude to the buck-boost amplifier via the magnetic amplifier. The buck-boost amplifier, through its bias voltage output, compensates for voltage variations. When inverter current output reaches 200 to 250 percent of rated current, the rectified signal applied to the bridge from the current sensing transformers is of sufficient magnitude to provide an error signal causing the buck-boost amplifier to operate in the same manner as during an overvoltage condition. The bias output of the buck-boost amplifier, controlled by the error signal, will be varied to correct for any variation in inverter voltage or a beyond tolerance increase in current output. When inverter current output exceeds 250 percent of rated current, the overcurrent sensing circuit is activated.

The overcurrent sensing circuit monitors a rectified d-c signal representing current output. When total inverter current output exceeds 250 percent of rated current, this circuit will illuminate an overload lamp in 15±5 seconds. If current output of any single phase exceeds 300 percent of rated current, this circuit will illuminate the overload lamp in 5±1 seconds. The AC BUS 1 OVERLOAD and AC BUS 2 OVERLOAD lamps are in the caution/warning matrix on MDC-2.

D-C power to the inverter is supplied from the main d-c buses through the d-c line filter. The filter reduces the high frequency ripple in the input, and the 25 to 30 volts dc is applied to two silicon-controlled rectifiers.

The silicon-controlled rectifiers are alternately set by the 1600-Hz signal from the magnetic amplifier to produce a d-c square wave with an on-time of greater than 90 degrees from each rectifier. This is filtered and supplied to the buck-boost amplifier where it is transformer-coupled with the amplified 1600-Hz output of the magnetic amplifier, to develop a filtered 35 volts dc which is used for amplification in the power inversion stages.

The buck-boost amplifier also provides a variable bias voltage to the eight-stage power inversion section. The amplitude of this bias voltage is controlled by the amplitude and polarity of the feedback signal from the Zener diode reference bridge which is referenced to output voltage and current. This bias signal is varied by the error signal to regulate inverter voltage and maintain current output within tolerance.

The demodulator circuit compensates for any low-frequency ripple (10 to 1000 Hz) in the d-c input to the inverter. The high-frequency ripple is attenuated by the input filters. The demodulator senses the 35-volt d-c output of the buck-boost amplifier and the current input to the buck-boost amplifier. An input d-c voltage drop or increase will be reflected in a drop or increase in the 35-volt d-c output of the buck-boost amplifier, as well as a drop or increase in current input to the buck-boost amplifier. A sensed decrease in the buck-boost amplifier voltage output is compensated for by a demodulator output, coupled through the magnetic amplifier to the silicon-controlled rectifiers. The demodulator output causes the SCRs to conduct for a longer time, thus increasing their filtered d-c output. A sensed increase in buck-boost amplifier voltage output, caused by an increase in d-c input to the inverter, is compensated for by a demodulator output coupled through the magnetic amplifier to the silicon-controlled rectifiers causing them to conduct for shorter periods; thus producing a lower filtered d-c output to the buck-boost amplifier. In this manner, the 35-volt d-c input to the power inversion section is maintained at a relatively constant level irrespective of the fluctuations in d-c input voltage to the inverter.

The low-voltage control circuit samples the input voltage to the inverter and can terminate inverter operation. Since the buck-boost amplifier provides a boost action during a decrease in input voltage to the inverter, in an attempt to maintain a constant 35 volts dc to the power inversion section and a regulated 115-volt inverter output, the high boost required during a low-voltage input would tend to overheat the solid state buck-boost amplifier. As a precautionary measure, the low-voltage control will terminate inverter operation by disconnecting operating voltage to the magnetic amplifier and the first power inversion stage when input voltage decreases to between 16 and 19 volts dc.

A temperature sensor with a range of +32° to +248°F is installed in each inverter and provides an input to the C&WS which will illuminate a light at an inverter overtemperature of 190°F. Inverter temperature is telemetered to MSFN.

2.6.3.5 Battery Charger.

A constant voltage, solid-state battery charger (figure 2.6-10), located in the CM lower equipment bay, is incorporated into the EPS. The BATTERY CHARGER selector switch (MDC-3) controls power input to the charger, as well as connecting the charger output to the selected battery (figure 2.6-14). When the BATTERY CHARGER selector switch is positioned to entry battery A, B, or C, a relay (K1) is activated completing circuits from a-c and d-c power sources to the battery charger. Battery charger output is also connected to the selected battery to be charged through contacts of the MAIN BUS TIE motor switch. Positioning the MAIN BUS TIE switch (A/C or B/C) to OFF for battery A or B, and both switches to OFF for battery C will disconnect main bus loads from the respective batteries and also complete the circuit from the charger to the battery.

EPS

The battery charger is provided 25 to 30 volts from both main d-c buses and 115 volts 400-Hz 3-phase from either of the a-c buses. All three phases of ac are used to boost the 25 to 30-volt d-c input and produce 40 volts dc for charging. In addition, phase A of the ac is used to supply power for the charger circuitry. The logic network in the charger, which consists of a two-stage differential amplifier (comparator), Schmitt trigger, current sensing resistor, and a voltage amplifier, sets up the initial condition for operation. The first stage of the comparator is in the on mode, with the second stage off, thus setting the Schmitt trigger first stage to on with the second stage off. Maximum base drive is provided to the current amplifier which turns the switching transistor to the on mode. With the switching transistor on, current flows from the transformer rectifier through the switching transistor, current sensing resistor, and switch choke to the battery being charged. Current lags voltage due to switching choke action. As current flow increases, the voltage drop across the sensing resistor increases, and at a specific level sets the first stage

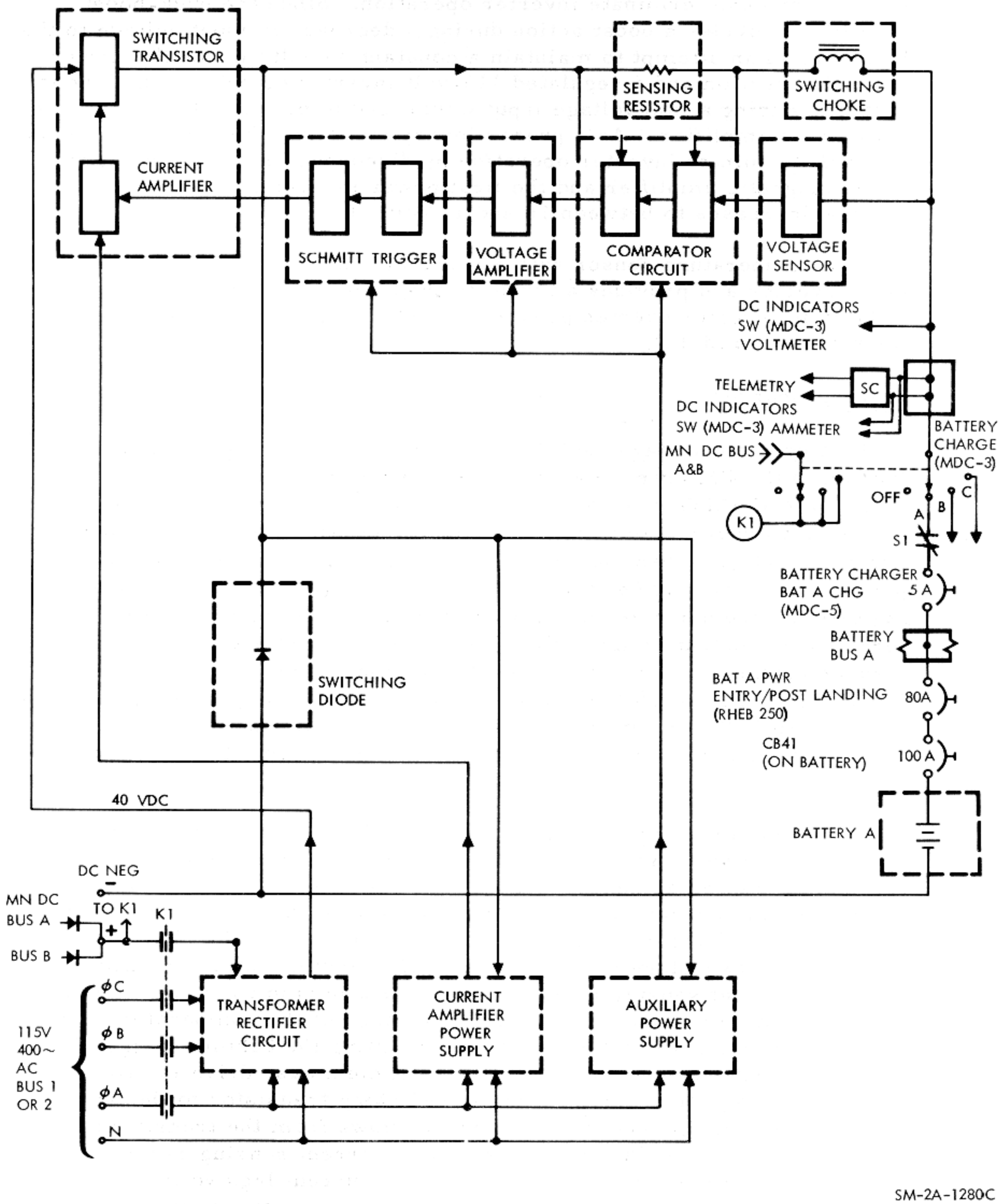

Figure 2.6-10. Battery Charger Block Diagram

of the comparator to off and the second stage to on. The voltage amplifier is set off to reverse the Schmitt trigger to first stage off and second stage on. This sets the current amplifier off, which in turn sets the switching transistor off. The switching transistor in the off mode terminates power from the source, causing the field in the choke to continue collapsing, discharging into the battery, then through the switching diode and the current sensing resistor to the opposite side of the choke. As the EMF in the choke decreases, current through the sensing resistor decreases, reducing the voltage drop across the resistor. At some point, the decrease in voltage drop across the sensing resistor reverses the comparator circuit, setting up the initial condition and completing one cycle of operation. The output load current, due to the choke action, remains relatively constant except for the small variation through the sensing resistor. This variation is required to set and reset the switching transistor and Schmitt trigger through the action of the comparator.

Battery charger output is regulated by the sensing resistor until battery voltage reaches approximately 37 volts. At this point, the biased voltage sensor circuit is unbiased, and in conjunction with the sensing resistor provides a signal for cycling the battery charger. As battery voltage increases, the internal impedance of the battery increases, decreasing current flow from the charger. At 39.8 volts, the battery is fully charged and current flow becomes negligible. (See figure 2.6-11.) Recharging the batteries until battery amp hour input equates amp hours previously discharged from the battery assures sufficient battery capacity for mission completion. The MSFN will monitor this function. If there is no contact with the MSFN, battery charging is terminated when the voltmeter indicates 39.5 vdc with the DC INDICATORS switch set to the BAT CHARGER position.

Charger voltage is monitored on the DC VOLTS METER (MDC-3). Current output is monitored on the inner scale of the DC AMPS meter (MDC-3) by placing the DC INDICATORS switch (MDC-3) to the BAT CHARGER position. Battery charger current output is telemetered to the MSFN.

When charging battery A or B, the respective BAT RLY BUS-BAT A or B circuit breaker (MDC-5) is opened to expedite recharge. During this period, only one battery will be powering the battery relay bus. Relay bus voltage can be monitored by selecting positions 4 and B on the Systems Test Meter (LEB-101) and from the couches by the Fuel Cell-Main Bus B-1 and Fuel Cell - Main Bus A-3 talk back indicators (MDC-3) which will be barber-poled. If power is lost to the relay bus, these indicators will revert to the gray condition indicating loss of power to the relay bus and requiring remedial action.

Recharge of a battery immediately after it is exposed to any appreciable loads requires less time than recharge of a battery commencing

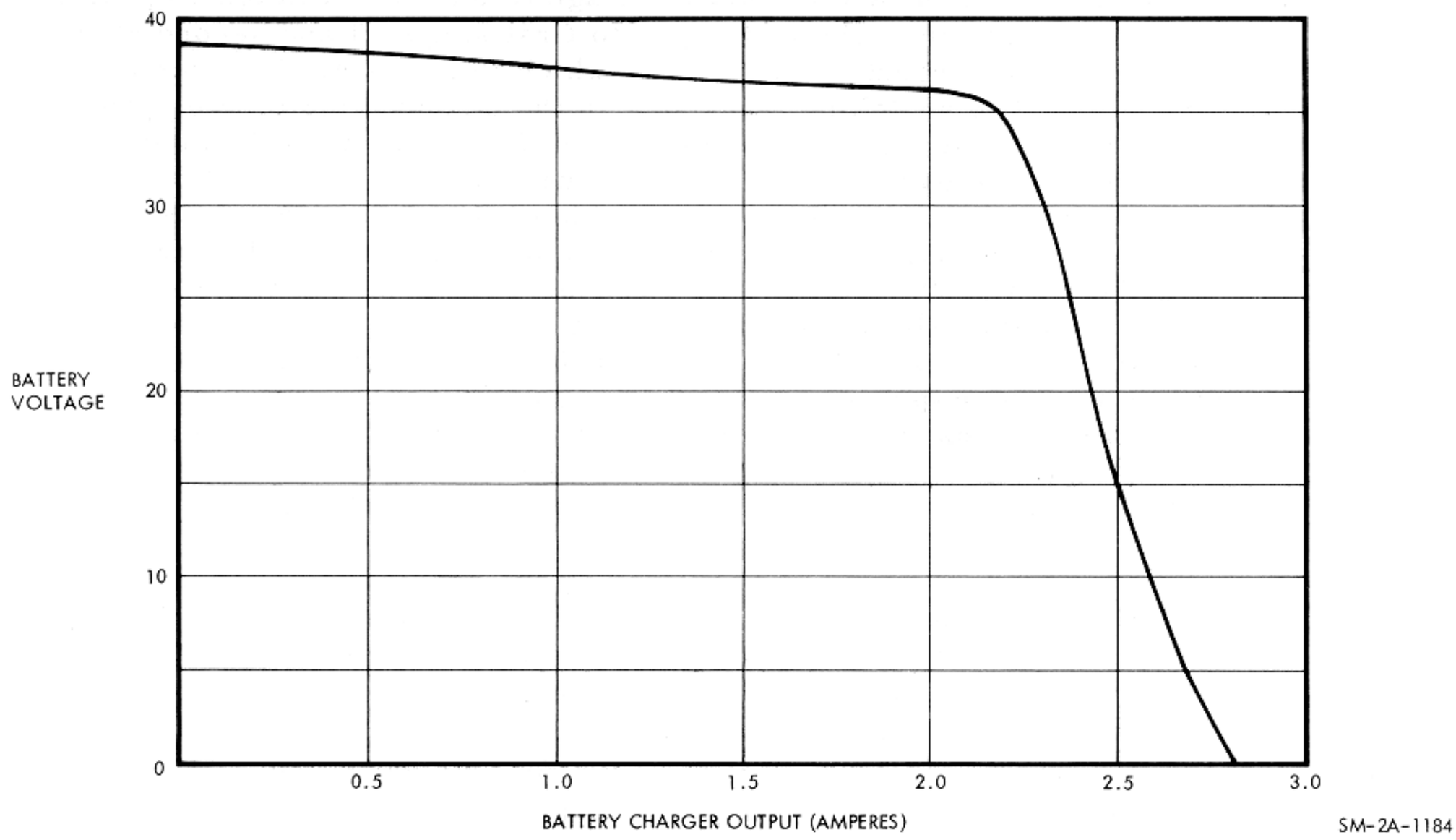

Figure 2.6-11. Battery Charger Output (Amperes)

30 minutes or more after it is disconnected from these loads. Therefore, it is advantageous to connect batteries to the charger as soon as possible after they are disconnected from the main buses since this decreases overall recharge time.

2.6.3.6 Power Distribution.

D-C and a-c power distribution to components of the EPS is provided by two redundant buses in each system. A single-point ground on the spacecraft structure is used to eliminate ground loop effects. Sensing and control circuits are provided for monitoring and protection of each system.

Distribution of d-c power (figure 2.6-12) is accomplished with a two-wire system and a series of interconnected buses, switches, circuit breakers, and isolation diodes. The d-c negative buses are connected to the vehicle ground point (VGP). The buses consist of the following:

- Two main d-c buses (A and B), powered by the three fuel cells and/or entry and postlanding batteries A, B, and C.
- Two battery buses (A and B), each powered by its respective entry and postlanding battery A and B. Battery C can power either or both buses if batteries A and/or B fail.

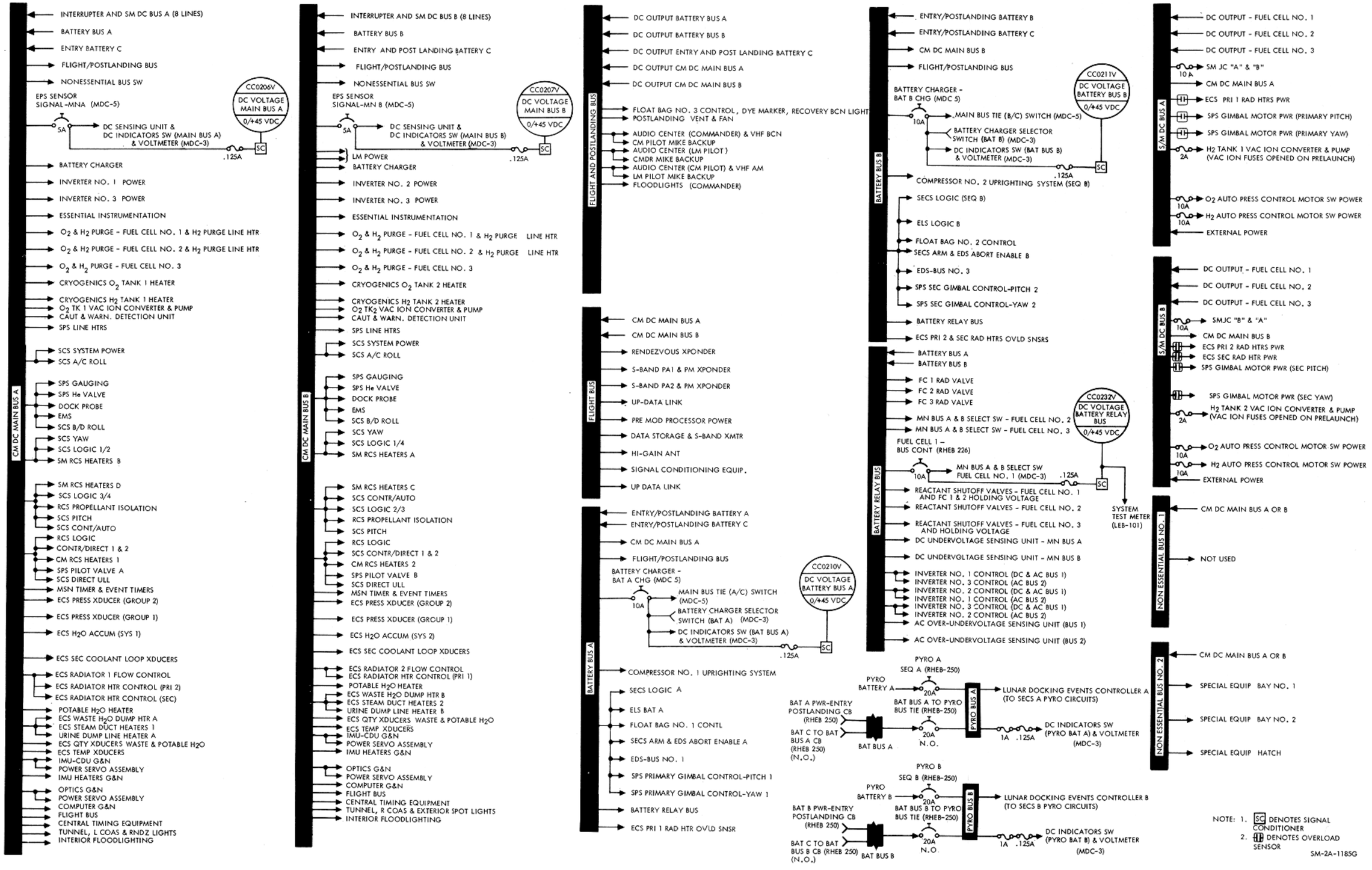

Figure 2.6-12. D-C Power Distribution

EPS

- Flight and postlanding bus, powered through both main d-c buses and diodes, or directly by the three entry and postlanding batteries, A, B, and C, through dual diodes.
- Flight bus, powered through both main d-c buses and isolation diodes.
- Nonessential bus, powered through either d-c main bus A or B.
- Battery relay bus, powered by entry and postlanding batteries through the individual battery buses and isolation diodes.
- Pyro buses, isolated from the main electrical power system when powered by the pyro batteries. A capability is provided to connect either entry battery to the A or B pyro system in case of loss of a pyro battery.
- SM jettison controllers, powered by the fuel cell power plants and completely isolated from the main electrical power system until activated during CSM separation.

Power from the fuel cell power plants can be connected to the main d-c buses through six motor switches (part of overload/reverse current circuits in the SM) which are controlled by switches in the CM located on MDC-3. Fuel cell power can be selected to either or both of the main d-c buses. Six talk back indicators show gray when fuel cell output is connected and striped when disconnected. When an overload condition occurs, the overload-reverse current circuits in the SM automatically disconnect the fuel cell power plants from the overloaded bus and provide visual displays (talk-back indicator and caution and warning lamp illumination) (FC BUS DISCONNECT) for isolation of the trouble. A reverse current condition will disconnect the malfunctioning power plant from the d-c system. D-C undervoltage sensing circuits (figure 2.6-13) are provided to indicate bus low-voltage conditions. If voltage drops below 26.25 volts d-c, the applicable d-c undervoltage light on the caution and warning panel (MDC-2) will illuminate. Since each bus is capable of handling all EPS loads, an undervoltage condition should not occur except in an isolated instance; if too many electrical units are placed on the bus simultaneously or if a malfunction exists in the EPS. A voltmeter (MDC-3) is provided to monitor voltage of each main d-c bus, the battery charger, and each of the five batteries. An ammeter is provided (MDC-3) to monitor current output of fuel cells 1, 2, 3, batteries A, B, C, and the battery charger.

During high power demand or emergencies, supplemental power to the main d-c buses can be supplied from batteries A and B via the battery buses and directly from battery C (figure 2.6-14). During entry, spacecraft power is provided by the three entry and postlanding batteries which

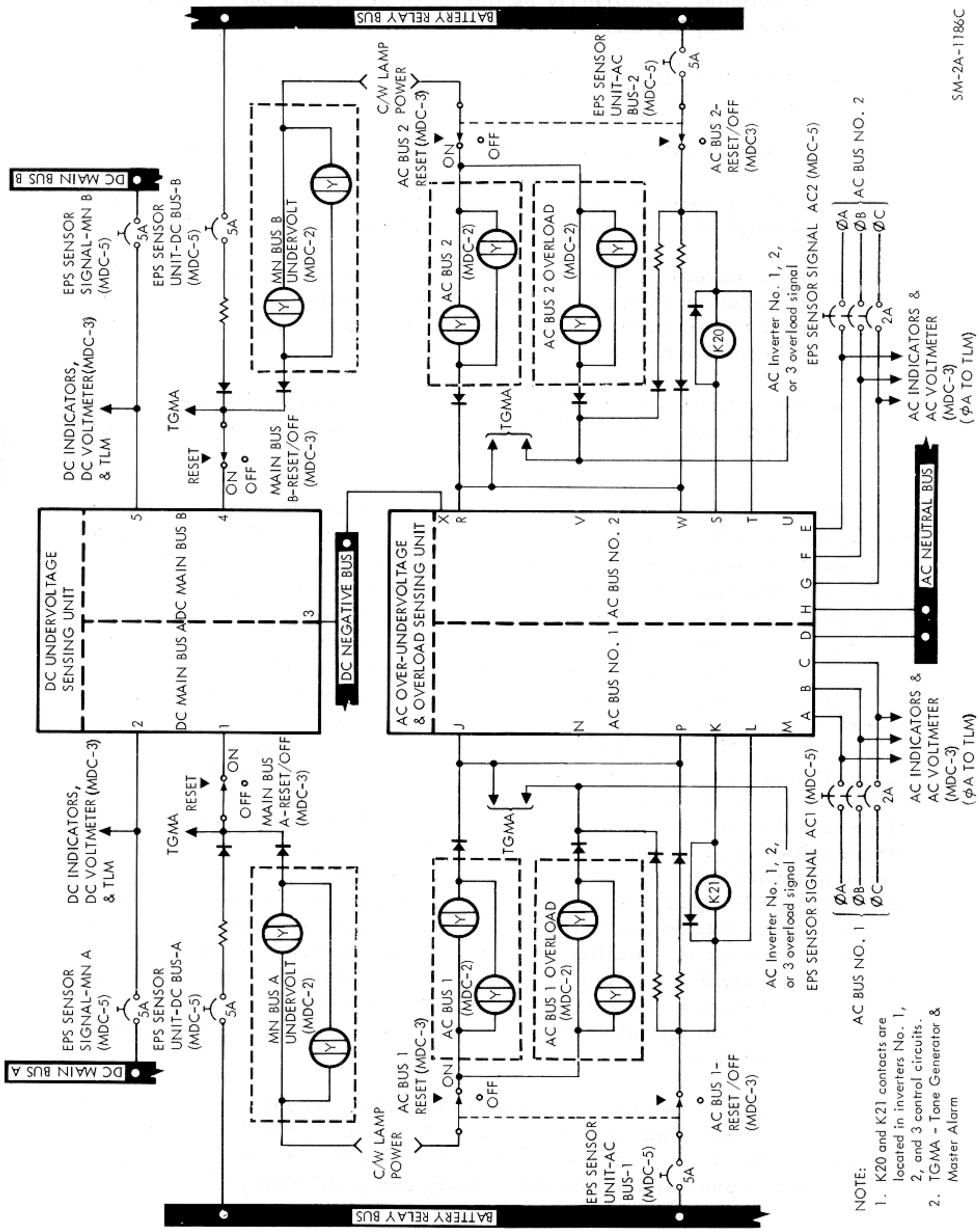

NOTE:
1. K20 and K21 contacts are located in inverters No. 1, 2, and 3 control circuits.
2. TGMA - Tone Generator & Master Alarm

Figure 2.6-13. D-C and A-C Voltage Sensing

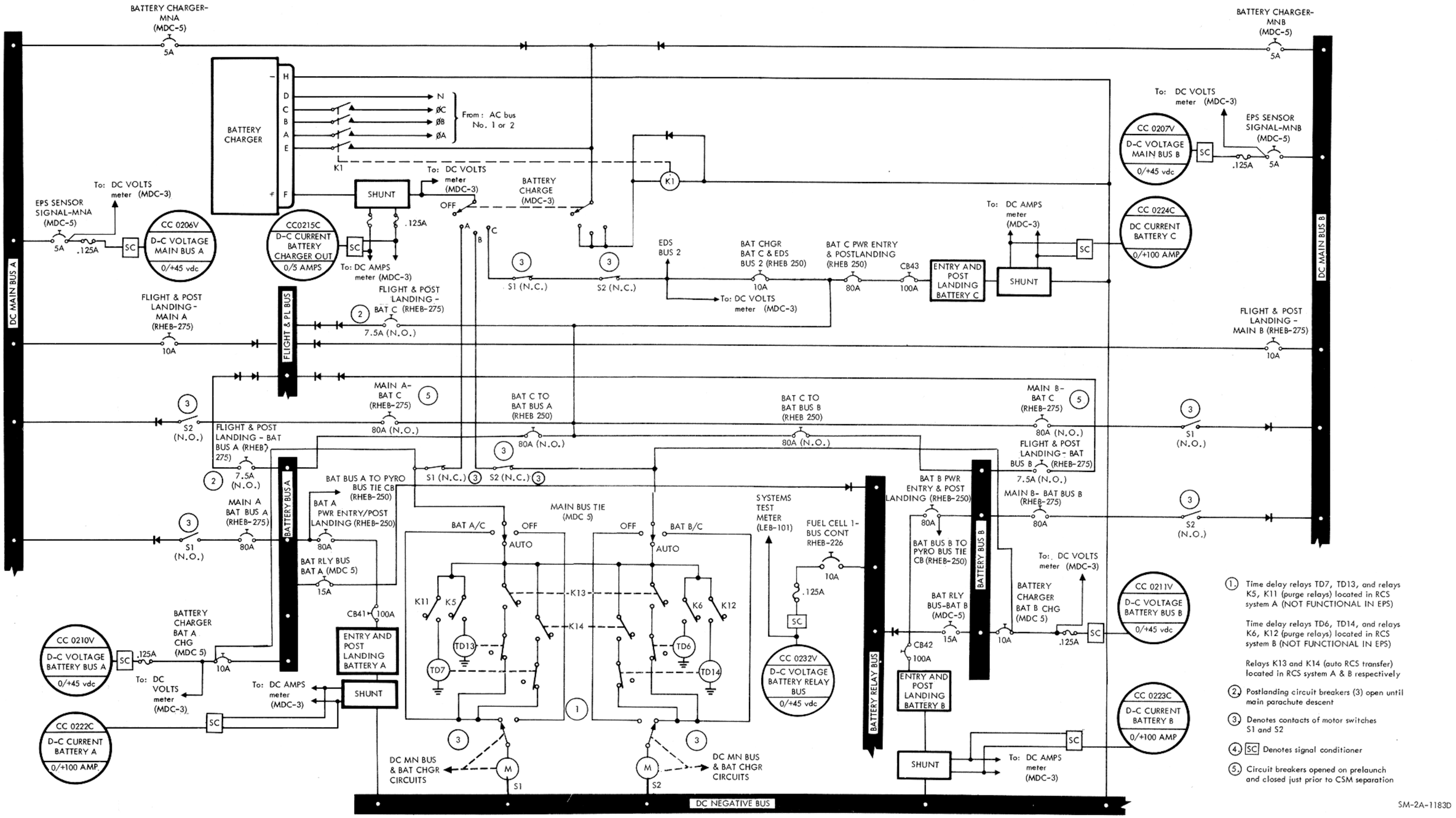

Figure 2.6-14. Battery Charger and CM D-C Bus Control Circuits

EPS

are connected to the main d-c buses prior to CSM separation; placing the MAIN BUS TIE switches (MDC-5) to BAT A/C and BAT B/C provides this function after closing the MAIN A-BAT C and MAIN B-BAT C circuit breakers (RHEB-275). The switches are manually placed to OFF after completion of RCS purge and closing the FLIGHT AND POST LDG-BAT BUS A, BAT BUS B, and BAT C circuit breakers (RHEB-275) during main chute descent. The AUTO position provides an automatic connection of the entry batteries to the main d-c buses at CSM separation. The auto function is used only on the launch pad after the spacecraft is configured for a LES pad abort.

A nonessential bus, as shown on figure 2.6-12 permits isolating nonessential equipment during a shortage of power (two fuel cell power plants out). The flight bus distributes power to in-flight telecommunications equipment. The flight and postlanding bus distributes power to some of the in-flight telecommunications equipment, float bag No. 3 controls, the ECS postlanding vent and blower control, and postlanding communications and lighting equipment. In flight, the postlanding bus receives power from the fuel cells and/or entry and postlanding batteries through the main d-c buses. After completion of RCS purge during main chute descent, the entry batteries supply power to the postlanding bus directly through individual circuit breakers. These circuit breakers (FLIGHT & POST LANDING-BAT BUS A, BAT BUS B, and BAT C – RHEB-275) are normally open in flight and closed during main chute descent just prior to positioning the MAIN BUS TIE switches to OFF.

Motor switch contacts which close when the MAIN BUS TIE switches are placed to ON, complete the circuit between the entry and postlanding batteries and the main d-c buses, and open the connection from the battery charger to the batteries. The battery relay bus provides d-c power to the a-c sensing units, the fuel cell and inverter control circuits, fuel cell reactant and radiator valves and the fuel cell-main BUS A and B talk-back indicators on MDC-3. The pyrotechnic batteries supply power to ordnance devices for separation of the LES, S-IVB, forward heat shield, SM from CM, and for deployment and release of the drogue and main parachutes during a pad abort, high-altitude abort, or normal mission progression. The three fuel cell power plants supply power to the SM jettison controllers for the SM separation maneuver.

Distribution of a-c power (figure 2.6-15) is accomplished with a four-wire system via two redundant buses, a-c bus 1 and a-c bus 2. The a-c neutral bus is connected to the vehicle ground point. A-C power is provided by one or two of the solid-state 115/200-volt 400-Hz 3-phase inverters. D-C power is routed to the inverters through the main d-c buses. Inverter No. 1 is powered through d-c main bus A, inverter No. 2 through d-c main bus B, and inverter No. 3 through either d-c main bus A or B by switch selection. Each of these circuits has a separate circuit breaker and a power control motor switch. Switches for

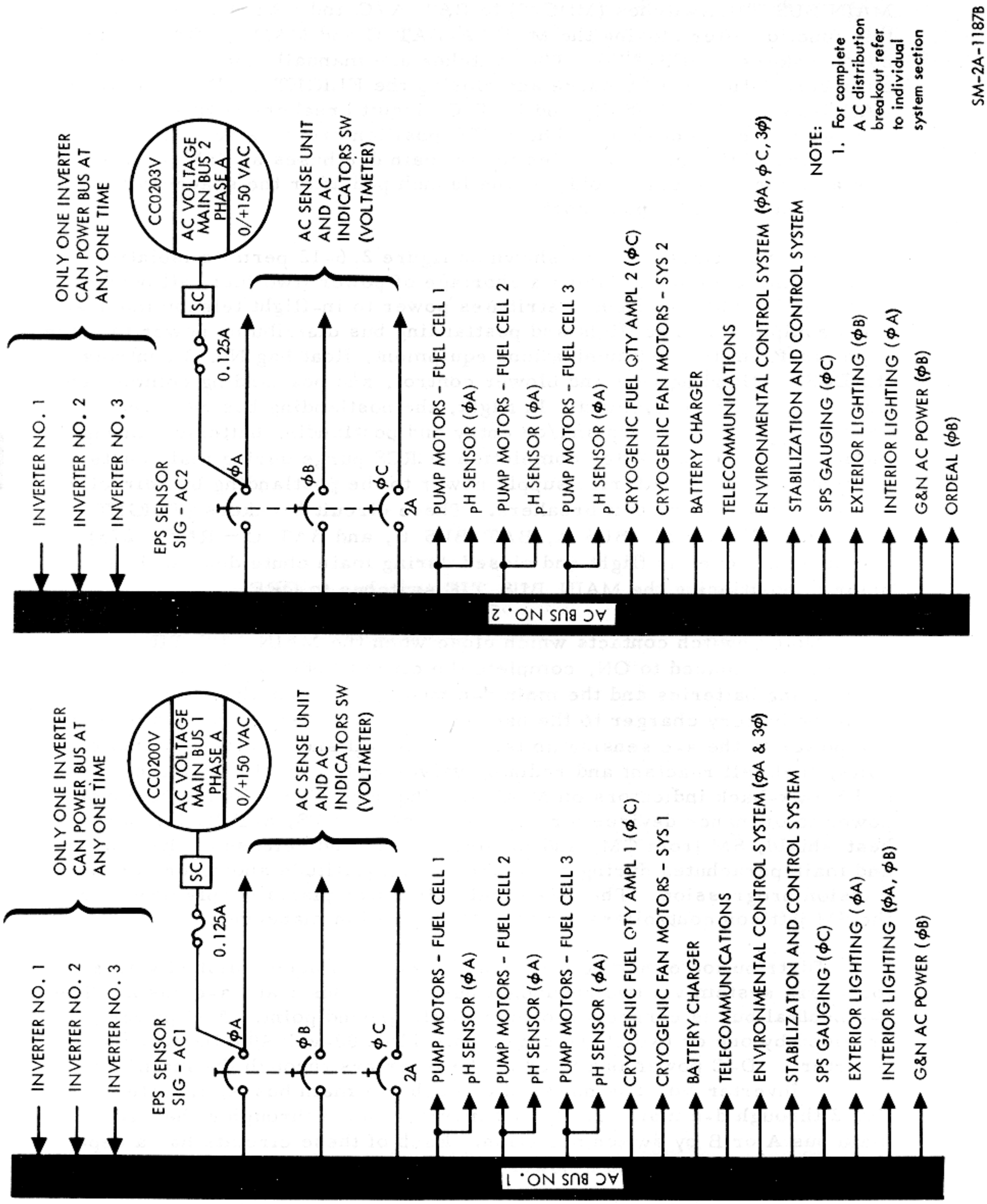

Figure 2.6-15. A-C Power Distribution

applying power to the motor switches are located on MDC-3. All three inverters are identical and are provided with overtemperature circuitry. A light indicator, in the caution/warning group on MDC-2, illuminates at 190° to indicate an overtemperature situation. Inverter output is routed through a series of control motor switches to the a-c buses. Six switches (MDC-3) control motor switches which operate contacts to connect or disconnect the inverters from the a-c buses. Inverter priority is 1 over 2, 2 over 3, and 3 over 1 on any one a-c bus. This indicates that inverter two cannot be connected to the bus until the inverter 1 switch is positioned to OFF. Also, when inverter 3 switch is positioned to ON, it will take inverter 1 off the bus before inverter 3 connection will be performed. The motor switch circuits are designed to prevent connecting two inverters to the same a-c bus at the same time. A-C loads receive power from either a-c bus through bus selector switches. In some instances, a single phase is used for operation of equipment and in others all three. Over-undervoltage and overload sensing circuits (figure 2.6-13) are provided for each bus. An automatic inverter disconnect is effected during an overvoltage. A-C bus voltage fail and overload lights in the caution/warning group (MDC-2) provide a visual indication of voltage or overload malfunctions. Monitoring voltage of each phase on each bus is accomplished by selection with the AC INDICATORS switch (MDC-3). Readings are displayed on the AC VOLTS meter (MDC-3). Phase A voltage of each bus is telemetered to MSFN stations.

Several precautions should be taken during any inverter switching. The first precaution is to completely disconnect the inverter being taken out of the circuit whether due to inverter transfer or malfunction. The second precaution is to insure that no more than one switch on AC BUS 1 or AC BUS 2 (MDC-3) is in the up position at the same time. These precautions are necessary to assure positive power transfer since power to any one inverter control motor switch is routed in series through the switch of another inverter. A third precaution must be exercised to preclude a motor switch lockout when d-c power to inverter 3 is being transferred from d-c main bus A to d-c main bus B, or vice versa. The AC INVERTER 3 switch (MDC-3) should be held in the OFF position for one second when performing a power transfer operation from one main d-c bus to the other.

2.6.4 PERFORMANCE AND DESIGN DATA.

2.6.4.1 AC and DC Data.

AC and dc performance and design data for the EPS is as follows:

AC

Phases	3
Displacement	120±2 degrees

Steady-state voltage	115.5 (+1, -1.5) vac (average 3 phases)
Transient voltage	115 (+35, -65) vac
Recovery	To 115±10v within 15 ms, steady state within 50 ms
Unbalance	2 vac (worst phase from average)
Frequency limits	
Normal (synchronized to central timing equipment)	400±3 Hz
Emergency (loss of central timing equipment)	400±7 Hz
Wave characteristics (sine wave)	
Maximum distortion	5 percent
Highest harmonic	4 percent
Crest factor	1.414±10 percent
Rating	1250 va

DC

Steady-state voltage limits	
Normal	29±2.0 vdc
Minimum CM bus	26.2 vdc
Min Precautionary CM bus	26.5 vdc (allows for cyclic loads)
Maximum CM bus	31.0 vdc
Max Precautionary CM bus	30.0 vdc (allows for cyclic loads)
During postlanding and preflight checkout periods	27 to 30 vdc
Ripple voltage	1v peak to peak

2.6.5 OPERATIONAL LIMITATIONS AND RESTRICTIONS.

2.6.5.1 Fuel Cell Power Plants.

Fuel cell power plants are designed to function under atmospheric and high-vacuum conditions. Each must be able to maintain itself at sustaining temperatures and minimum electrical loads at both

environment extremes. To function properly, fuel cells must operate under the following limitations and restrictions:

External nonoperating temperature	-20° to +140°F
Operating temperature inside SM	+30° to 145°F
External nonoperating pressure	Atmospheric
Normal voltage	27 to 31 vdc
Minimum operating voltage at terminals	
Emergency operation	20.5 vdc at 2295 watts (gross power level)
Normal operation	27 vdc
Maximum operating voltage at terminals	31.5 vdc
Fuel cell disconnect overload	75 amperes no trip, 112 amperes disconnect after 25 to 300 seconds
Maximum reverse current	1 second minimum before disconnect
Minimum sustaining power/ fuel cell power plant (with in-line heater OFF)	420 watts
In-line heater power (sustain F/C skin temp above 385°F min)	160 watts (5 to 6 amps)
Maximum gross power under emergency conditions	2295 watts at 20.5 vdc min.
Nitrogen pressure	50.2 to 57.5 psia (53 psia, nominal)
Reactant pressure	
Oxygen	58.4 to 68.45 psia (62.5 psia, nominal)
Hydrogen	57.3 to 67.0 psia (61.5 psia, nominal)

EPS

Reactant consumption/fuel cell power plant	
Hydrogen	PPH = Amps x (2.57×10^{-3})
Oxygen	PPH = Amps x (2.04×10^{-2})
Minimum skin temperature for self-sustaining operation	+385°F
Minimum skin temperature for recovery in flight	+360°F
Maximum skin temperature	+500°F
Approximate external environment temperature range outside SC (for radiation)	-260° to +400°F
Fuel cell power plant normal operating temperature range	+385° to +450°F
Condenser exhaust normal operating temperature	+150° to +175°F
Purging nominal frequency	Dependent on mission load profile and reactant purity after tank fill.
O_2 purge duration	2 minutes
H_2 purge duration	80 seconds
Additional flow rate while purging	
O_2	Up to 0.6 lb/hr
H_2	Up to 0.75 lb/hr (nominal 0.67 lb/hr)

2.6.5.2 Cryogenic Storage Subsystem.

The cryogenic storage subsystem must be able to meet the following requirements for proper operation of the fuel cell power plants and the ECS:

Minimum usable quantity	
Oxygen	320 lbs each tank (min)
Hydrogen	28 lbs each tank (min)

Temperature at time of fill	
Oxygen	-297°F (approx.)
Hydrogen	-423°F (approx.)
Operating pressure range	
Oxygen	
Normal	865 to 935 psia
Minimum	150 psia
Hydrogen	
Normal	225 to 260 psia
Minimum	100 psia
Temperature probe range	
Oxygen	-325° to +80°F
Hydrogen	-425° to -200°F
Maximum allowable difference in quantity balance between tanks	
Oxygen tanks No. 1 and 2	2 to 4%
Hydrogen tanks No. 1 and 2	3%
Pressure relief valve operation	
Crack pressure	
Oxygen	983 psig min.
Hydrogen	273 psig min.
Reseat pressure	
Oxygen	965 psig min.
Hydrogen	268 psig min.
Full flow, maximum relief	
Oxygen	1010 psig max.
Hydrogen	285 psig max.

2.6.5.3 Additional Data.

Additional data about limitations and restrictions may be found in the the CSM/LM Spacecraft Operational Data Book SNA-8-D-027, Vol I, (CSM SD68-447).

2.6.6 SYSTEMS TEST METER.

The SYSTEMS TEST meter and the alphabetical and numerical switches, located on panel 101 in the CM LEB, provide a means of monitoring various measurements within the SC, and verifying certain parameters displayed only by event indicators. The following can be measured using the SYSTEMS TEST meter, the respective switch positions, and the range of each sensor. Normal operating parameters of measurable items are covered in the telemetry listing.

SYSTEMS DATA

Systems Test Indication (Telemetry Identity and Code No.)	Switch Positions		Sensor Range
	Numerical Select	Alphabetical Select	
N_2 pressure, psia			0 to 75 psia
F/C 1 SC 2060P	1	A	
F/C 2 SC 2061P	1	B	
F/C 3 SC 2062P	1	C	
O_2 pressure, psia			0 to 75 psia
F/C 1 SC 2066P	1	D	
F/C 2 SC 2067P	2	A	
F/C 3 SC 2068P	2	B	
H_2 pressure, psia			0 to 75 psia
F/C 1 SC 2069P	2	C	
F/C 2 SC 2070P	2	D	
F/C 3 SC 2071P	3	A	
EPS radiator outlet temperature			-50° to +300°F
F/C 1 SC 2087T	3	B	
F/C 2 SC 2088T	3	C	
F/C 3 SC 2089T	3	D	
Battery manifold pressure, psia	4	A	0 to 20 psia
Batt relay bus CC0232V	4	B	0 to +45 vdc
LM power	4	D	0 to +10 amps
SPS oxidizer line temperature SP 0049T	5	A	0 to +200°F
CM-RCS oxidizer valve temperature			-50° to +50°F
-P engine, sys A CR 2100T	6	B	
+Y engine, sys B CR 2116T	5	D	
-P engine, sys B CR 2110T	5	C	
CW engine, sys B CR 2119T	6	D	
CCW engine, sys A CR 2114T	6	A	
-Y engine, sys A CR 2103T	6	C	
Pwr output	XPNDR	A	>1.0 vdc (nominal)

SYSTEMS DATA

Systems Test Indication (Telemetry Identity and Code No.)	Switch Positions		Sensor Range
	Numerical Select	Alphabetical Select	
AGC signal	XPNDR	B	Test >1.0 vdc Operate 0.0 to 4.5 vdc
Phase lockup	XPNDR	C	Locked >4.0 vdc Unlocked <0.8 vdc

NOTE

Position 7 on the numerical selector switch is an off position.

Conversion of the previously listed measurements to the SYSTEMS TEST meter indications are listed in the following chart. The XPNDR measurements are direct readouts and do not require conversion.

2.6.7 COMMAND MODULE INTERIOR LIGHTING.

The command module interior lighting system (figure 2.6-16) furnishes illumination for activities in the couch, lower equipment bay and tunnel areas, and back-lighted panel lighting to read nomenclature, indicators, and switch positions. Tunnel lighting is provided on SC which will be concerned with LM activity.

Floodlighting for illumination of work areas is provided by use of fluorescent lamps. Integral panel and numerics lighting is provided by electroluminescent materials. Tunnel lights are incandescent. Pen flashlights are provided for illuminating work areas which cannot be illuminated by the normal spacecraft systems, such as under the couches.

Electroluminescence (EL) is the phenomena whereby light is emitted from a crystalline phosphor (Z_NS) placed as a thin layer between two closely spaced electrodes of an electrical capacitor. One of the electrodes is a transparent material. The light output varies with voltage and frequency and occurs as light pulses, which are in-phase with the input frequency. Advantageous characteristics of EL for spacecraft use are an "after-glow" of less than one second, low power consumption, and negligible heat dissipation.

SYSTEMS DATA

Systems Test Meter Display	N_2, O_2, H_2 Pressure (PSIA)	EPS Radiator Outlet Temperature (°F)	CM-RCS Oxidizer Valve Temperature (°F)	LM Power (Amps)	SPS Temperature (°F)	Battery Manifold Pressure (PSIA)	Battery Relay Bus (VDC)
0.0	0	-50	-50	0	0	0.00	0
0.2	3	-36	-46	0.4	8	0.80	1.8
0.4	6	-22	-42	0.8	16	1.60	3.6
0.6	9	-8	-38	1.2	24	2.40	5.4
0.8	12	+6	-34	1.6	32	3.20	7.2
1.0	15	+20	-30	2.0	40	4.00	9.0
1.2	18	+34	-26	2.4	48	4.80	10.8
1.4	21	+48	-22	2.8	56	5.60	12.6
1.6	24	+62	-18	3.2	64	6.40	14.4
1.8	27	+76	-14	3.6	72	7.20	16.2
2.0	30	+90	-10	4.0	80	8.00	18.0
2.2	33	+104	-6	4.4	88	8.80	19.8
2.4	36	+118	-4	4.8	96	9.60	21.6
2.6	39	+132	0	5.2	104	10.40	23.4
2.8	42	+146	+4	5.6	112	11.20	25.2
3.0	45	+160	+10	6.0	120	12.00	27.0
3.2	48	+174	+14	6.4	128	12.80	28.8
3.4	51	+188	+18	6.8	136	13.60	30.6
3.6	54	+202	+22	7.2	144	14.40	32.4
3.8	57	+216	+26	7.6	152	15.20	34.2
4.0	60	+230	+30	8.0	160	16.00	36.0
4.2	63	+244	+34	8.4	168	16.80	37.8
4.4	66	+258	+38	8.8	176	17.60	39.6
4.6	69	+272	+42	9.2	184	18.40	41.4
4.8	72	+286	+46	9.6	192	19.20	43.2
5.0	75	+300	+50	10.0	200	20.00	45.0

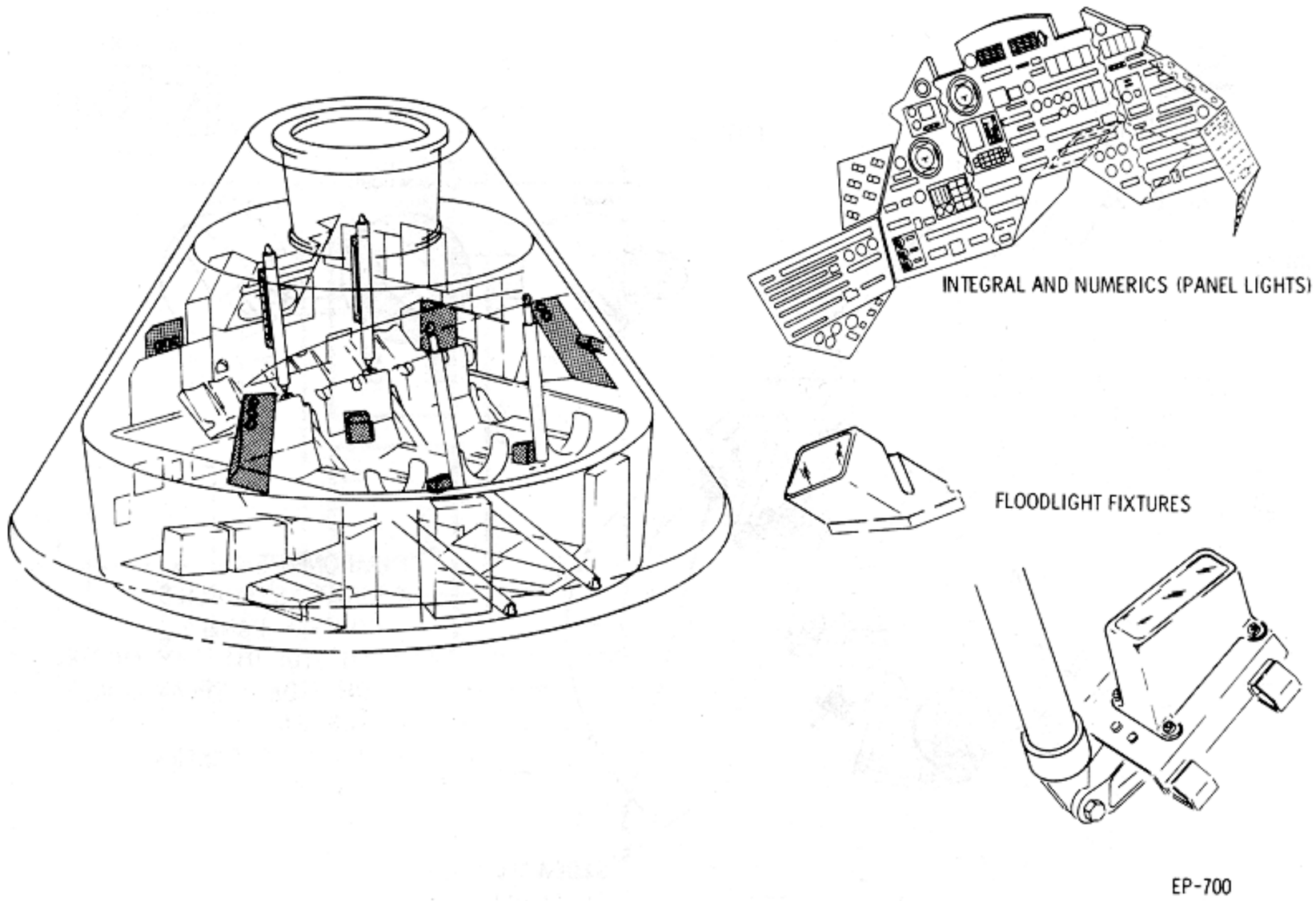

Figure 2.6-16. CM Interior Lighting

2.6.7.1 Floodlight System.

The interior floodlight system consists of six floodlight fixture assemblies and three control panels (figure 2.6-17). Each fixture assembly contains two fluorescent lamps (one primary and one secondary) and converters. The lamps are powered by 28 vdc from main d-c buses A and B (figure 2.6-18). This assures a power source for lights in all areas in the event either bus fails. The converter in each floodlight fixture converts 28 vdc to a high voltage pulsating d-c for operation of the fluorescent lamps.

Floodlights are used to illuminate three specific areas: the left main display console, the right main display console, and the lower equipment bay. Switches on MDC-8 provide control of lighting of the left main display console area. Switches on MDC-5 provide control of lighting of the right main display console area. Switches for control of lighting of the lower equipment bay area are located on LEB-100. Protection for the floodlight circuits is provided by the LIGHTING - MN A and MN B circuit breakers on RHEB-226.

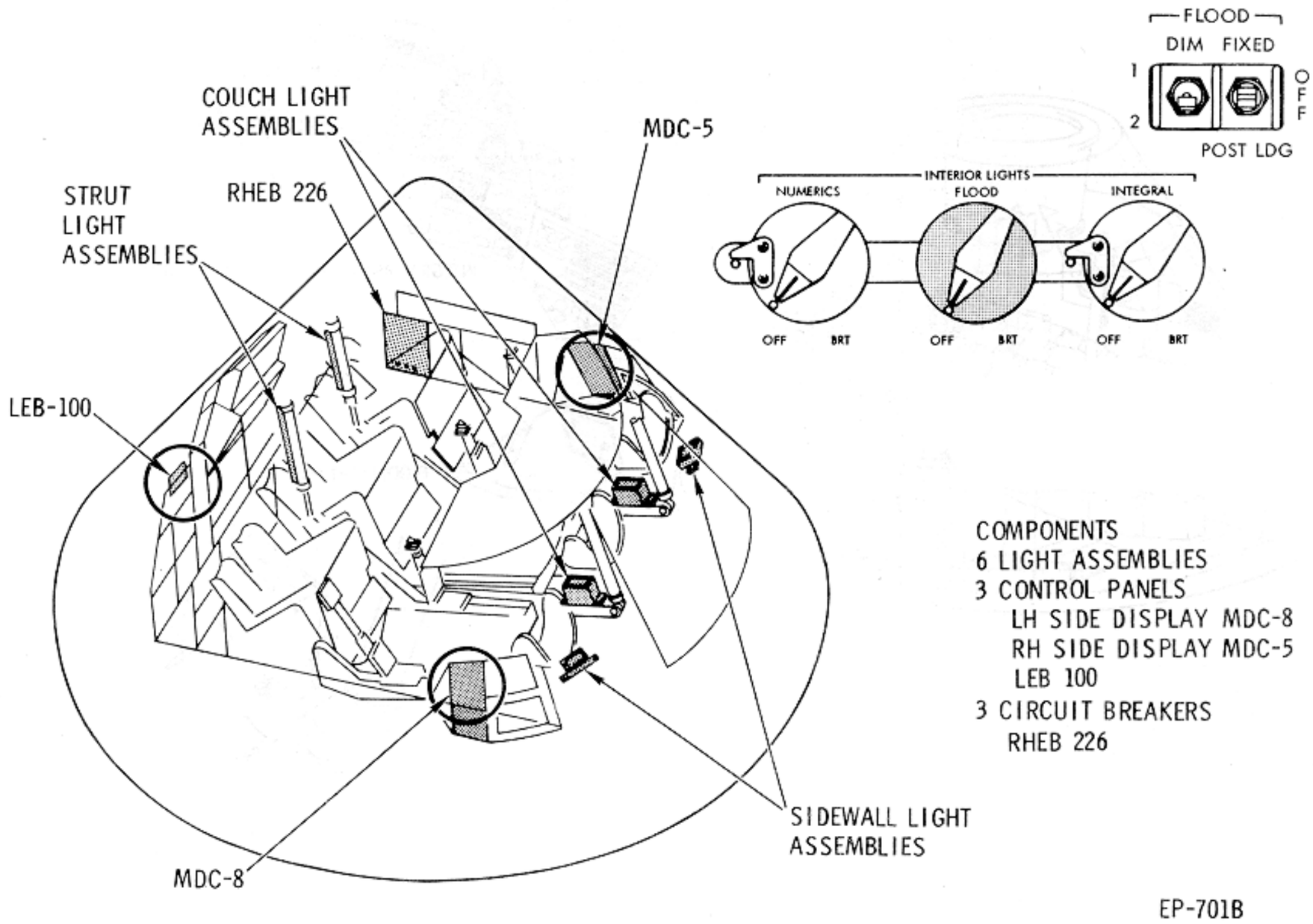

Figure 2.6-17. CM Floodlight Configuration

Each control panel has a dimming (DIM-1-2) toggle switch control, a rheostat (FLOOD-OFF-BRT) control, and an on/off (FIXED-OFF) toggle switch control. The DIM-1 position provides variable intensity control of the primary flood lamps through the FLOOD-OFF-BRT rheostat, and on-off control of the secondary lamps through the FIXED-OFF switch. The DIM-2 position provides variable intensity control of the secondary lamps through the FLOOD-OFF-BRT rheostat, and on-off control of the primary lamps through the FIXED-OFF switch. When operating the primary lamps under variable intensity control (DIM-1 position), turn on of the lamps is acquired after the FLOOD-OFF-BRT rheostat is moved past the mid point. In transferring variable intensity control to the secondary lamps, the FLOOD-OFF-BRT rheostat should first be rotated to the OFF position before placing the DIM switch to the DIM-2 position. The rheostat is then moved to the full bright setting and should remain in this position unless dimming is desired. Dimming of the secondary flood lamps should not be used unless dimming control of the primary floodlights is not available. Dimming of the secondary lamps results in approximately a 90-percent reduction in lamp life. The range of intensity variation is greater for the primary than the secondary floodlights.

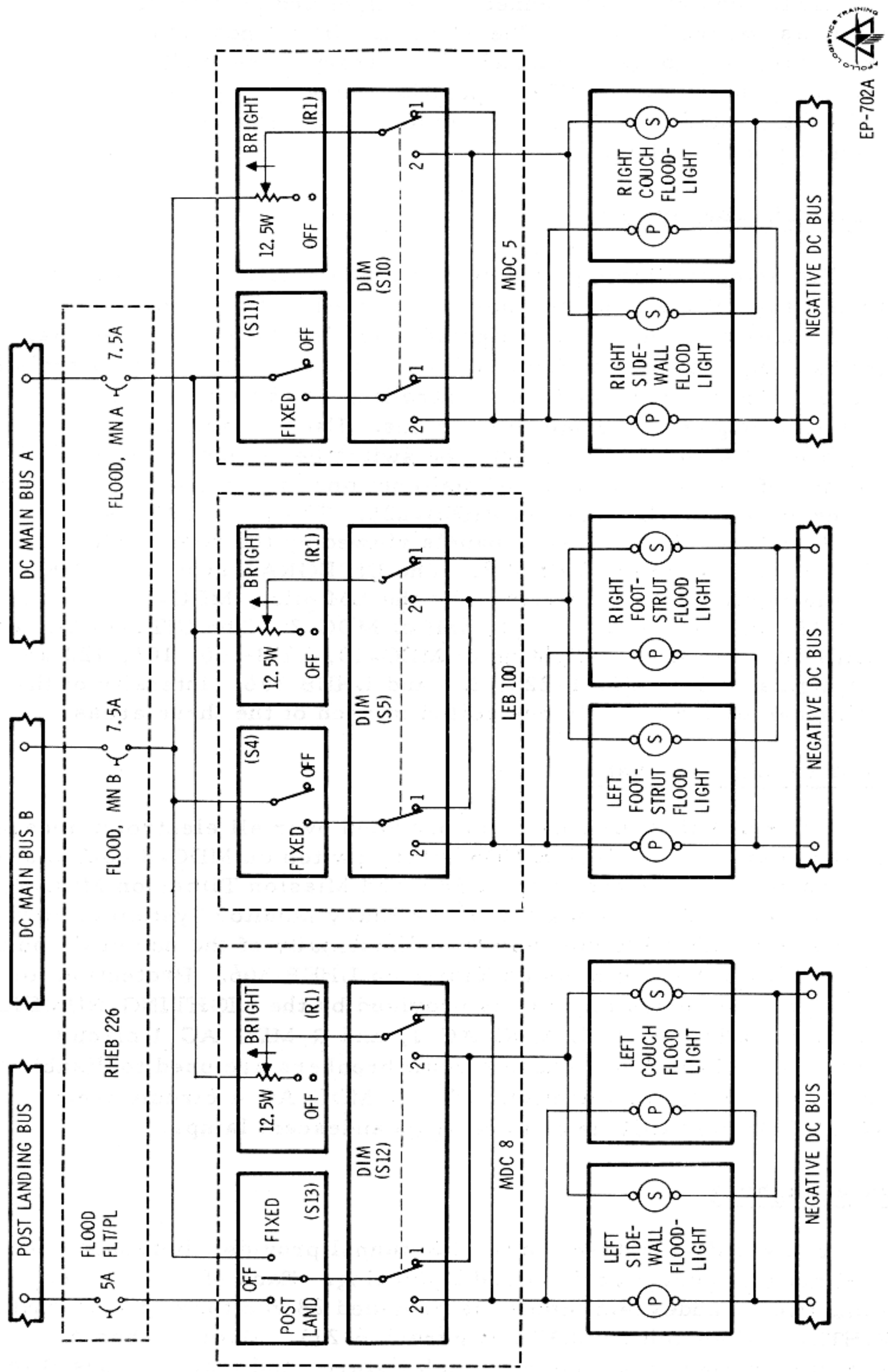

Figure 2.6-18. CM Floodlight System Schematic

EPS

The commander's control panel (MDC-8) has a POST LANDING-OFF-FIXED switch which connects the flight and post landing bus to his floodlights (figure 2.6-18). The POST LANDING position provides single intensity lighting to the commander's primary or secondary lamps as selected by the DIM-1 or DIM-2 position respectively. It is for use during the latter stages of descent after main d-c bus power is disconnected, and during post landing.

2.6.7.2 Integral Lighting System.

The integral lighting system controls the EL lamps behind the nomenclature and instrument dial faces on all MDC panels, and on specific panels in the lower equipment bay, left hand equipment bay and right hand equipment bay (figures 2.6-19 and 2.6-20). The controls (figure 2.6-19) are rotary switches controlling variable transformers powered through the appropriate a-c bus. Each rotary control switch has a mechanical stop which prevents the switch being positioned to OFF. Disabling of a circuit because of malfunctions is performed by opening the appropriate circuit breaker on RHEB-226. The INTEGRAL switch on MDC-8 controls the lighting of panels viewed by the commander, MDC-1, 7, 8, 9, 15, and the left half of 2. The INTEGRAL switch on MDC-5 controls the lighting of panels viewed by the LM pilot, MDC-3, 4, 5 and 6, 16, RHEB-229 and 275, and the right half of MDC-2. The INTEGRAL switch on LEB-100 controls the lighting of MDC-10, LEB-100, 101, 122 and the DSKY lights on 140, RHEB-225, 226 and LHEB 306. Intensity of the lighting can be individually controlled in each of the three areas.

2.6.7.3 Numerics Lighting System.

Numerics lighting control is provided over all electroluminescent digital readouts. The NUMERICS rotary switch on MDC-8 controls the off/intensity of numerals on the DSKY and Mission Timer on MDC-2, and the range and delta V indicators of the Entry Monitor System of MDC-1. The switch on LEB-100 controls the off/intensity of the numerals on the LEB-140 DSKY and the Mission Timer on LHEB-306. Protection for the integral and numerics circuits is provided by the LIGHTING-NUMERICS/INTEGRAL-LEB AC 2, L MDC AC 1, and R MDC AC 1 circuit breakers on RHEB-226. These circuit breakers are used to disable a circuit in case of a malfunction. The L MDC AC 1 circuit breakers also feed the EMS roll attitude and scroll incandescent lamps.

2.6.7.4 Tunnel Lighting.

The six light fixtures in the CM tunnel provide illumination for tunnel activity during docking and undocking. Each of the fixtures, containing two incandescent lamps, is provided 28 vdc through a TUNNEL-LIGHTS-OFF switch on MDC-2 (figure 2.6-21). Main d-c bus A distributes power to one lamp in each fixture, and main d-c bus B to the other lamp. Protection is provided by the LIGHTING/COAS/TUNNEL/RNDZ/SPOT MN A and MN B circuit breakers on RHEB-226.

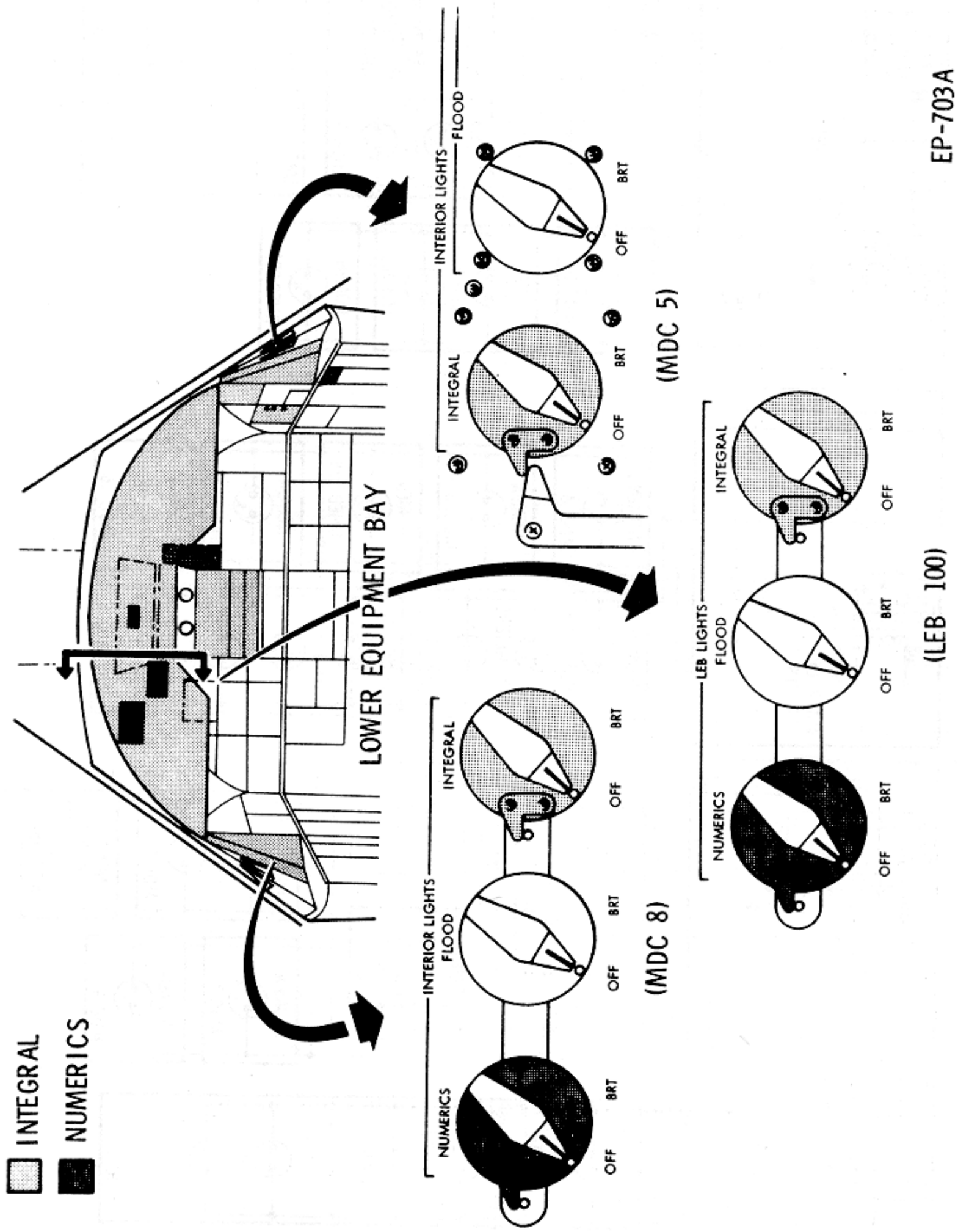

Figure 2.6-19. CM Integral/Numerics Illumination System

EPS

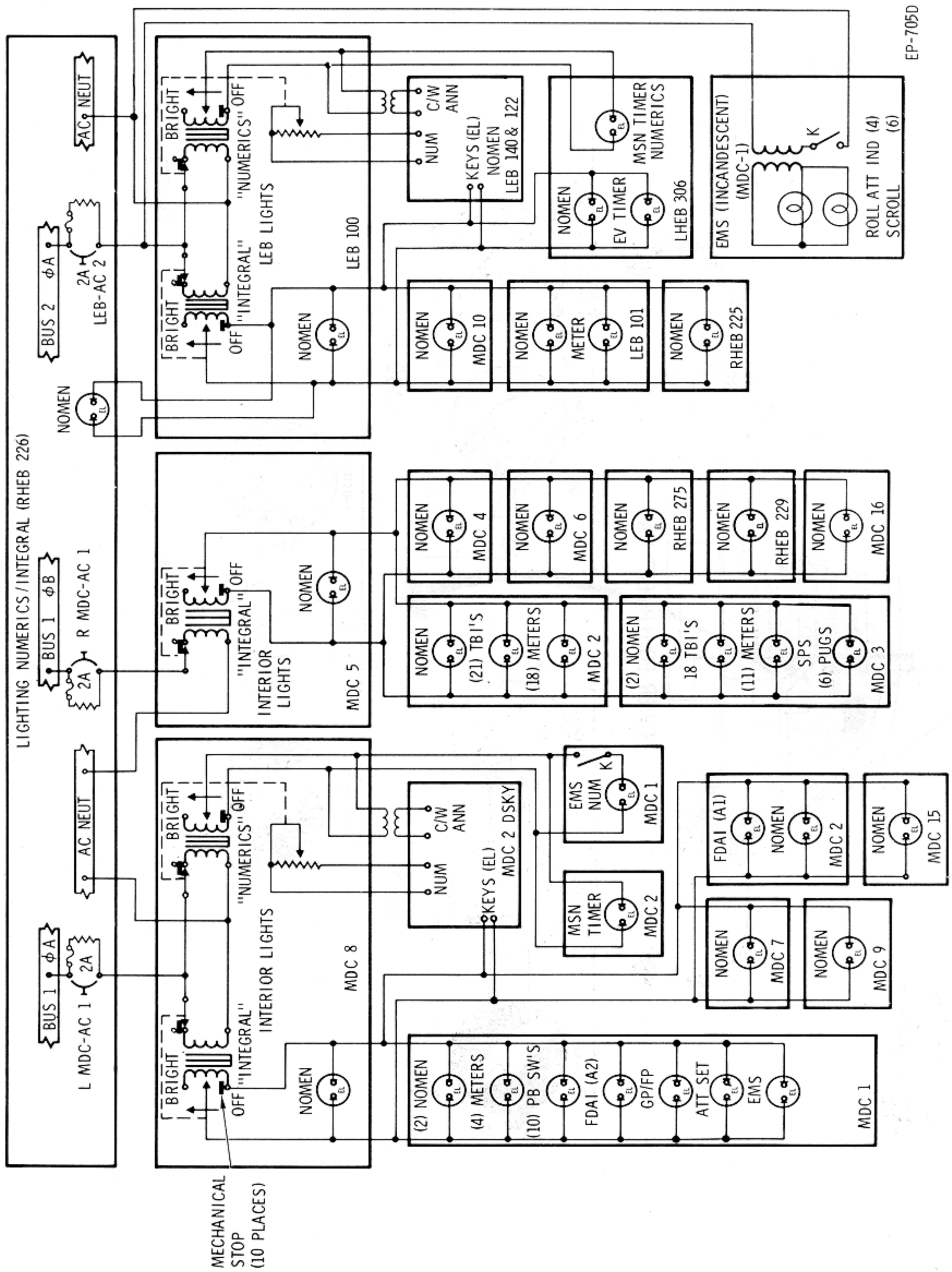

Figure 2.6-20. Integral and Numerics Panel Lighting Schematic

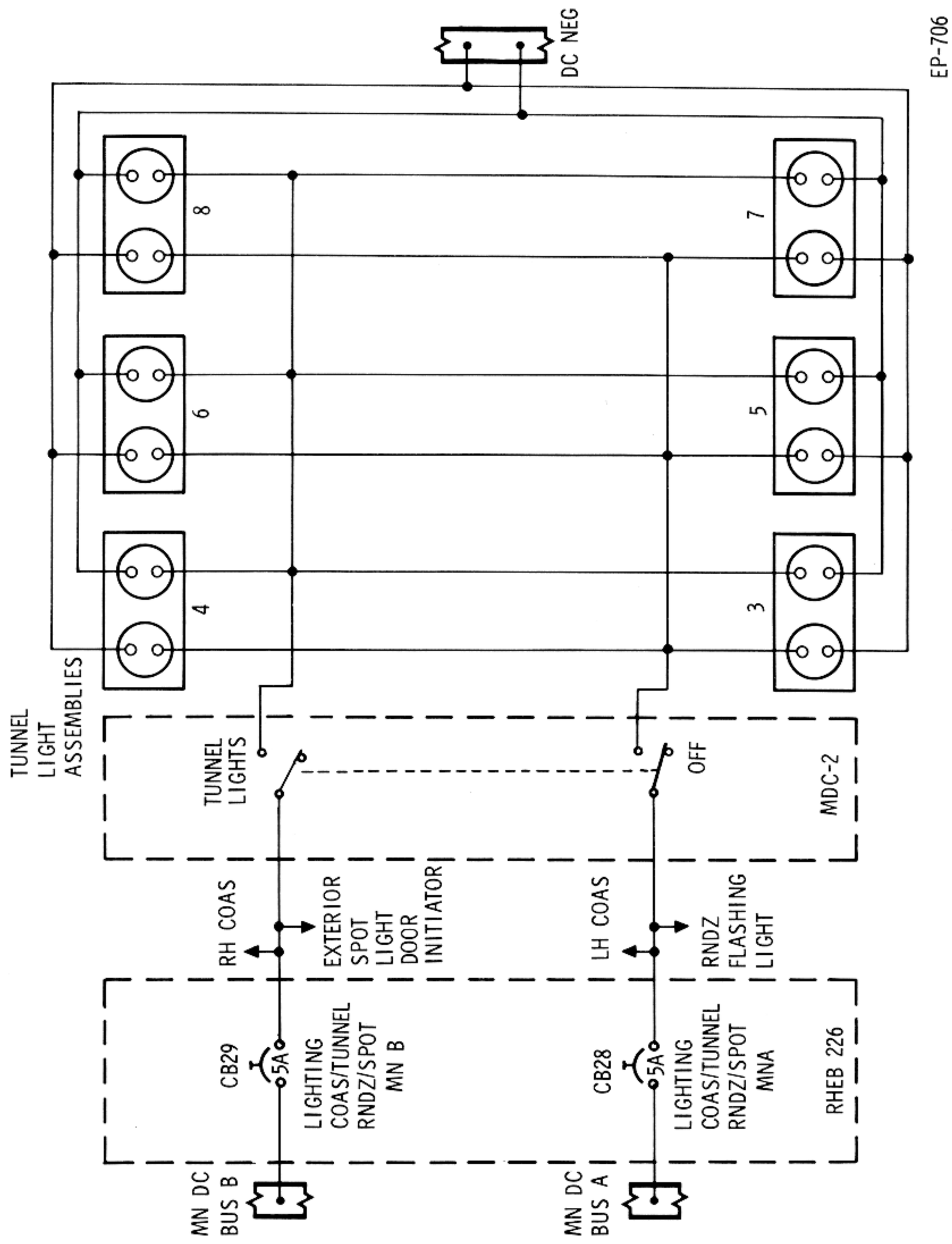

Figure 2.6-21. Tunnel Lighting Schematic

EPS

SECTION 2

SUBSECTION 2.7

ENVIRONMENTAL CONTROL SYSTEM (ECS)

2.7.1 INTRODUCTION.

The environmental control system (ECS) is designed to provide the flight crew with a conditioned environment that is both life-supporting, and as comfortable as possible. The ECS is aided in the accomplishment of this task through an interface with the electrical power system, which supplies oxygen and potable water. The ECS also interfaces with the electronic equipment of the several Apollo systems, for which the ECS provides thermal control, with the lunar module (LM) for pressurizing the LM, and with the waste management system to the extent that the water and the urine dump lines can be interconnected.

The ECS is operated continuously throughout all Apollo mission phases. During this operating period the system provides the following three major functions for the crew:

- Spacecraft atmosphere control
- Water management
- Thermal control.

Control of the spacecraft atmosphere consists of regulating the pressure and temperature of the cabin and suit gases; maintaining the desired humidity by removing excess water from the suit and cabin gases; controlling the level of contamination of the gases by removing CO_2, odors, and particulate matter; and ventilating the cabin after landing. There are provisions for pressurizing the lunar module during docking and subsequent CSM/LM operations. (Refer to subsection 2.13 for a description of the docking procedures.)

Water management consists of collecting, sterilizing, and storing the potable water produced in the fuel cells, and delivering chilled and heated water to the crew for metabolic consumption, and disposing of the excess potable water by either transferring it to the waste water system or by dumping it overboard. Provisions are also made for the collection and storage of waste water (extracted in the process of controlling humidity), delivering it to the glycol evaporators for supplemental cooling, and dumping the excess waste water overboard.

Thermal control consists of removing the excess heat generated by the crew and the spacecraft equipment, transporting it to the cab heat exchanger (if required), and rejecting the unwanted heat to space, either by radiation from the space radiators, or in the form of steam by boiling water in the glycol evaporators.

Five subsystems operating in conjunction with each other provide the required functions:

- Oxygen subsystem
- Pressure suit circuit (PSC)
- Water subsystem
- Water-glycol subsystem
- Post-landing ventilation (PLV) subsystem.

The oxygen subsystem controls the flow of oxygen within the command module (CM); stores a reserve supply of oxygen for use during entry and emergencies; regulates the pressure of oxygen supplied to the subsystem and PSC components; controls cabin pressure in normal and emergency (high flow-rate) modes; controls pressure in the water tanks and glycol reservoir; and provides for PSC purge via the DIRECT O_2 valve.

The pressure suit circuit provides the crew with a continuously conditioned atmosphere. It automatically controls suit gas circulation, pressure, and temperature; and removes debris, excess moisture, odors, and carbon dioxide from both the suit and cabin gases.

The water subsystem (potable section) collects and stores potable water; delivers hot and cold water to the crew for metabolic purposes; and augments the waste water supply for evaporative cooling. The waste water section collects and stores water extracted from the suit heat exchanger, and distributes it to the water inflow control valves of the evaporators, for evaporative cooling.

The water-glycol subsystem provides cooling for the PSC, the potable water chiller, and the spacecraft equipment; and heating or cooling for the cabin atmosphere.

The postlanding ventilation subsystem provides a means for circulating ambient air through the command module cabin after landing.

2.7.2 FUNCTIONAL DESCRIPTION.

The environmental control system operates continuously throughout all mission phases. Control begins during preparation for launch and

continues through recovery. The following paragraphs describe the operating modes and the operational characteristics of the ECS from the time of crew insertion to recovery.

2.7.2.1 Spacecraft Atmosphere Control.

During prelaunch operations the SUIT CIRCUIT RETURN VALVE is closed; and the DIRECT O_2 valve is opened slightly (approximately 0.2 pound per hour flowrate) to provide an oxygen purge of the PSC. Just before prime crew insertion the O_2 flowrate is increased to 0.6 pound per hour. This flow is in excess of that required for metabolic consumption and suit leakage. This excess flow causes the PSC to be pressurized slightly above the CM cabin. The slight overpressure maintains the purity of the PSC gas system by preventing the cabin gases from entering the PSC.

Any changes made in the pressure or composition of the cabin gas during the prelaunch period is controlled by the ground support equipment through the purge port in the CM side hatch.

As soon as the crew connects into the PSC, the suit gas becomes contaminated by CO_2, odors, moisture, and is heated. The gases are circulated by the suit compressor through the CO_2 and odor absorber assembly where a portion of the CO_2 and odors are removed; then through the heat exchanger, where they are cooled and the excess moisture is removed. Any debris that might get into the PSC is trapped by the debris trap or on felt pads on the upstream side of each LiOH cartridge.

When the crew is partially suited or in a shirtsleeve environment they contaminate the cabin gases. Since the contaminants can only be removed in the PSC, the crew must necessarily configure the PSC to allow for an adequate flow of gas out of the PSC into the cabin and back into the PSC through the suit return hoses and the SUIT CIRCUIT RETURN VALVE in order to provide the required scrubbing. This can be accomplished for the "partially suited" mode by disconnecting and installing cap screens on the return hoses and opening the SUIT CIRCUIT RETURN VALVE. For the shirtsleeve mode it can be accomplished by disconnecting the inlet hoses and placing the flow control valve in the CABIN FLOW position in addition to the preceding steps.

During the ascent, the cabin remains at sea level pressure until the ambient pressure decreases a nominal 6 psi. At that point the CABIN PRESSURE RELIEF valve vents the excess gas overboard, maintaining cabin pressure at 6 psi above ambient. As the cabin pressure decreases, a relief valve in the O_2 DEMAND REGULATOR vents suit gases into the cabin to maintain the suit pressure slightly above cabin pressure.

Sometime after attaining orbit it will be necessary to close the DIRECT O_2 valve to conserve oxygen. (Refer to Volume 2, Apollo Operations Handbook for the procedure.) After the DIRECT O_2 valve is closed, make-up oxygen for the PSC is supplied by the DEMAND REGULATOR when the SUIT CIRCUIT RETURN VALVE is closed or from the cabin via the cabin pressure regulator when the SUIT CIRCUIT RETURN VALVE is open.

During normal space operations, the cabin pressure is maintained at a nominal 5 psia by the cabin pressure regulator, at flowrates up to 1.4 pounds of oxygen per hour. In the event a high leak rate develops, the EMERGENCY CABIN PRESSURE regulator will supply oxygen at high flow rates to maintain the cabin pressure above 3.5 psia for more than 5 minutes, providing the leak is effectively no larger than a 1/2-inch hole.

When performing depressurized operations the suit circuit pressure is maintained above 3.5 psia by the O_2 DEMAND REGULATOR; the cabin pressure regulator shuts off automatically to prevent wasting oxygen.

In event of meteorite puncture during shirtsleeve operations, the EMERGENCY CABIN PRESSURE regulator will maintain the cabin pressure at a safe level until the crew can don their suits.

Prior to entry SUIT CIRCUIT RETURN VALVE is closed, isolating the suit circuit from the cabin; the O_2 DEMAND REGULATOR then controls suit pressure. Cabin pressure is maintained during the descent by the cabin pressure regulator until the ambient pressure rises to a maximum of 0.9 psi above cabin pressure. At that point the cabin relief valve will open, allowing ambient air to flow into the cabin. As the cabin pressure increases, the O_2 DEMAND REGULATOR admits oxygen into the suit circuit to maintain the suit pressure slightly below the cabin, as measured at the suit compressor inlet manifold.

After spacecraft landing, the cabin is ventilated with ambient air by postlanding ventilation fan and valves. When the CM is floating upright in the water, the POST LANDING VENT switch is placed in the HIGH (day) or LOW (night) position. Either of these positions will supply power to open both vent valves and start the fan. In the HIGH position, the fan will circulate 150 cubic feet per minute (cfm); LOW, 100 cfm.

2.7.2.2 Water Management.

In preparing the spacecraft for the mission the potable and waste water tanks are partially filled to ensure an adequate supply for the early stages of the mission. From the time the fuel cells are placed in operation until CSM separation, the fuel cells replenish the potable water

supply. A portion of the water is chilled and made available to the crew through the drinking fixture and the food preparation unit. The remainder is heated, and is delivered through a separate valve on the food preparation unit.

From the time the crew connects into the suit circuit until entry, the water accumulator pumps are extracting water from the suit heat exchanger and pumping it into the waste water system. The water is delivered to the glycol evaporators through individual water control valves. Provision is made for dumping excess waste water manually when the tank is full.

Bacteria from the waste water system can migrate through the isolating valves into the potable water system. A syringe injection system is incorporated to provide for periodic injection of bactericide to kill bacteria in the potable water system.

2.7.2.3 Thermal Control.

Thermal control is provided by two water-glycol coolant loops (primary and secondary). During prelaunch operations ground servicing equipment cools the water-glycol and pumps it through the primary loop, providing cooling for the electrical and electronic equipment, and the suit and cabin heat exchangers. The cold water-glycol is also circulated through the reservoir to make available a larger quantity of coolant for use as a heat sink during the ascent. Additional heat sink capability is obtained by selecting maximum cooling on the CABIN TEMP selector, and placing both cabin fans in operation. This cold soaks the CM interior structure and equipment. Shortly before launch, one of the primary pumps is placed in operation, the pump in the ground servicing unit is stopped, and the unit is isolated from the spacecraft system.

During the ascent the radiators will be heated by aerodynamic friction. To prevent this heat from being added to the CM thermal load, the PRIMARY GLYCOL TO RADIATORS valve is placed in the PULL TO BYPASS position at approximately 75 seconds before launch. The coolant then circulates within the CM portion of the loop.

The heat that is generated in the CM, from the time that the ground servicing unit is isolated until the spacecraft reaches 110K feet, is absorbed by the coolant and the prechilled structure. Above 110K feet it is possible to reject the excess heat by evaporating water in the primary glycol evaporator.

After attaining orbit the reservoir is isolated from the loop to maintain a reserve quantity of coolant for refilling the primary loop in case of

loss of fluid by leakage. The PRIMARY GLYCOL TO RADIATORS valve is placed in the position (control pushed in) to allow circulation through the radiators and the radiator outlet temperature sensors. If the radiators have cooled sufficiently (radiator outlet temperature is less than the inlet) they will be kept on-stream; if not, they will be bypassed until sufficient cooling has taken place. After the radiators have been placed on-stream, the glycol temperature control is activated (GLYCOL EVAP TEMP IN switch in AUTO); and the CABIN TEMP selector is positioned as desired.

The primary loop provides thermal control throughout the mission unless a degradation of system performance requires the use of the secondary loop.

Several hours before CM-SM separation the system valves are positioned so that the primary loop provides cooling for the cabin heat exchanger, the entire cold plate network, and the suit heat exchanger. The CABIN TEMP control valve is placed in the MAX COOL position, and both cabin fans are turned on to cold-soak in the CM interior structure.

Prior to separation the PRIMARY GLYCOL TO RADIATORS, and the GLYCOL TO RADIATORS SEC valves are placed in the BYPASS position to prevent loss of coolant when the CSM umbilical is cut. From that time (until approximately 110K feet spacecraft altitude) cooling is provided by water evaporation.

2.7.3 OXYGEN SUBSYSTEM.

The oxygen subsystem shares the oxygen supply with the electrical power system. Approximately 640 pounds of oxygen is stored in two cryogenic tanks located in the service module. Heaters within the tanks pressurize the oxygen to 900 psig for distribution to the using equipment.

Oxygen is delivered to the command module through two separate supply lines, each of which enters at an oxygen inlet restrictor assembly. Each assembly contains a filter, a capillary line, and a spring-loaded check valve. The filters provide final filtration of gas entering the CM. The capillaries which are wound around the hot glycol line, serve two purposes; they restrict the total O_2 flow rate to 7.5 pounds per hour maximum, and they heat the oxygen to prevent it from entering the CM in a liquid state. The check valves serve to isolate the two supply lines.

Downstream of the inlet check valves the two lines tee together and a single line is routed to the OXYGEN-S/M SUPPLY valve on panel 326. This valve is used in flight as a shutoff valve to back up the inlet check valves during entry. It is closed prior to CM-SM separation.

The outlet of the S/M SUPPLY valve is connected in parallel to the OXYGEN-SURGE TANK valve (panel 326) and to a check valve on the OXYGEN CONTROL PANEL (panel 351). The SURGE TANK valve is normally open during flight, and is closed only when it is necessary to isolate the surge tank from the system. The surge tank stores approximately 3.7 pounds of oxygen at 900 psig for use during entry, and for augmenting the SM supply when the operational demand exceeds the flow capacity of the inlet restrictors. The OXYGEN SURGE TANK PRESSURE RELIEF and shutoff valve on panel 375 prevents overpressurization of the surge tank, and provides a means for shutting off the flow in case of relief valve failure. The relief valve operates at 1045±25 psid. A pressure transducer puts out a signal proportional to surge tank pressure, for telemetry and for display to the crew. This signal shares the indicator used for displaying O_2 CRYOGENIC TANK #1 PRESSURE. The signal source is selected by the O_2 PRESS IND switch, which is located beneath the indicator on panel 2. The outlet of the check valve (on the OXYGEN CONTROL PANEL) is connected to both the OXYGEN-PLSS valve on panel 326, and the MAIN REGULATOR on panel 351.

The PLSS valve is used for controlling the flow of oxygen to and from the cabin repressurization package. The package consists of three one-pound capacity oxygen tanks connected in parallel; a toggle-type fast acting REPRESS O_2 valve on panel 601 for dumping oxygen into the cabin at very high flowrates; a toggle valve and regulator on panel 600 for supplying oxygen to the emergency O_2 face masks; a relief and shut-off valve on panel 602 to protect the package against overpressurization; and a direct-reading pressure gauge on panel 602 for monitoring package and pressure when the PLSS valve is closed. (More accurate pressure indication can be had by placing the PLSS valve in the FILL position and monitoring SURGE TANK pressure.) Opening the REPRESS O_2 valve, with the PLSS valve in the FILL position, will dump both the package tanks and the surge tanks at a rate that will pressurize the command module from 0 to 3 psia in one minute. When the PLSS valve is in the ON position, the package tanks augment the surge tank supply for entry and emergencies. The package tanks are filled by placing the PLSS valve to the FILL position, the O_2 PRESS IND switch (MDC-2) to the SURGE TANK position, and monitoring surge tank pressure on the CRYOGENIC TANKS PRESSURE O_2 1 indicator. When the indicator reads 900±35 psi, both the surge tank and package tanks are full.

THE MAIN REGULATOR reduces the supply pressure to 85-110 psig for use by the subsystem components. The regulator assembly is a dual unit which is normally operated in parallel. Two toggle valves at the inlet to the assembly provide a means of isolating either of the units in case of failure, or for shutting them both off. Integral relief valves limit the

downstream pressure to 140 psig maximum. The output of the MAIN REGULATOR passes through a flowmeter, then is delivered to the WATER & GLYCOL TANKS PRESSURE regulator, the cabin pressure regulator, EMERGENCY CABIN PRESSURE regulator (all on panel 351), the O_2 DEMAND REGULATOR (panel 380), the DIRECT O_2 valve (panel 7), and the WATER ACCUMULATOR valves (panel 382).

The output of the flowmeter is displayed on the O_2 FLOW indicator (panel 2), which has a range of 0.2 to 1.0 pound per hour. Nominal flow for metabolic consumption and cabin leakage is approximately 0.43 pound per hour. Flow rates of 1 pound per hour or more with a duration of 16.5±1.5 seconds will illuminate the O_2 FLOW HI light on the caution and warning panel (panel 2). The warning is intended to alert the crew to the fact that the oxygen flow rate is greater than is normally required. It does not necessarily mean that a malfunction has occurred, since there are a number of flight operations in which a high-oxygen flow rate is normal. These cases will be noted, when applicable, in the descriptions that follow. A pressure transducer at the outlet of the MAIN REGULATOR provides data for telemetry only.

The WATER & GLYCOL TANKS PRESSURE regulator assembly (panel 351) is a dual unit, normally operating in parallel, which reduces the 100-psi oxygen to 20±2 psig (relative to cabin) for pressurizing the positive expulsion bladders in the waste and potable water tanks, and in the glycol reservoir. Integral relief valves limit the downstream pressure to 25±2 psi above cabin pressure. INLET and OUTLET SELECTOR valves are provided for selecting either or both regulators and relief valves, or for shutting the unit off. When changing the position of the selector valves for the purpose of isolating a malfunctioning unit, it is necessary to place both selector valves in the same position in order to eliminate the possibility of cross-feeding oxygen through the outlet selector valve if it is left in the normal position. If a cross-selection is made (inlet selector to 1; outlet selector to 2, or vice versa), flow through the assembly is blocked.

The cabin pressure regulator controls the flow of oxygen into the cabin to make up for depletion of the gas due to metabolic consumption, normal leakage, or for repressurization. The assembly consists of two absolute pressure regulators operating in parallel, and a manually operated CABIN REPRESS valve. The regulator is designed to maintain cabin pressure at 5±0.2 psia at flow rates up to 1.4 pounds per hour. (O_2 FLOW HI light on.) Losses in excess of this value will result in a continual decrease in cabin pressure. When cabin pressure falls to 3.5 psia minimum, the regulator will automatically shut off to prevent wasting the oxygen supply. Following depressurization, the cabin can be repressurized by manually opening the CABIN REPRESS valve. The CABIN REPRESS valve will flow a minimum of 6 pounds per hour. The O_2 FLOW HI light will be on.

The EMERGENCY CABIN PRESSURE regulator provides emergency protection for the crew in the event of a severe leak in the cabin. The assembly consists of two absolute pressure regulators, either of which can handle the maximum flow rate, and a selector valve for selecting either or both of the regulators, or for shutting the unit off. The regulator valve starts to open when cabin pressure decreases to 4.6 psia; and at 4.2 psia the valve is full-open, flooding the cabin with oxygen. The regulator can supply oxygen to the cabin at a flow rate of 0.67 pound per minute minimum (O_2 FLOW HI light on), to prevent rapid decompression in case of cabin puncture. The regulator is capable of providing flow rates which will maintain cabin pressure above 3.5 psia for a period of 5 minutes, against a leakage rate equivalent to 1/2-inch-diameter cabin puncture. The regulator is normally used during shirt-sleeve operations, and is intended to provide time for donning pressure suits before cabin pressure drops below 3.5 psia. During pressure suit operations, the regulator is shut off to prevent unnecessary loss of oxygen in case of unplanned cabin depressurization.

The O_2 DEMAND REGULATOR (figure 2.7-1) supplies oxygen to the suit circuit whenever the suit circuit is isolated from the cabin (return air SHUTOFF VALVE closed), and during depressurized operations. It also relieves excess gas to prevent overpressurizing the suits. The assembly contains redundant regulators; a single relief valve for venting excess suit pressure; an inlet selector valve for selecting either or both regulators; and a SUIT TEST valve for performing suit integrity tests.

Each regulator section consists of an aneroid control, and a differential diaphragm housed in a reference chamber. The diaphragm pushes against a rod connected to the demand valve; the demand valve will be opened whenever a pressure differential is sensed across the diaphragm. In operation, there is a constant bleed flow of oxygen from the supply into the reference chamber, around the aneroid, and out through the control port into the cabin. As long as the cabin pressure is greater than 3.75 psia (nominal), the flow of oxygen through the control port is virtually unrestricted, so that the pressure within the reference chamber is essentially that of the cabin. This pressure acts on the upper side of the diaphragm, while suit pressure is applied to the underside of the diaphragm through the suit sense port. The diaphragm can be made to open the demand valve by either increasing the reference chamber pressure, or by decreasing the sensed suit pressure.

The increased pressure mode occurs during depressurized operations. As the cabin pressure decreases, the aneroid expands. At 3.7 psia the aneroid will have expanded sufficiently to restrict the outflow of oxygen through the control port, thus increasing the reference chamber pressure. When the pressure rises approximately 3-inch H_2O pressure above the sensed suit pressure, the demand valve will be opened.

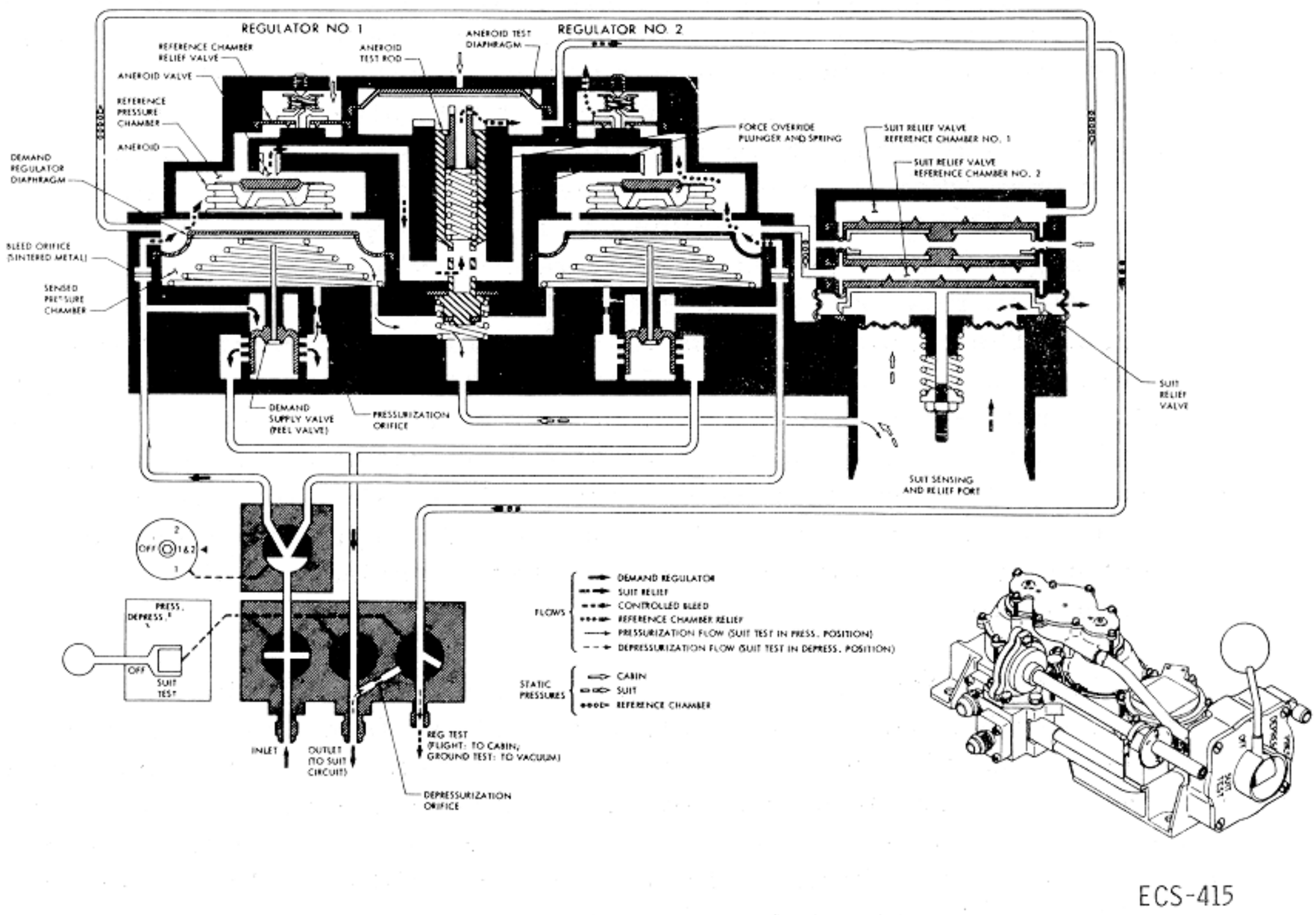

Figure 2.7-1. O_2 Demand Regulator

Decreased pressure mode occurs whenever the suit circuit is isolated from the cabin, and cabin pressure is above 5 psia. In the process of respiration, the crew will exhale carbon dioxide and water vapor. In circulating the suit gases through the CO_2 and odor absorber, and the suit heat exchanger, the CO_2 and water are removed. The removal reduces the pressure in the suit circuit, which is sensed by the regulator on the underside of the diaphragm. When the pressure drops approximately 3-inch H_2O pressure below cabin, the diaphragm will open the demand valve.

The regulator assembly contains a poppet-type relief valve which is integral with the suit pressure sense port. During operations where the cabin pressure is above 3.75 psia, the relief valve is loaded by a coil spring which allows excess suit gas to be vented whenever suit pressure rises to 2- to 9-inch H_2O above cabin pressure. When the cabin pressure decreases to 3.75 psia, the reference chamber pressure is increased by the throttling effect of the expanding aneroid. The reference chamber pressure is applied, through ducts, to two relief valve loading chambers which are arranged in tandem above the relief valve poppet. The pressure

in the loading chambers acts on tandem diaphragms which are forced against the relief valve poppet. The relief value of the valve is thus increased to 3.75 psia plus 2- to 9-inch H_2O.

The SUIT TEST valve provides a means for pressurizing and depressurizing the suit circuit, at controlled rates, for performing suit integrity tests. Placing the SUIT TEST valve in the PRESS position supplies oxygen through a restrictor to pressurize the suit circuit to a nominal 4 psi above cabin, in not less than 75 seconds. The maximum time required for pressurizing or depressurizing the suits depends upon the density of the suit and cabin gases at the time the test is performed. It will take a longer time to perform the pressurizing or depressurizing during prelaunch than in orbit because of the higher density of the gas at sea level pressure. Placing the SUIT TEST valve in the DEPRESS position will depressurize the suits in not less than 75 seconds. Moving the SUIT TEST valve from the PRESS position to OFF will dump the suit pressure immediately. Also, if any one of the three suits is vented to cabin, while the SUIT TEST valve is in the PRESS position, all three suits will collapse immediately. This is due to the restrictor in the pressurizing port, which prevents the O_2 DEMAND REGULATOR from supplying the high oxygen flow rate required for maintaining the pressure in the other two suits.

The DIRECT O_2 valve on panel 7 is a screw-actuated poppet valve capable of metering oxygen into the suit circuit of flow rates from 0 to 0.67 pound per minute (at 85 psig inlet pressure). The control end of the poppet valve is connected to a bellows assembly, which provides both the internal seal and the force required for closing the valve. When the knob is rotated counterclockwise, the screw mechanism moves inward contacting a follower on the bellows assembly forcing the poppet valve off its seat, thus opening the valve. When the knob is rotated clockwise the screw moves outward allowing the bellows assembly to close the valve. Because there is no mechanical connection between the screw and the bellows assembly, the valve will actually be closed before the screw mechanism has been rotated to the extreme clockwise position. Under average operating conditions, it will require approximately 30-degree rotation counterclockwise from the extreme clockwise position to crack the valve open.

2.7.4 PRESSURE SUIT CIRCUIT.

The pressure suit circuit (PSC) is a circulating gas loop which provides the crew with a continuously conditioned atmosphere throughout the mission. The gas is circulated through the PSC by two centrifugal compressors, which are controlled by individual switches on panel 4. Normally only one of the compressors is operated at a time; however, the individual switches provide a means for connecting either or both of the compressors to either a-c bus.

A differential pressure transducer connected between the compressor inlet and outlet manifolds provides a signal to the SUIT COMPR ΔP indicator (MDC-2); to telemetry; and to the caution and warning system, which will illuminate the SUIT COMPRESSOR light at a ΔP of 0.22 psig or less. Another differential pressure transducer connected between the compressor inlet manifold and the cabin, provides a signal to the SUIT-CAB ΔP indicator (MDC-2); and to telemetry. An absolute pressure transducer connected to the compressor inlet manifold provides a signal to the PRESS SUIT indicator (MDC-2); and to telemetry.

The gas leaving the compressor flows through the CO_2 and odor absorber assembly. The assembly is a dual unit containing two absorber elements in separate compartments with inlet and outlet manifolds common to both. A diverter valve in the inlet manifold provides a means of isolating one compartment or the other (without interrupting the gas flow) for the purpose of replacing a spent absorber. An interlock mechanism between the diverter valve handle and the cover handles is intended to prevent opening both compartments at the same time. A pressure interlock device on each canister cover extends a pin into a slot in the cover handle whenever the internal pressure is one psi above cabin pressure. A manual bleed valve on each canister cover provides a means of bleeding down the canister pressure so the cover can be opened in a depressurized cabin. The absorber elements contain lithium hydroxide and activated charcoal for removing carbon dioxide and odors from the suit gases. Orlon pads on the inlet and outlet sides trap small particles and prevent absorbent materials from entering the gas stream.

From the filter the gas flows through the suit heat exchanger where the gases are cooled and the excess moisture is removed. The heat exchanger assembly is made up of two sets of broad flat tubes through which the coolant from the primary and secondary loops can be circulated. The coolant flow/bypass is controlled by two valves located on the coolant control panel (382). The SUIT HT EXCH PRIMARY GLYCOL valve is a motor-driven valve with manual override; the motor is controlled by the SUIT CIRCUIT-HEAT EXCH switch on MDC-2. The SUIT HT EXCH SECONDARY GLYCOL valve must be positioned manually. The space between the tubes forms passages through which the suit gases flow. The coolant flowing through the tubes absorbs some of the heat from the suit gases. As the gases are cooled to about 55°F, the excess moisture condenses out and is removed from the heat exchanger by one or both of a pair of water accumulator pumps.

The water accumulators are piston-type pumps, which are actuated by oxygen pressure (100 psi) on the discharge stroke, and by a return spring for the suction stroke. The oxygen flow is controlled by the two WATER ACCUMULATOR selector valve assemblies located on the COOLANT CONTROL PANEL (382). Each valve assembly contains a selector valve, a solenoid valve, and an integral bypass. When the

selector valve is in the RMTE position, oxygen flow is controlled by the solenoid valve; when in the MAN position, the oxygen flows through the bypass directly to the pump. The solenoid valve can be controlled automatically by signals from the central timing equipment by placing the SUIT CIRCUIT-H_2O ACCUM switch (panel 2) in either AUTO 1 or AUTO 2. In the automatic mode the central timing equipment signal will cause one of the accumulators to complete a cycle every ten minutes. If it becomes necessary to cycle the accumulators at more frequent intervals the solenoid valve can be controlled manually by placing the AUTO switch in the OFF position, and placing the adjacent H_2O ACCUM switch to the ON position for either No. 1 or 2 accumulator. When exercising manual control, either by means of the switch or the selector valve, it is necessary to hold that particular control on for 10 seconds then return it to the OFF position.

The cool gas (55°F nominal) flows from the heat exchanger through the suit flow limiters and the flow control valves, into the suits. The suit temperature is measured at the heat exchanger outlet, and is displayed on the SUIT TEMP indicator (panel 2) and telemetered.

A suit flow limiter is installed in each suit supply duct to restrict the gas flow rate through any one suit. The flow limiter is a tube with a Venturi section, sized to limit flow to 0.7 pound per minute. The limiter offers maximum resistance to gas flow through a torn suit, when cabin pressure is near zero psia. The O_2 demand regulator will supply oxygen at flow rates up to 0.67 pound per minute (for at least 5 minutes) to maintain pressure in the circuit while the torn suit is being repaired.

The flow control valves (panels 300, 301, 302) are part of the suit hose connector assembly. These valves provide a means for adjusting the gas flow through each suit individually, and are fully modulating from OFF to the FULL FLOW position. When operating in a shirtsleeve environment with the inlet hose disconnected from the suit, placing the flow control valve in the CABIN FLOW position will allow approximately 12 cubic feet of suit gas per minute to flow into the cabin.

A suit flow relief valve is installed between the suit heat exchanger outlet and the compressor inlet, and is intended to maintain a relatively constant pressure at the inlets to the three suits by relieving transient pressure surges. The SUIT FLOW RELIEF valve control (panel 382) provides a means for manually closing the valve by placing the control in the OFF position. Placing the control in AUTO removes the restraint and allows the valve to operate as a relief valve. There is no provision for manually opening the valve. It is planned to place the control in the OFF position for the duration of the mission to ensure maximum flow through the SUIT CIRCUIT.

The gas leaving the suits flows through the debris trap assembly, into the suit compressor. The debris trap is a mechanical filter for screening out solid matter that might otherwise clog or damage the suit compressors. The trap consists of a stainless steel screen designed to block particles larger than 0.040 inch, and a bypass valve which will open at differential pressure of 0.5 inch H_2O in the event the screen becomes clogged.

The SUIT CIRCUIT RETURN VALVE (panel 381) is installed on the debris trap upstream of the screen. The valve permits cabin gases to enter the suit circuit for scrubbing. The valve consists of two flapper-type check valves, and a manual shutoff valve, all in series. The manual VALVE provides a means for isolating the suit circuit from the cabin manually by means of a remote control located on panel 381. This is done to prevent inducting cabin gases into the suit circuit, in the event the cabin gases become contaminated.

The SUIT CIRCUIT RETURN VALVE is located at the suit compressor inlet manifold, which is normally 1 to 2 inches of water pressure below cabin pressure. The differential pressure causes cabin gases to flow into the suit circuit when the manual valve is open. The reconditioned cabin gases are recirculated through the suits and/or cabin. During emergency operation, the check valve prevents gases from flowing into the depressurized cabin from the suit circuit.

A CO_2 sensor is connected between the suit inlet and return manifold. The output signal is delivered to the PART PRESS CO_2 indicator (panel 2); to telemetry; and to the caution and warning system. At a CO_2 partial pressure of 7.6 mm hg, the CO_2 PP HI light on panel 2 will be illuminated.

2.7.5 WATER SUBSYSTEM.

The water subsystem consists of two individual fluid management networks which control the collection storage, and distribution of potable and waste water. The potable water is used primarily for metabolic purposes. The waste water is used solely as the evaporant in the primary and secondary glycol evaporators. Although the two networks operate and are controlled independently, they are interconnected in a manner which allows potable water to flow into the waste system under certain conditions described below.

Potable water produced in the fuel cells is pumped into the CM at a flow rate of approximately 1.5 pounds per hour. The water flow through the hydrogen separator to a check valve, on the WATER CONTROL PANEL (352), and to the inlet ports of the POTABLE TANK INLET and WASTE TANK INLET valves (panel 352). The hydrogen separator consists of a series of tubes (made of 25 percent silver and 75 percent palladium) through which the water flows, encased in a can which is vented to space. Hydrogen,

in both the dissolved and free states, passes through the walls of the tubing into the can and flows overboard. The separator is installed in the right-hand equipment bay behind the waste management panel, and is connected into the system through flexible hoses and quick-disconnects, which are accessible through a door at the bottom of panel 252. The check valve at the inlet prevents loss of potable water after CM-SM separation.

The POTABLE TANK INLET is a manual shutoff valve used for preventing the flow of fuel cell water into the potable system in the event the fuel cell water becomes contaminated. The pH HI talkback (panel 3) shows a "barberpole" when the water pH factor exceeds a value of 9.

The WASTE TANK INLET is an in-line relief valve, with an integral shutoff valve. The relief valve allows potable water to flow into the waste water tank whenever the potable water pressure is 6 psi above waste water pressure. This pressure differential will occur when the fuel cells are pumping water, and either the potable water tank is full, or the POTABLE TANK INLET valve is closed; or when the waste water tank is completely empty and the glycol evaporators are demanding water for cooling. In the latter case, the water flow is only that quantity which is demanded. The shutoff valve provides a means of blocking flow in case the relief valve fails. If such a failure occurs, potable water can flow through the valve (provided the potable water pressure is higher than the waste), until the two pressures are equal. Reverse flow is prevented by a check valve downstream of the WASTE TANK INLET valve.

In the event that both water tanks are full at the time the fuel cells are pumping, the excess potable water will be dumped overboard through the PRESSURE RELIEF valve on panel 352. However, automatic dumping through the relief valve is not desirable because the pumps in both the potable and waste water systems discharge water intermittently, rather than in a steady stream. Dumping water through the relief valve in spurts results in some flash-freezing, which could result in a temporary blockage of the dump line. To preclude this the PRESSURE RELIEF valve has been modified by removing the poppet of one of the two relief valves, so that it can be used as a dump valve, to dump water in a steady stream. During flight the waste water tank quantity will be maintained below 75 percent by manually dumping the excess water. This means that normally an ullage will be maintained to receive the potable water, instead of dumping it overboard.

Water flows from the control panel to the potable water tank, the FOOD PREPARATION WATER unit (panel 305), and the water chiller. Chilled water is delivered to the FOOD PREPARATION WATER unit; and to the drinking water dispenser through the DRINKING WATER SUPPLY valve (panel 304).

The water chiller cools and stores 0.5 pound of potable water for crew consumption. The water chiller is designed to supply 6 ounces of 50°F water every 24 minutes. The unit consists of an internally baffled reservoir containing a coiled tube assembly which is used as the coolant

conduit. The baffles are used to prevent the incoming hot water from mixing with and raising the temperature of the previously chilled water.

The FOOD PREPARATION WATER unit heats potable water for use by the crew, and allows manual selection of hot or cold potable water. The cold potable water is supplied by the water chiller. The unit consists of an electrically heated water reservoir and two manually operated valves, which meter water in 1-ounce increments. The insulated reservoir has a capacity of 1.9 pounds of water. Thermostatically controlled heating elements in the reservoir heat the water and maintain it at 154°F nominal. Two metering valves dispense either hot or cold water, in 1-ounce increments, through a common nozzle. The hot water delivery rate is approximately 10 ounces every 30 minutes.

The DRINKING WATER SUPPLY valve on panel 304 provides a means for shutting off the flow of water to the drinking water dispenser (water pistol), in case of a leak in the flex hose.

The waste water and potable water is stored in positive expulsion tanks, which with the exception of capacity, are identical in function, operation, and design. The positive expulsion feature is obtained by an integrally supported bladder, installed longitudinally in the tank. Water collector channels, integral with the tank walls, prevent water from being trapped within the tank by the expanding bladder. Quantity transducers provide signals to the H_2O QUANTITY indicator on panel 2. The signal source is selected by the H_2O QTY IND switch located below and to the left of the indicator on panel 2.

Waste water extracted from the suit heat exchanger is pumped into the waste water tank, and is delivered to the EVAP WATER CONTROL-PRIMARY and -SECONDARY valves on panel 382. When the tank is full, excess waste water is dumped overboard through the water PRESSURE RELIEF valve. The EVAP WATER CONTROL valves consist of a manually operated inlet valve and a solenoid valve. When the inlet valves are in AUTO, the solenoid valves control water flow to the evaporators. The PRIMARY solenoid valve is controlled automatically when the GLYCOL EVAP-H_2O FLOW switch (panel 2) is in AUTO, and manually when the switch is ON. The SECONDARY solenoid valve is controlled automatically when the SEC COOLANT LOOP EVAP switch is in EVAP. There is no manual control provided.

2.7.6 WATER-GLYCOL COOLANT SUBSYSTEM.

The water-glycol coolant subsystem consists of two independently operated closed coolant loops. The primary loop is operated continuously throughout the mission, unless damage to the equipment necessitates shutdown. The secondary loop is operated at the discretion of the crew, and provides a backup for the primary loop. Both loops provide cooling for the suit and cabin atmospheres, the electronic equipment, and a portion of the potable water supply. The primary loop also serves as a source of heat for the cabin atmosphere when required.

2.7.6.1 Coolant Flow.

The coolant is circulated through the loops by pumping unit consisting of two pumps, a full-flow filter, and an accumulator for the primary loop; and a single pump, filter, and accumulator for the secondary loop. The purpose of the accumulators is to maintain a positive pressure at the pump inlets by accepting volumetric changes due to changes in coolant temperature. If the primary accumulator leaks, it can be isolated from the loop by means of the PRIM GLY ACCUM (panel 378). Then the reservoir must be placed in the loop to act as an accumulator. Accumulator quantity is displayed on the ACCUM PRIM/SEC indicator on panel 2. (The signal source is selected by the ECS INDICATORS rotary switch on panel 2.) The primary pumps are controlled by the ECS GLYCOL PUMPS rotary switch on panel 4, which permits either of the pumps to be connected to either a-c bus. The secondary pump is controlled by a three-position toggle switch SEC COOLANT LOOP-PUMP on panel 2, which allows the pump to be connected to either a-c bus.

The output of the primary pump flows through a passage in the evaporator steam pressure control valve to de-ice the valve throat. The coolant next flows through the GLYCOL TO RADIATORS-PRIM valve (panel 377), through the radiators, and returns to the CM. The GLYCOL TO RADIATORS-PRIM valve is placed in the BYPASS position; prior to launch to isolate the radiators from the loop, and prior to CM-SM separation to prevent loss of coolant when the CSM umbilical is cut. During space operations the valve is in the NORMAL position.

Coolant returning to the CM flows to the GLYCOL RESERVOIR valves (panel 326). From prelaunch until after orbit insertion, the reservoir INLET and OUTLET valves are open and the bypass valve is closed, allowing coolant to circulate through the reservoir. This provides a quantity of cold coolant to be used as a heat sink during the early stage of launch. After orbit insertion, the reservoir is isolated from the primary loop (by opening the BYPASS valve, and closing the INLET and OUTLET valves) to provide a reserve supply of coolant for refilling the loop in the event a leak occurs. Refilling is accomplished by means of the PRIM ACCUMR FILL valve (panel 379). Prior to entry, the reservoir is again placed in the loop.

The coolant flow from the evaporator divides into two branches. One branch carries a flow of 33 pounds per hour to the inertial measurement unit (IMU), and into the coldplate network. The other branch carries a flow of 167 pounds per hour to the water chiller, then through the SUIT HI EXCH PRIMARY GLYCOL valve (panel 382) and the suit heat exchanger to the PRIMARY CABIN TEMP control valve (panel 303).

The PRIMARY CABIN TEMP control valve routes the coolant to either the cabin heat exchanger or to the coldplate network. The valve is positioned automatically by the cabin temperature control, or manually by

means of an override control on the face of the valve. The valve is so constructed that in the cabin full cooling mode, the flow of coolant from the suit heat exchanger (167 pounds per hour) is routed first through the cabin heat exchanger and then through the thermal coldplates where it joins with the flow (33 pounds per hour) from the IMU. In the cabin full heating mode, the total flow (200 pounds per hour) is routed through the thermal coldplates first, where the water-glycol absorbs heat; from there it flows through the cabin heat exchanger. In the intermediate valve positions, the quantity of cool or warm water-glycol flowing through the heat exchanger is reduced in proportion to the demand for cooling or heating. Although the amount of water-glycol flowing through the cabin heat exchanger will vary, the total flow through the thermal coldplates will always be total system flow. An orifice restrictor is installed between the cabin temperature control valve and the inlet to the coldplates. Its purpose is to maintain a constant flow rate through the coldplates by reducing the heating mode flow rate to that of the cooling mode flow rate. Another orifice restrictor, located in the coolant line from the IMU, maintains a constant flow rate through this component regardless of system flow fluctuations. The total flow leaving the PRIMARY CABIN TEMP valve enters the primary pump and is recirculated.

The output of the secondary pump flows through a passage in the secondary evaporator steam pressure control valve for de-icing the valve throat. The coolant next flows through the GLYCOL TO RADIATORS-SEC valve (panel 377), through the radiators, and returns to the CM. The GLYCOL TO RADIATORS-SEC valve is placed in the bypass position, prior to CM-SM separation to prevent loss of coolant when the CSM umbilical is severed. After returning to the CM the coolant flows through the secondary evaporator, the SUIT HT EXCH SECONDARY GLYCOL valve, and the suit heat exchanger to the SECONDARY CABIN TEMP control valve (panel 303). The SECONDARY CABIN TEMP control valve regulates the quantity of coolant flowing through the cabin heat exchanger in the cooling mode (there is no heating capability in the secondary loop). The coolant from the secondary cabin temp control valve and/or the cabin heat exchanger then flows through redundant passages in the coldplates for the flight critical equipment and returns to the secondary pump inlet.

2.7.6.2 Glycol Temperature Control.

The heat absorbed by the coolant in the primary loop is transported to the radiators where a portion is rejected to space. If the quantity of heat rejected by the radiators is excessive, the temperature of the coolant returning to the CM will be lower than desired (45 °F nominal). If the temperature of the coolant entering evaporator drops below a nominal 43 °F, the mixing mode of temperature control is initiated. The automatic control (GLYCOL EVAP-TEMP IN switch, AUTO position) opens the PRIMARY GLYCOL EVAP INLET TEMP valve (panel 382), which allows a sufficient quantity of hot coolant from the pump to mix with the coolant returning from the radiators, to produce a mixed temperature at the inlet

to the evaporator between 43° and 48°F. There is no mixing mode in the secondary loop. If the temperature of the coolant returning from the secondary radiator is lower than 45°F nominal, the secondary radiator inlet heater will be turned on to maintain the outlet temperature between 42° and 48°F.

If the radiators fail to radiate a sufficient quantity of heat, the coolant returning to the CM will be above the desired temperature. When the temperature of the coolant entering the evaporator rises to 48° to 50.5°F, the evaporator mode of cooling is initiated. The glycol temperature control (GLYCOL EVAP-STEAM PRESS switch, AUTO position) opens the steam pressure valve allowing the water in the evaporator wicks to evaporate, using some of the heat contained in the coolant for the heat of vaporization. A glycol temperature sensor at the outlet of the evaporator controls the position of the steam pressure valve to establish a rate of evaporation that will result in a coolant outlet temperature between 38° to 45°F (an evaporator outlet temperature range of 41.5±5°F is acceptable for a period of one hour following a transition from the mixing mode of glycol temperature control to the evaporative mode). The evaporator wicks are maintained in a wet condition by the wetness control (GLYCOL EVAP-H_2O FLOW switch, AUTO position), which uses the wick temperature as an indication of water content. As the wicks become dryer, the wick temperature increases and the water control valve is opened. As the wicks become wetter, the wick temperature decreases and the water valve closes. The evaporative mode of cooling is the same for both loops, except that there is backup control for the primary loop only. The PRIMARY GLYCOL EVAP INLET TEMP valve can be positioned manually when the TEMP IN switch is in the MAN position. The steam pressure valve can be controlled remotely by placing the STEAM PRESS switch to the MAN position, and using the INCR/DECR switch to position the valve. The water control valve can be opened remotely by placing the H_2O FLOW switch to ON. The secondary evaporator is controlled automatically when the SEC COOLANT LOOP switch is in the EVAP position; placing the switch in RESET causes the control to close the secondary steam pressure valve. The OFF position removes power from the control.

2.7.6.3 ECS Radiator Control.

Each coolant loop includes a radiator circuit (figure 2.7-2). The primary radiator circuit consists basically of two radiator panels, in parallel with a flow-proportioning control for dividing the flow between them, and a heater control for adding heat to the loop. The secondary circuit consists of a series loop utilizing some of the area of both panels, and a heater control for adding heat to the loop.

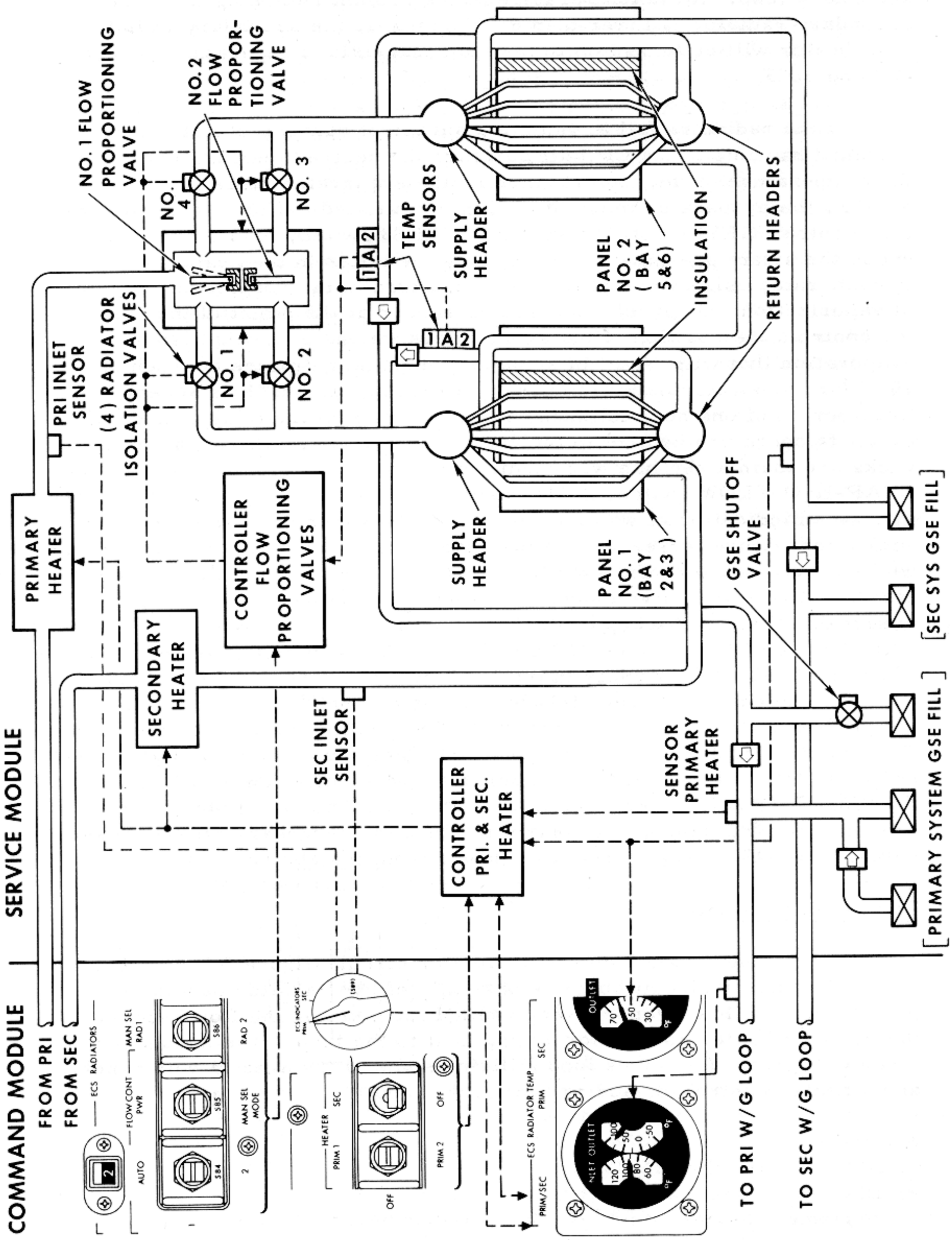

Figure 2.7-2. ECS Radiator Subsystem

The radiator panels are an integral part of the SM skin and are located on opposite sides of the SM (panel 1 in bays 2 and 3; panel 2 in bays 5 and 6). With the radiators being diametrically opposite, it is possible that one primary panel may "see" deep space while the other "sees" the sun, earth, or moon. These extremes in environments, provide for large differences in panel efficiencies and outlet temperatures. The panel seeing deep space can reject more heat than the panel receiving external radiation; therefore, the overall efficiency of the subsystem can be improved by increasing the flow to the cold panel. The higher flow rate reduces the transit time of the coolant through the radiator, which decreases the quantity of heat radiated.

Flow through the radiators is controlled by a dual flow-proportioning valve assembly, four radiator isolation valves, and a solid-state electronic controller. The flow-proportioning valve assembly (figure 2.7-3) consists of two vane-type proportioning valves each driven by an individually controlled torque motor. The assembly has a common inlet port, and each of the valves has two outlet ports, one going to the supply lines for radiator panel No. 1, and the other going to panel 2. A radiator isolation valve is installed between each of the valve outlet ports and the supply line for each

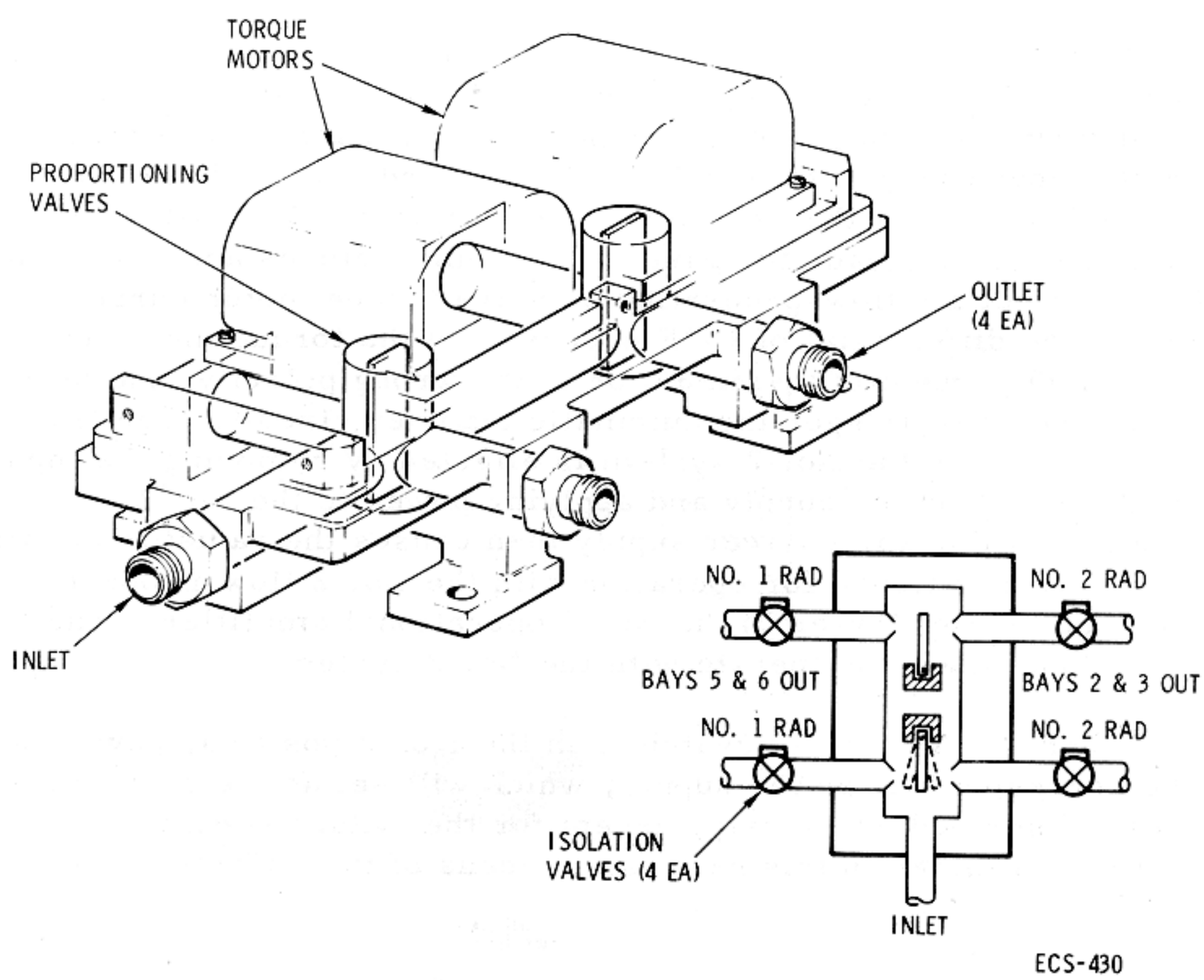

Figure 2.7-3. Space Radiators Flow Proportioning Valve

of the radiator panels. The controller not only contains the circuits for controlling the position of the flow-proportioning valves, it also contains radiator isolation valve selection logic, a failure-sensing logic, and redundant power supplies.

Power is supplied to the controller through the two FLOW CONT switches in the ECS RADIATORS switch group on panel 2. Placing the PWR-MAN SEL MODE switch in the PWR position, routes d-c power to the AUTO-1-2 switch, which is used for selecting the operating mode of the controller. When the AUTO-1-2 switch is placed in the AUTO position, and the PWR-MAN SEL MODE switch is in PWR, 28 vdc is applied to the No. 1 power supply of the controller through the internal automatic transfer circuit. The output of the power supply goes to the No. 1 operational amplifier which controls the No. 1 flow-proportioning valve; the failure sensing logic circuit, which controls the electrical state of the auto transfer circuit; and to the control circuit for the four radiator isolation valves, which will position the valves for operation on the No. 1 flow-proportioning system. Three temperature sensors are located in the outlet line from each of the primary radiator panels. The first pair of sensors are connected to the temperature bridge of the No. 1 operational amplifier, the second pair to the No. 2 amplifier, and the third pair to the failure-sensing logic amplifier.

During operation, if a difference in radiator panel outlet temperature occurs, the flow-proportioning valve will be positioned to increase the coolant flow to the cooler radiator panel. At a temperature differential of 10°F the flow-proportioning valve will be "hard over," diverting approximately 95 percent of the flow to the cold radiator. The failure-sensing logic is monitoring radiator panel outlet temperatures and the magnitude and polarity of the flow-proportioning valve torque motor current. If a temperature differential of 15°F occurs, and the torque motor current is less than 90 percent of maximum or of the wrong polarity, the failure-sensing logic will trigger the automatic transfer circuit. The transfer from the No. 1 to the No. 2 system is effected by removing the input power from the No. 1 power supply and applying power to the No. 2 power supply. The output of the No. 2 power supply then causes the radiator isolation valves to be positioned for operation with the No. 2 flow-proportioning valve, and applies power to the No. 2 operational amplifier. The failure-sensing logic does not operate with the No. 2 system.

When the AUTO-1-2 switch is in the 1 or 2 position, power is applied to the corresponding power supply, which will set up the system for operation as described previously, except for the failure sensing and transfer circuits. Transfer in this case is by means of the AUTO-1-2 switch.

In situations where the radiator inlet temperature is low and the panels have a favorable environment for heat rejection, the radiator outlet temperature starts to decrease and thus the bypass (flow through the PRIMARY GLYCOL EVAP INLET TEMP valve) ratio starts to increase. As more flow is bypassed, the radiator outlet temperature decreases until the -20°F minimum desired temperature would be exceeded. To prevent this from occurring, an in-line heater upstream of the radiator is automatically turned on when radiator mixed outlet temperature drops to -15±1°F and remains on until -10°±0.5°F is reached. The controller provides only on/off heater control which results in a nominal 450 watts being added to the coolant each time the heater is energized. Power for the controller comes from the ECS RADIATORS HEATER switch in the PRIM 1 or PRIM 2 position. Switching to the redundant heater system is accomplished by the crew, if the temperature decreases to -20°F.

If the radiator outlet temperature falls below the desired minimum, the effective radiator surface temperature will be controlled passively by the selective stagnation method. The two primary circuits are identical, each consisting of five tubes in parallel and one downstream series tube. The two panels, as explained in the flow proportioning control system, are in parallel with respect to each other. The five parallel tubes of each panel have manifolds sized precisely to provide specific flow-rate ratios in the tubes, numbered 1 through 5. Tube 5 has a lower rate than tube 4, and so on, through tube 1 which has the higher flow. It follows, that for equal fin areas the tube with the lower flow rate will have a lower coolant temperature. Therefore, during minimum CM heat loads, stagnation begins to occur in tube 5 as its temperature decreases; for as its temperature decreases, the fluid resistance increases, and the flow rate decreases. As the fin area around tube 5 gets colder, it draws heat from tube 4 and the same process occurs with tube 4. In a fully stagnated condition, there is essentially no flow in tubes 3, 4, and 5, and some flow in tubes 1 and 2, with most of it in tube 1.

When the CM heat load increases and the radiator inlet starts to increase, the temperature in tube 1 increases and more heat is transferred through the fin towards tube 2. At the same time, the PRIMARY GLYCOL EVAP INLET TEMP valve starts to close and force more coolant to the radiators, thus helping to thaw the stagnant portion of the panels. As tube 2 starts to get warmer and receives more flow, it in turn starts to thaw tube 3, etc. This combination of higher inlet temperatures and higher flow rates quickly thaws out the panel. The panels automatically provide a high effectiveness (completely thawed panels operating at a high-average fin temperature) at high-heat loads, and a low effectiveness (stagnated panels operating at a low-average fin temperature) at low-heat loads.

The secondary radiator consists of four tubes which are an integral part of the ECS radiator panel structure. Each tube is purposely placed close to the hottest primary radiator tubes (i.e., the number 1 and the downstream series tube on each panel) to keep the water-glycol in the secondary tubes from freezing while the secondary circuit is inoperative. The "selective stagnation" principle is not utilized in the secondary radiator because of the "narrower" heat load range requirements. This is also the reason the secondary radiator is a series loop. Because of the lack of this passive control mechanism, the secondary ECS circuit is dependent on the heater control system at low-heat loads and the evaporator at high-heat loads for control of the water-glycol temperature.

The secondary heater control receives power through the ECS RADIATORS HEATER switch in the SEC position. The secondary heaters differ from the primary in that they can be operated simultaneously. When the secondary outlet temperature reaches 45°F the No. 1 heater comes on, and at 42°F the No. 2 heater comes on; at 44°F No. 2 goes off, and at 45°F No. 1 goes off.

2.7.7 ELECTRICAL POWER DISTRIBUTION.

The electrical power required for the operation of the environmental control system is 28 volts dc and 115/200 volts 400 cycles 3-phase ac. (See figures 2.7-4 and 2.7-5.) The larger motors of the system utilize 200-volt 3-phase power, whereas the smaller motors and control circuits operate from a single phase of the ac at 115 volts. Except for the post-landing ventilation system, those components using 28 volts dc will receive power from the fuel cells before CSM separation and from batteries after separation. The postlanding ventilation system will operate from batteries, exclusively.

2.7.8 ECS PERFORMANCE AND DESIGN DATA.

The following table provides performance and design data for system components that operate automatically without direct control. Components that operate in response to crew control are described in AOH, Volume 1, section 3. Components are identified by the AiResearch item number and nomenclature.

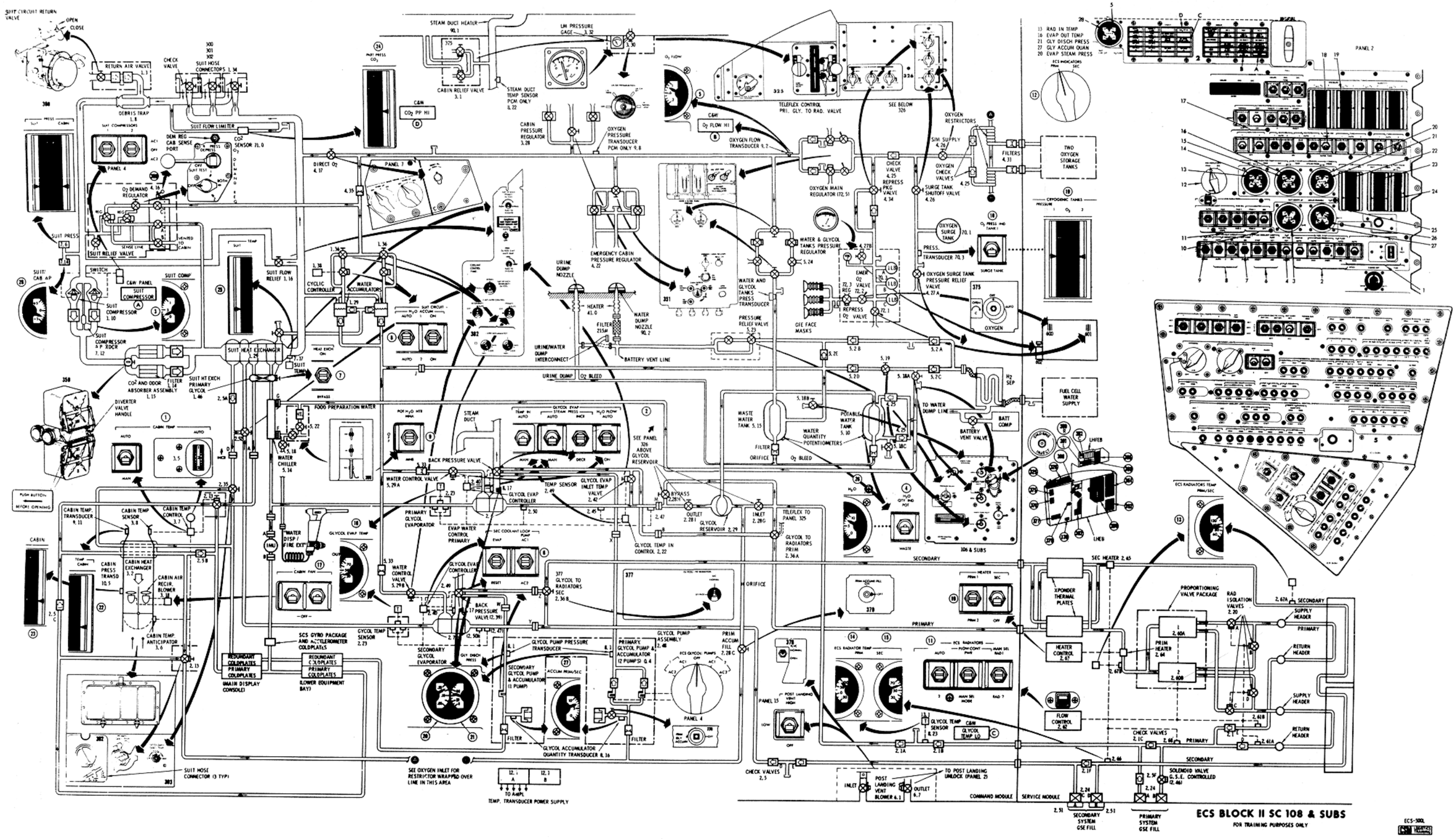

Figure 2.7-4. Environmental Control System Schematic

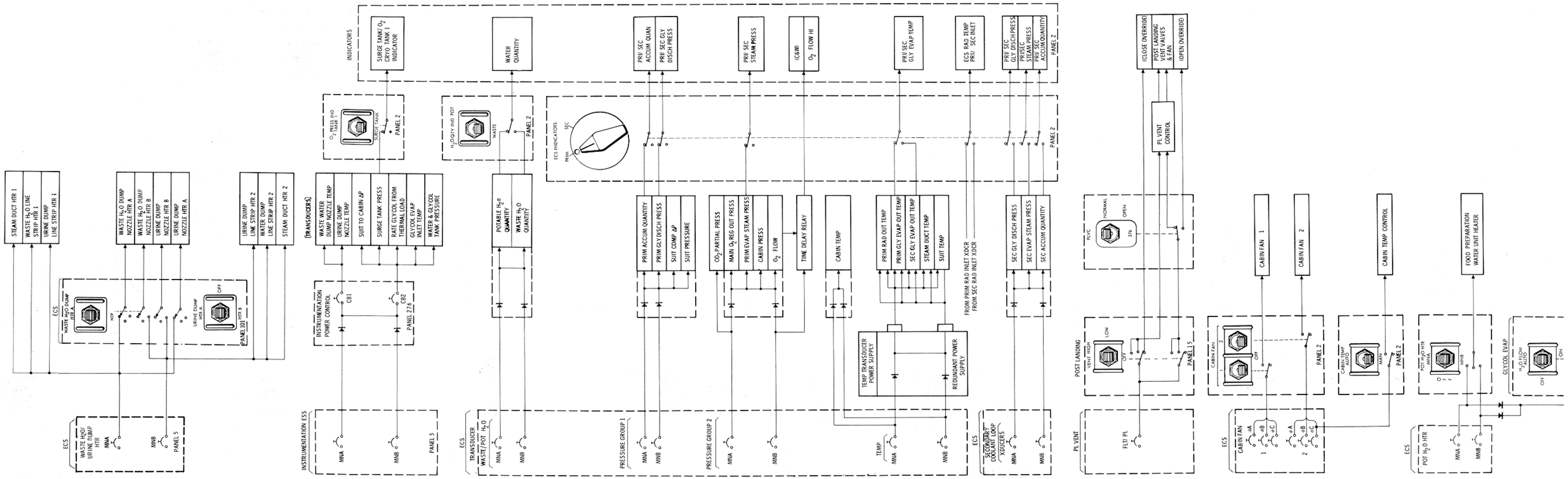

Figure 2.7-5. Environmental Control System Power Distribution (Sheet 1 of 2)

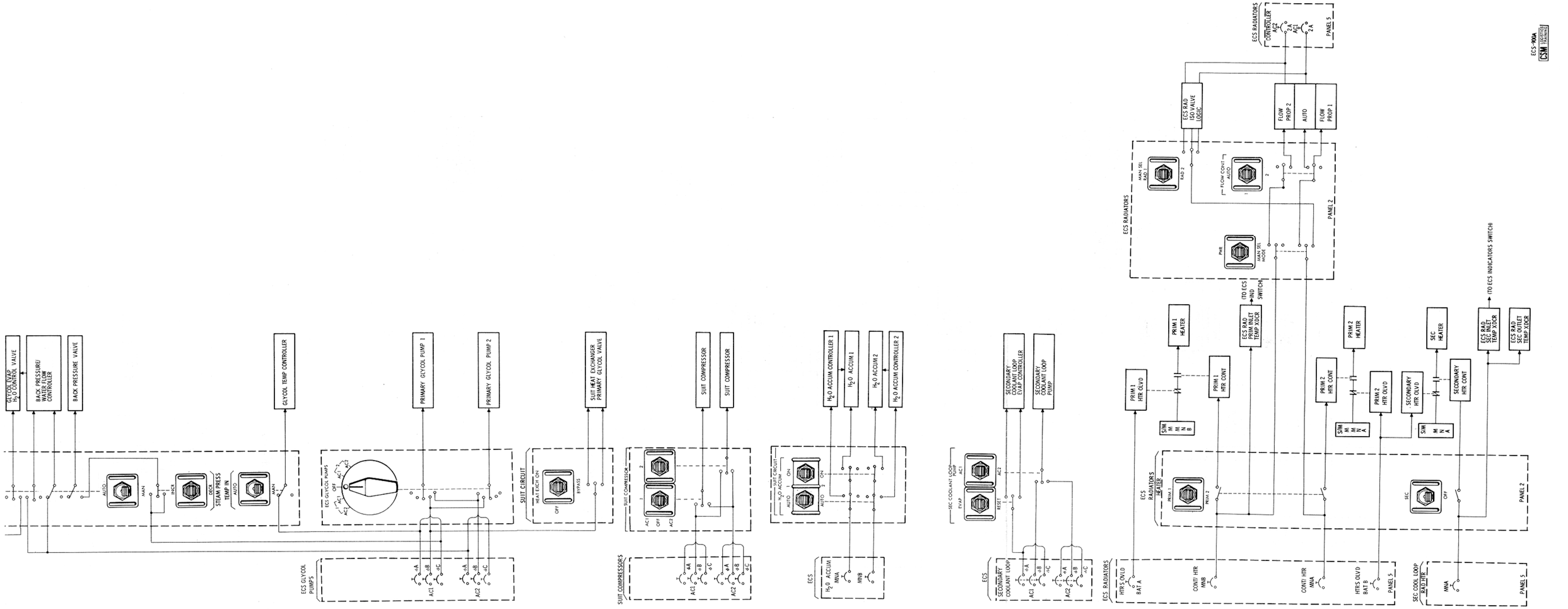

Figure 2.7-5. Environmental Control System Power Distribution (Sheet 2 of 2)

Item Number	Nomenclature	Location	Type	Function	Performance Characteristics
1.8	Debris trap	ECU	Mechanical filter with integral bypass	Prevents debris from entering the suit compressors.	Filtration = 0.04 in. Pressure drop = 0.25 in. H_2O max. Bypass valve cracks at 0.5 in. H_2O max.
1.10	Suit compressor	ECU	Centrifugal blower (2)	Circulates gases through the suit circuit.	Normal Operation = 35 cfm with 0.38 psi pressure rise at 5 psia; 33.6 cfm with 0.27 psi pressure rise at 3.5 psia.
1.29	Suit heat exchanger	ECU	2 pass, suit gas to water-glycol heat exchanger, and water separator	Cools suit gas and removes excess water to control humidity.	Cooling = 2100 Btu/hr total minimum.
1.31	Suit flow limiter	LHFEB	Venturi tube (3)	Limit the flow of gas to any one suit in case a suit becomes torn in a depressurized cabin.	Choked flow = 0.7 lb/minute O_2 max. at 3.5 psia and 70°F.
2.6 (2.7)	Primary (secondary) glycol evaporators	ECU	Evaporative heat exchanger (2)	Cools water-glycol by evaporation of waste water into low-pressure steam with minimum water carry-over into steam duct.	Heat transfer = 7620 Btu/hr. Steam water content = 1 percent max.

Item Number	Nomenclature	Location	Type	Function	Performance Characteristics
2.20	Space radiator isolation valves	S/M	Electrically actuated, rotary shut-off valve (4)	Controlled by flow-proportioning controller, or by flow control switches to isolate space radiators.	Actuation time = 17 sec max. for full rotational stroke. Power req. = 8 va max. at 115 v, 1Ø, 400 cps.
2.29	Glycol reservoir	LHEB	Tank with oxygen-pressurized bladder for W/G expulsion at zero G	Contains reserve supply of W/G; substitutes for failed accumulator.	Capacity = 8.2 lb W/G at 70°F.
2.39	Back pressure valve	ECU	Electrically actuated pinch valve	Controls "steam" pressure in W/G evaporator.	Actuation time = 58 sec max. full closed to full open. Power req. = 8 va (0.07a) at 115 v.
2.48	Glycol pumping unit	LHEB	Centrifugal impeller motor driven through magnetic coupling (two primary, one secondary)	Circulates W/G through the primary and/or secondary coolant loops.	Inlet press = 7.5 psig. Pump ΔP = 34 psid with 200-240 lb/hr flow rate. Power requirements = 115v, 3Ø, 400 cps, 52 W max.

Item Number	Nomenclature	Location	Type	Function	Performance Characteristics
3.2	Cabin heat exchanger	LHFEB	Plate fin, sandwich construction, cabin gas-to-water glycol heat exchanger	Used to control cabin gas temperature.	Heat transfer rate: Primary heating = 236 Btu/hr. Primary cooling = 892 Btu/hr. Secondary cooling = 1132 Btu/hr.
3.28	Cabin pressure regulator	LHEB 351	Two flow-limited, absolute pressure regulators with integral repressurization valve	Maintain cabin at normal pressure (nonemergency) and shut-off during depressurized cabin (emergency).	Hi pressure lock-up = 5.2 psia nominal. Control range = 5.2 to 4.8. Total range = 5.2 to 3.5 psia. Demand flow = 0.7 lb/hr each.
4.25	Hi press O_2 check	LHEB	Spring-loaded umbrella	Allows O_2 flow in one direction only.	Flow = 0.75 lb/min at 5 psid.
4.35	O_2 filter	LHEB	Mechanical	Provides filtering for O_2 supply to water accumulators and demand regulator.	10 microns nominal. 25 microns absolute.
5.10	Potable water tank	Aft Compartment	Cylindrical tank with pressurized bladder	Stores drinking water.	Capacity = 36 + 3, -0 lb H_2O at 150°F.
5.14	Water chiller	ECU	Heat exchanger	Utilizes 45° W/G to cool drinking water.	W/G flow = 167 lb/hr. W/G temp 45°F Water in = 150°F. Water out = 55°F max. With above inlet conditions and 6 fl oz H_2O withdrawn in 10 sec. max. at 24 min intervals.

Item Number	Nomenclature	Location	Type	Function	Performance Characteristics
5.15	Waste water tank		Cylindrical tank with pressurized bladder	Stores water for evaporative cooling.	Capacity = 56 + 3, -0 lb H_2O at 150°F.
5.29	Evaporator water control valves (primary and secondary)	LHEB 382	Normally closed solenoid valve in series with two-way selector valve	Controls water flow to primary and secondary W/G evaporators.	Flow capacity 24 lb/hr H_2O at 0.5 psid Power requirement = 6 va at 28 vdc.
5.33	Water filter (primary and secondary)	LHEB ECU	Filter cartridge plus bypass valve that opens for clogged cartridge	Filters waste water at inlet to primary and secondary W/G evaporators.	Filtration - = 10 microns absolute Bypass relief = 3 psid

SECTION 2

SUBSECTION 2.8

TELECOMMUNICATION SYSTEM (CSM 106 & SUBS)

2.8.1 INTRODUCTION.

The communications subsystem is the only link between the spacecraft and the manned space flight network (MSFN). In this capacity, the communications subsystem provides the MSFN flight controllers with data through the pulse code modulated (PCM) telemetry system for monitoring spacecraft parameters, subsystem status, crew biomedical data, event occurrence, and scientific data. As a voice link, the communications subsystem gives the crew the added capability of comparing and evaluating data with MSFN computations. The communications subsystem, through its MSFN link, serves as a primary means for the determination of spacecraft position in space and rate of change in position. CM-LM rendezvous is facilitated by a ranging transponder and active ranging system. Through the use of the television camera, crew observations and public information can be transmitted in real time to MSFN. A means by which CM and LM telemetry and voice can be stored in the spacecraft for later playback, to avoid loss because of an interrupted communications link, is provided by the communications subsystem in the form of the data storage equipment (DSE). Direction finding aids are provided for postlanding location and rescue by ground personnel.

The following list summarizes the general telecomm functions:

Provide voice communication between

- Astronauts via the intercom
- CSM and MSFN via the unified S-band equipment (USBE) and in orbital and recovery phases via the VHF/AM
- CSM and extravehicular astronaut (EVA) via VHF/AM
- CSM and LM via VHF/AM
- CSM and launch control center (LCC) via PAD COMM
- CSM and recovery force swimmers via swimmers umbilical
- Astronauts and the voice log via intercomm to the data storage equipment

Provide data to the MSFN of

- CSM system status
- Astronaut biomedical status
- Astronaut activity via television
- EVA personal life support system (PLSS) and biomed status
- LM system status recorded on CSM data storage equipment

Provide update reception and processing of

- Digital information for the command module computer (CMC)
- Digital time-referencing data for the control timing equipment (CTE)
- Real time commands to remotely perform switching functions in three CM systems

Facilitate ranging between

- MSFN and CSM via the USBE transponder
- LM and CSM via the rendezvous radar transponder (RRT)
- CSM and LM via the VHF/AM ranging system

Provide recovery aid

- VHF beacon for location

Provide a time reference for all time-dependent spacecraft subsystems except the guidance and navigation subsystem.

2.8.2 FUNCTIONAL DESCRIPTION.

The functional description of the T/C system is divided into four parts: intercommunications equipment, data equipment, radio frequency equipment, and antenna equipment. All of these functional groups of equipment interface with each other to perform the system tasks. In the functional descriptions of these parts, such interfaces will be apparent. The equipment that falls into each group is shown in figure 2.8-1.

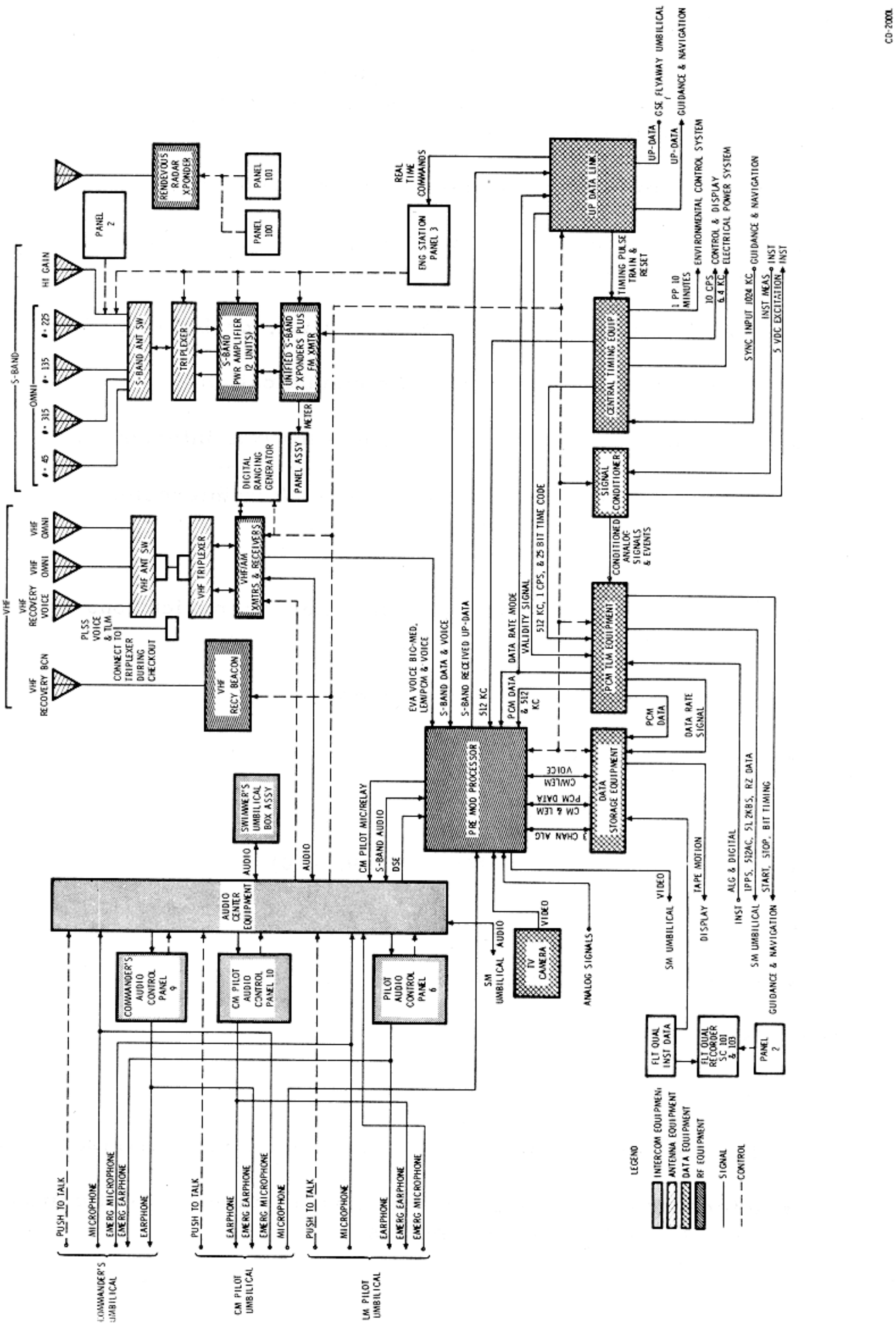

Figure 2.8-1. Telecommunications System

T/C

2.8.2.1 Intercommunications Equipment.

2.8.2.1.1 General.

The functions performed by the intercommunications equipment can be summarized as providing the means for each astronaut to interface or isolate himself to or from the

- Intercomm for astronaut-to-astronaut communications
- Pad communications for astronaut-to-launch control center communications
- VHF/AM for astronaut-to-MSFN, EVA, or LM communications
- USBE for astronaut-to-MSFN communications
- Data storage equipment for a voice log (via intercomm)
- Swimmers umbilical during recovery (via intercomm).

2.8.2.1.2 Equipment.

The equipment that falls into the intercommunications grouping is listed as follows:

- Personal communications assembly
- T-adapter cable
- Communications cable
- Audio control panels (MDC-6, -9, -10)
- Audio center
- Swimmers umbilical cable.

2.8.2.2 Data Equipment.

2.8.2.2.1 General.

The functions of the data equipment can be summarized as providing

- Information gathering and encoding (telemetering) of critical spacecraft and astronaut parameters

- Conditioning of instrumentation inputs for compatibility with the telemetry equipment
- Storage and playback capabilities of CSM and LM telemetering data, voice log, and scientific parameters
- Decoding and distributing of up-data to the proper switching or information receiving systems
- Frequency and/or time code signals to other spacecraft equipment

2.8.2.2.2 Equipment.

The equipment that falls under the data grouping is as follows:

- Central timing equipment (CTE)
- Signal conditioning equipment (SCE)
- Pulse code modulation (PCM) telemetering equipment
- Television (TV) camera
- Data Storage Equipment
- Up-data link (UDL) equipment.

2.8.2.3 Radio Frequency Equipment.

T/C

2.8.2.3.1 General.

The functions performed by the RF equipment can be summarized as the transmission and reception of

- Voice information between

  CM and MSFN
  CM and LM
  CM and EVA
  CM and recovery forces

- Telemetering data

  Between CM and MSFN
  From LM to CM to MSFN
  From EVA to CM to MSFN

- Television from CM to MSFN

- Ranging and beacon (BCN) information

  Pseudo-random noise ranging signals from MSFN to CM to MSFN

  Double doppler ranging signals from MSFN to CM to MSFN

  X-band radar signals from LM to CM to LM

  VHF ranging signals from CM to LM to CM

  VHF beacon signals from CM to recovery forces.

2.8.2.3.2 Equipment.

As shown in figure 2.8-1, the equipment that falls into the radio frequency grouping is

- VHF/AM transceivers A & B
- Digital ranging generator
- Unified S-band equipment (primary and secondary xponders and FM xmitter)
- S-band power amplifiers (primary and secondary)
- VHF beacon
- X-band xponder (rendezvous radar)
- Premodulation processor.

2.8.2.4 Antenna Equipment.

The antenna equipment can be divided into three groups: VHF antennas and ancillary equipment, S-band antennas and ancillary equipment, and beacon antenna. Their overall function is to propagate and receive RF signals from and to the RF equipment. The ancillary equipment includes two RF switches, 2 triplexers, and the servo-drive system for the high-gain antenna (figure 2.8-2).

2.8.3 MAJOR COMPONENT/SUBSYSTEM DESCRIPTION.

To facilitate this presentation, the functional divisions established in the previous section will be retained. In many instances, however, when an operational mode is being explained, interfacing equipment of another division will be discussed to present a complete picture.

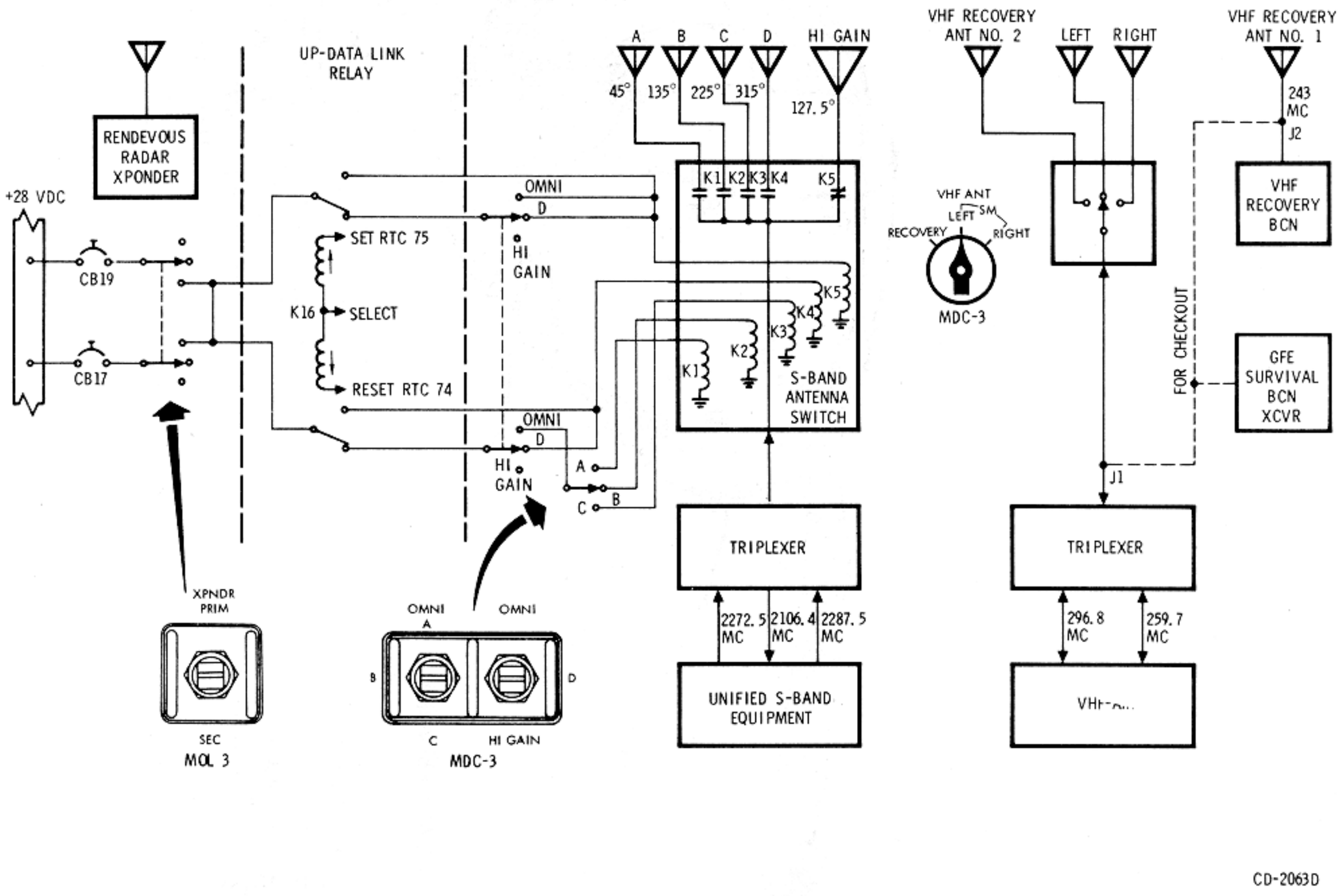

Figure 2.8-2. Antenna Equipment Switching

2.8.3.1 Intercommunication Equipment.

2.8.3.1.1 Personal Communications Assembly (Comm Carrier).

As shown in figure 2.8-3 the personal communications assembly (comm carrier) contains redundant earphones and microphones. The comm carrier can be worn with the space suit, flight coveralls, or constant wear garment. When used with the space suit, the comm carrier is interfaced with an integral wiring harness in the suit. A T-adapter cable is required when the comm carrier is worn with the flight coveralls or just the constant wear garment to interface to headset with the comm cable.

Figure 2.8-3. Personal Communications Assembly

Three lightweight headsets are also available for use in the CM. They have a single earphone and microphone with a lightweight head clamp and connecting cable.

2.8.3.1.2 T-Adapter Cable (Figure 2.8-4).

The T-adapter cable is used when the astronaut is wearing his flight coveralls or just his constant wear garment to connect the personal communications assembly and biomed preamplifiers to the comm cable. An integral cable assembly performs this function when the astronaut is in his space suit so no T-adapter is necessary. Besides handling the audio signals to and from the comm carrier, the T-adapter must handle 16.8 volts needed by the microphone preamps and biomed preamps. The output of the biomed preamps is also routed to the comm cable.

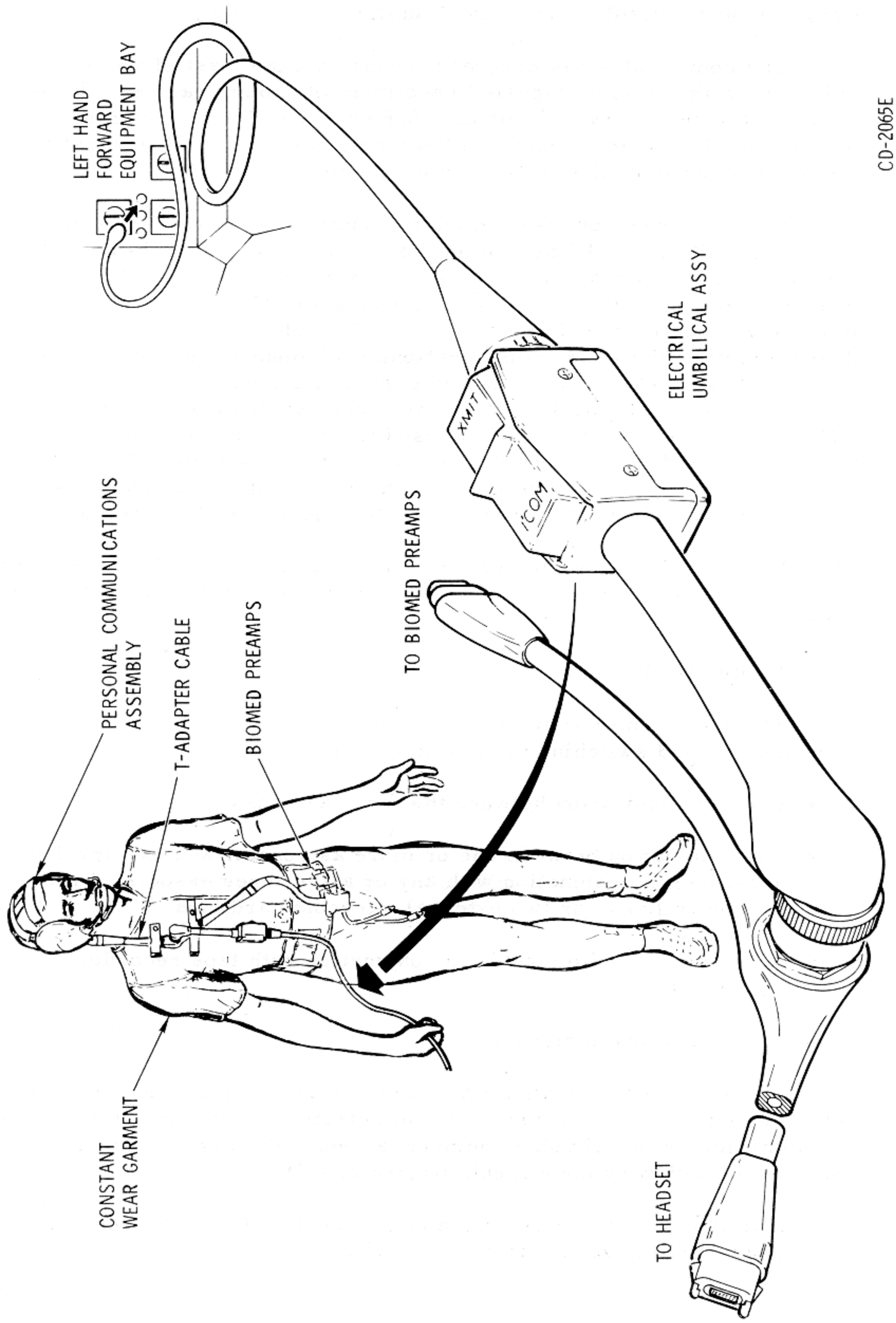

Figure 2.8-4. Communications Cable

T/C

2.8.3.1.3 Communications Cable (Electrical Umbilical Assembly).

The comm cable has several functions not the least of which is providing the path for audio signals to and from the comm carrier. It also provides the necessary path for the 16.8 volts required by the microphone preamps in the comm carrier and the biomed preamps. The output from the biomed preamps also is carried by the comm cable.

Separate from, but related to, the audio signals from the comm carrier are the control functions of the comm cable control head. This control head contains a self-centering rocker switch which, when depressed on one side or the other, initiates specific functions in the intercommunications equipment. The I'COM side of the rocker switch is depressed when the intercommunications equipment is configured in the manual (PTT) mode of operation and communications over just the intercom is desired. The XMIT side of the rocker switch can be used for two different functions. Normally it is used to enable communications over the intercom and RF equipment in any of the three operational modes of the intercommunications equipment. The XMIT side of the rocker switch can also be used as a sending key in the S-band key mode of operation.

Figure 2.8-4 shows the comm cables interface with the connectors on the left-hand forward equipment bay (below panel 301) and the T-adapter cable.

2.8.3.1.4 Audio Center Equipment.

The audio center equipment accomplishes the necessary audio signal amplification and switching to provide the capability of the following:

- Intercommunication between the three astronauts
- Communication between one or more astronauts and extravehicular personnel in conjunction with any or all of three associated radio frequency links, or two external intercom hardlines
- Recording of audio signals in conjunction with tape recording equipment
- Relaying of audio signals.

The audio center equipment consists of three electrically identical sets of circuitry which provide parallel selection, isolation, gain control, and amplification of all voice communications. Each set of circuitry contains the following components (figure 2.8-5):

- Isolation pad, diode switch, and gain control for each receiver input, and intercom channel.

- Isolation pad and diode switch for each transmitter modulation output and intercom channel.
- An earphone amplifier and a microphone amplifier.
- Voice-operated relay (VOX) circuitry with externally controlled sensitivity.

The equipment operates with three remote control panels to form three audio stations, each providing an astronaut with independent control of all common functions. Each station has the capability of accommodating a second astronaut for emergency operation. Provision is made in each station to enable voice transmission over any or all transmitters by means of a voice-operated relay (VOX) circuit or push-to-talk (PTT) circuit. A "hot mike" is so incorporated as to maintain continuous intercrew communication using the INTERCOM/PTT mode, and to require PTT operation for eternal transmission. Enabling a TRANSMIT function also enables the corresponding RECEIVE function. Sidetone is provided in all transmit modes.

Audio signals are provided to and from the VHF/AM transmitter-receiver equipment. USBE (via the PMP), the PAD COMM, and intercom bus. The PAD COMM, intercom bus, and all transmitter-receiver equipments are common to all three stations.

Inputs and outputs are controlled by the VHF/AM, S-BAND, PAD COMM, and INTERCOM switches on the audio control panels. Each of these switches has three positions: T/R, OFF, and RCV. Setting any of the switches to T/R permits transmission and reception of voice signals over its respective equipment, RCV permits reception only, and OFF disables the input and the output. The POWER switch of each station, in either AUDIO/TONE or AUDIO, energizes the earphone amplifier to permit monitoring. The AUDIO/TONE position also enables the audible crew alarm to be heard, if triggered, at the respective SC station. Each SC station can be isolated from the alarm by selecting the AUDIO or OFF position. The operation of the microphone amplifier in each station is controlled by the VOX keying circuit or the PTT pushbutton on the comm cable or on the rotation controller. The VOX circuit is energized by the VOX position of the MODE switch on each audio control panel. When energized, the VOX circuit will enable both the intercom and accessed transmitter keying circuits. The INTERCOM/PTT position permits activation of the PAD COMM, VHF/AM, and S-band voice transmission circuits by the PTT key while the intercom is on continuously. The PTT position permits manual activation of the intercom or intercom and transmitter keying circuits by depression of the I'COM or XMIT side of the communication cable switch, respectively.

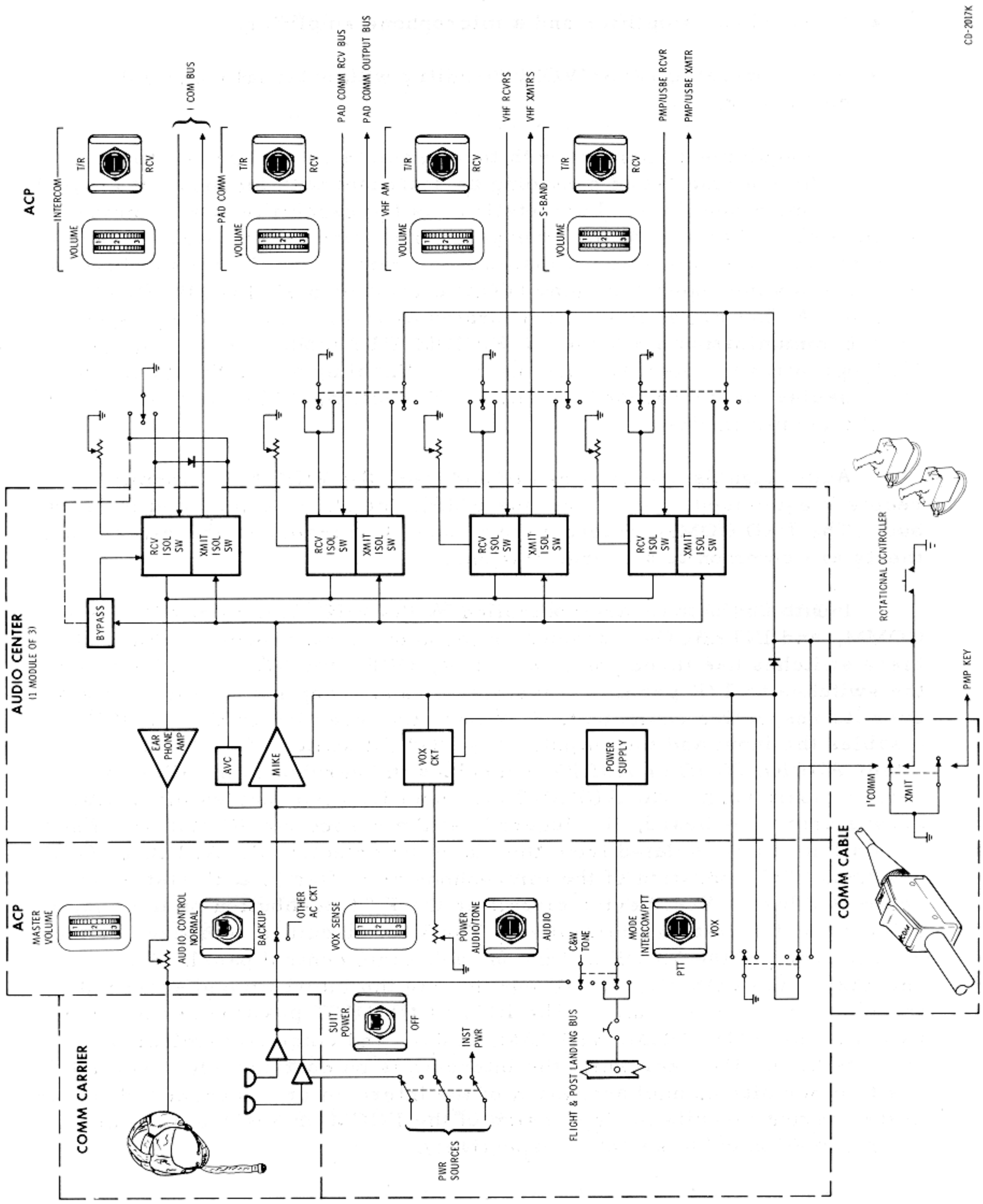

Figure 2.8-5. Audio Center

Six potentiometer controls are provided on each audio control panel: VOX SENS, PAD COMM, S-BAND, INTERCOM, VHF/AM and MASTER VOLUME. The VOX SENS control is used to adjust the sensitivity of the VOX circuitry, determining the amplitude of the voice signal necessary to trigger the VOX keying circuit. The PAD COMM, S-BAND, VHF/AM, and INTERCOM volume controls are used to control the signal levels from the respective units to the input of the earphone amplifier. The MASTER VOLUME controls the level of the amplified signal going to the earphones.

The intercom bus connects to the recovery interphone (swimmer umbilical), and the premodulation processor which in turn routes the signal to the data storage equipment for recording.

An AUDIO SELECT switch on each audio control panel allows the astronaut to access himself to the normal audio center circuits for that station, or through a selection of the BACKUP position, access himself to the audio control panel and audio center of another station. In the BACKUP position the commander is accessed to the LM pilot's panel and audio center, while BACKUP for the CM pilot accesses him to the commander's panel and audio center. The LM pilot is accessed to the CM pilot's panel and audio center if he selects the BACKUP mode.

A SUIT POWER switch on each panel controls application of power to the respective astronauts personal communications assembly microphone preamplifiers and the biomed preamplifiers contained in his constant wear garment.

It is important to note that most signal processing done by the audio center is of preparatory nature. In order for any audio signal to be transmitted or received, the RF equipment must be in the proper operational mode.

T/C

2.8.3.1.5 Swimmers Umbilical Cable.

The swimmers umbilical cable is deployed with the dye marker in the recovery phase of the mission. It provides a hard-line connection to the spacecraft intercom bus for the recovery force swimmers. Actual deployment is accomplished by activating the guarded DYE MARKER switch on MDC-8 which provides 28 vdc to a pyrotechnic actuator.

2.8.3.2 Intercommunication System Interfaces.

Figure 2.8-6 illustrates the interfaces between the intercommunications group and the other telecommunications equipment. One interface shown that is not readily apparent is the signal path used in the relay mode of operation. This mode of operation ties the VHF AM and S-band equipment together to provide a three-way conference capability between the

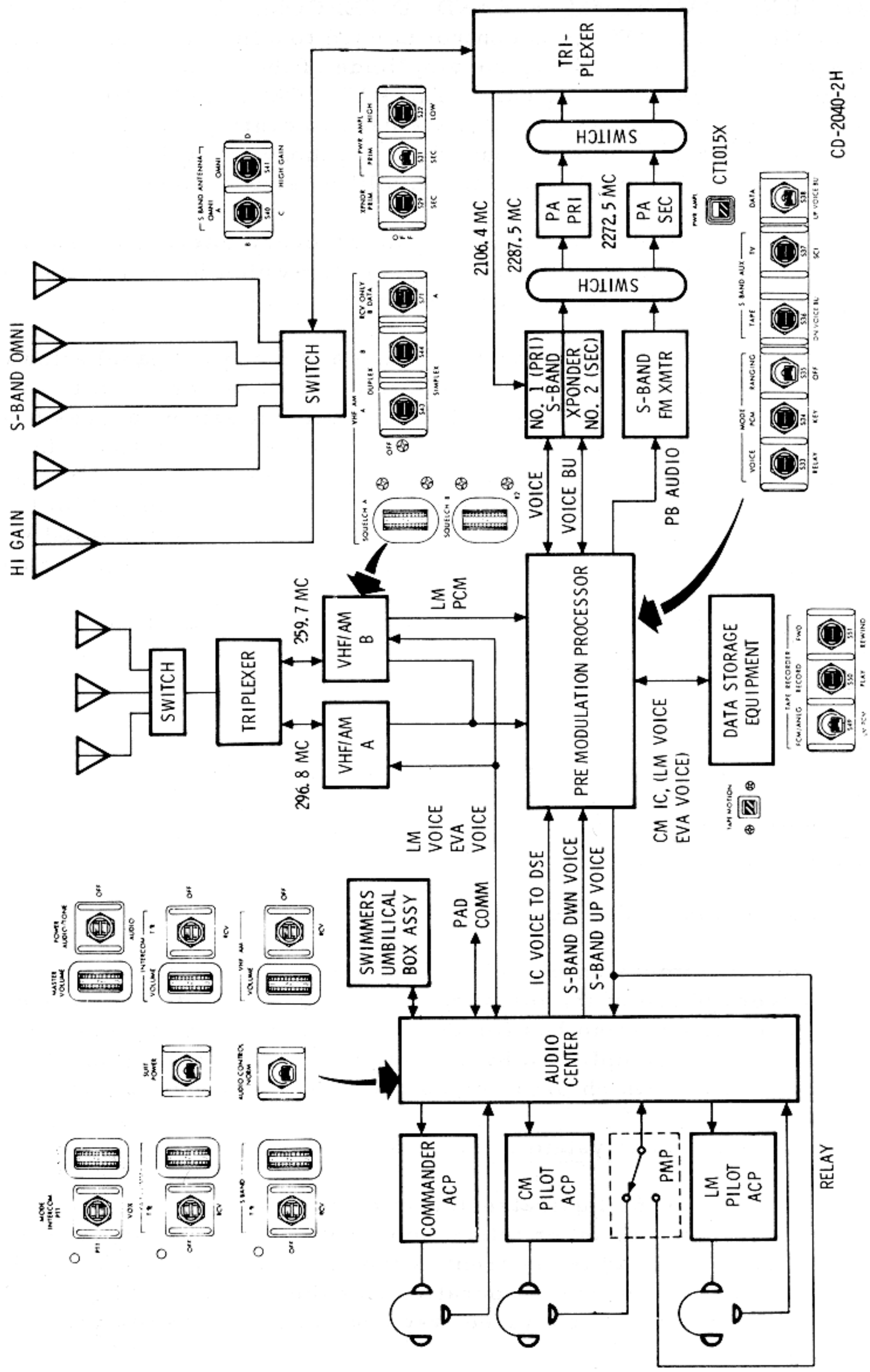

Figure 2.8-6. Audio Interfaces

MSFN, CM and LM, or EVA. The intercommunications equipment enters this process when the received MSFN voice signal (S-band or voice) is routed to the microphone input of the CM pilot. Then, through proper switching, this signal is routed to the VHF AM transmitter for relaying to the LM or EVA. In the relay mode, the CM pilot's microphone is not usable. The return relay is accomplished by adding the VHF/AM received voice to the normal S-Band down voice channel.

Another function not too obvious is voice log recording and playback. The intercomm bus of the audio center is connected through the premodulation processor to the data storage equipment (DSE). Any time the DSE is recording, the conversation on the intercomm bus will be recorded as well, in some instances, as the received voice from the VHF/AM equipment. There are no provisions to monitor this recorded voice in the SC.

2.8.3.3 Data Equipment.

2.8.3.3.1 Instrumentation Equipment Group.

The SC instrumentation equipment consists of various types of sensors and transducers for providing environmental, operational status, and performance measurements of the SC structure, operational systems, and experimental equipment. The outputs from these sensors and transducers are conditioned into signals suitable for utilization by the SC displays, presentation to the PCM TLM equipment, or both. In addition, various digital signals are presented to the PCM TLM equipment, including event information, guidance and navigation data, and a time signal from the CTE.

T/C

Many of the signals emanating from the instrumentation sensors are of forms or levels which are unsuitable for use by the SC displays or PCM TLM equipment. Signal conditioners are used to convert these signals to forms and levels which can be utilized. Some signals are conditioned at or near the sensor by individual conditioners located throughout the SC. Other signals are fed to the signal conditioning equipment (SCE), a single electronic package located in the lower equipment bay. (Refer to paragraph 2.8.3.3.5 for signal conditioning equipment.) In addition to conditioning many of the signals, the SCE also supplies 5-volt d-c excitation power to some sensors. The SCE can be turned on or off with the POWER-SCE switch on MDC-3. This is the only control that the crew can exercise over instrumentation equipment for operational and flight qualification measurements. These two instrumentation groups are discussed in paragraphs 2.8.3.3.2 and 2.8.3.3.3

2.8.3.3.2 Operational and Flight Qualification Instrumentation.

Operational measurements are those which are normally required for a routine mission and include three categories: in-flight management

of the SC, mission evaluation and system performance, and preflight checkout of the SC. The operational instrumentation sensors and transducers are capable of making the following types of measurements: pressure, temperature, flow, rate, quantity, angular position, current, voltage, frequency, RF power, and "on-off" type events.

Flight qualification measurements may vary between SC, depending on mission objectives and state of hardware development. These measurements will be pulse-code modulated along with the operational measurements and transmitted to the MSFN.

2.8.3.3.3 Data Equipment Interfaces.

Figure 2.8-7 illustrates the major interfaces between the units that make up the data equipment and their interfaces with the RF equipment group.

2.8.3.3.4 Central Timing Equipment (CTE).

The CTE provides precision square-wave timing pulses of several frequencies to time-correlate all SC time-sensitive functions. It also generates and stores the real-time day, hour, minute, and second mission elapse time (MET), in binary-coded decimal (BCD) format for transmission to the MSFN. (See figure 2.8-8.)

In the primary or normal mode of operation, the command module computer (CMC) provides a 1024-kc sync pulse to the CTE. This automatically synchronizes the CTE with the CMC and provides a stability of $\pm 2 \times 10^{-6}$ parts in 14 days. In the event of sync pulse failure, the CTE automatically switches to the secondary mode of operation with no time lapse and operates using its own crystal oscillator at a stability reduced to $\pm 2.2 \times 10^{-6}$ parts in 5 days.

The CTE requires approximately 20 watts of 28-vdc power for its two redundant power supplies. Each one is supplied from a different power source and through separate circuit breakers. These circuit breakers, CENTRAL TIMING SYS-MN A and - MN B on MDC-225, provide the only external means of control for the CTE. The two power supplies provide paralleled 6-volt d-c outputs, either one of which is sufficient to power the CTE.

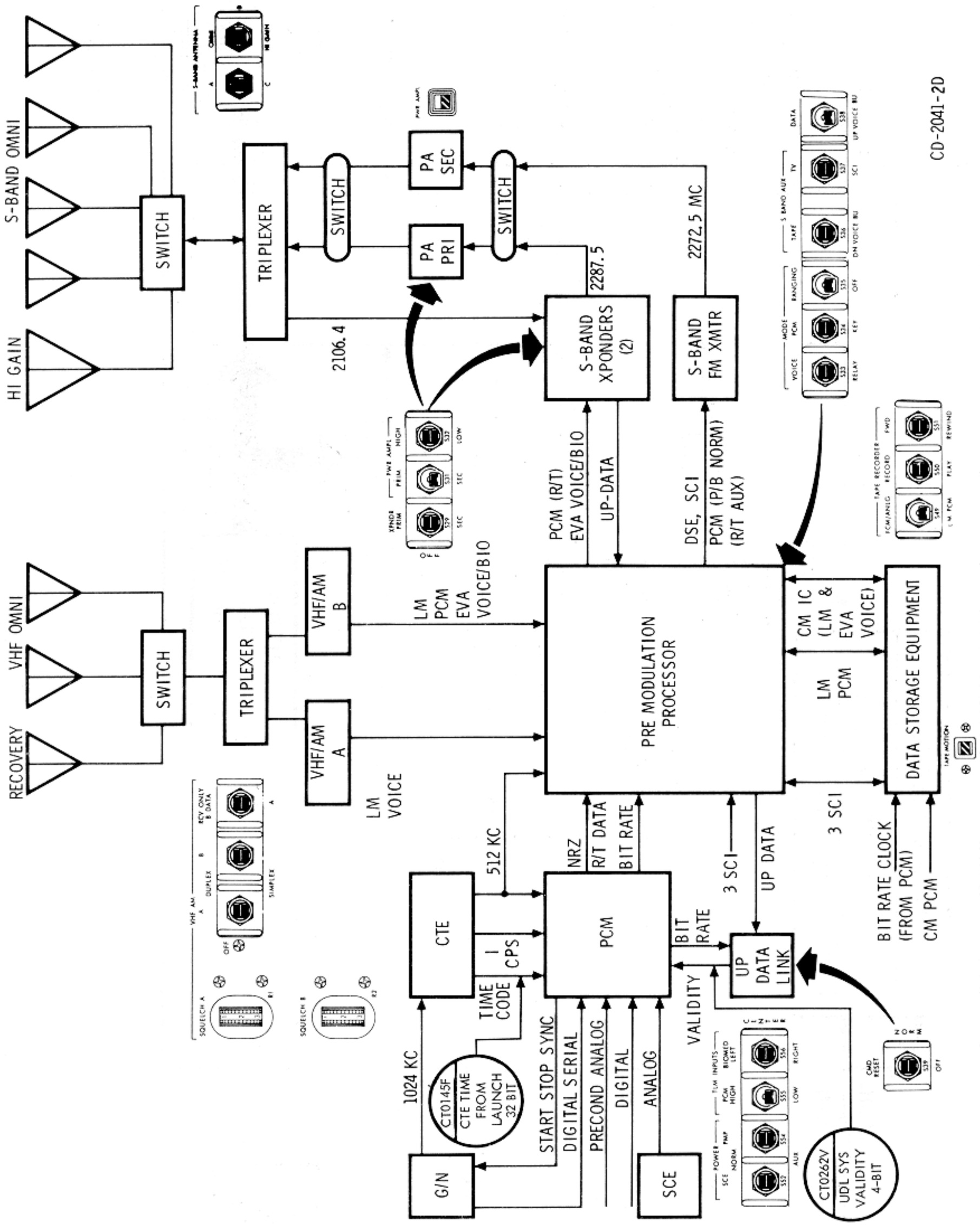

Figure 2.8-7. Data Interfaces

T/C

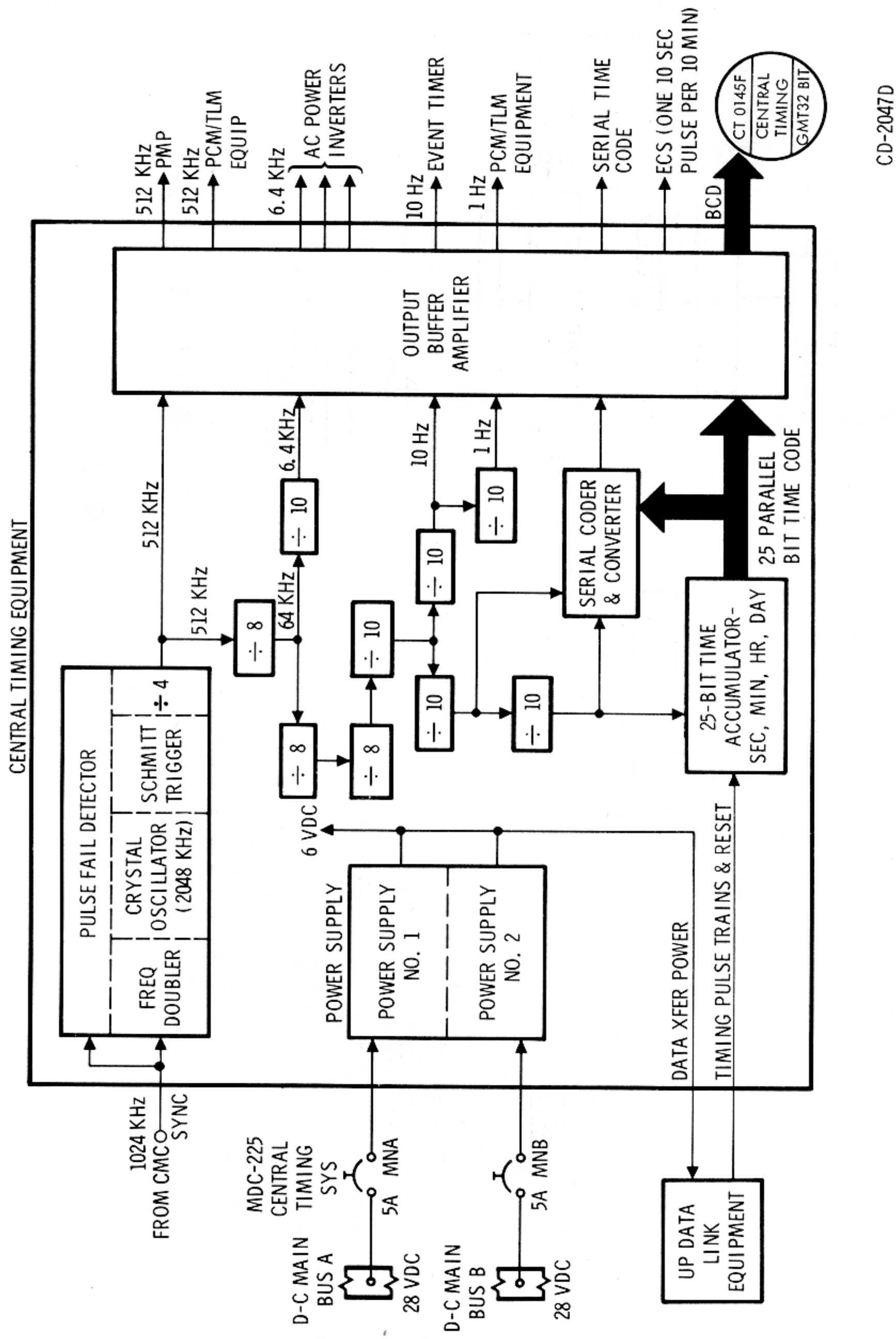

Figure 2.8-8. Central Timing Equipment

The timing signals generated by the CTE, and their applications, are listed in the CTE outputs charts.

CTE OUTPUTS

Signal	Destination	Purpose
512-kc sq wave	PCM	SYNC of internal clock
512-kc sq wave	PMP	Modulating signal for S-band emergency key transmission
6 4-kc sq wave	EPS inverters (3)	Sync of 400-cycle a-c power
10-cps sq wave	Digital event timer	Pulse digital clock
1-cps sq wave	PCM	PCM frame sync
1 pulse per 10 minutes	ECS	Discharge water from astronaut suit
25-bit parallel time code output	PCM	Time correlation of PCM data
Serial time code output (3)	Scientific data equipment	Time correlation of data

T/C

2.8.3.3.5 Signal Conditioning Equipment (SCE).

The signal conditioning equipment (SCE) is contained in a single electronics package located in the LEB. (See figure 2.8-9.) Its functions are to convert various kinds of unconditioned signals from the instrumentation equipment into compatible 0- to 5-volt d-c analog signals, and to provide excitation voltages to some of the instrumentation sensors and transducers.

The SCE contains the following modules:

- DC differential amplifier assembly
- DC differential bridge amplifier assemblies
- AC to DC converter assembly
- DC active attentuator assembly
- Power supply +20 vdc, -20 vdc, +10 vdc, +5 vdc
- Redundant power supply - +20 vdc, -20 vdc, +10 vdc, +5 vdc.

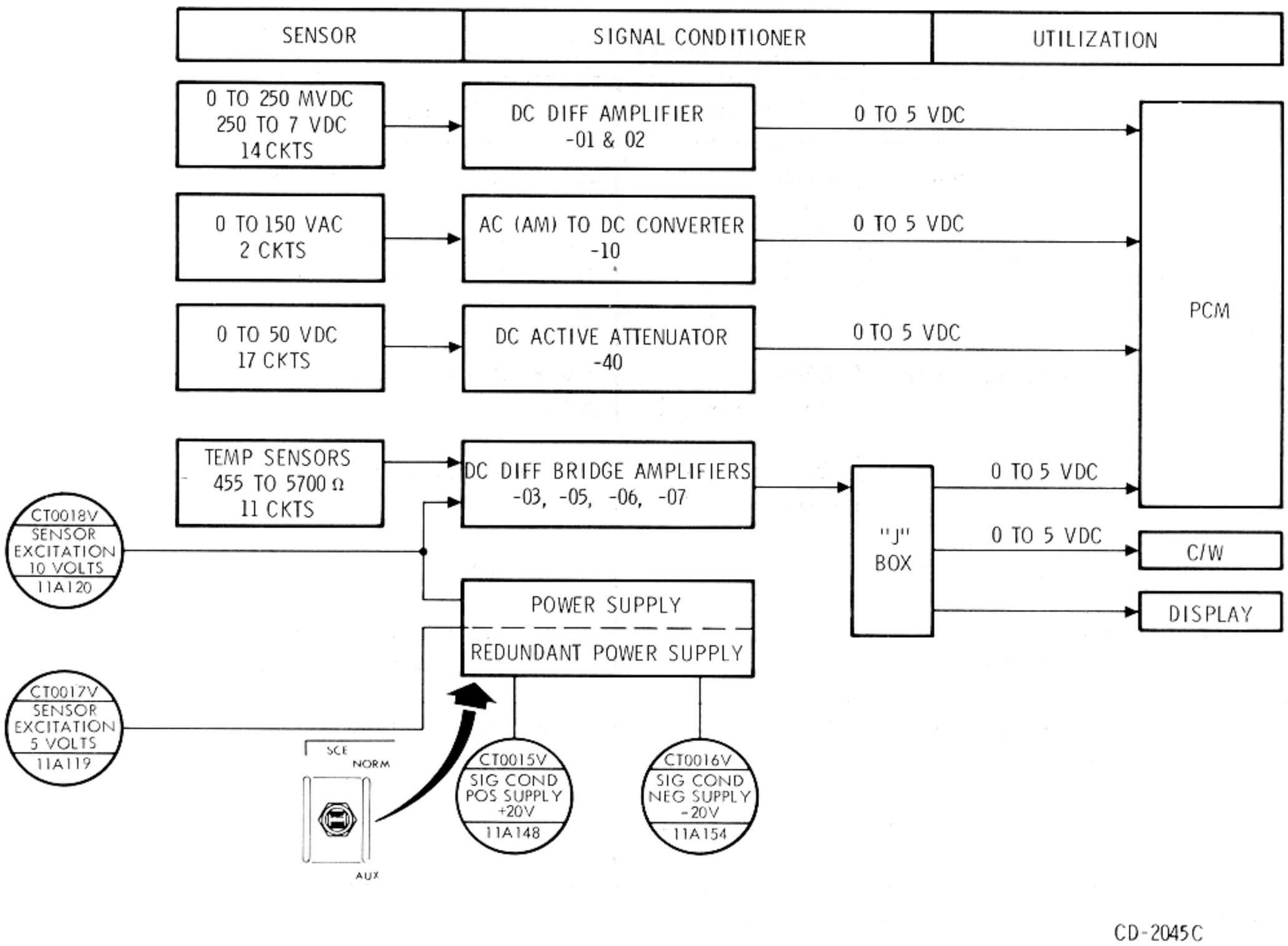

Figure 2.8-9. Signal Conditioning Equipment

The only external control for the SCE is the 3-position SCE switch on MDC-3. The NORMAL position energizes the primary power supply and an error detection circuit. If the primary power supply voltages go out of tolerance, the error detection circuit automatically switches the SCE to the redundant power supply. The SCE will not automatically switch back to the primary once it has switched to the redundant unless power is interrupted.

The AUX position provides for manual switching between the power supplies. This is accomplished by repeated selection of the AUX position.

The SCE requires 28-volt d-c power input and consumes about 35 watts.

Figure 2.8-9 shows graphically the input and outputs of the SCE and its redundant power supply.

2.8.3.3.6 Pulse-Code Modulation Telemetry (PCM TLM) Equipment.

The function of the PCM TLM equipment (figure 2.8-10) is to convert TLM data inputs from various sources into one serial digital output signal. This single-output signal is routed to the PMP for transmission to the MSFN or to the DSE for storage. The PCM TLM equipment is located in the lower equipment bay. Input signals to the PCM TLM equipment are of three general types: high-level analog, parallel digital, and serial digital.

Two modes of operation are possible: the high (normal) bit-rate mode of 51.2 kilobits per second (kbps) and the low (reduced) bit-rate mode of 1.6 (kbps). Operational mode is selected by placing the TLM INPUTS-PCM switch on MDC-3 to HIGH or LOW, as applicable. When the switch is in the LOW position, the high-PCM bit-rate can be commanded by the MSFN via the UDL equipment. The PCM requires about 21 watts of 3-phase 115/200-volt 400-cps a-c power. Internal signal flow of the PCM is shown in figure 2.8-10.

The analog multiplexer can handle 365 high-level analog inputs in the high-bit-rate mode. Four of these signals, 22A1-4, are sampled at 200 SPS; 16 signals, 12A1-16, are sampled at 100 SPS; 15 signals, 51A1-15, are sampled at 50 SPS; 180 signals, 11A1-180, are sampled at 10 SPS; and 150 signals, 10A1-150, are sampled at 1 SPS.

T/C

These analog signals are gated through the multiplexer, the high-speed gates, and are then fed to the coder. In the coder, the 0- to 5-volt analog signal is converted to an 8-bit binary digital representation of the sample value. This 8-bit word is parallel-transferred into the digital multiplexer where it is combined with 38 external 8-bit digital parallel inputs, and 5 internal ones, to form the majority of the output format.

The external digital parallel inputs fall into three groups. The first group contains two 8-bit word inputs sampled at 200 S/S at the high-bit rate only. The second group contains a single 8-bit word input sampled at 50 S/S at the high bit rate and 10 S/S at the low bit rate. The third, and largest, group contains 35 eight-bit word inputs sampled at 10 S/S at the high-bit rate and one S/S at the low-bit rate. The remaining inputs to the digital multiplexer are internal and come from the coder, sync format, and programmer of the PCM.

This digital parallel information is parallel-transferred into the output register where it is combined with the digital serial input, and then outputted serially into the data transfer buffer. From here the information is passed on to the premodulation processor for preparation for transmission over the RF equipment.

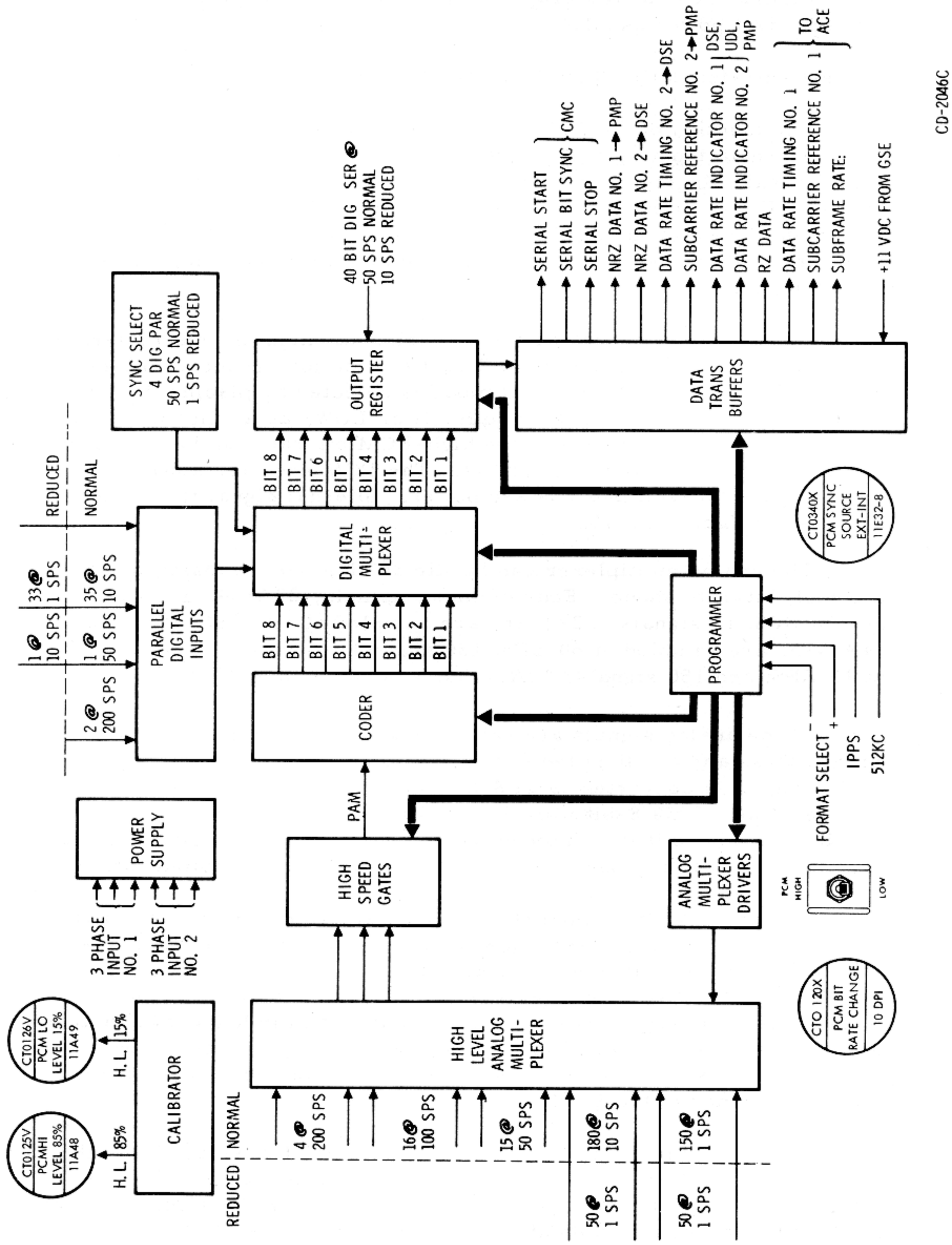

Figure 2.8-10. PCM Block Diagram

The PCM receives 512-kc and 1-cps timing signals from the central timing equipment. If this source fails, the PCM programmer uses an internal timing reference. The timing source being used is telemetered. Two calibration voltages are also telemetered as a confidence check of the PCMs overall operation.

The PCM requires about 21 watts of 3-phase 400-cycle power for its redundant power supplies.

2.8.3.3.7 Television (TV) Equipment.

The TV equipment consists of a small, portable TV camera that can be hand-held, or mounted in the locations shown in figure 2.8-11. Its function is to acquire real-time video information for transmission to the MSFN. The camera is connected to a 12-foot cable for use throughout the CM. The cable is connected to the power connector J395 and coax connector J122 on the aft side of the right-hand forward equipment bay. See figure 2.8-12 for physical dimensions.

The camera is controlled by an ON/OFF switch on the camera handle and an automatic light control switch on the back. Power is supplied to the cameras ON/OFF switch through CB13 located on RHEB-225 when the S-BAND AUX TAPE/VOICE B4 switch (MDC-3) is in the OFF position and the S-BAND AUX TV/SCI switch (MDC-3) is in the TV position. Power required by the camera is 6.75 watts at 28 volts dc.

The composite video signal is sent from the camera to the premodulation processor where it is then sent to the S-band FM transmitter and its associated power amplifier for transmission to the MSFN and to the SM umbilical for hardline communications before lift-off.

T/C

The color TV equipment consists of a small, portable color TV camera that can be hand-held, or mounted in the locations shown in figure 2.8-12A. One of the camera functions is to acquire real-time color video information for transmission to the MSFN. The camera's primary function is its use during rendezvous and docking operations. During this period of operation it will be mounted at the right-hand rendezvous window. A TV monitor is used with the color TV camera for astronaut viewing of TV operations. See figure 2.8-12B for details of camera and monitor. The color TV camera is compatible with the present black and white TV system in relation to power connections and switch controls.

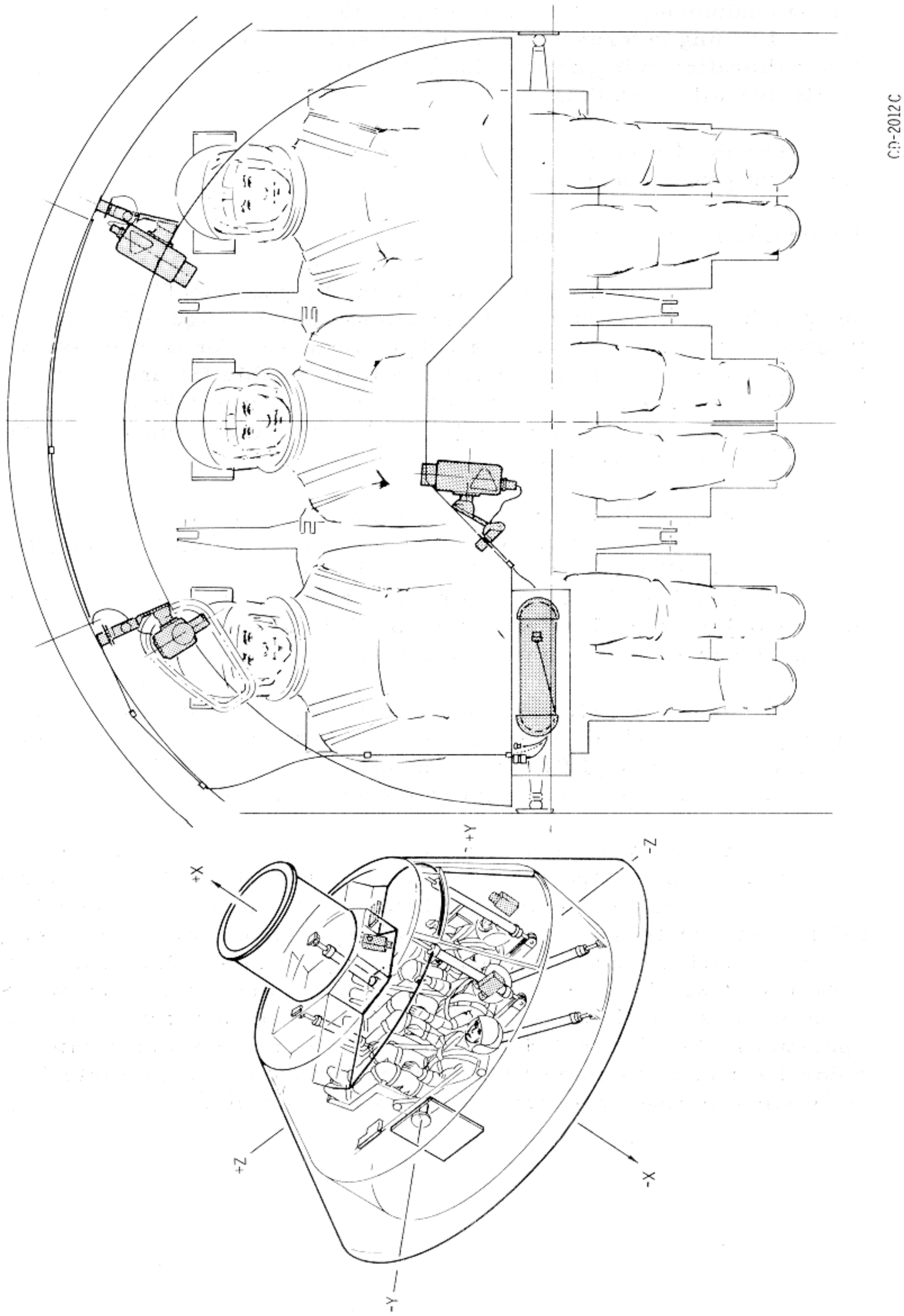

Figure 2.8-11. Television Camera Locations

2.8.3.3.8 Data Storage Equipment (Figure 2.8-13).

The data storage equipment provides for the storage of data for delayed playback and/or recovery with the spacecraft. Information is recorded during powered flight phases, and when out of communication, is then played back (dumped) when over selected S-band stations.

- Location: lower equipment bay.

Electrical Power Requirements.

- Voltage input: 115-vac 3-phase 400-cps and/or 28-vdc
- Power input: 40 watts nominal, 70 watts maximum (3 seconds).

Tape Transport Characteristics.

- Tape speeds: 3.75, 15, and 120 ips
- Operational stability: Stable in less than 5 seconds

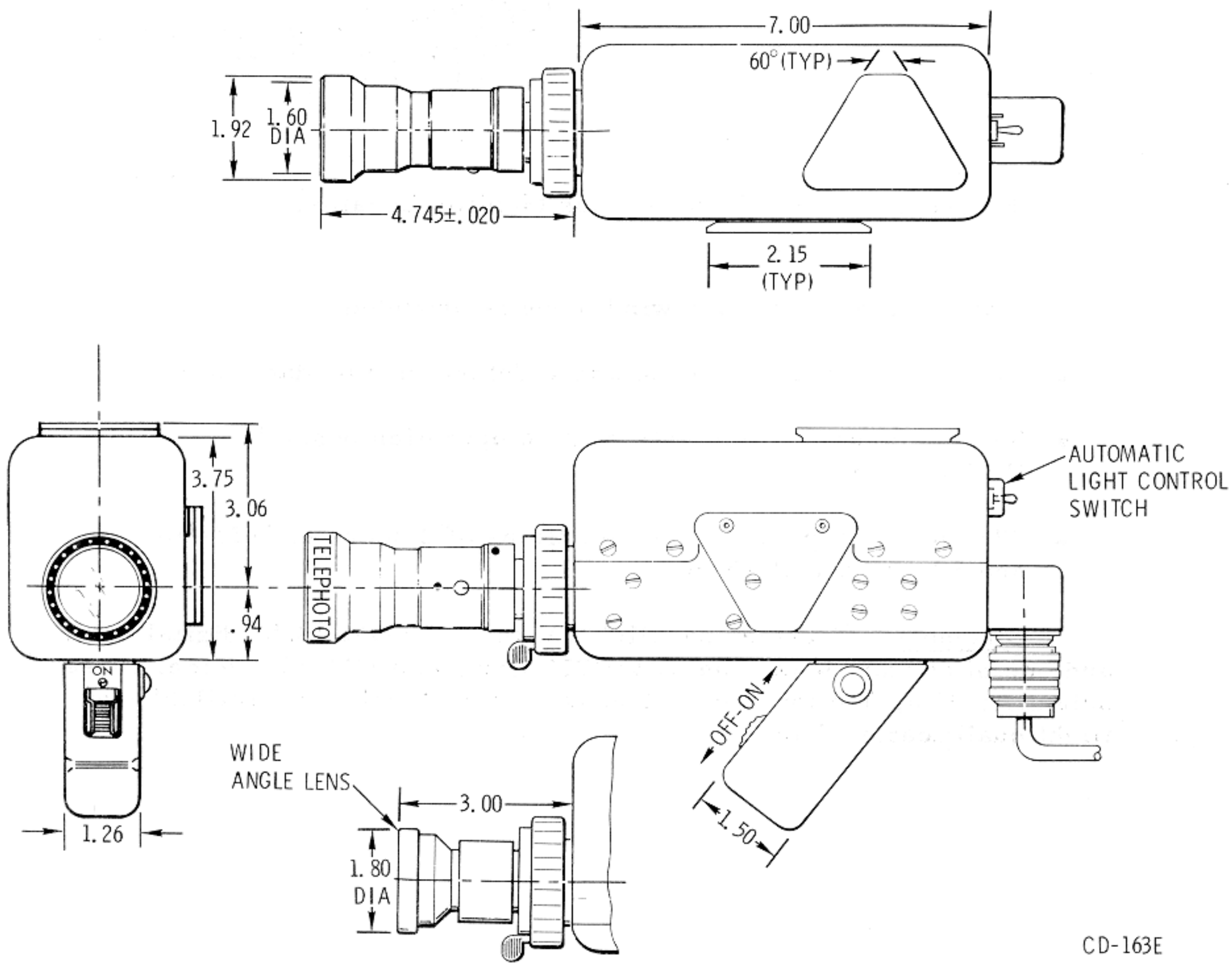

Figure 2.8-12. Television Camera

T/C

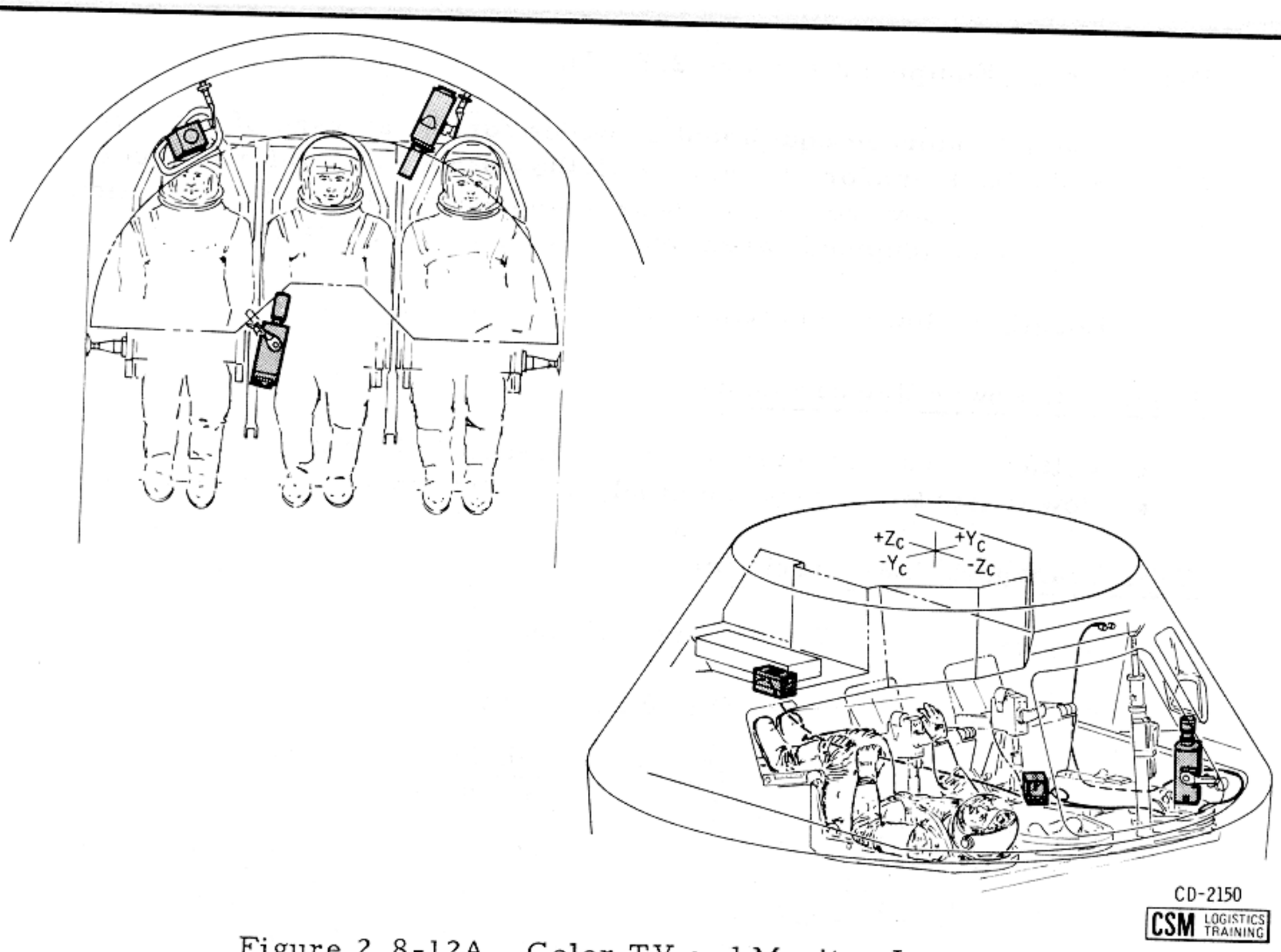

Figure 2.8-12A. Color TV and Monitor Locations

- Single directional: A rewind mode is provided.
- Automatic selection: Tape speed determined by data rate.
- Remote control: Complete remote operation possible via Up Data Link
- 2250 feet of tape giving record times of 2 hours at 3-3/4 ips and 30 minutes at 15 ips

Channels. Fourteen parallel tracks: four CM PCM digital data, and one of digital clock, one LM PCM data, one CM-LM voice, three scientific data, and four spare tracks. Spare tracks are available for flight qualification data.

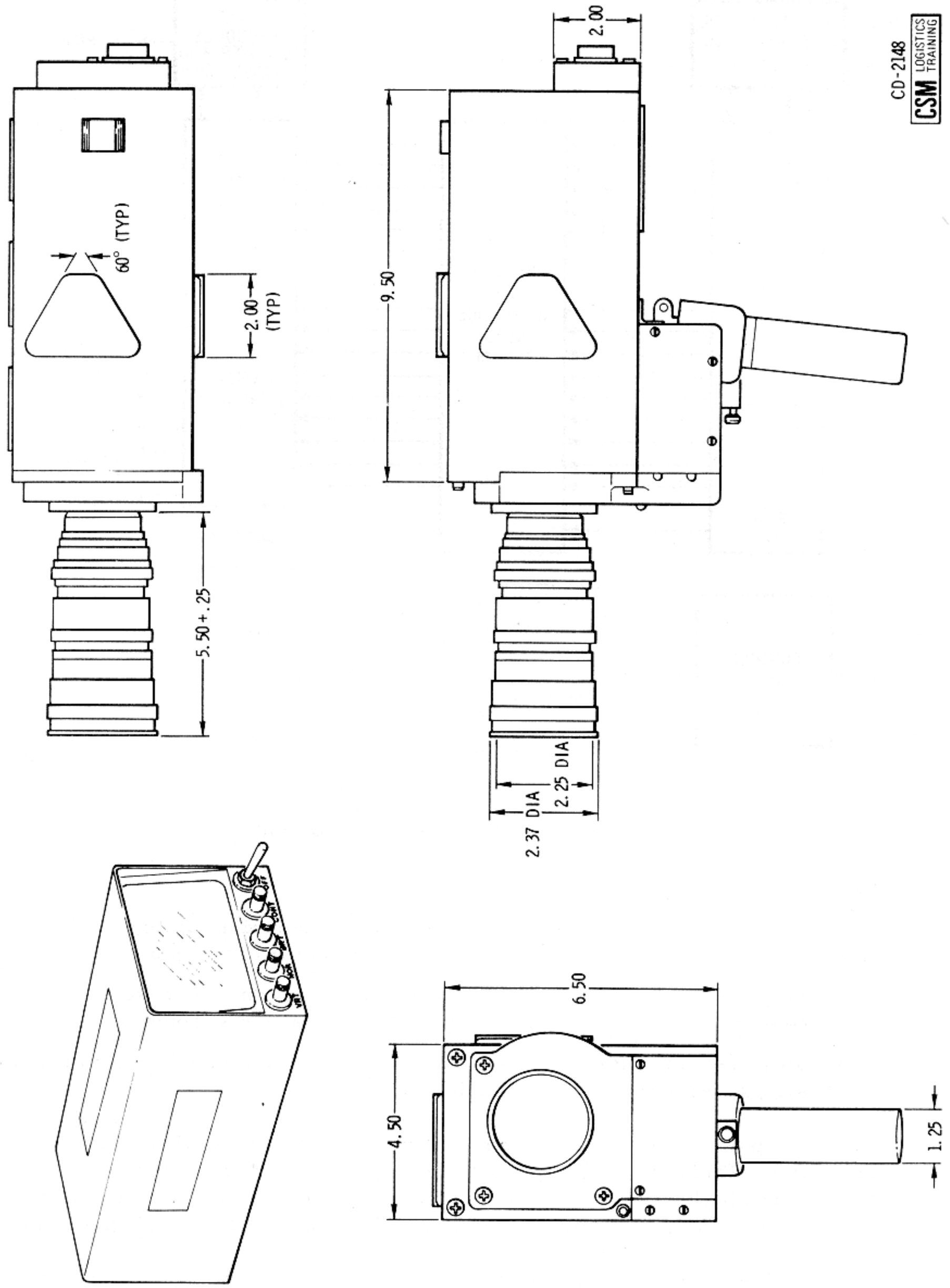

Figure 2.8-12B. Color TV Camera and Monitor

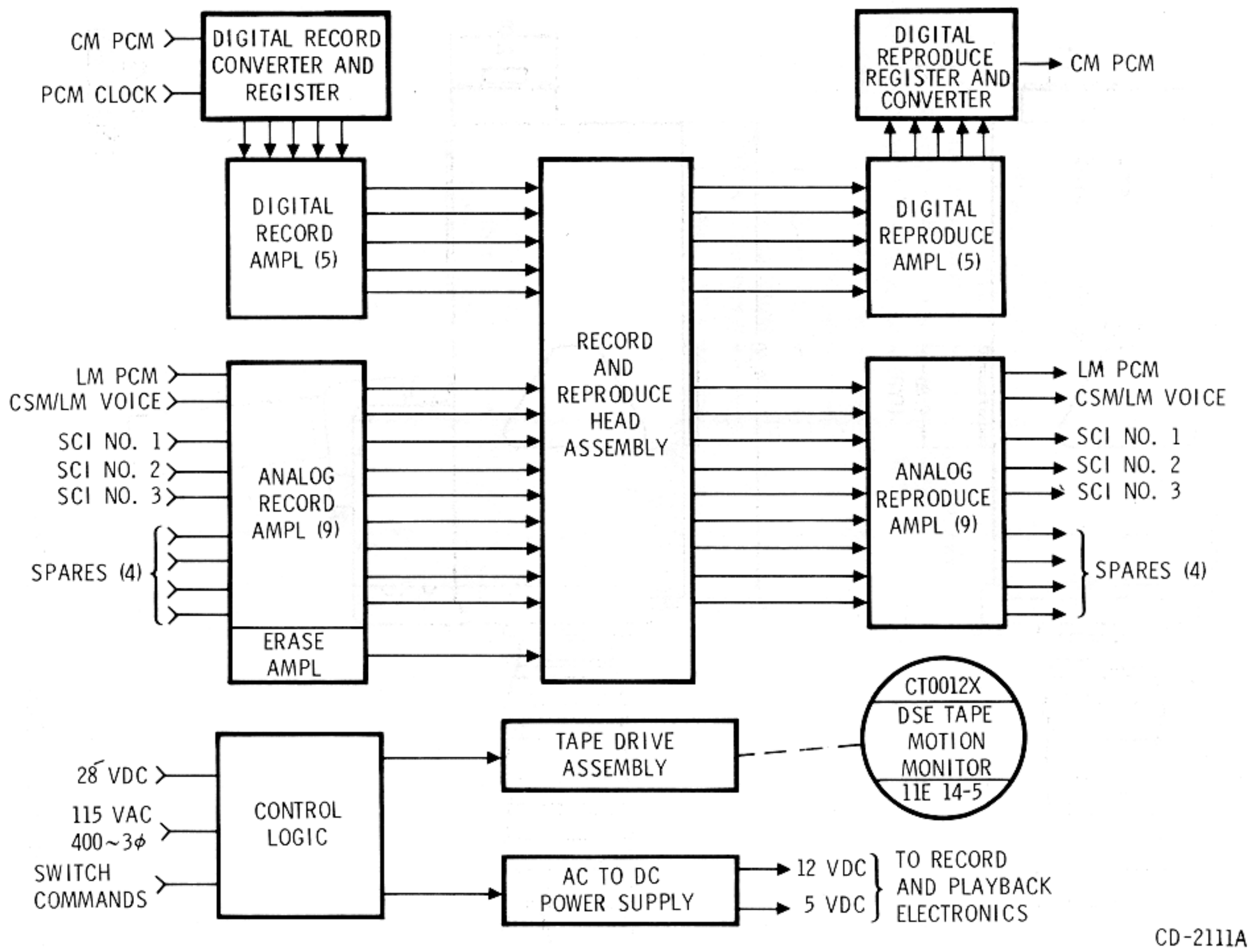

Figure 2.8-13. Data Storage Equipment

Digital Channels.

a. Input parameters, serial to parallel conversion of the digital input is performed by the data storage equipment electronics:

- Single serial NRZ, 51.2 kbs data train, and one 51.2-kc digital timing signal, recorded speed at 15 inches per second
- Single serial NRZ, 1.6 kbs data train, and one 1.6-kc digital time signal, recorded at 3.75 inches per second

b. Output parameters, parallel to serial conversion of the digital output is performed by the data storage equipment electronics.

c. The playback rate of CM PCM is 51.2 kbs for data recorded at 3.75 ips or 15 ips. Playback speeds are 120 ips and 15 ips respectively.

The various operational capabilities and attendant switching positions are shown in the following list.

MDC-3 Switches	RECORD				PLAYBACK				REWIND
	LM PCM	3-SCIs	CSM PCM	LM/CSM Voice	LM PCM	3-SCIs	CSM PCM	LM/CSM Voice	
S-BAND AUX TAPE	Normally off	Normally off	Normally off	Normally off	TAPE	TAPE	TAPE	TAPE	Normally off
S-BAND AUX TV	N/A	Off or TV	N/A	N/A	Tape sw override	Tape sw override	Tape sw override	Tape sw override	N/A
VHF/AM A	Normally SIMPLEX	Normally SIMPLEX	Normally SIMPLEX	Normally SIMPLEX	N/A	N/A	N/A	N/A	N/A
VHF/AM RCV only	B DATA	N/A	N/A	Off	N/A	N/A	N/A	N/A	N/A
TAPE RECORDER/ PCM/ANLG	N/A	N/A	N/A	N/A	LM PCM	PCM/ANLG	PCM/ANLG	PCM/ANLG	N/A
TAPE RECORDER/ RECORD	RECORD	RECORD	RECORD	RECORD	PLAY	PLAY	PLAY	PLAY	Normally off
TAPE RECORDER/ FWD	FWD	FWD	FWD	FWD	FWD after REWIND	FWD after REWIND	FWD after REWIND	FWD after REWIND	REWIND
TLM INPUT/PCM	N/A	N/A	High or low	N/A	N/A	N/A	N/A	N/A	N/A

Operational Switching (Figure 2.8-14).

External +28 vdc from the FLT BUS is applied to the TAPE RECORDER - FORWARD/REWIND switch. With this switch in the REWIND position, the tape transport will reverse at 120 ips. The FORWARD position of this switch will also run the tape transport in the forward direction at 120 ips if PLAY or RECORD is not selected. The FORWARD position of the TAPE RECORDER - FORWARD/REWIND switch supplies the excitation to the RECORD/PLAY switch in the FORWARD position. In the RECORD position, the record and erase circuitry is enabled and power is applied to the PCM-HIGH/LOW switch. The recording speed in the HIGH position is 15 ips and in the LOW position the speed is 3.75 ips. In the PLAY position, the reproduce circuitry is enabled and power is applied to the PCM/ANLG/LM PCM switch. The play speed in the PCM/ANLG position is internally selected, whereas the play speed in the LM PCM position is only at 120 ips.

All of the preceding switching functions may be accomplished by the use of real-time commands from the MSFN through the up-data (UDL) equipment.

T/C

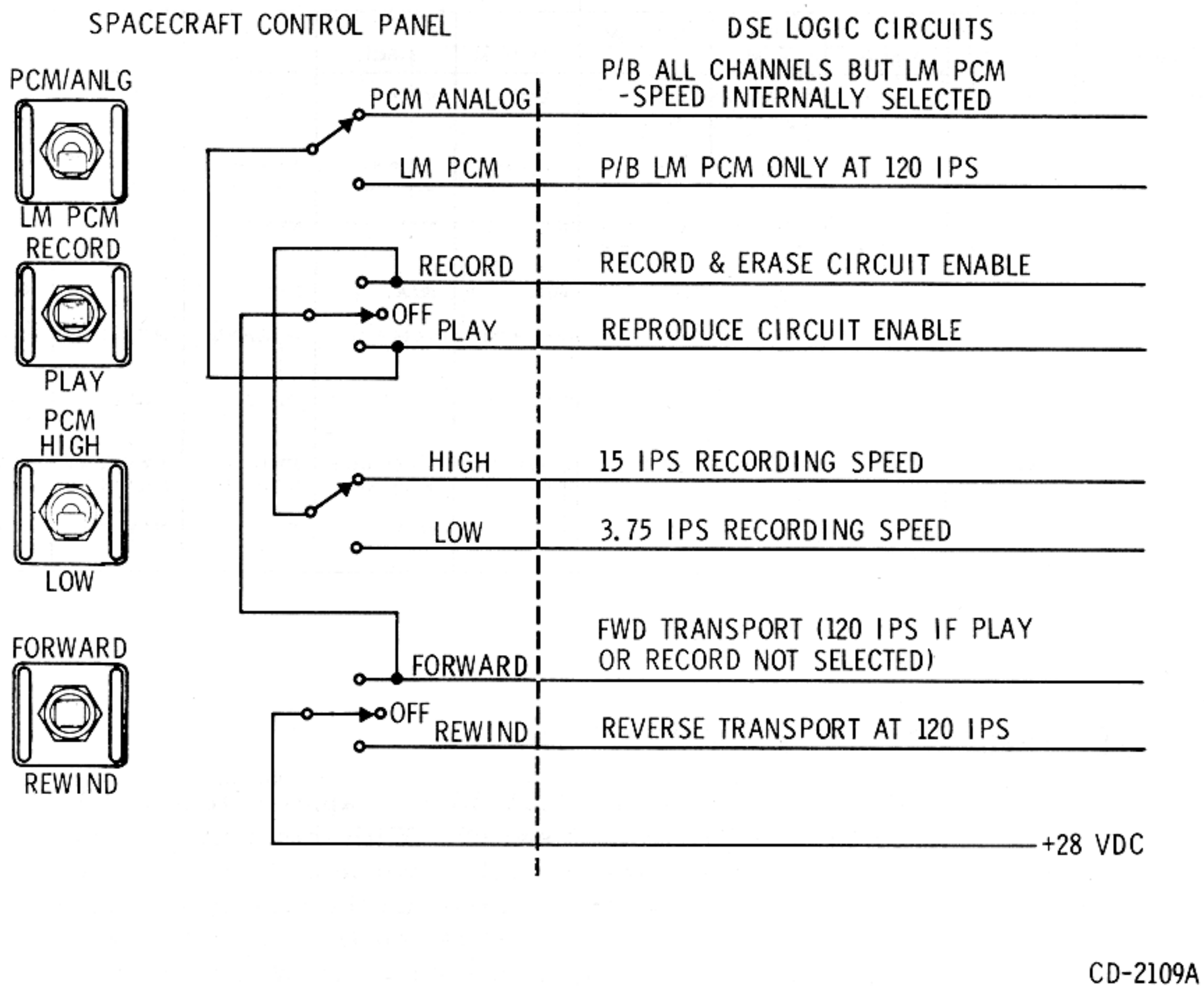

Figure 2.8-14. DSE Simplified Switching Circuits

2.8.3.3.9 Up-Data Link (UDL) Equipment.

The function of the UDL equipment is to receive, verify, and distribute digital updating information sent to the SC by the MSFN at various times throughout the mission to update or change the status of operational systems. The UDL (figure 2.8-15) consists of detecting and decoding circuitry, a buffer storage unit, output relay drivers, and a power supply. The UDL provides the means for MSFN to update the CMC, the CTE, and to select certain vehicle functions. Up-data information is transmitted to the SC as part of the 2-kmc S-band signal. When this signal is received by USBE receiver, the 70-kc subcarrier containing the up-data information is extracted and sent to the up-data discriminator in the PMP. The resulting composite audio frequency signal is routed to the sub-bit detector in the UDL which converts it to a serial digital signal. The digital

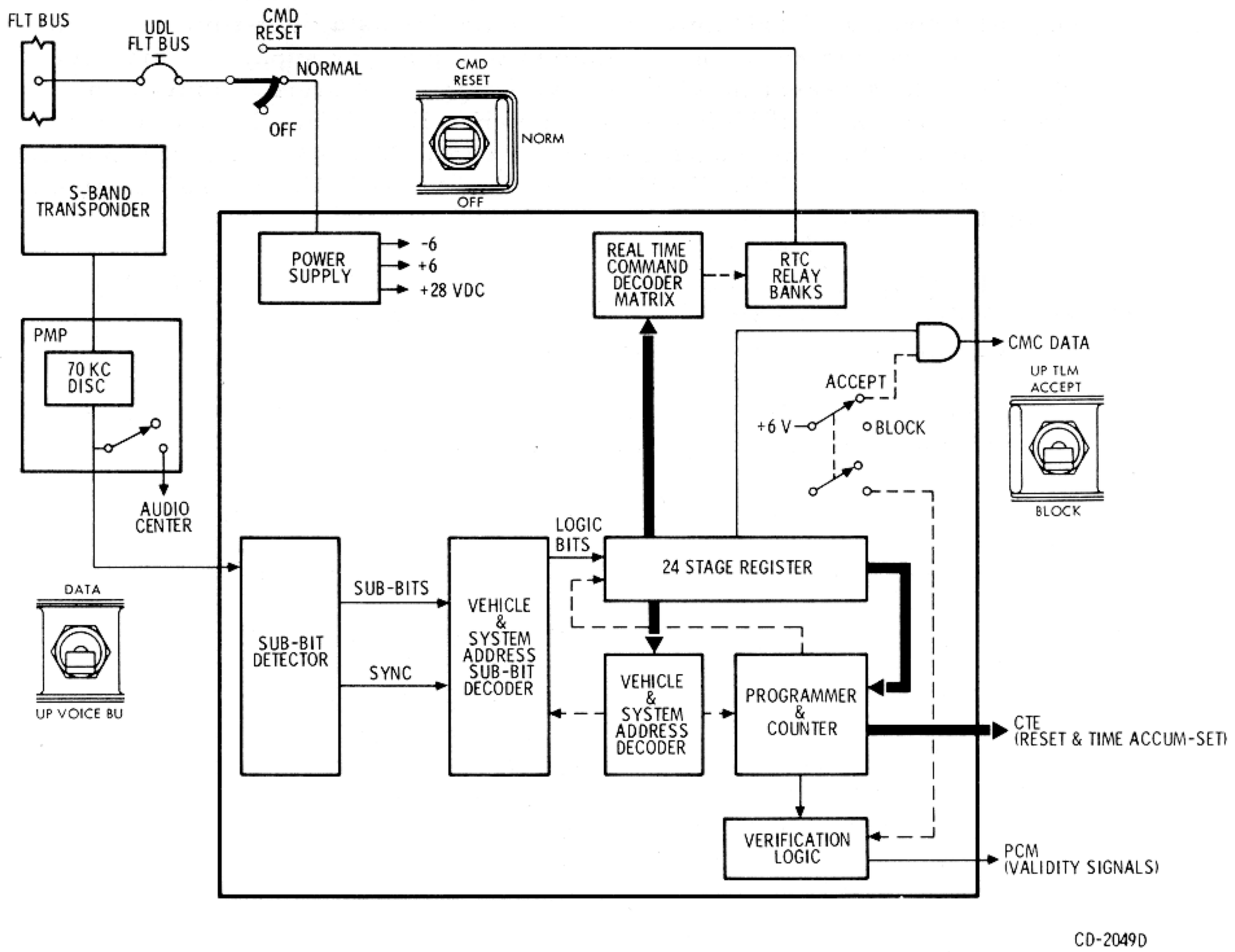

Figure 2.8-15. Up-Data Link Equipment

output from the sub-bit detector is fed to the remaining UDL circuitry, which checks and stores the digital data, determines the proper destination of the data, and transfers it to the appropriate SC system or equipment. The UDL has three controls: two are on MDC-3 under the UP-TLM bracket and the third on MDC-2. The first, a two-position switch, is the DATA-VOICE BU switch. In the DATA position, the 70-kc subcarrier information is routed to the UDL equipment for normal processing. The VOICE BU position routes the 70-kc subcarrier information to the UDL equipment and audio centers, thus providing an alternate path for voice information to be sent in case of failure of the 30-kc subcarrier discriminator.

T/C

The second switch is the CMD RESET/NORMAL/OFF switch. The center, NORMAL, position applies power to the UDL and permits normal operation. The upward position performs a real-time command reset function and keeps power applied to the power supply. This resets all RTC relays except those relays affecting the system A abort light and the crew alarm, so the affected equipment will resume the operational mode dictated by their control switches on the MDC-3. The OFF position removes the power from the UDL equipment. The UDL consumes about 12 watts of 28-vdc power.

The third control, on MDC-2 by the DSKY, is labeled UP-TLM ACCEPT-BLOCK. This two-position switch blocks or routes the UDL message in the command module computer.

The following list gives the real-time commands and their functions. Some functions require two separate commands.

BLOCK II UDL REAL-TIME COMMANDS

Real-Time Commands	Functions
01	Abort Light (System A) On
00	Abort Light (System A) Off
07	Abort Light (System B) On
06	Abort Light (System B) Off
05	Crew Alarm On
04	Crew Alarm Off
02, 17	Spare
03, 12	Spare
03, 13	Spare
02, 16	*Spare
22, 27	S-Band Ranging On
23	S-Band Ranging Off
22, 26	*Astronaut Control (S-Band Ranging)
32, 37	S-Band PCM Mode On
33, 37	S-Band PCM Mode Off
32, 36	*Astronaut Control (S-Band PCM Mode)
42, 47	S-Band P.A. High On
43, 46	S-Band By-Pass Mode
43, 47	S-Band P.A. Low On
42, 46	*Astronaut Control (S-Band P.A. Mode)
52, 57	Tape Playback PCM/Analog Mode
53	Tape Playback LEM/PCM Mode
52, 56	*Astronaut Control (Tape Playback Mode)
62, 67	Tape Recorder - Record Mode
63, 66	Tape Recorder - Off Mode

*Resets previously set relays so that equipment returns to mode shown on control panels.

Real-Time Commands	Functions
63, 67	Tape Recorder - Playback Mode
62, 66	*Astronaut Control (Tape Recorder Playback/Record Selection)
72, 77	Tape Recorder - Transport Forward
73, 76	Tape Recorder - Power Off
73, 77	Tape Recorder - Transport Rewind
72, 76	*Astronaut Control (Tape Transport)
65	PCM Data Rate Low
64, 71	PCM Data Rate High
64, 70	*Astronaut Control (PCM Data Rate)
41, 45	S-Band Tape Mode
41, 44	S-Band Tape Off
40, 51	S-Band Back-Up Down Voice
40, 50	*Astronaut Control (S-Band)
75	D OMNI Antenna ON
74	Astronaut Control (S-Band Antenna)

*Resets previously set relays so that equipment returns to mode shown on control panels.

2.8.3.4 RF Electronics Equipment Group.

The RF electronics equipment group includes all T/C equipment which functions as RF transmitters or receivers. The antennas used by this equipment are mentioned only briefly in this paragraph. Refer to paragraph 2.8.3.5 for more information on the antennas.

T/C

2.8.3.4.1 VHF/AM Transmitter-Receiver Equipment (Figure 2.8-16).

The VHF/AM transmitter-receiver equipment provides the capability for the following:

- Two-way voice communications with MSFN, LM, EVA, and recovery forces.
- Relay of two-way voice from either LM or EVA to MSFN (via S-band/MSFN link)
- Ranging with the LM
- Reception of PCM data from LM
- Reception of biomed from EVA.

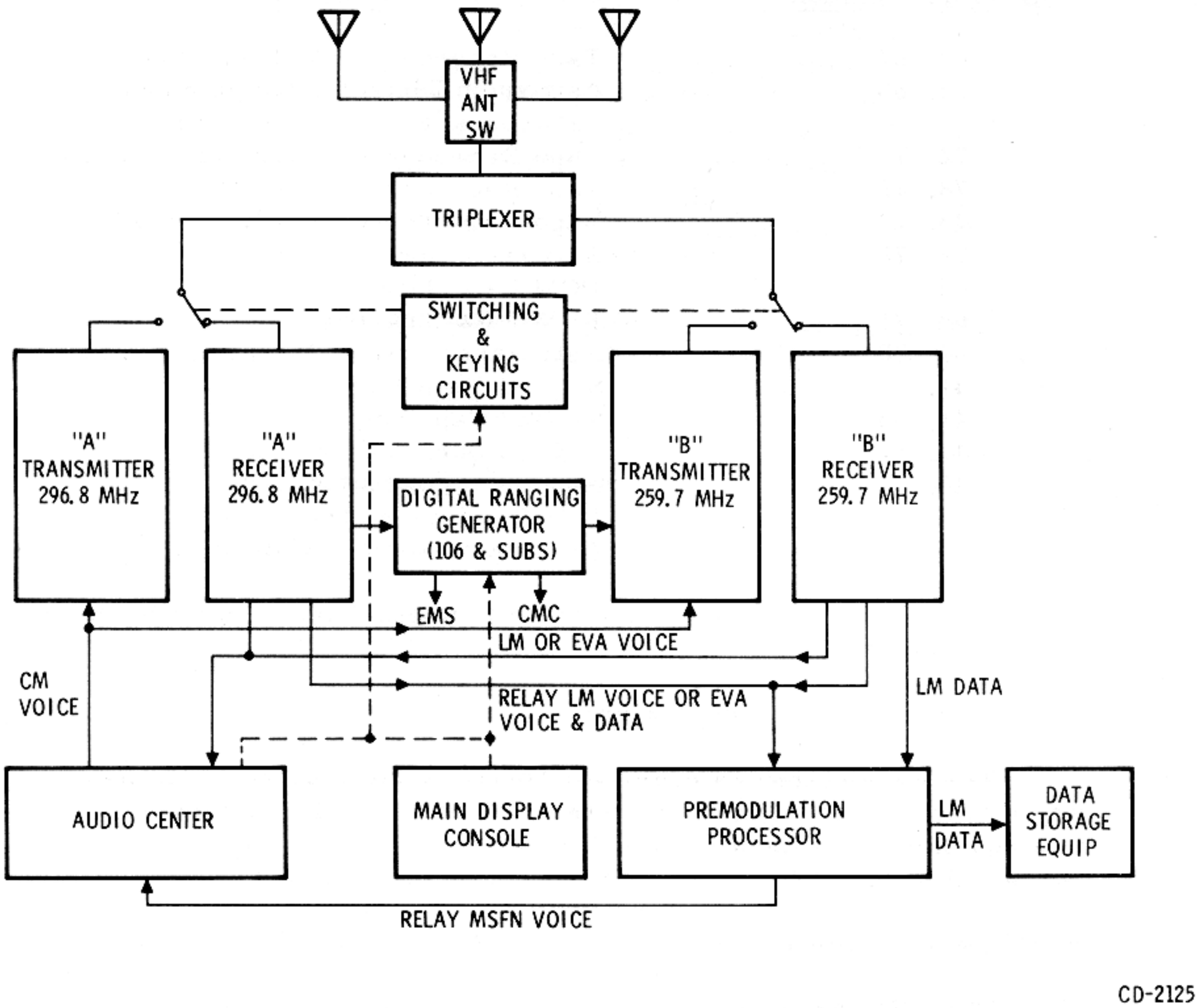

Figure 2.8-16. VHF-AM Block Diagram

The equipment is contained in a single enclosure consisting of 11 sub-assemblies, 2 coax relays, and 2 bandpass filters mounted within a three-piece hermetically sealed case in the lower equipment bay.

The equipment group provides two independent VHF/AM transmitters and two independent VHF/AM receivers. One transmitter and receiver will provide for transmission and reception of voice communications on a preassigned frequency of 296.8 mc. One transmitter and receiver will provide for transmission of voice communications or reception of voice communcations and data on a preassigned frequency of 259.7 mc. Complete isolation of the receiver circuits up to the final common outputs is provided. A short or open on any output will not degrade the other outputs.

Various modes of operation are possible in both the simplex and duplex configurations:

- Simplex A - Transmit and receive on 296.8 mc for voice only
- Simplex B - Transmit and receive on 259.7 mc for voice only
- Duplex A - Transmit on 296.8 mc and receive on 259.7 mc for voice and biomed data
- Duplex B - Transmit on 259.7 mc and receive on 296.8 mc for voice and ranging
- Receive A - Receive on 296.8 mc only
- Receive B - Receive LM data on 259.7 mc only
- Relay - Interfaces with S-band system for relay to MSFN.

These modes may also be used as a backup VHF recovery beacon transmitting on 296.8 or 259.7 mc.

The VHF/AM transmitter-receiver is controlled by the VHF-AM controls on panel No. 3 of the main display console (S43, S44, and S71). The DUPLEX-off-SIMPLEX switches activate the receivers and transmitters by applying 28-volt d-c power. About 6 watts of power are required in these modes with the transmitter in standby and about 36 watts when keyed. In the OFF position, no power will be supplied to the equipment. The RCV ONLY B DATA/OFF/A switch activates the receivers only. When the A position is selected, about 2 watts of 28-volt d-c power are supplied to the 296.8-mc receiver. When the B DATA position is selected, about 2 watts of 28-volt d-c power are supplied to the 259.7-mc receiver and the LM data amplifier.

After being selected, the VHF/AM transmitters can be enabled either by voice-operated relay (VOX) or by manually depressing the XMIT switch on the comm cable or rotational controller. The squelch control varies the level of squelch sensitivity and is located on panel 3 of the main display console.

The transmitters and receivers interface with the main display console (power control), the audio center (audio inputs, outputs and PTT functions), and the triplexer (RF inputs and outputs). The equipment is connected through the triplexer and antenna control switch to either of the VHF omniantennas in the service module or the VHF recovery antenna No. 2 in the command module.

2.8.3.4.2 Digital Ranging Generator (VHF Ranging).

The function of the VHF ranging system is to aid lunar rendezvous of the CSM with the LM. This is a backup system and will be needed only if the LM radar fails, or the LM propulsion system would prove incapable of effecting rendezvous. This system uses the existing VHF/AM equipment, and incorporates the use of a digital ranging generator (DRG).

- Location: Lower Equipment Bay
- Electrical Power Requirements

  Voltage input: 28 vdc
  Power input: 25 watts

- Mechanical Characteristics

  Weight: 7.0 pounds
  Volume: 200 cubic inches (approximately)

The DRG generates a tone for transmission over the VHF/AM 259.7-mc transmitter, and receives the turn-around range tone from the LM via the VHF/AM 296.8-mc receiver. A range tracker, in the DRG, will compute the range by comparing the difference between the transmitted and received tone, and display this range, real-time, on the entry monitoring system (EMS). In addition, the range data will also be sent to the command module computer (CMC), at a rate of once a minute, initiated by a command from the CMC. This information will be displayed on the DSKY. Both displays will be shown in units of 1/100-nautical mile.

This system is activated by turning on the VHF RANGING switch, on MDC-3. This switch applies +28-vdc power to the DRG, as well as applying a ground to the keying circuit to key the VHF/AM 259.7-mc transmitter, for ranging tone transmission. If the TRACKER alarm light on the DSKY comes ON, this indicates that the data on the DSKY is incorrect. At the same time the display on the EMS will be reset to read zero. To restart ranging, the VHF RANGING—RESET-NORMAL switch, on the commander's audio center panel, is put to RESET, the acquisition phase is started, and tracking will be established.

2.8.3.4.3 Unified S-Band Equipment (USBE).

The USBE (figure 2.8-17) consists of two transponders, an FM transmitter, and power supply contained in a single electronic package in the lower equipment bay. The USBE will be used for voice communications, tracking and ranging, transmission of PCM data, and reception of up-data. The USBE also provides the sole means for transmission of TV.

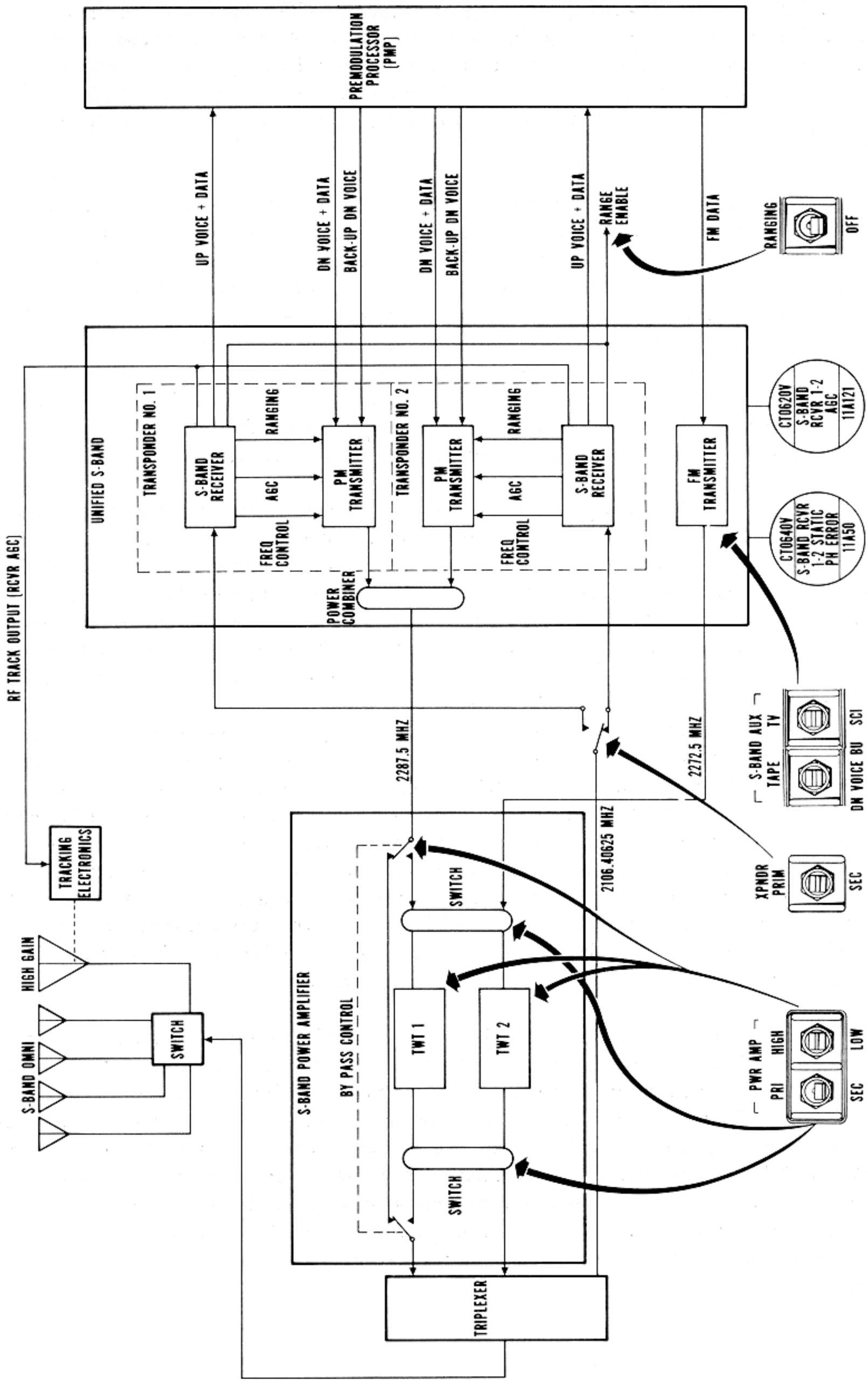

Figure 2.8-17. Unified S-Band Equipment

T/C

The USBE tracking method employed is the two-way or double-doppler method. In this technique, a stable carrier of known frequency is transmitted to the SC where it is received by the phase-locked receiver, multiplied by a known ratio, and then re-transmitted to the MSFN for comparison. Because of this capability, the USBE is also referred to as the S-band transponder.

For determining SC range, the MSFN phase-modulates the transmitted carrier with a pseudo-random noise (PRN) binary ranging code. This code is detected by the SC USBE receiver and used to phase-modulate the carrier transmitted to the MSFN. The MSFN receives the carrier and measures the amount of time delay between transmission of the code and reception of the same code, thereby obtaining an accurate measurement of range. Once established, this range can be continually updated by the double-doppler measurements discussed earlier. The MSFN can also transmit up-data commands and voice signals to the SC USBE by means of two subcarriers: 70 kc for up-data and 30 kc for up-voice.

The USBE transponder is a double-superheterodyne phase-lock loop receiver that accepts a 2106.4-mc, phase-modulated RF signal containing the up-data and up-voice subcarriers, and a pseudo-random noise (PRN) code when ranging is desired. This signal is supplied to the receiver (figure 2.8-18) via the triplexer in the S-band power amplifier equipment and presented to three separate detectors: the narrow band loop phase detector, the narrow band coherent amplitude detector, and the wide band phase detector. In the wide band phase detector, the 9.531-mc IF is detected; and the 70-kc up-data and 30-kc up-voice subcarriers are extracted, amplified, and routed to the up-data and up-voice discriminators in the PMP equipment. Also, when operating in a ranging mode, the PRN ranging signal is detected, filtered, and routed to the USBE transmitter as a signal input to the phase modulator. In the loop-phase detector, the 9.531-mc IF signal is filtered and detected by comparing it with the loop reference frequency. The resulting d-c output is used to control the frequency of the 19.0625-mc voltage-controlled oscillator (VCO). The output of the VCO is used as the reference frequency for receiver circuits as well as for the transmitter.

The coherent amplitude detector (CAD) provides the automatic gain control (AGC) for receiver sensitivity control. In addition, it detects the amplitude modulation of the carrier introduced by the high-gain antenna system. This detected output is returned to the antenna control system to point the high-gain antenna to the earth station. An additional function of the CAD is to select the auxiliary oscillator to provide a stable carrier for the transmitter, whenever the receiver loses lock. The AGC circuitry also supplies a signal to the S-BAND ANT S-meter located on the lower right on MDC-2. A received relative signal strength is indicated by this meter.

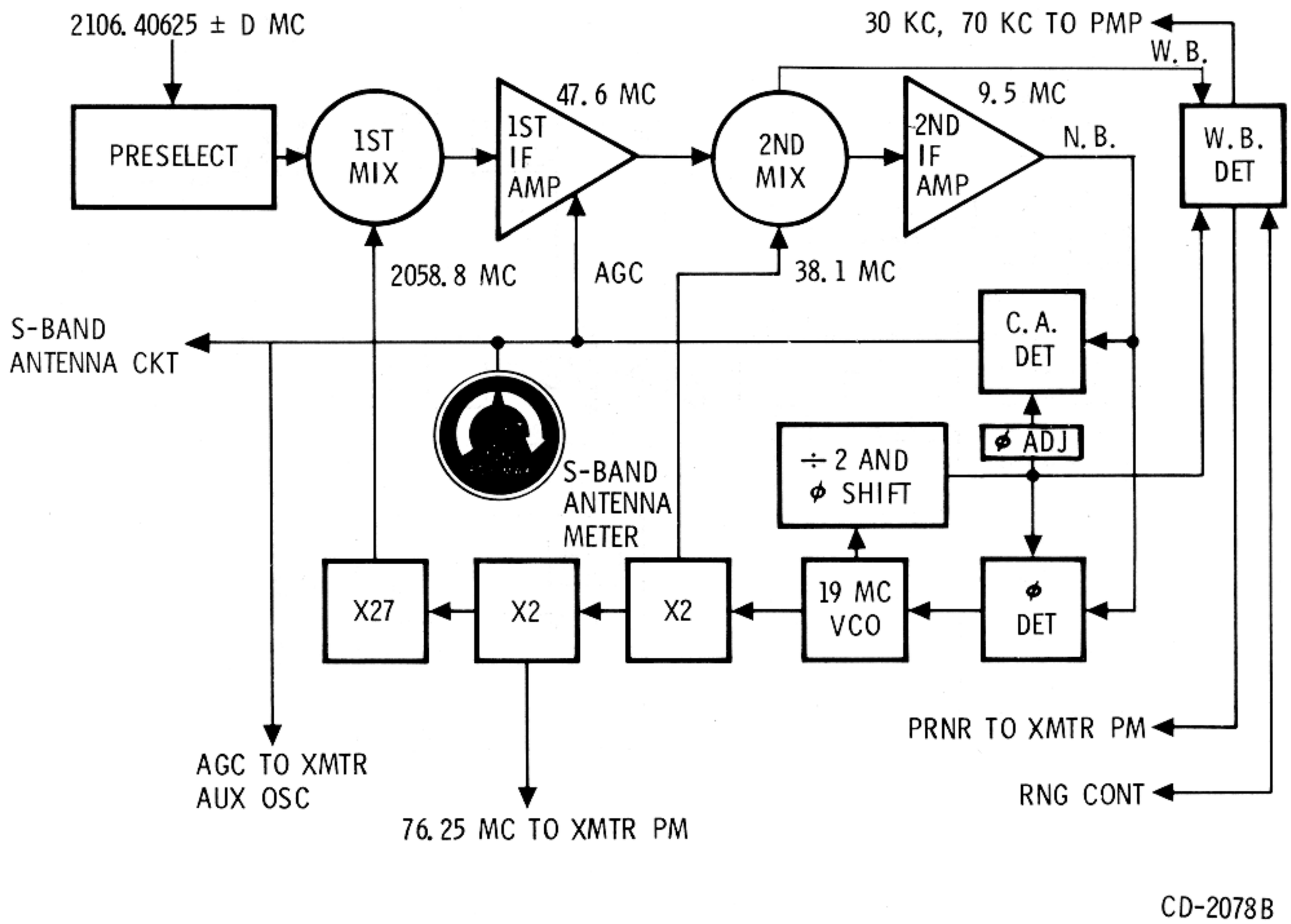

Figure 2.8-18. S-Band Receiver

The USBE transponders are capable of transmitting a 2287.5-mc phase-modulated signal. The initial transmitter frequency is obtained from one of two sources: the VCO in the phase-locked USBE receiver or the auxiliary oscillator in the transmitter. Selection of the excitation is controlled by the CAD. If ranging has been selected, the up-link information is routed from the receiver wide band detector to the phase modulator in the transponder transmitter (figure 2.8-19). The phase modulator also can receive premodulated CSM voice and PCM data from the PMP in a normal mode or backup voice in event of a malfunction. The phase modulator signal is amplified to 3 watts by a power amplifier and sent into a X30 variactor multiplier, where much of this power is dissipated. The final power output through the power combiner is about 250 mw. About 20 watts of 3-phase 400-cycle a-c power and 2 watts of 28-vdc power are required by each transponder.

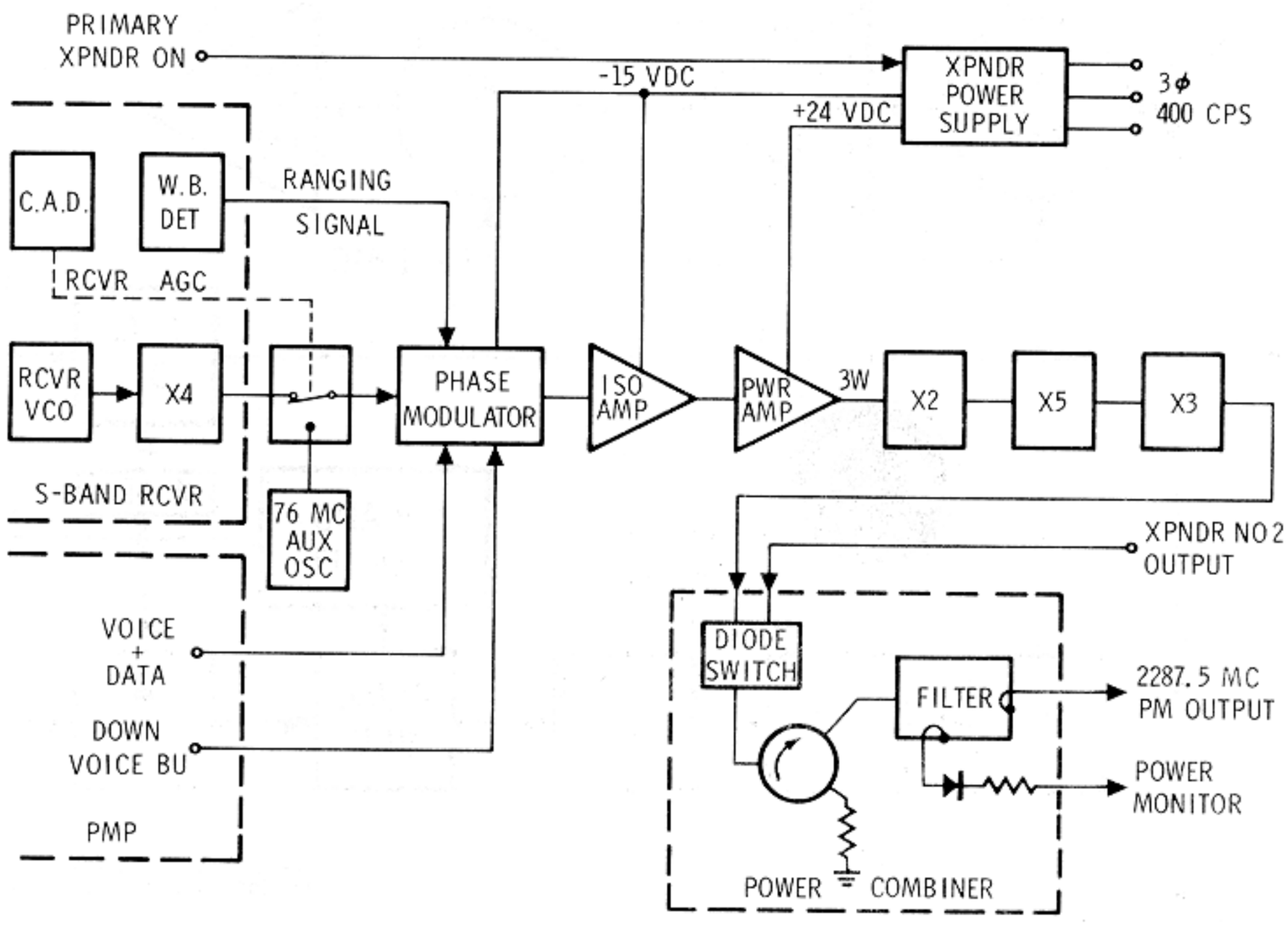

Figure 2.8-19. S-Band PM Transmitter

The USBE also contains a separate FM transmitter which operates at 2272.5 mc (figure 2.8-20). This separate S-band transmitter permits time-shared scientific, television, or playback data to be sent to the MSFN while voice, real-time data, and ranging are being sent simultaneously via the transponder. The transmitter VCO receives modulation from the FM mixer or TV output of the PMP. The frequency modulator signal passes through two stages of amplification and then is sent through three multipliers, X2, X3, and X5 respectively. A ferrite circulator is used on the output of the final multiplier to preclude reflected power from feeding back and degrading the signal. The output power is approximately 100 mw. The USBE FM transmitter requires about 8 watts of 3-phase 400-cycle a-c power and 1 watt of 28-vdc power.

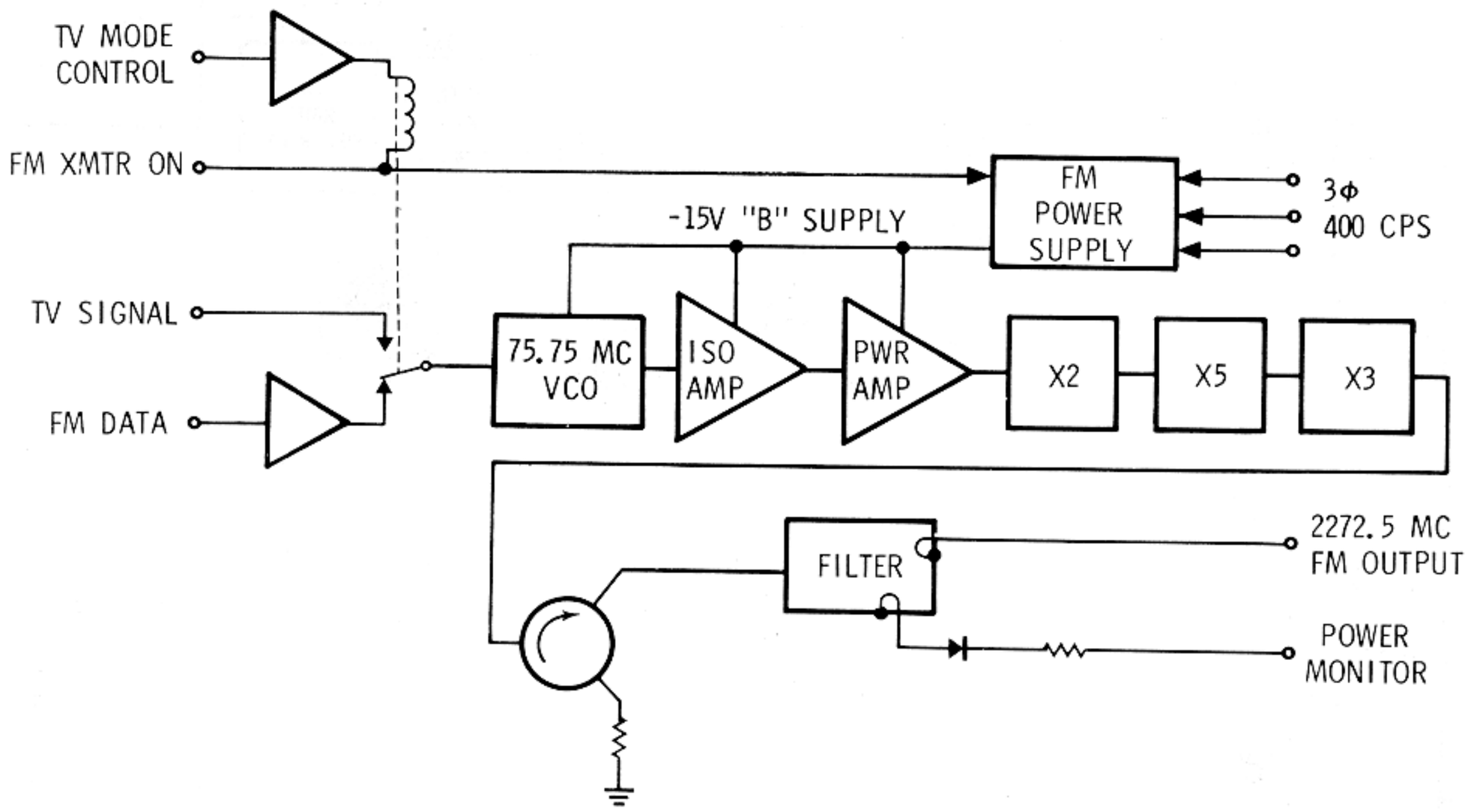

Figure 2.8-20. S-Band FM Transmitter

Operational configurations of the USBE are controlled by the S-band switches on MDC-3. Individual functions are described in the Controls and Displays, section 3, while control circuits involved with the USBE are shown in Figure 2.8-21.

2.8.3.4.4 S-Band Power Amplifier Equipment.

The S-band power amplifier (PA) equipment (figure 2.8-22) is used to amplify the RF output from the USBE transmitters when additional signal strength is required for adequate reception of the S-band signal by MSFN. The amplifier equipment consists of a triplexer, two traveling-wave tubes for amplification, power supplies, and the necessary switching relays and control circuitry. The S-band PA is contained in single electronics package located in the lower equipment bay. Each power amplifier

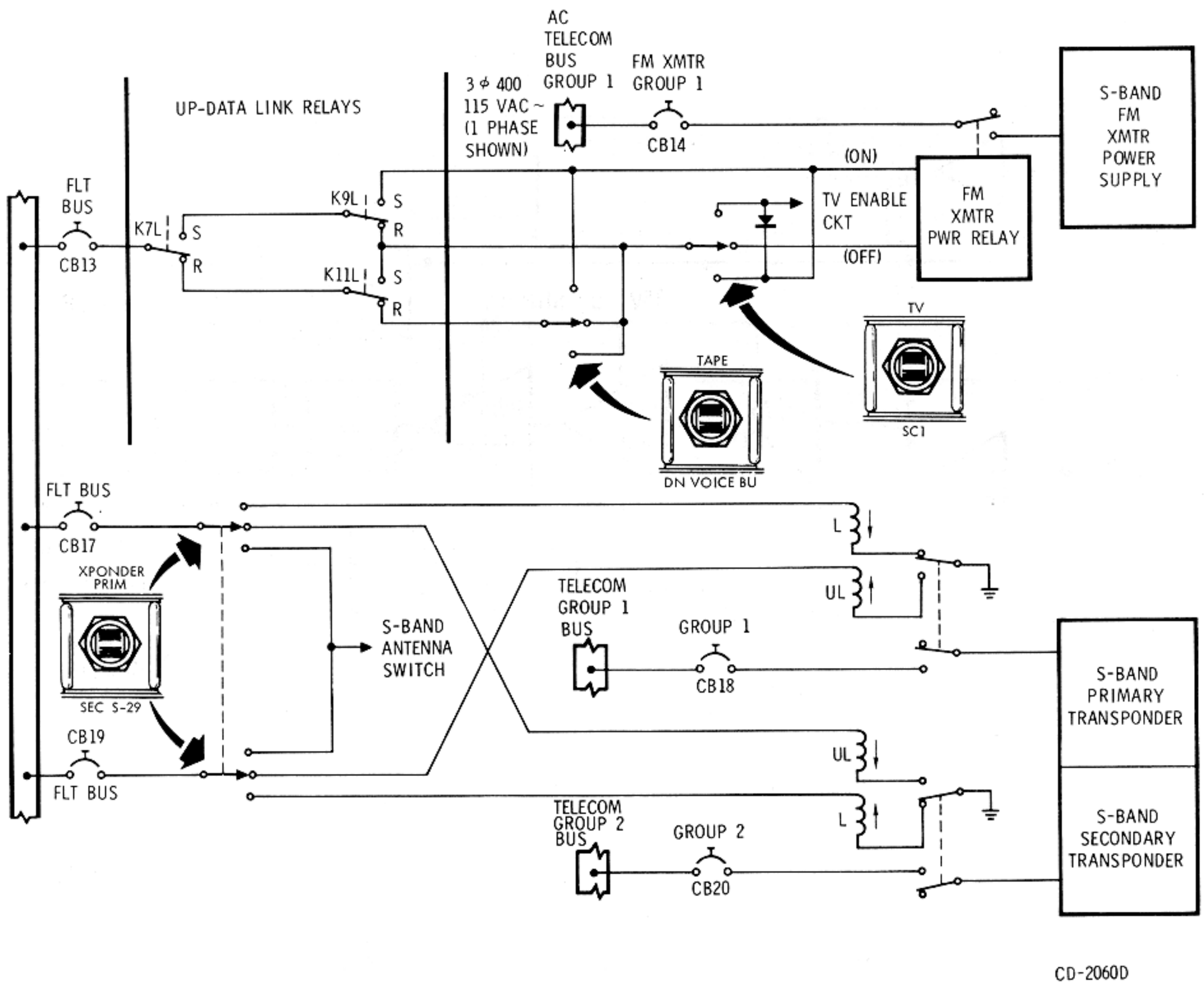

Figure 2.8-21. Unified S-Band Switching

requires about 15 watts of warm-up, 45 watts at low-power and 90 watts at high-power of 3-phase 400-cycle a-c power and about 2.5 watts of 28-vdc power.

All received and transmitted S-band signals pass through the S-band PA triplexer. The 2106.4-mc S-band carrier, received by the SC, enters the S-band PA triplexer from the S-band antenna equipment. The triplexer passes the signal straight through to the USBE receiver. The 2287.5-mc output signal from the USBE transponder enters the S-band PA where it is either bypassed directly to the triplexer and out to the S-band antenna equipment, or amplified first and then fed to the triplexer. There are two power amplifier modes of operation: low power and high power. The high-power mode is automatically chosen for the power amplifier connected to the FM transmitter.

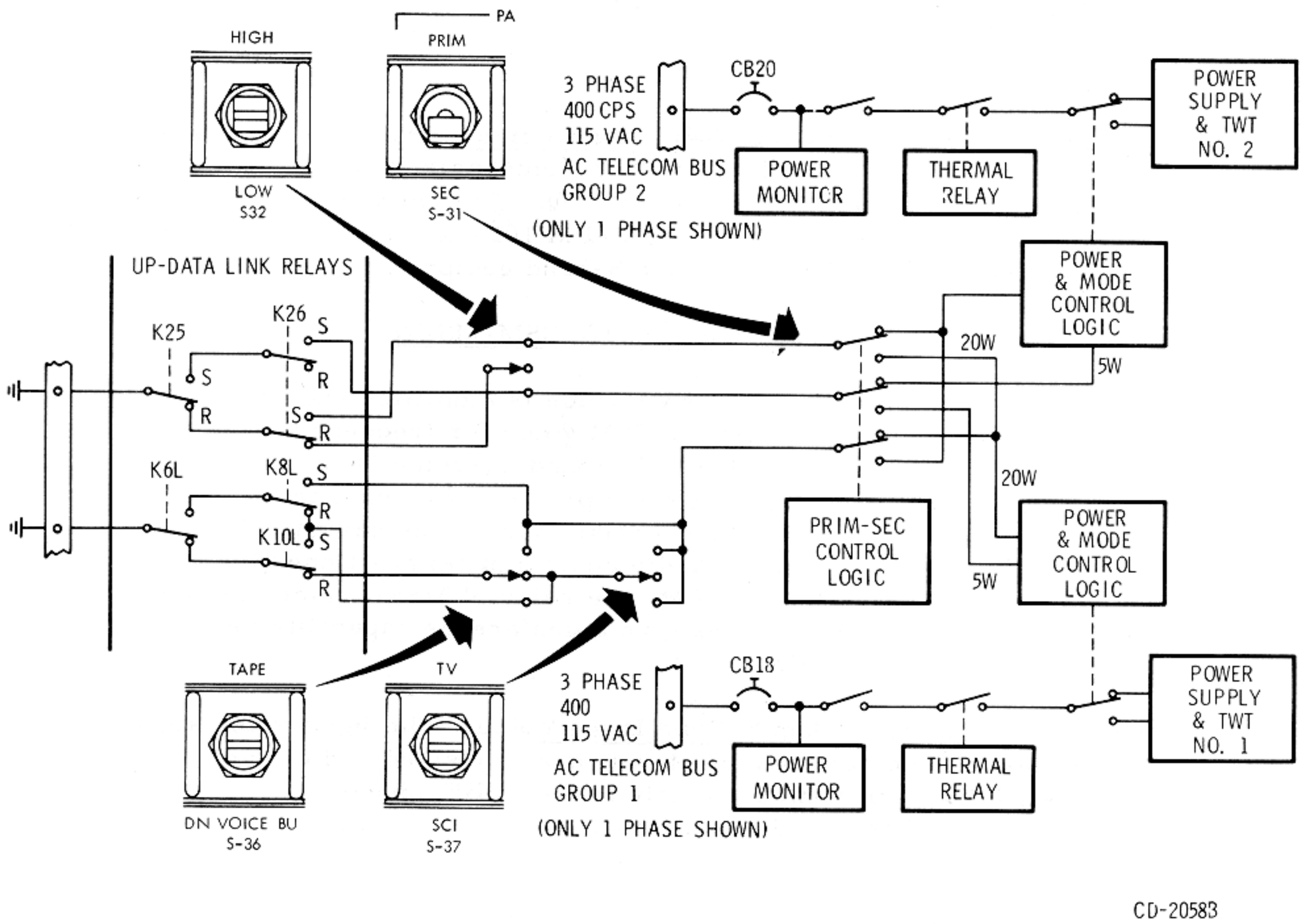

Figure 2.8-22. S-Band Power Amplifier Control and Power Switching

Power for the power amplifier comes from the telecomm group circuit breakers 1 and 2. Separate 3-phase 115-volt 400-cps power sources are employed to drive each traveling wave tube and its attendant power supply. Figure 2.8-22 shows the controlling circuits involved with power distribution to the power amplifier.

2.8.3.4.5 Premodulation Processor Equipment.

The premodulation processor (PMP) equipment provides the interface connection between the airborne data-gathering equipment and the RF electronics. The PMP accomplishes signal modulation and demodulation, signal mixing, and the proper switching of signals so that the correct intelligence corresponding to a given mode of operation is transmitted.

These modes, which are listed in this section, are shown on the S-band operational spectrum (figure 2.8-25). The PMP uses a maximum power of 12.5-watt at 28-volt d-c.

Voice

Command Module Normal S-Band Down Voice. The input voice signal from the audio center equipment is pre-emphasized, clipped, and frequency modulates the 1250-kc voice VCO. The voice subcarrier may be frequency-multiplexed with the PCM/PM 1024-kc subcarrier for PM transmission via the USBE (unified S-band equipment).

Voice Conference Between LM or EVA/CSM/MSFN.

The received VHF/AM LM or EVA voice is amplified and linearly mixed (time-shared) with the real-time CSM voice for frequency modulating the 1250-kc voice VCO. The received S-band up-voice 30-kc subcarrier is demodulated and parallel outputs are provided for input to the audio center equipment and for the navigator's mike input to the navigator's audio center. With the navigator's audio control panel positioned for VHF/AM VOX transmission to EVA or LM, the relay of MSFN voice may be accomplished. The above provisions give a conference capability between LM or EVA, CSM, and MSFN.

Command Module Backup S-Band Down Voice. The input voice signal from the audio center equipment is pre-emphasized and clipped. The voice signal is then routed directly to the USBE, bypassing the voice modulator, for base band phase-modulation (PM) on the S-band carrier transmission to MSFN.

Recorded CSM Intercom/LM Voice. An AGC circuit is provided to process LM voice which is linearly mixed with the input voice signal from the CSM intercom bus. An isolation amplifier is used at the CSM INTERCOM/LM voice output for recording in the DSE (data storage equipment).

MSFN to CSM S-Band Normal Up-Voice. The MSFN up-voice is PM/FM voice via S-band. The received, frequency-modulated 30-kc subcarrier from the USBE is bandpass-filtered and demodulated in the PMP. The output voice signal is low-pass filtered and routed to the audio center equipment input.

MSFN to CM S-Band Backup Up-Voice. The MSFN backup up-voice is PM/FM voice via S-band. The MSFN voice is switched from the 30-kc subcarrier to the 70-kc subcarrier and linearly mixed with the up-data. This bypasses the up-voice detector in the PMP.

CSM INTERCOM/LM Voice Playback. The playback-to-record ratio may be either 32:1 or 1:1 dependent upon the CSM PCM recorded bit rate. The input signal from the DSE is limited, filtered, and frequency-multiplexed with the three scientific subcarriers and stored PCM data on the 1024-kc subcarrier for FM transmission via the USBE.

Command Module Television. The CSM television camera input signal is a direct dc-coupled output signal to the USBE for FM base band transmission. An additional isolation amplifier attenuator circuit is provided for ac-coupled output to the spacecraft umbilical.

Real-Time Telemetry.

Command Module PCM Data. The CSM PCM data input signal biphase modulates the 1024-kc subcarrier. The subcarrier is filtered and frequency-multiplexed with the voice 1250-kc subcarrier. The output signal phase-modulates (PM) the carrier for transmission via the USBE.

EVA Biomedical Data Relay Via S-Band. The relay of EVA biomed will be accomplished simultaneously with CSM or EVA voice in the same manner as described in the voice conference mode.

MSFN to CSM S-Band Up-Data. The up-data signal is processed the same as up-voice except the subcarrier center frequency is 70 kc and the output is routed to the up-data link decoder.

Scientific Analog Data. Three real-time scientific analog telemetry inputs frequency-modulate three subcarrier oscillators. The three real-time subcarrier signals are mixed and the composite signal frequency-modulates the S-band carrier for FM transmission via the USBE.

T/C

Recorded Telemetry.

CM PCM Stored Data. The CSM stored PCM TLM data biphase modulates the auxiliary 1024-kc sine wave subcarrier. This subcarrier is frequency-multiplexed with the playback of scientific data and LM/INTERCOM voice for modulation of the S-band FM modulator and transmission to MSFN.

LM Stored Data. The LM stored data is played back at 32:1, linearly attenuated and directly modulated base band on the S-band FM carrier.

Scientific Stored Analog Data. The stored scientific analog data frequency-modulates three subcarrier oscillators (SCO). The SCOs are frequency-multiplexed with the stored PCM/TLM 1024-kc subcarrier and the LM/INTERCOM voice playback signal. The composite signal frequency-modulates the S-band equipment.

CM to MSFN Emergency Key. To provide a keyed output for emergency key communications, the 512-kc CTE clock input may be keyed by depressing the XMIT side of the rocker switch located on the astronaut's comm cable. The key closure controls a gated amplifier from which the keyed signal is routed to the USBE. A 400-cps sidetone is also keyed by the PTT. This signal is mixed into the PMP up-voice output circuitry and routed through the audio center to the earphones. The S-BAND-T/R switch on the audio control panel is set to T/R or REC.

Redundancy.

CM Backup S-Band Down Voice. The CM voice input is pre-emphasized, clipped, and routed directly to the S-band for PM transmission, bypassing the PMP voice modulator.

CM Auxiliary PCM Telemetry Subcarrier Modulator. The real-time PCM TLM input may be switched by S54 (AUX position) to the auxiliary biphase modulator with the output being switched to the PMP PM MIXER output for S-band PM transmission and to the FM mixer output for S-band FM transmission.

MSFN to CM S-Band Backup Up-Voice. The MSFN voice is placed on the 70-kc up-data subcarrier. This enables the use of the 70-kc subcarrier for time-shared voice and data.

Auxiliary Power Supply. The PMP has redundant switchable regulators to provide power to all PMP circuitry. When switch S54 is in the AUX position, the auxiliary +18-volt d-c regulator is in use. Also the auxiliary 1.024-mc biphase modulator which normally handles stored CM PCM data is switched to handle real-time CM PCM data.

PMP Operational Modes and Output Levels. Output signals are provided in combinations and levels as described in the following. Control panel switches, used to achieve the various modes are illustrated in the block diagram (figure 2.8-23).

Primary Power Control. When S54 switch is in the NORMAL position, power is supplied to all PMP circuitry from the normal +18-volt regulator. When switch S54 is in AUX position, auxiliary +18-volt regulator is used. Also the auxiliary 1.024-mc biphase modulator which normally handles stored CM/PCM data is switched to handle real-time CM/PCM data.

Scientific Data Output to DSE. The three R/T scientific analog data signals are supplied to the DSE through the PMP except when switch S37 is in the SCI position.

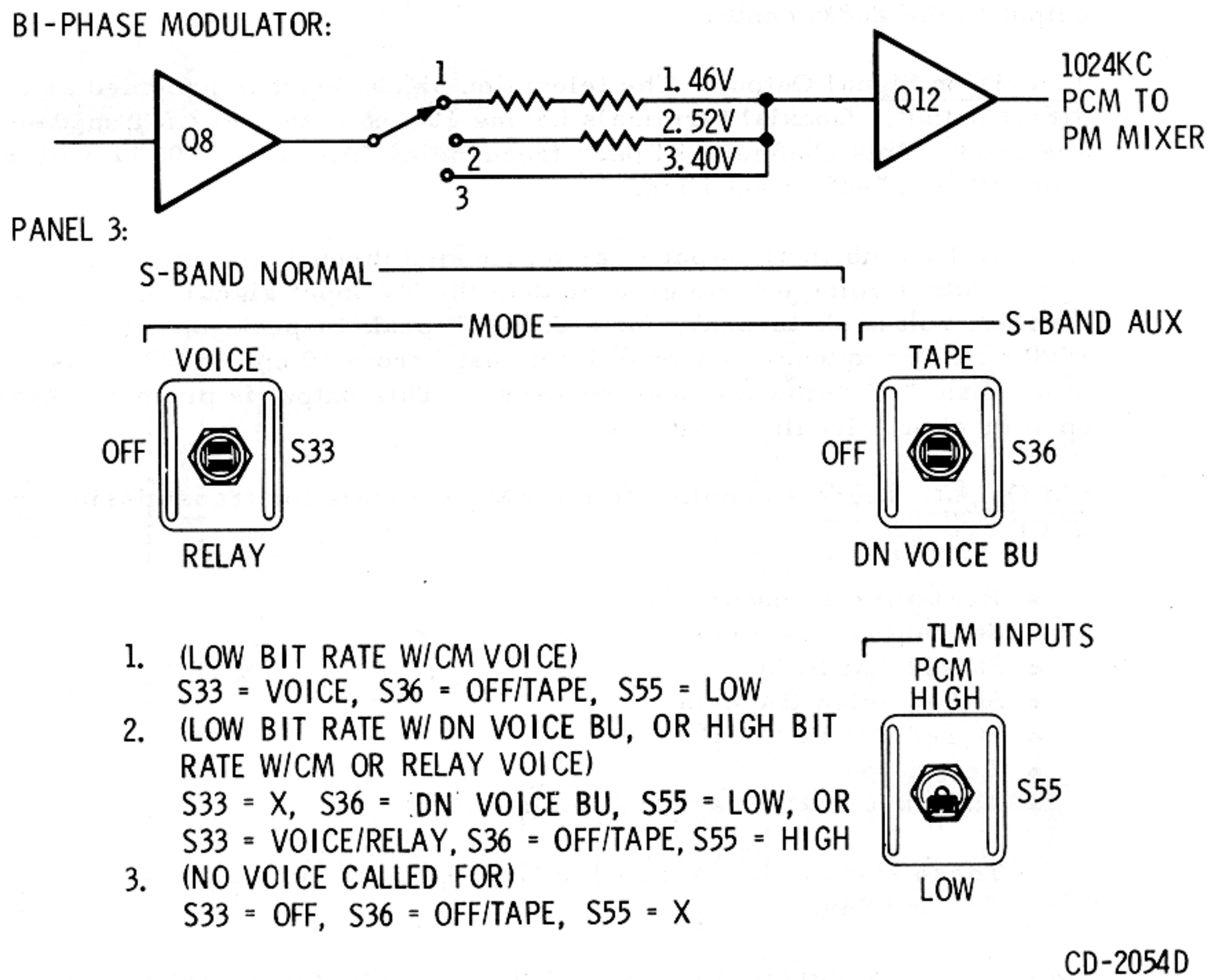

Figure 2.8-23. PMP Data Modulation Levels

When S37 is in the SCI position, the three R/T scientific analog data signals are applied directly to the FM mixer in the PMP for transmission via the S-band FM transmitter.

Intercom/LM Voice Output to DSE. The intercom and LM voice output is supplied for DSE recording at all times power is applied to the PMP.

Up-Voice and Up-Data Output. When switch S38 is in the DATA position, the up-voice signal from the 30-kc demodulator is supplied as an output to the audio center. The 70-kc demodulator supplies an up-data output to the up-data link decoder.

When switch S38 is placed in the BU VOICE position, the 70-kc demodulator output is switched to the up-voice output terminals, as an output to the audio center.

Television Signal Output. The television signal input is provided as a direct output. Coaxial terminals having 100-ohm ±5 percent impedance are used. This channel will pass frequencies from dc to 500 kc with no more than 0.5-db attenuation.

A TV umbilical output is also provided through an isolation amplifier. Output voltage is no greater than the TV input signal and is no less than one volt peak-to-peak, for a 1.9-volt peak-to-peak input signal at 1000 cps. Frequency response in the band from 10 cps to 500 kc is no more than 3 db below the peak response. This output is protected against open or short circuit conditions.

FM Output. Signals supplied to the FM terminals for transmission on USBE are:

- Real-time scientific data
- Stored CM LM voice
- Stored LM PCM
- Stored scientific data
- Stored CM PCM data
- Television
- Auxiliary real-time CM PCM data.

These signals are selected by appropriate combinations of switches S36, S37, and S49.

PM Output. Subcarriers are selected by suitable configurations of switches. Subcarriers selected for phase modulation of the USBE are:

- 1.024-mc biphase modulated by real-time CM PCM data
- 1.25-mc VCO frequency modulated by:

  CM voice, or
  CM voice and LM/EVA voice and biomedical data

- 512-kc emergency key signal.

These signals are selected by appropriate combinations of switches S33, S34, S36, and S44. Switch positions and the output level of each subcarrier are shown on figure 2.8-23.

The overall functions of the PMP are summarized in figure 2.8-24.

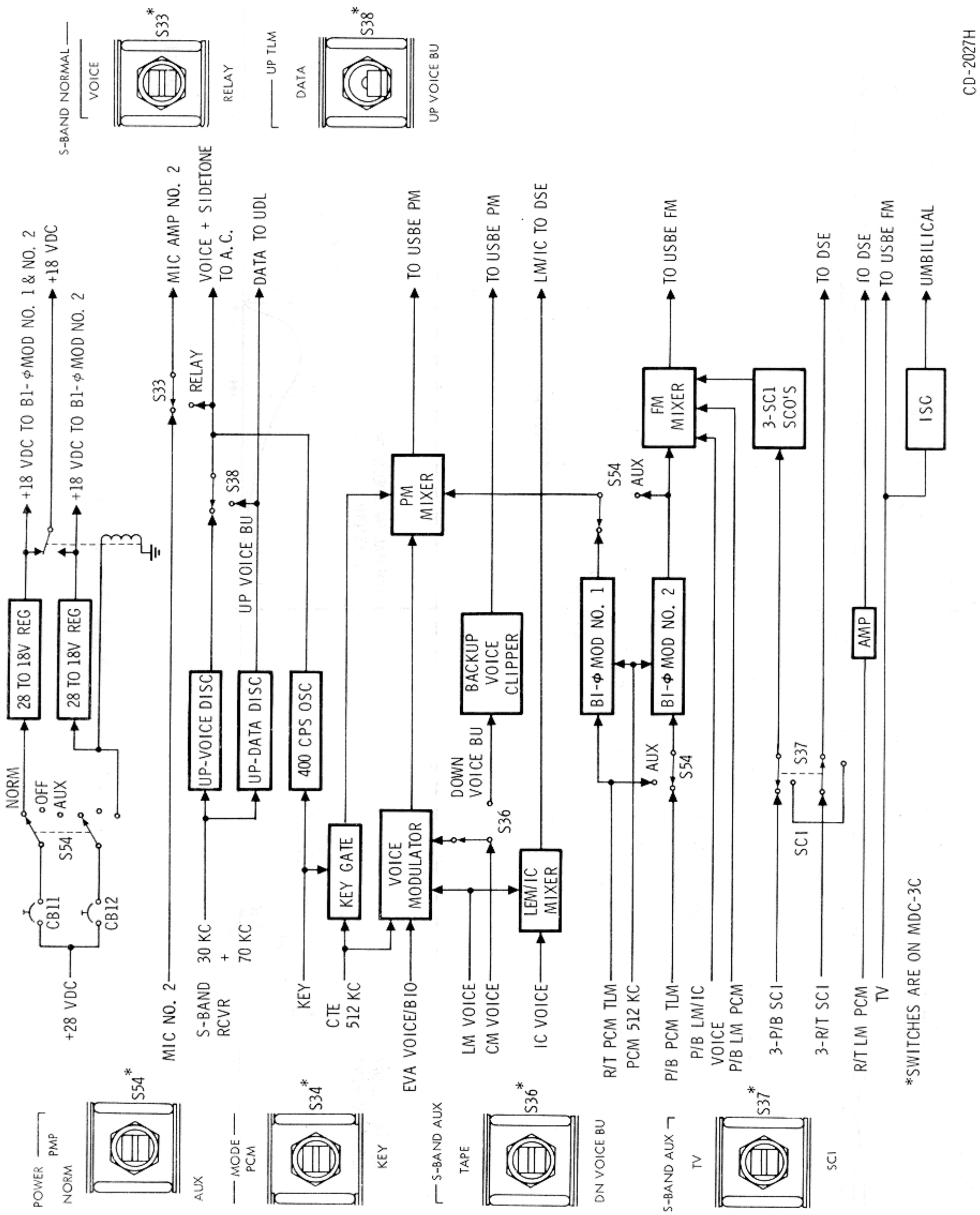

Figure 2.8-24. PMP Block Diagram

T/C

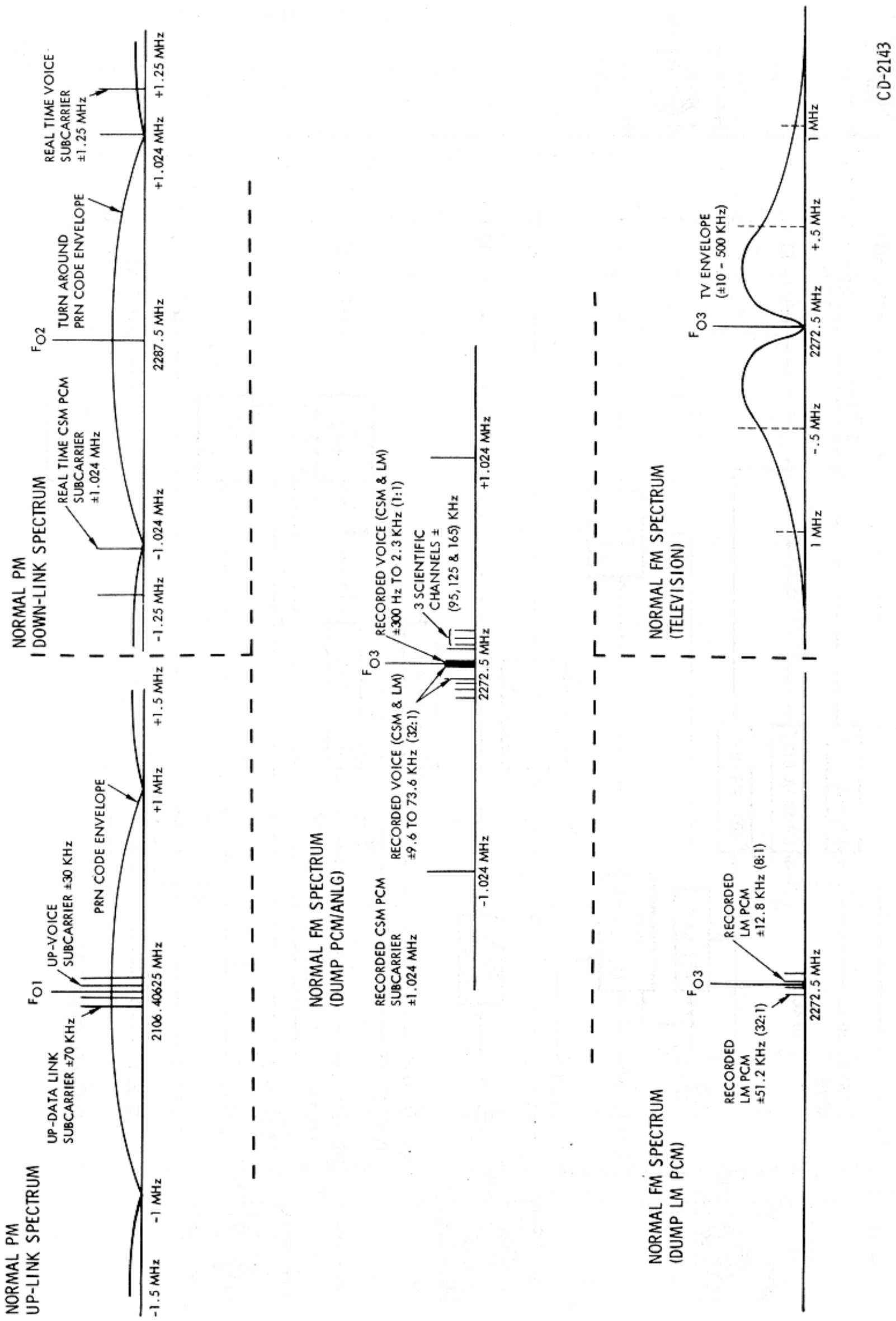

Figure 2.8-25. S-Band Operational Spectrums

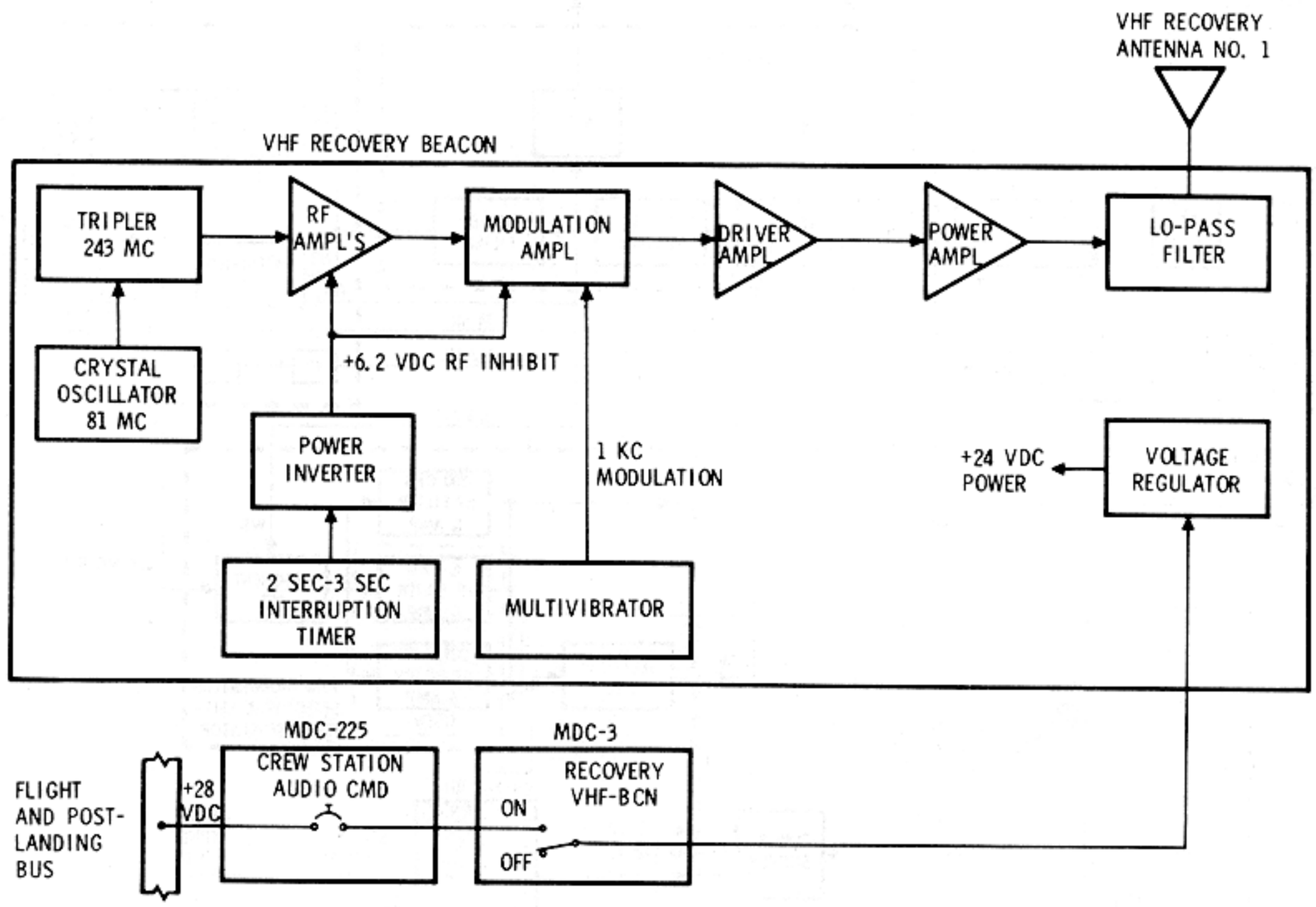

Figure 2.8-26. VHF Recovery Beacon Equipment

T/C

2.8.3.4.6 VHF Recovery Beacon Equipment.

The VHF recovery beacon equipment (figure 2.8-26) provides line-of-sight direction-finding capabilities to aid in locating the SC during the recovery phase of the mission. The 3-watt beacon signal emitted is an interrupted 243-mc carrier, modulated by a 1000-cps square wave. The signal is transmitted for 2 seconds, then interrupted for 3 seconds.

Manual control of the equipment is provided by the RECOVERY—VHF-BCN, two-position ON/OFF switch on MDC-3. The beacon requires a maximum of 10-watt of 28-vdc power.

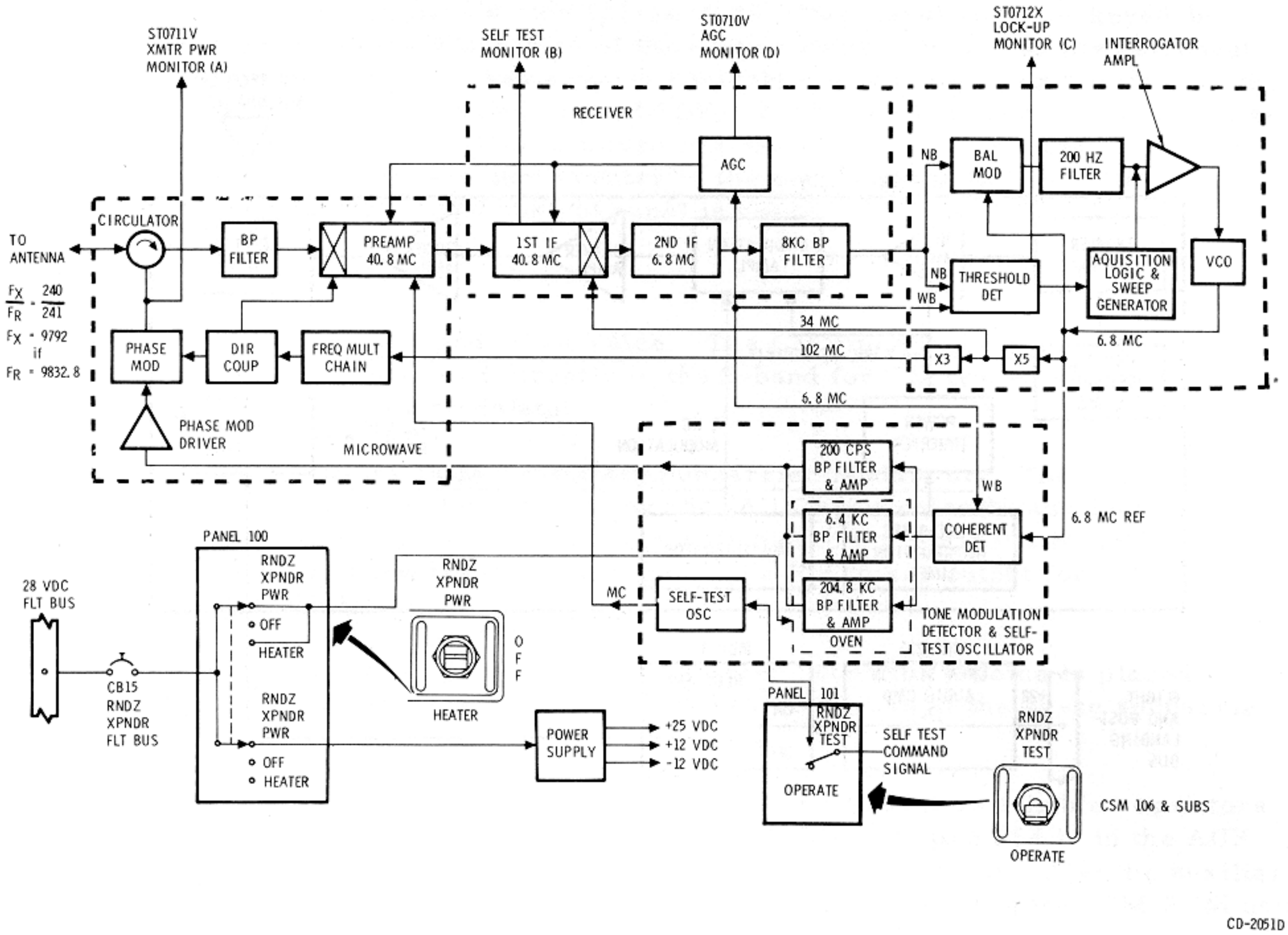

Figure 2.8-27. RRT Block Diagram

The output of the VHF recovery beacon equipment is fed to VHF recovery antenna No. 1, which is deployed automatically when the main chutes are deployed.

2.8.3.4.7 Rendezvous Radar Transponder.

The transponder (figure 2.8-27) is located in the command and service module (CSM) and performs the function of receiving the LM rendezvous radar (RR) X-band CW signal, and retransmitting (back to the LM) a phase-coherent signal.

The 240-milliwatt return signal is offset in fundamental carrier frequency from the received signals and contains the same modulation components phase-related with respect to the received signal.

The transponder is a part of the LM radar subsystem which consists of a rendezvous radar in the LM, the transponder in the CSM, and a landing radar mounted in the descent stage of the LM. The landing radar and the descent stage are left on the lunar surface when the lunar exploration is completed.

During the descent to the lunar surface, the LM and CSM maintain continuous radar contact through the rendezvous radar-transponder link. During the latter part of the descent phase, the landing radar measures the altitude and velocity of the LM with respect to the lunar surface.

At the end of the lunar stay, the rendezvous radar in the LM is used to track the transponder in the orbiting CSM to obtain orbital parameters, which are used to calculate the launching of the LM into a rendezvous trajectory.

In the rendezvous phase, the LM and CSM again maintain radar contact to obtain information needed for midcourse correction, rendezvous, and docking operations. By accepting the weak rendezvous radar transmitted signal, as discussed in preceding paragraphs, and by retransmitting (back to the LM) the phase-coherent return signal, the range capabilities are greatly increased.

Performance Characteristic.

Range. Operates with the rendezvous radar (RR) in a closed loop tracking system at LOS range between 50 feet and 400 NM.

Range Accuracy. The transponder will retransmit each of the range tones received from the rendezvous radar at the following maximum phase shifts:

Tone Frequency	Max. Deg. Phase Shift
200 cps	±0.69°
6.4 kcs	±1.0°
204.8 kcs	±3°

Range Rate Accuracy. 1/4 percent or 1 foot per second (whichever is greater) based on an LGC sampling period of 100 milliseconds.

Angular Coverage. Angular coverage over a solid angle of 160° by 105°.

Acquisition. Acquires the rendezvous radar with a detection probability of 98 percent in a period of 1.3 seconds with a signal equal to or greater than -123 dbm at the transponder antenna.

T/C

Mode Activation.

Signal Search Mode. The transponder will be in the signal search mode at all times that the transponder is in an ON condition and no signal is being received from the rendezvous radar.

Transponder Mode. The transponder will be in its transponder mode at all times that a signal is being received from the rendezvous radar. Signals equal to or greater than -123 dbm which fall within the transponder frequency range are automatically detected and acquired by the transponder.

Self-Test Mode. The transponder will be in the self-test mode when the self-test enable signal is applied to the transponder assembly.

Standby Mode. The transponder will be in standby mode when the heater position is selected for the 24 minutes it takes to warm the filters to 160°±1°F.

Antenna Characteristics.

Coverage. Gain is maintained over a solid angle of 160° x 105°.

Polarization. Linear with cross-polarized components 20 db down from the main component.

Transmit Energy Characteristics.

Power. Greater than 240 milliwatts.

Frequencies. Signal search, 9792.0 mc ±25 kcs and swept ±104 kc minimum.

Transponder mode equal to the received frequency times 240/241.

Received Signal Characteristics.

Frequency. 9832.8 mc ±30 kc offset by a doppler frequency within the range of ±49 kc with maximum rate of change of 500 cps^2.

Signal Level. At antenna terminals, -123 dbm to -18 dbm.

Self Test.

Self-Test Oscillator. Provides 40.8 mc for receiver testing and is coupled into the receiver preamplifier.

Self-Test Enable. From control/display +12 vdc ±10 percent and current of 20 ma ±10 percent.

Self-Test Enable Supply. From transponder to the control/display assembly self-test switch +25 volts ±10 percent.

Receiver Self-Test Output. From transponder to the control/display monitor meter, panel 101.

Monitor outputs to the control/display panel:

AGC monitor	0 to 4.5 volts
Frequency lockup search	0±0.4 volts dc
Transponder mode	4.5 volts dc ±10 percent

Transmitter Power. 2.5±0.4 volts dc for specified minimum power (5 volts dc maximum).

Electrical Requirements.

Operating voltage	Normal 25 to 31.5 volts
Emergency periods not exceeding 5 seconds	+20 to +25 volts dc +31.5 to +32 volts dc
Transients limits not exceeding 5 minutes	+50 volts for 10 usec at 10 pps repetition rate. -100 volts for 10 usec at 10 pps repetition rate.

Power Requirements.

Maximum input power excluding heater	60 watts at +28 vdc

2.8.3.5 Antenna Equipment Group.

The antenna equipment group contains all the SC antennas and ancillary equipment used in the T/C system. For the antenna locations, see figure 2.8-28.

2.8.3.5.1 VHF Omniantenna Equipment.

The VHF omniantennas and ancillary equipment consist of two VHF scimitar antennas, a VHF triplexer, a VHF antenna switch, and the necessary signal and control circuits. The function of this equipment is to provide capabilities for radiation and pickup of RF signals in the VHF

T/C

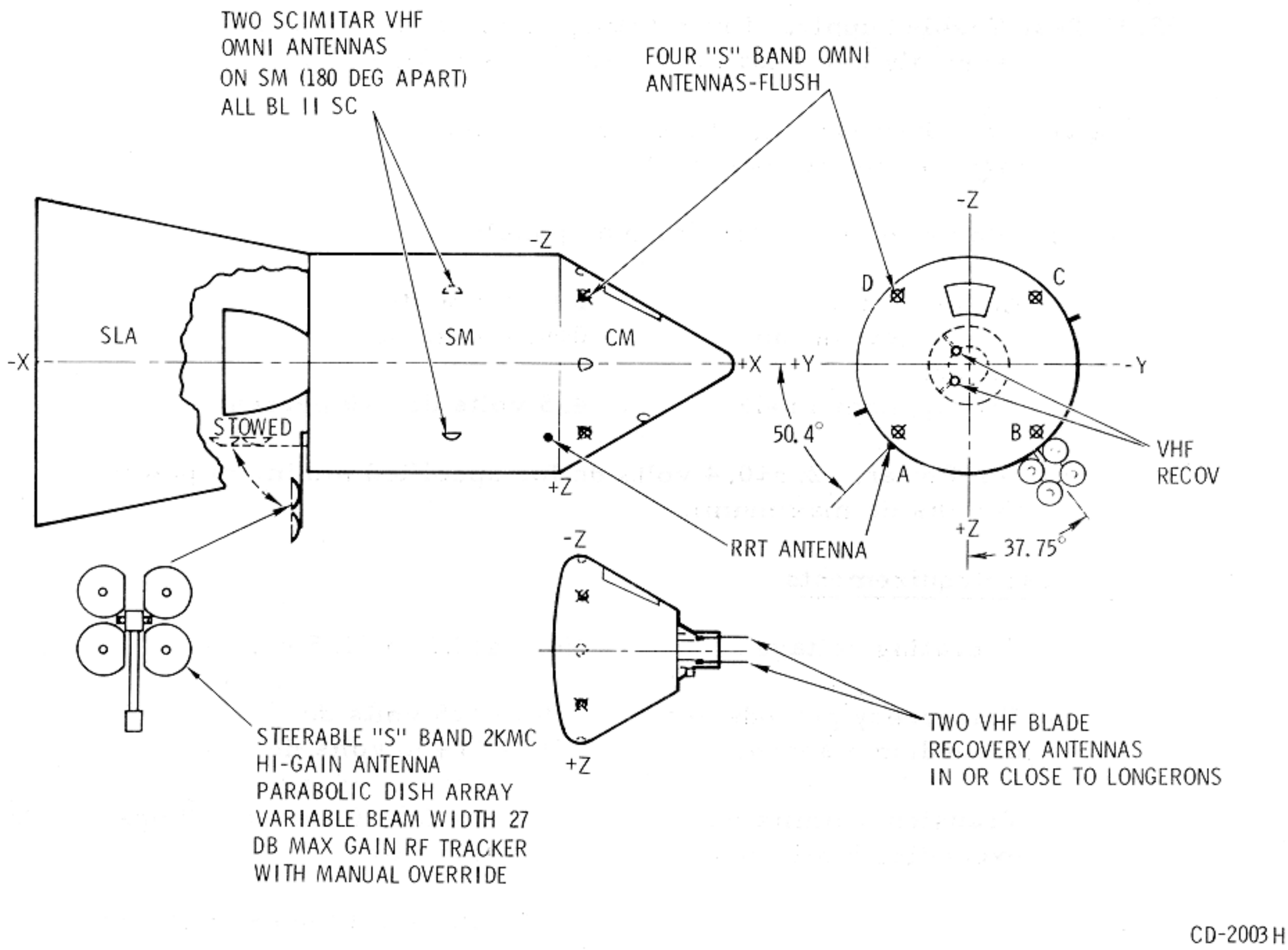

Figure 2.8-28. Antenna Locations

spectrum. The VHF/AM transceivers, which work through this equipment, operate at 296.8 mc and 259.7 mc. Provisions are also made for the checkout of the PLSS communication equipment through this equipment.

The VHF triplexer is a passive, three-channel filtering device which enables three items of VHF transmitting and receiving equipment to utilize one VHF antenna simultaneously. The three-channel filters are composed of two tuned cavities each, which function as bandpass filters. No power is required by the device and there are no external controls.

The VHF scimitar antennas, shown in figure 2.8-29, are omni-antennas with approximately hemispherical radiation patterns. Because of its characteristic shape, this type of VHF antenna is called a scimitar.

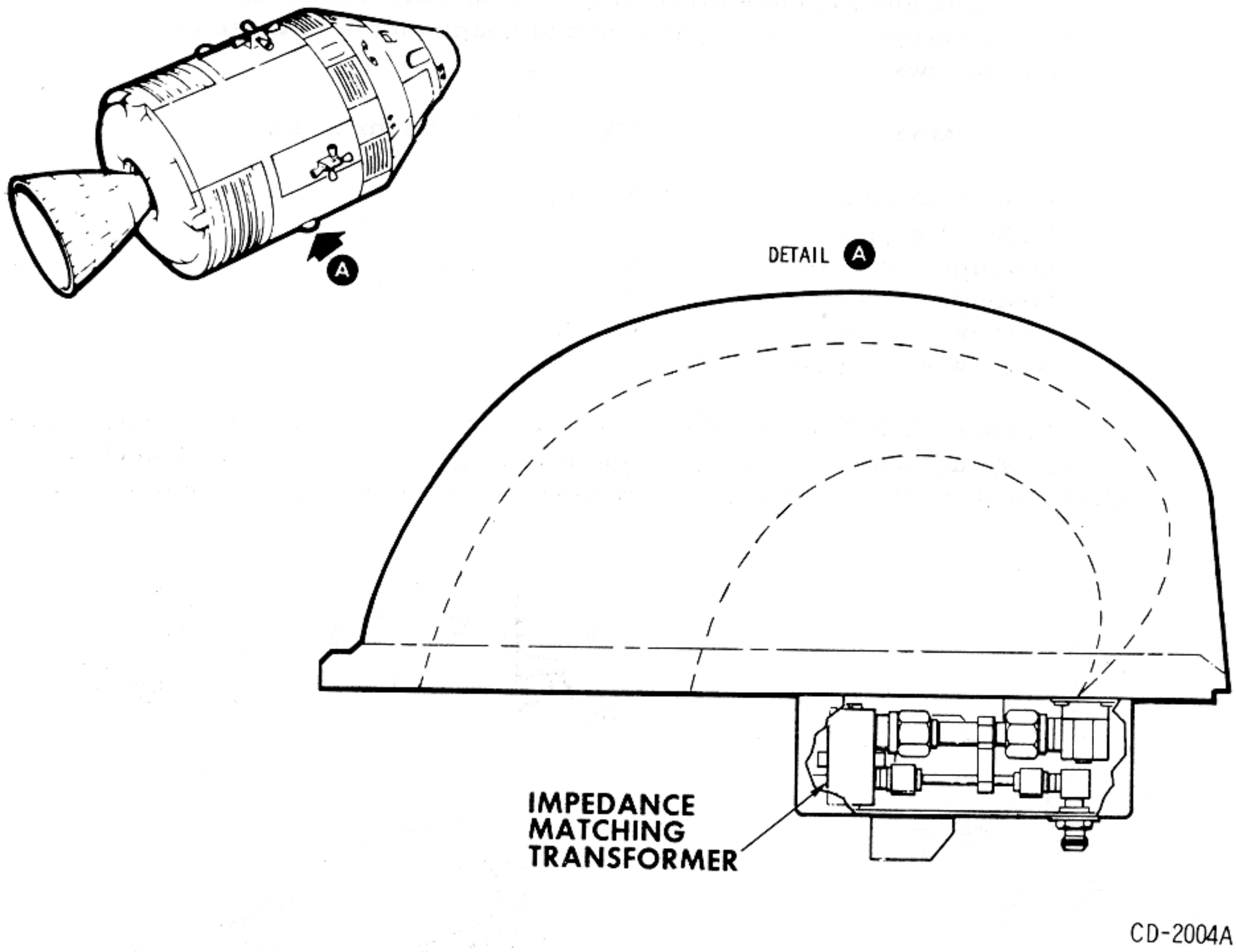

Figure 2.8-29. Scimitar Antenna

These two VHF antennas are located on opposite sides of the service module. One is located near the +Y axis and is called the right VHF antenna; the other is located near the -Y axis and is called the left VHF antenna. Because of their approximate hemispherical radiation patterns, full omnidirectional capabilities can be obtained only by switching from one antenna to the other. This is accomplished with the VHF ANTENNA remote control switch on MDC-3 for VHF communications.

2.8.3.5.2 S-Band High-Gain Antenna.

The high-gain antenna is provided for use with the unified S-band equipment to provide sufficient gain for two-way communications at lunar distances. To accomplish this, the antenna can be oriented manually or automatically toward the MSFN stations for maximum operational efficiency.

The antenna also has three modes of operation for transmission and two for reception. The nominal gain and beam widths of these modes are listed as follows:

Mode	Gain	Beam Width
Wide-Transmit	9.2 db	40°
Wide - Receive	3.8 db	40°
Medium - Transmit	20.7 db	11.3°
Medium - Receive	22.8 db	4.5°
Narrow - Transmit	26.7 db	3.9°
Narrow - Receive	23.3 db	4.5°

Figure 2.8-30 shows the antenna in both the deployed and nondeployed state. Actual deployment takes place during transposition and docking phase of the mission when the SLA panels are opened. After deployment,

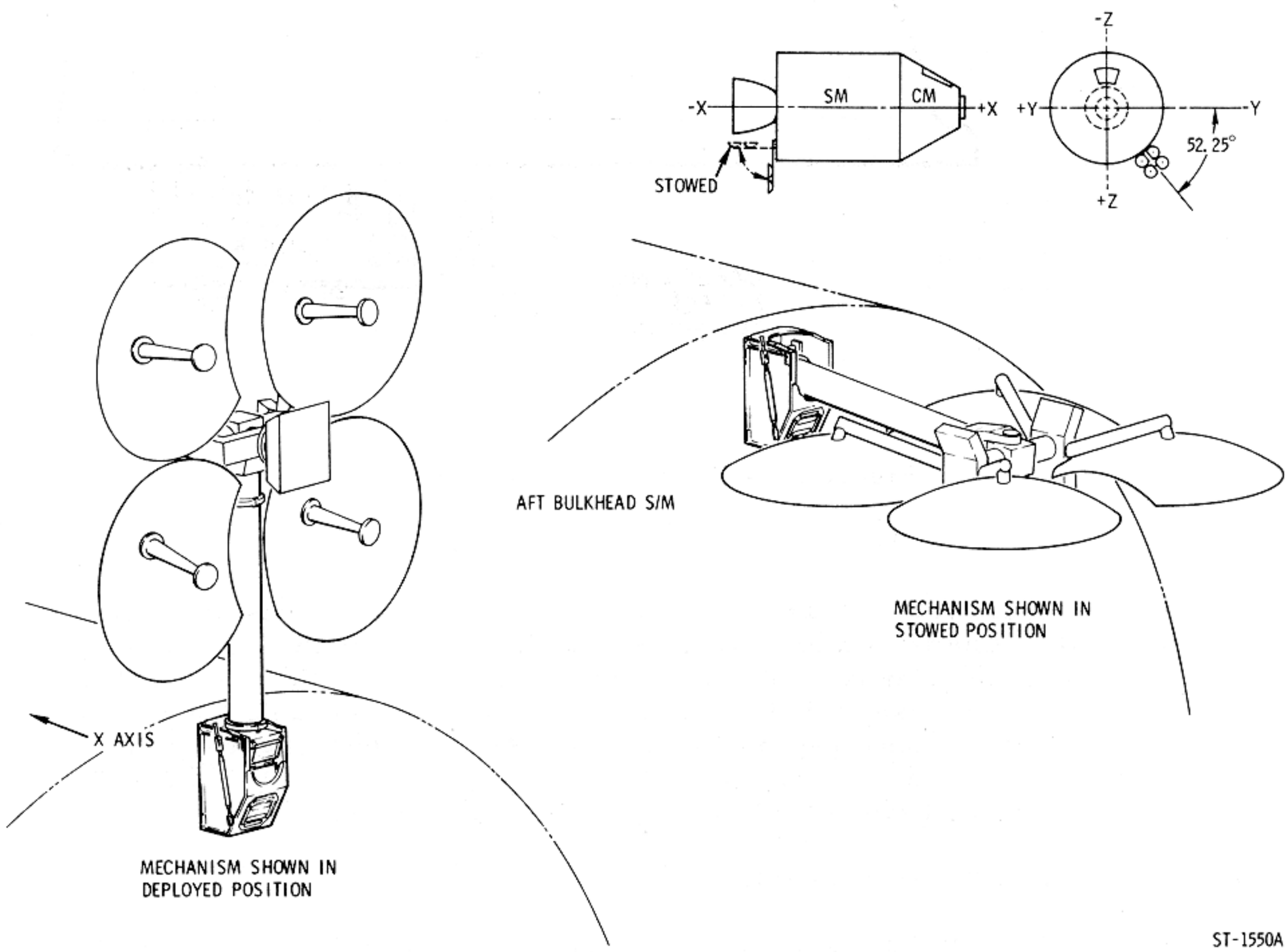

Figure 2.8-30. High Gain Antenna

the positioning circuitry is enabled. Manual controls, position readouts, and a signal strength meter are provided on MDC-2 to allow normal positioning of the antenna for initial signal acquisition. After acquisition, the antenna is capable of automatically tracking the RF signal within the travel limits of its gimbaling system. The propagation and reception mode is selectable on the same panel.

The antenna itself is made up of a four-parabolic dish array whose attendant feed horns are offset 10 degrees for the desired propagation pattern and a cluster of four feed horns enclosed in the center enclosure. In the wide mode, the center feed horns are used for transmission and reception of signals. In the medium mode, one of the parabolic dish-reflector antennas is used for transmission and all four of the dish antennas are used for reception of S-band signals. The narrow mode employs the four parabolic dish antennas for transmission and reception of S-band signals.

2.8.3.5.3 S-Band Omniantennas.

The function of the four S-band omniantennas is to transmit and receive all S-band signals during the near-earth operational phase, with a backup capability to support the high-gain S-band antenna in the lunar sequence. Locations are shown in figure 2.8-28 at X_c = 20.766 and 45 degrees off the +Z, -Y, -Z and +Y axis.

The antennas are flush-mounted, right-hand polarized helical, and in a loaded cavity. They are rated at 15 watts cw at 2100 to 2300 mc.

2.8.3.5.4 VHF Recovery Antenna Equipment.

T/C

There are two VHF recovery antennas, No. 1 and No. 2, stowed in the forward compartment of the SC. Each antenna consists of a quarter-wave stub, 11 inches long, and a ground plane. They are automatically deployed 8 seconds after main parachute deployment, during the descent phase of the mission. (See figures 2.8-31 and 2.8-32.)

VHF recovery antenna No. 1 is connected to the VHF recovery beacon equipment. VHF recovery antenna No. 2 is to be used with the VHF/AM transmitter-receiver equipment and is connected to the VHF antenna switch with a coaxial cable. An access hatch is provided to allow either of the VHF recovery antennas to be used with the GFE survival transceiver. This requires that the coaxial cable from one of the antennas be manually disconnected at the triplexer and reconnected to the survival transceiver.

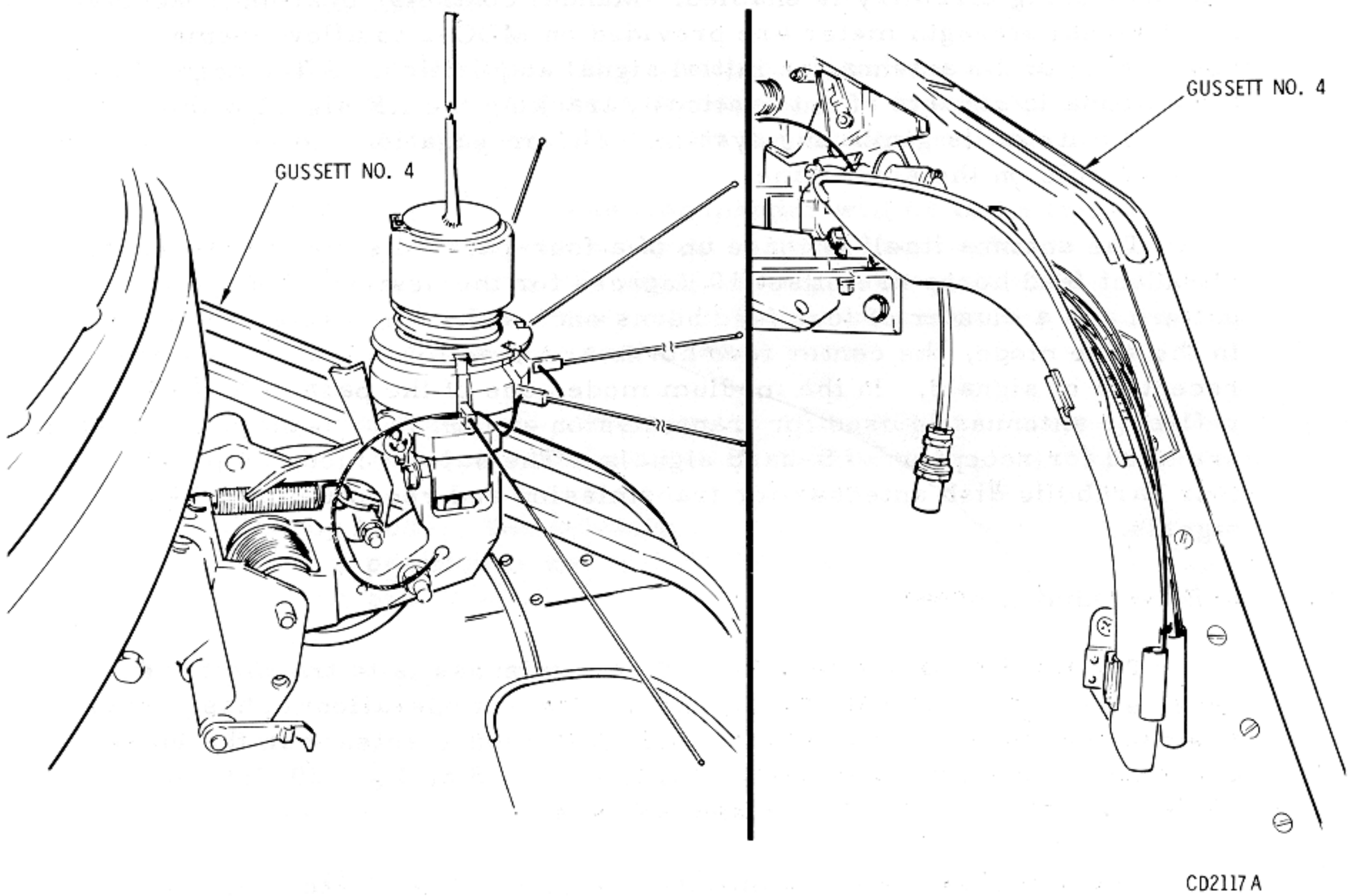

Figure 2.8-31. VHF Recovery Antenna No. 1

2.8.3.6 Electrical Power Distribution.

Electrical power distribution for the intercommunication, data, instrumentation, RF and antenna equipment is summarized on figure 2.8-33. In most cases, the power circuit for each piece of equipment was covered in the respective functional description. The majority of the circuit breakers for the telecommunication system are located on MDC-225.

2.8.4 OPERATIONAL LIMITATIONS AND RESTRICTIONS.

2.8.4.1 VHF-AM.

a. Simultaneous selection of DUPLEX A and B gives the same operation as selection of SIMPLEX A and B.

b. Only LM PCM telemetering data can be received only on RCV B DATA.

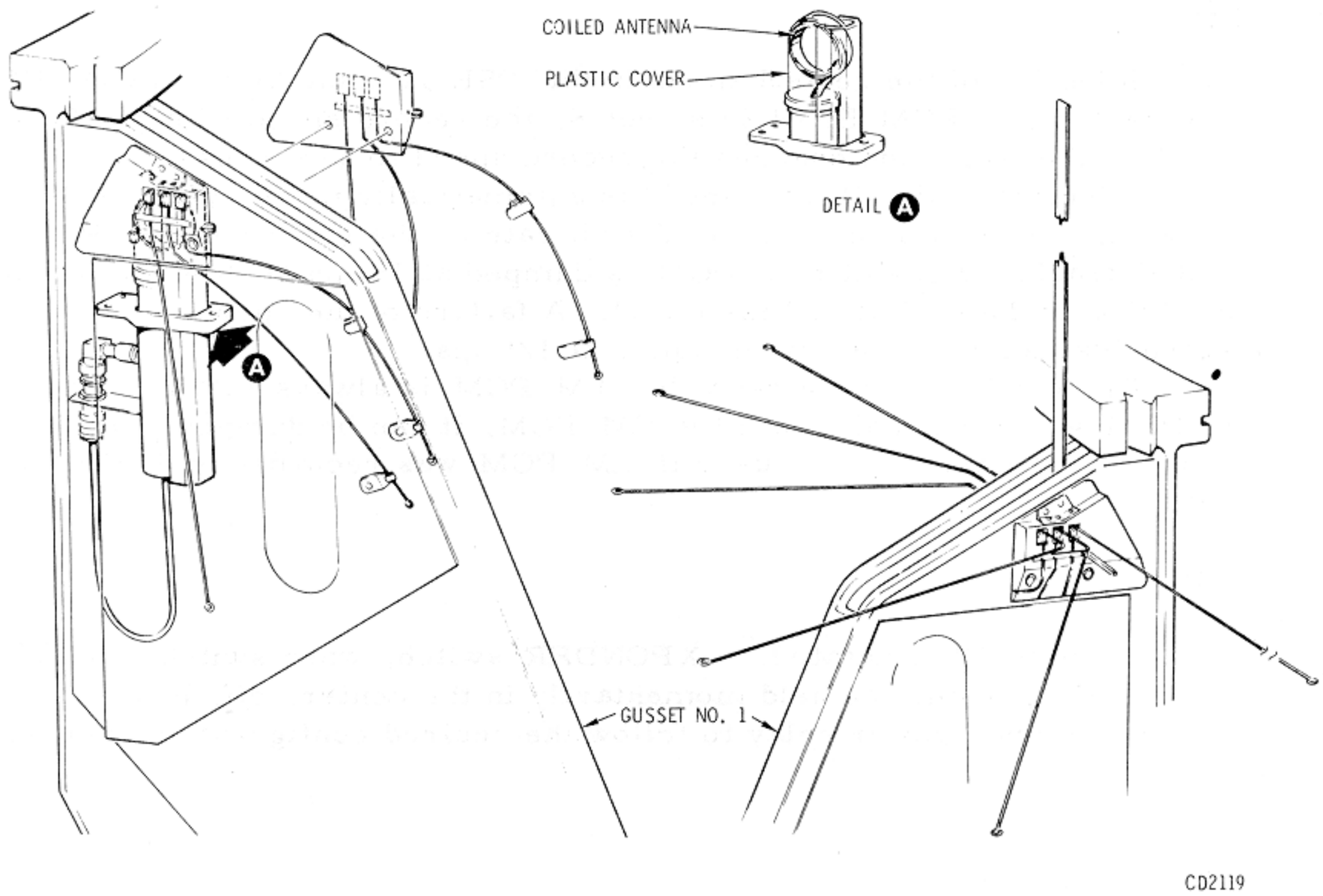

Figure 2.8-32. VHF Recovery Antenna No. 2

T/C

2.8.4.2 PMP.

a. When UP TLM/VOICE BU is chosen, the output of the data discriminator is sent to both the audio center and the up-data link equipment.

b. Low-bit rate PCM data can be transmitted with down VOICE BU. If only VOICE transmission is desired, the PCM switch must be at OFF and the TLM INPUT PCM switch must be at HIGH for the best circuit margins.

c. Selection of the AUX PMP power supply precludes the transmission of recorded data from the data storage equipment. Real-time PCM is available for transmission over both the S-band transponder and FM transmitter in this mode.

d. To transmit real-time PCM over the FM transmitter, S-BAND AUX TAPE and PMP AUX POWER should be selected.

2.8.4.3 DSE.

a. Selection of the record speed in the DSE is made by the PCM HIGH-LOW switch. If PCM HIGH is selected, the record speed with be 15 ips. A PCM LOW selection changes the record speed to 3-3/4 ips.

b. Selection of the DUMP speed is automatically made by the DSE electronics through monitoring of the bit rate on the recorded CM PCM CLOCK track. High-bit rate PCM is dumped at 15 ips (1:1) while low-bit rate PCM is dumped at 120 ips (32:1). A failure of the speed select electronics causes automatic dumping at 120 ips.

c. The DUMP speed of recorded LM PCM is always 120 ips. If the LM PCM was recorded with LBR CM PCM, it can be dumped at a 32:1 ratio. An 8:1 dump ratio is used if LM PCM was recorded with HBR CM PCM.

2.8.4.4 USBE.

The S-BAND NORMAL - XPONDER switch, when switched between PRI and SEC, should be held momentarily in the center, off, position to allow the internal power relay to follow the desired configuration change.

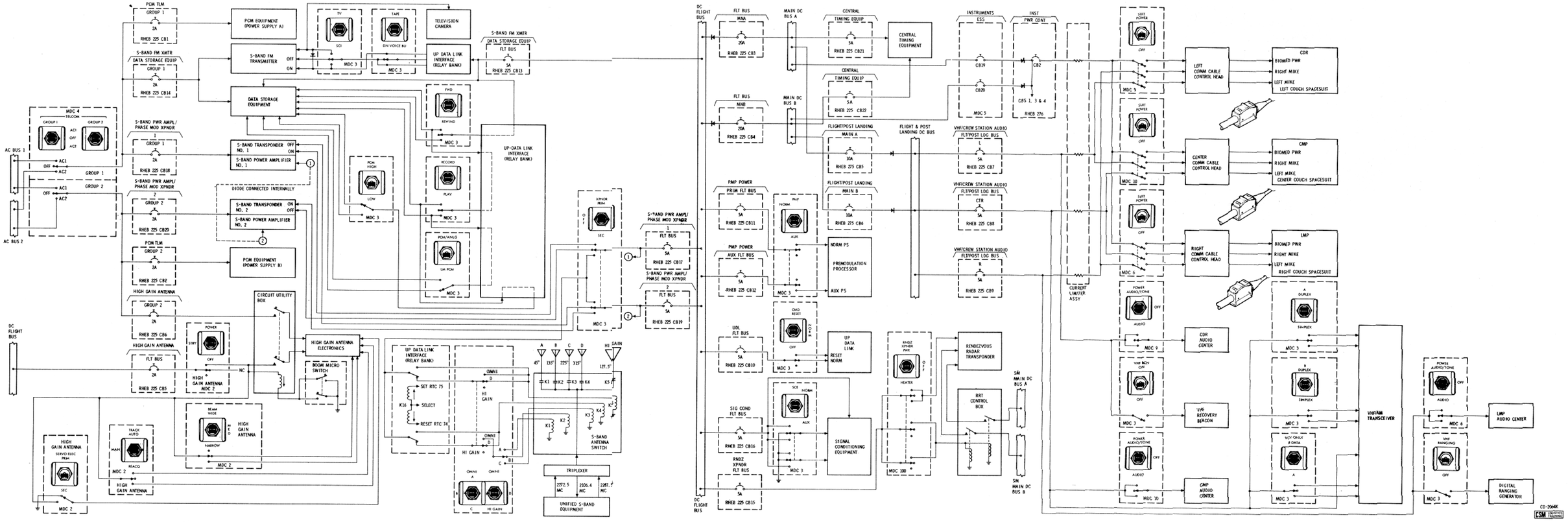

Figure 2.8-33. Telecommunications Power Distribution

T/C

SECTION 2

SUBSECTION 2.9

SEQUENTIAL SYSTEMS

2.9.1 INTRODUCTION.

Sequential systems include certain detection and control subsystems of the launch vehicle (LV) and the Apollo spacecraft (SC). They are utilized during launch preparations, ascent, and entry portions of a mission, preorbital aborts, early mission terminations, docking maneuvers, and SC separation sequences. Requirements of the sequential systems are achieved by integrating several subsystems. Figure 2.9-1 illustrates the sequential events control subsystem (SECS) which is the nucleus of sequential systems and its interface with the following subsystems and structures:

- Displays and controls
- Emergency detection (EDS)
- Electrical power (EPS)
- Stabilization and control (SCS)
- Reaction control (RCS)
- Docking (DS)
- Telecommunications (T/C)
- Earth landing (ELS)
- Launch escape (LES)
- Structural

2.9.1.1 Sequential Events Control Subsystem.

The SECS is an integrated subsystem consisting of twelve controllers which may be categorized in seven classifications listed as follows:

- Two master events sequence controllers (MESC)
- Two service module jettison controllers (SMJC)
- One reaction control system controller (RCSC)
- Two lunar module (LM) separation sequence controllers (LSSC)
- Two lunar docking events controllers (LDEC)
- Two earth landing sequence controllers (ELSC)
- One pyro continuity verification box (PCVB)

The relationship of these controllers and their sources of electrical power are illustrated in figure 2.9-2. Five batteries and three fuel cells are the source of electrical power. The SMJC is powered by fuel cells; however, battery power is used for the start signal. The RCSC is powered by the fuel cells and batteries. The remaining controllers of the SECS are powered by batteries exclusively.

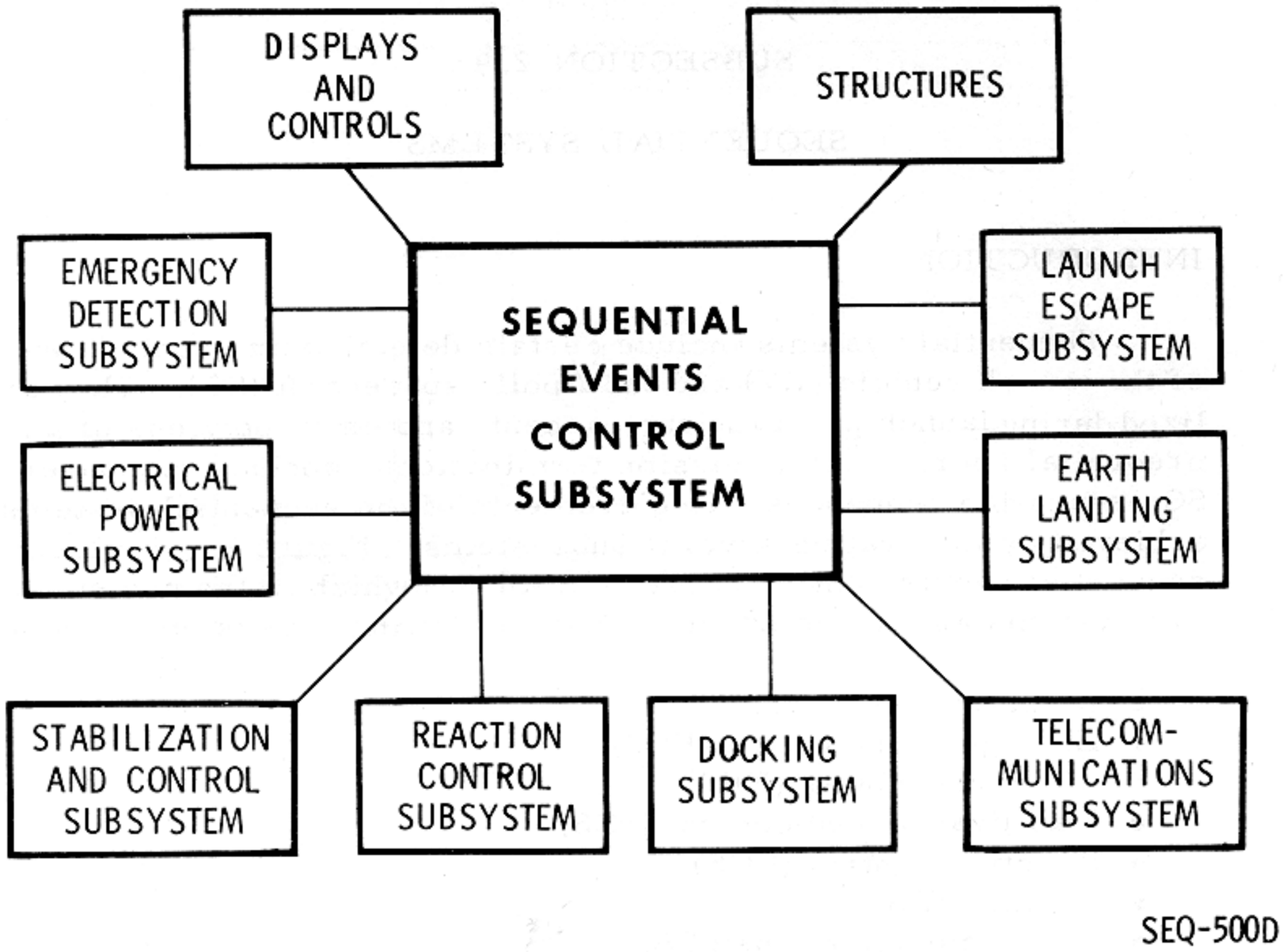

Figure 2.9-1. SECS Interface

2.9.1.2 MESC, ELSC, LDEC, and PCVB Locations.

Four controllers of the SECS are located in the right-hand equipment bay (RHEB) of the CM. (See figure 2.9-3.)

2.9.1.3 SMJC Location.

Installation of the redundant controllers on the forward bulkhead of the SM in sector 2 is illustrated in figure 2.9-4. The fuel cells, which supply power for the SMJC, are also located in the SM.

2.9.1.4 RCSC Location.

The location of the RCSC in the aft equipment bay of the CM is illustrated in figure 2.9-5.

2.9.1.5 LSSC Location.

Redundant controllers are located in the spacecraft LM adapter (SLA) just forward of the LV instrumentation unit (IU); this location is

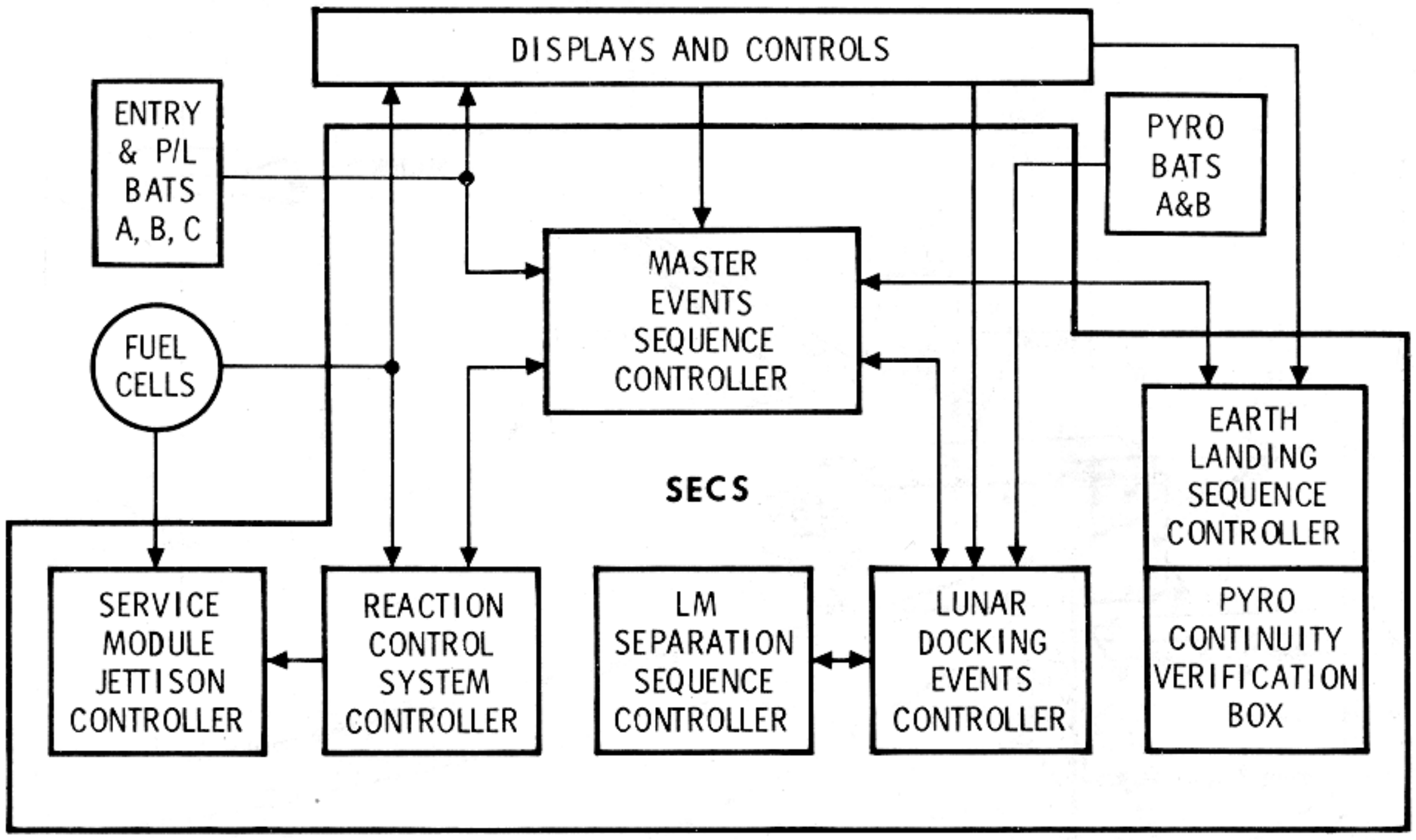

Figure 2.9-2. SECS Controllers

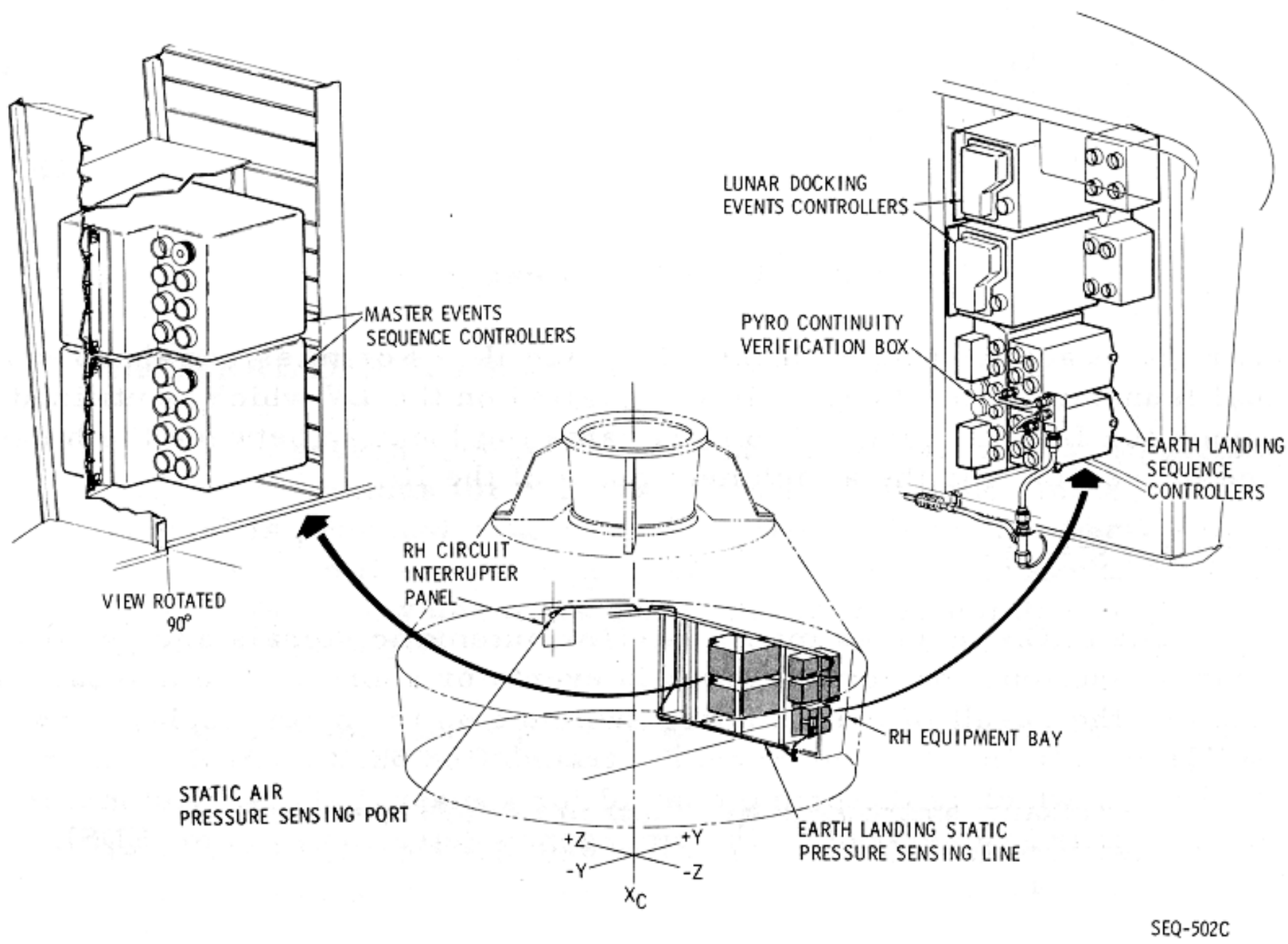

Figure 2.9-3. MESC, ELSC, LDEC, and PCVB Locations

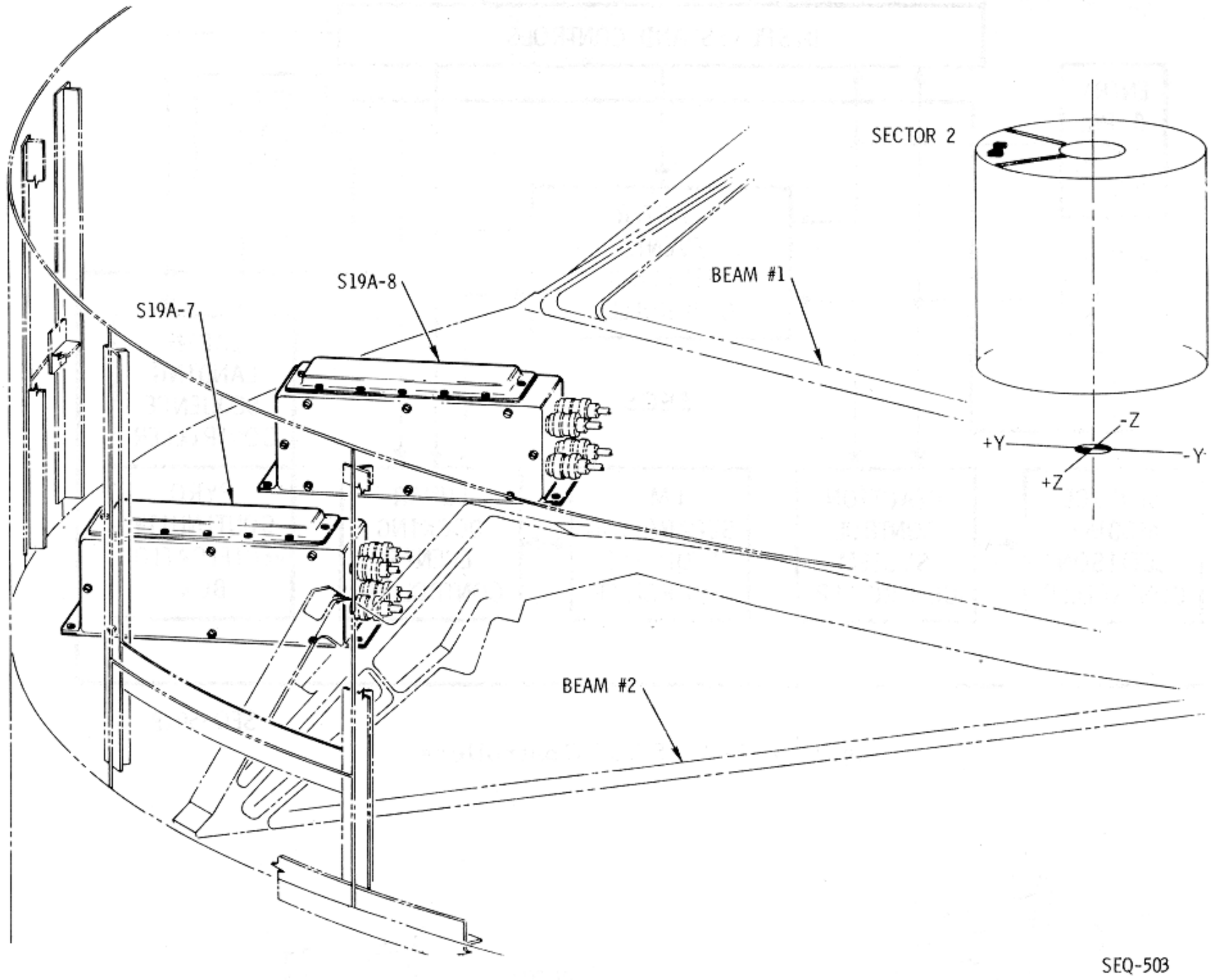

Figure 2.9-4. SMJC Location

near the attachment point of the LM to the IU. For missions that require dual launchings, the LSSC will be installed on the LV which is utilized to launch the LM. Figure 2.9-6 illustrates the location between the hinge line of the SLA and the attachment plane of the IU.

2.9.1.6 Origin of Signals.

The SECS receives manual and/or automatic signals and performs control functions for normal mission events or aborts. The manual signals are the result of manipulating switches on the main display console (MDC) or rotating the Commander's translation hand control counterclockwise, which is the prime control for a manual abort. Automatic abort signals are relayed by the emergency detection system (EDS).

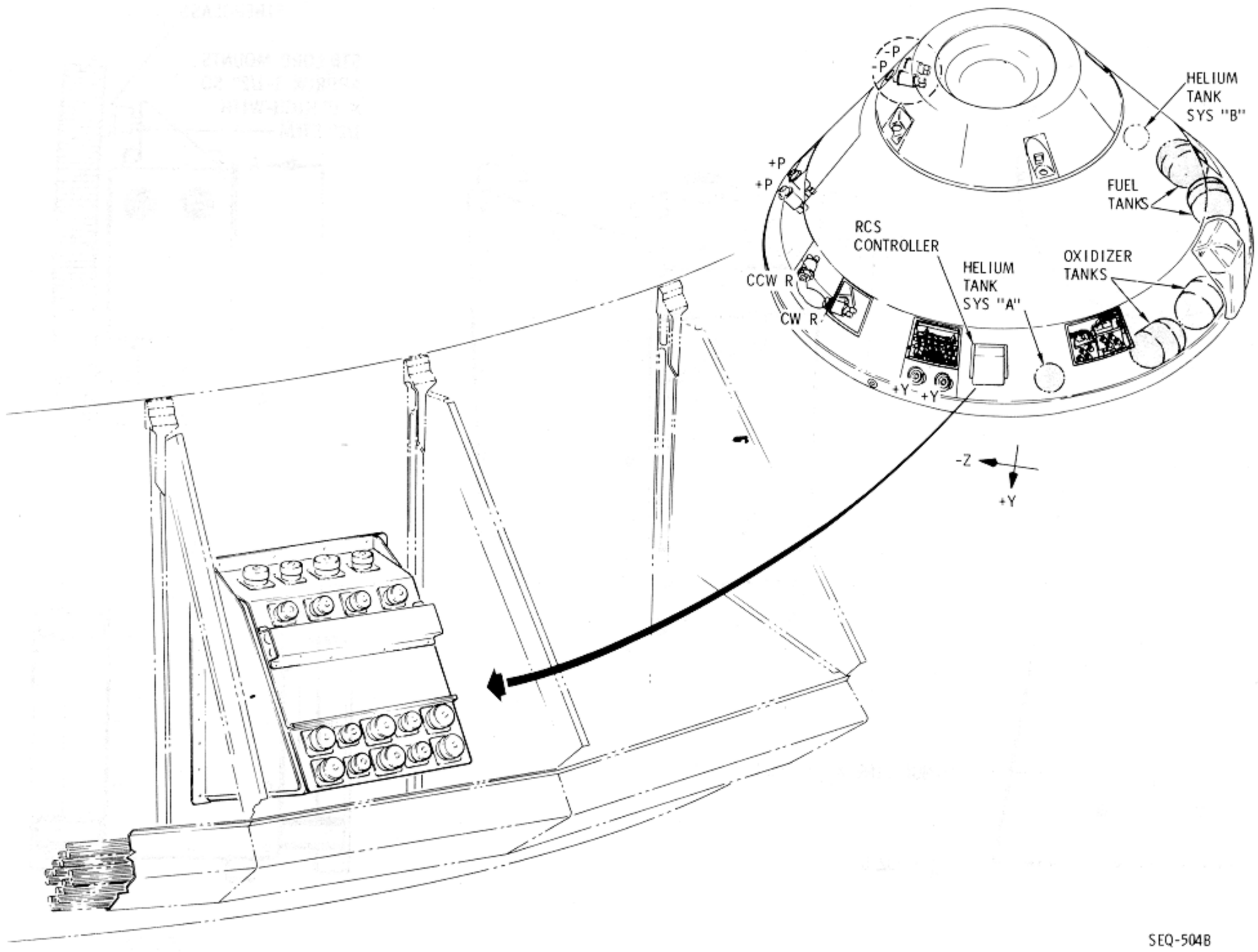

Figure 2.9-5. RCSC Location

SEQ

2.9.2 GENERAL DESCRIPTION.

In several instances, normal mission events are initiated manually with no provisions for automatic control. In other instances, automatic control is provided with manual control included for backup or override. In addition to the control functions, the sequential systems incorporate visual displays which allow the flight crew to monitor parameters associated with the LV.

2.9.2.1 Launch Escape Tower Assembly.

The apex section of the boost protective cover (BPC) (figure 2.9-7) is attached to the LET legs and also to another section of the BPC which is described in Section 1, Spacecraft. The LET is fabricated from welded

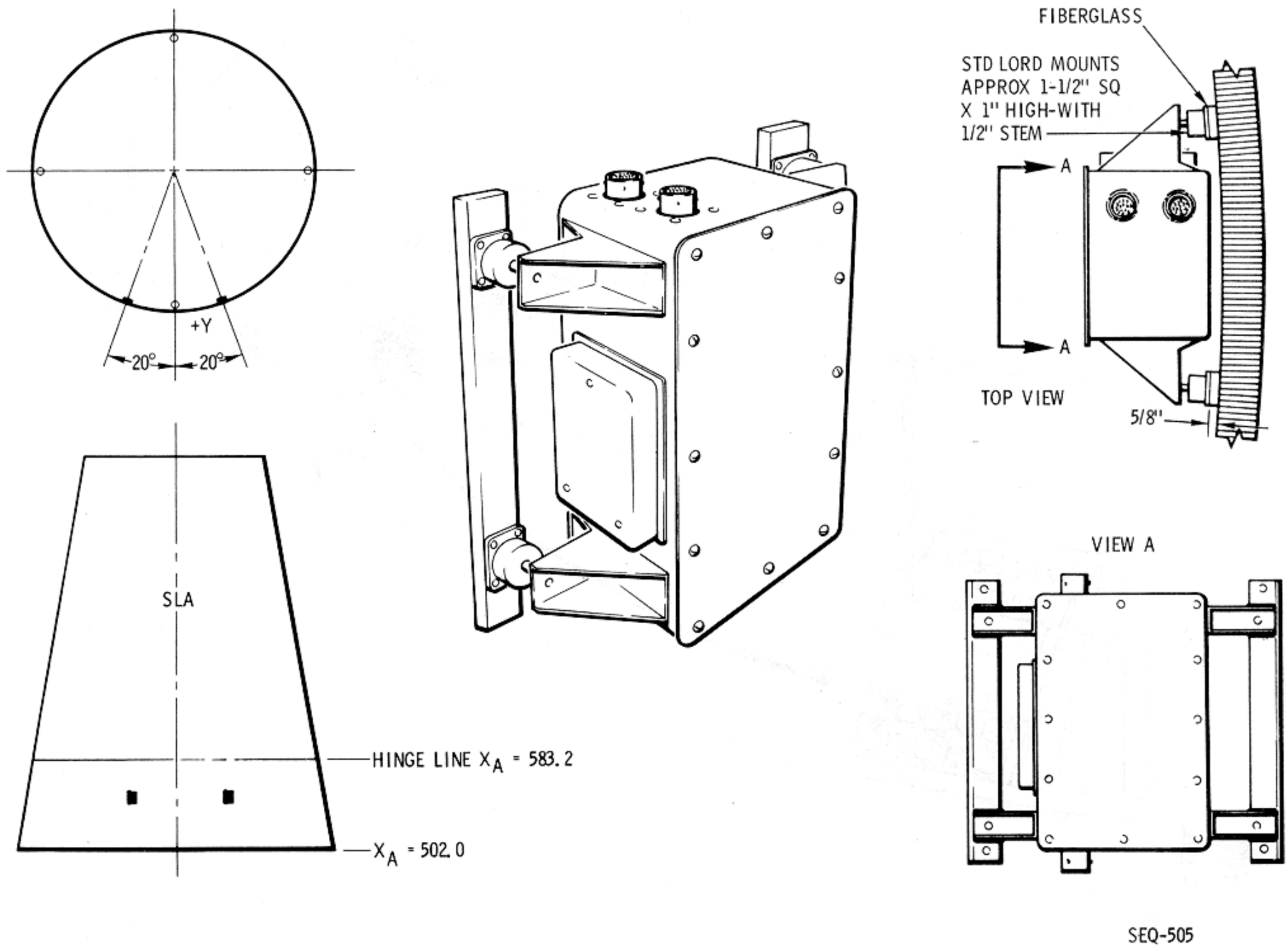

Figure 2.9-6. LSSC Location

titanium tubing which is insulated against heat of rocket motor plumes. Two Saturn V dampers, one of which cannot be illustrated in this perspective, interface with a tower arm of the mobile launcher. Switches in the tower arm are tripped by the dampers, and clamps are mechanized to secure the LET legs to prevent sway caused by wind loads.

Circuits of the SECS integrate the MESC, ELSC, and LDEC providing manual and/or automated controls for initiating ordnance devices which are utilized in the following:

a. Breaking frangible nuts which retain the LET legs to the CM structure.

b. Igniting the launch escape motor (LEM), tower jettison motor (TJM), and pitch control motor (PCM) as required for nominal mission or abort maneuvers.

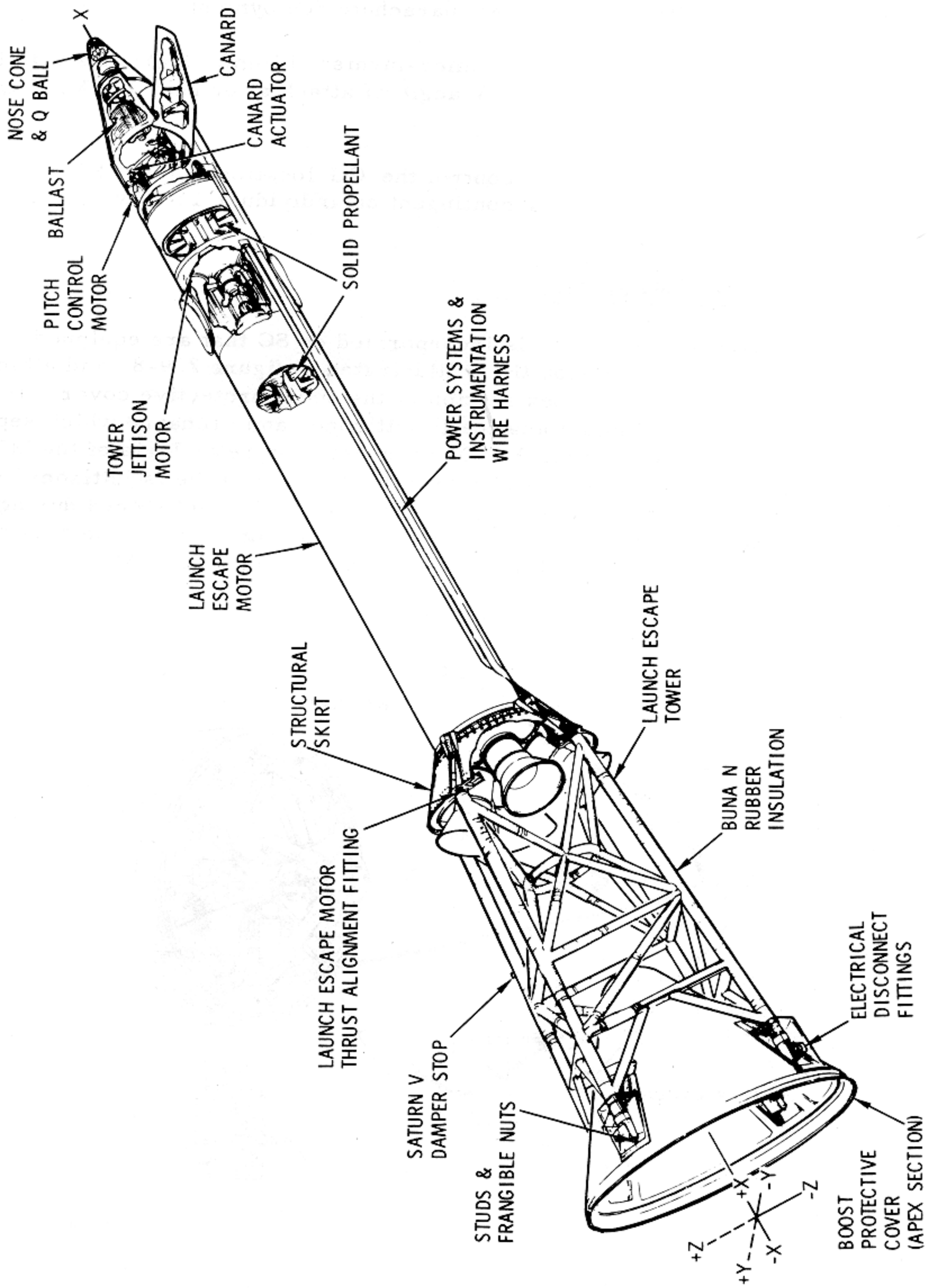

SEQ-65E

Figure 2.9-7. Launch Escape Tower Assembly

c. Deployment of the canards as required to orient the launch escape vehicle (LEV) with the aft heat shield forward during LES aborts. This orientation contributes to efficient parachute deployment.

A Q-ball, which is a customer-furnished item, interfaces with the sequential systems to monitor LV angle of attack at or near the MAX Q region during ascent.

Ballast is installed to control the CG location of the LEV. The amount of ballast required is contingent on individual LEV weight and balance data.

2.9.2.2 Probe Passive Tension Tie.

A passive tension tie is incorporated on SC that are equipped with a docking probe. The tension tie is illustrated in figure 2.9-8, and attaches the docking probe to the apex section of the boost protective cover. During LES aborts the LET is automatically jettisoned and ordnance which separates the docking ring from the CM is initiated by relay logic of the MESC and LDEC; therefore, in this sequence the docking probe is jettisoned with the LET because of the tension tie. When the LET is jettisoned during a nominal ascent the docking ring ordnance is not initiated and the tension tie is snapped from the docking probe by thrust from the TJM.

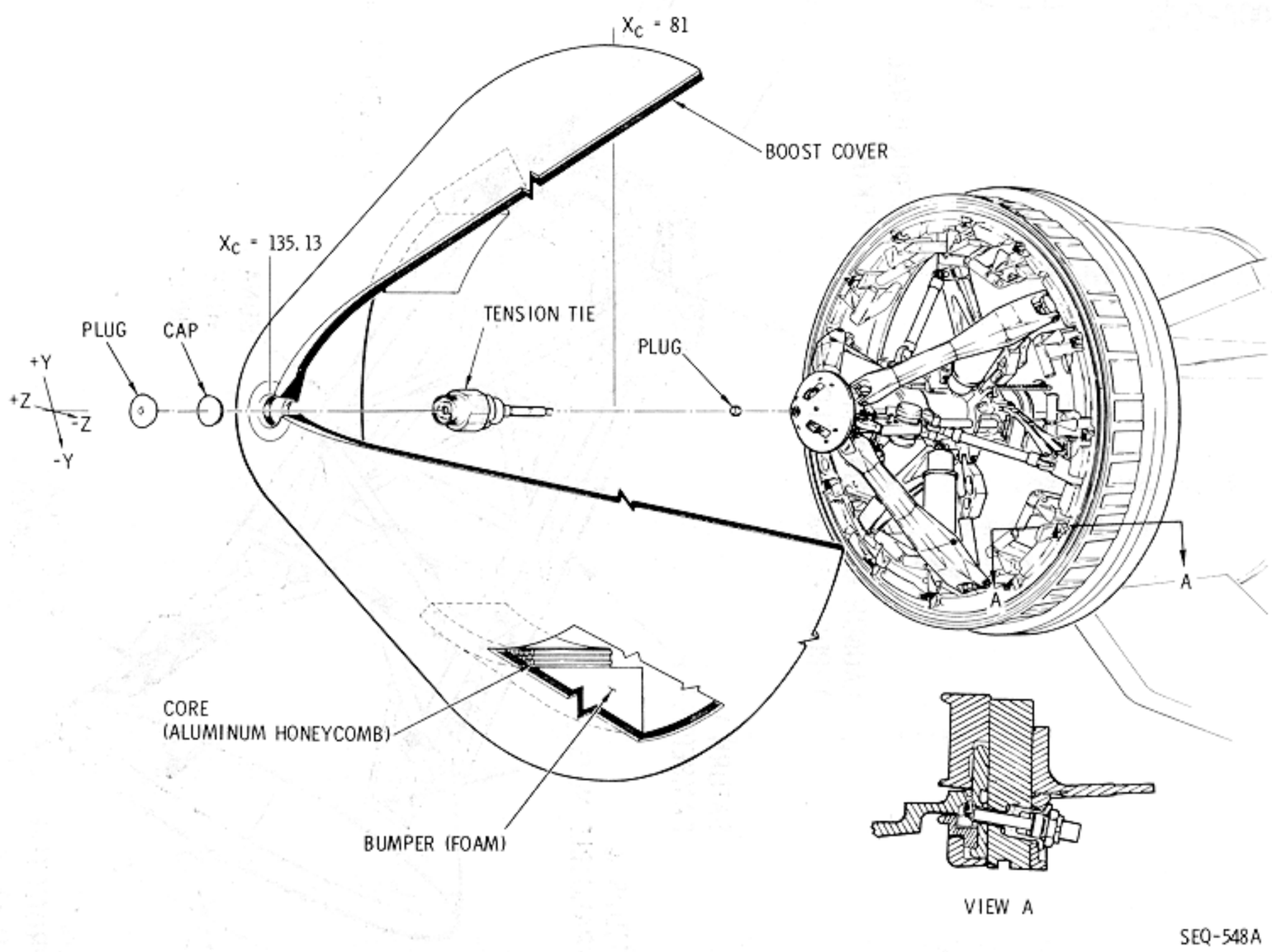

Figure 2.9-8. Probe Passive Tension Tie

2.9.2.3 Docking Probe Retraction.

On SC so equipped, docking probe retraction requires pyro power from the SECS. Burst diaphragms are used to contain nitrogen in four high-pressure cylinders which are included within the docking probe. The nitrogen is used to retract the probe, and the diaphragms are ruptured by plungers which are activated by ordnance devices. Mechanization and control of the docking probe is included in Section 2.13, Docking and Crew Transfer.

2.9.2.4 S-IVB/LM Separation.

After transposition and docking, the crew will connect the umbilicals which will mate the CM and the LM electrical circuits, section 2.13. This electrical interface will enable the utilization of the integrated LDEC and LSSC for S-IVB/LM separation. The LM legs are secured to the SLA by clamps which are unlatched by ordnance devices.

2.9.2.5 Separation of the CSM From the LV.

When the command service module (CSM) is to be separated from the LV either for nominal mission or abort requirements, the MESC and LDEC are utilized (figure 2.9-9). Manual controlled or automated circuits,

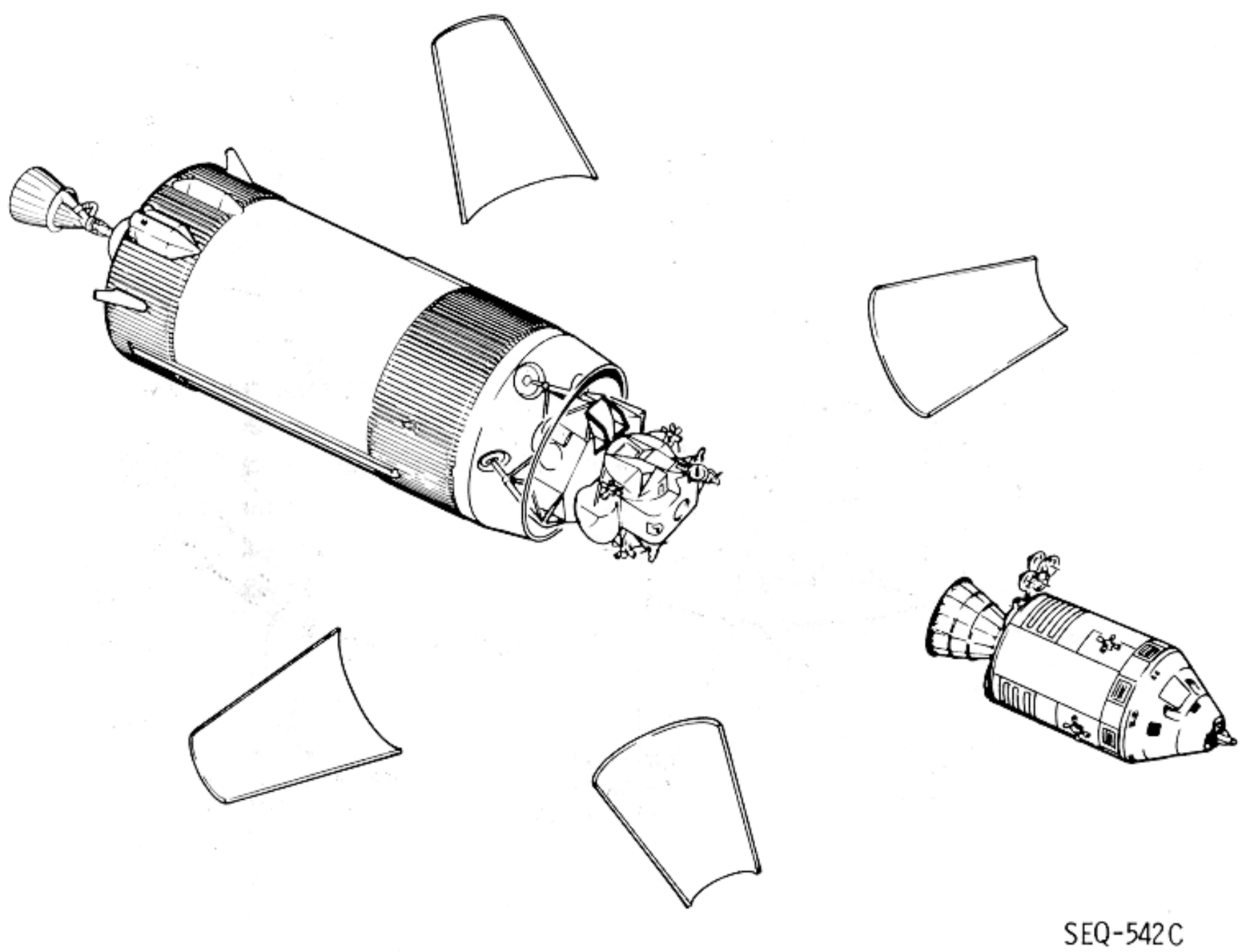

Figure 2.9-9. Normal CSM/LV Separation

SEQ

whichever are utilized, will initiate explosive trains that will sever and jettison the SLA panels (figure 2.9-10).

2.9.2.6 CM-SM Separation and SM Jettison.

Prior to the entry phase of a nominal mission, the MESC and LDEC will be utilized to separate the CM from the SM and the SMJC will automate jettisoning the SM (figure 2.9-11).

2.9.2.7 Forward Heat Shield (Apex Cover).

Section 1 includes a description of the forward heat shield structure; automated and manual controlled circuits for jettisoning this heat shield are included in the integrated MESC, ELSC, and LDEC. Mechanization of apex cover jettison is accomplished by the use of thrusters and a drag parachute. Figure 2.9-12 illustrates pressure cartridges installed in a breech. When gas pressure is generated by the pressure cartridges, two pistons will be forced apart and a tension tie will be broken. The lower piston will be forced against a stop and the upper piston will be forced out of its cylinder. The piston rod ends are fastened to forward heat shield fittings and the apex cover is forced away from the CM. Only

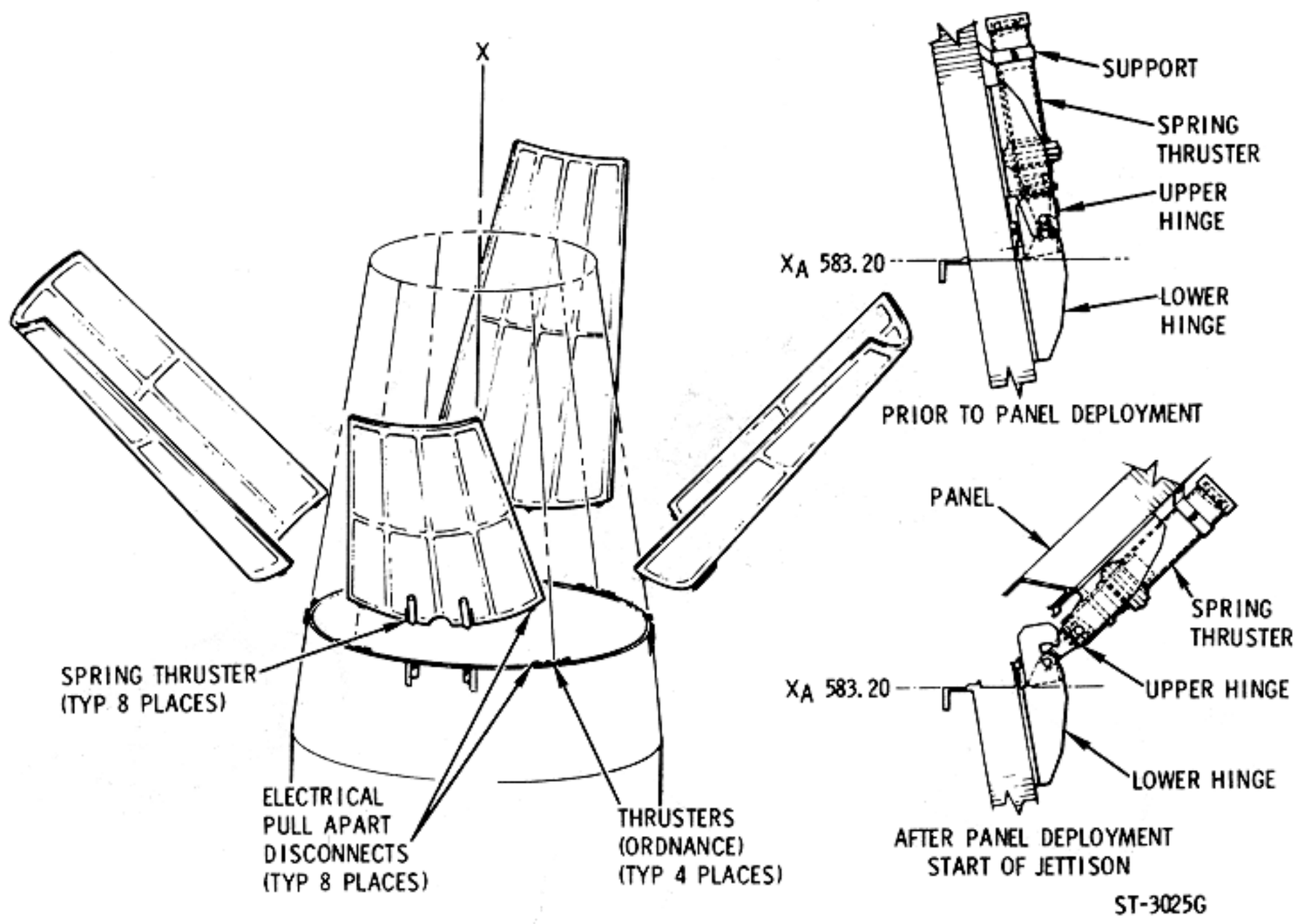

Figure 2.9-10. SLA Panel Jettison

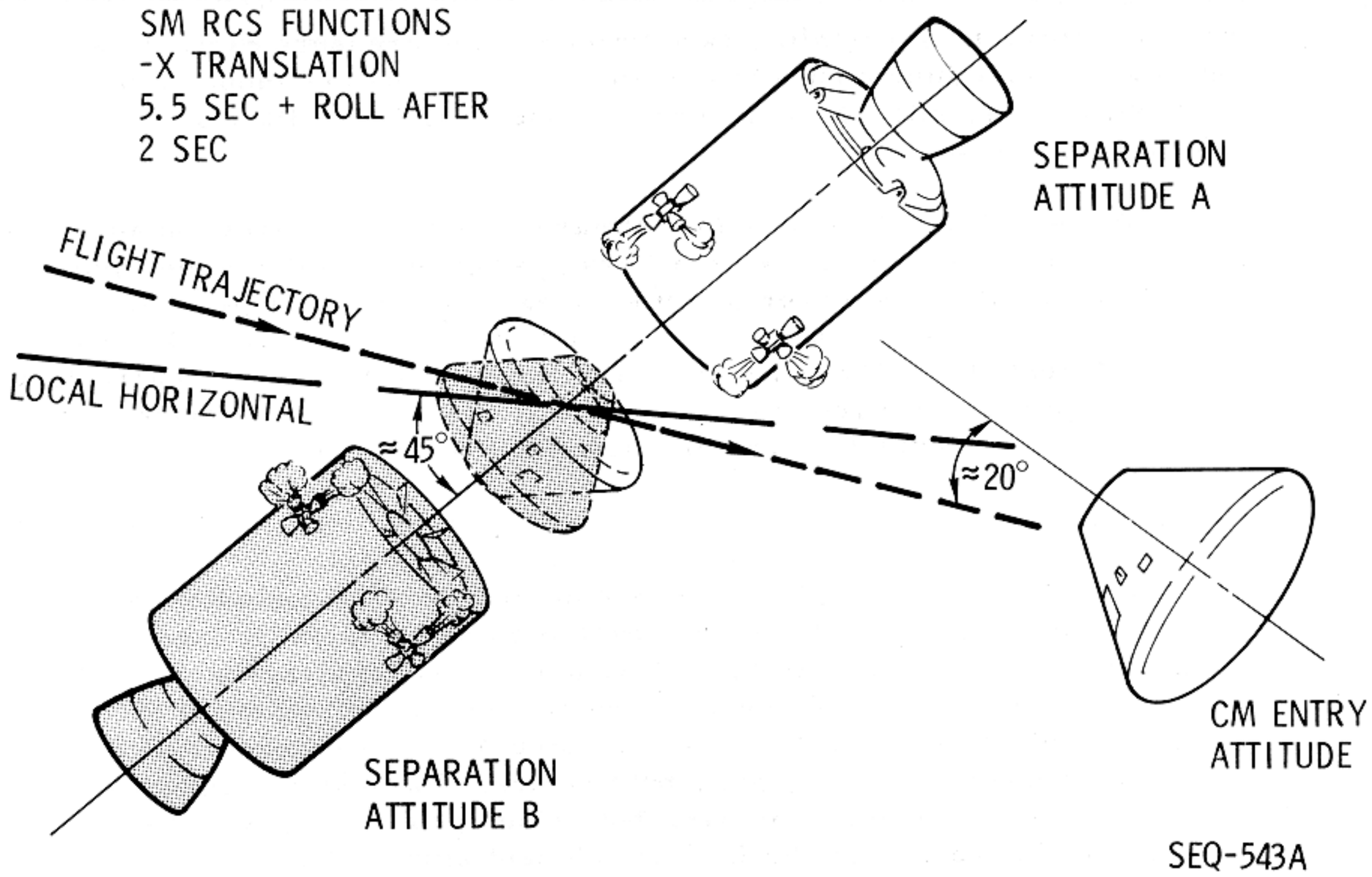

Figure 2.9-11. Normal CM-SM Separation and SM Jettison

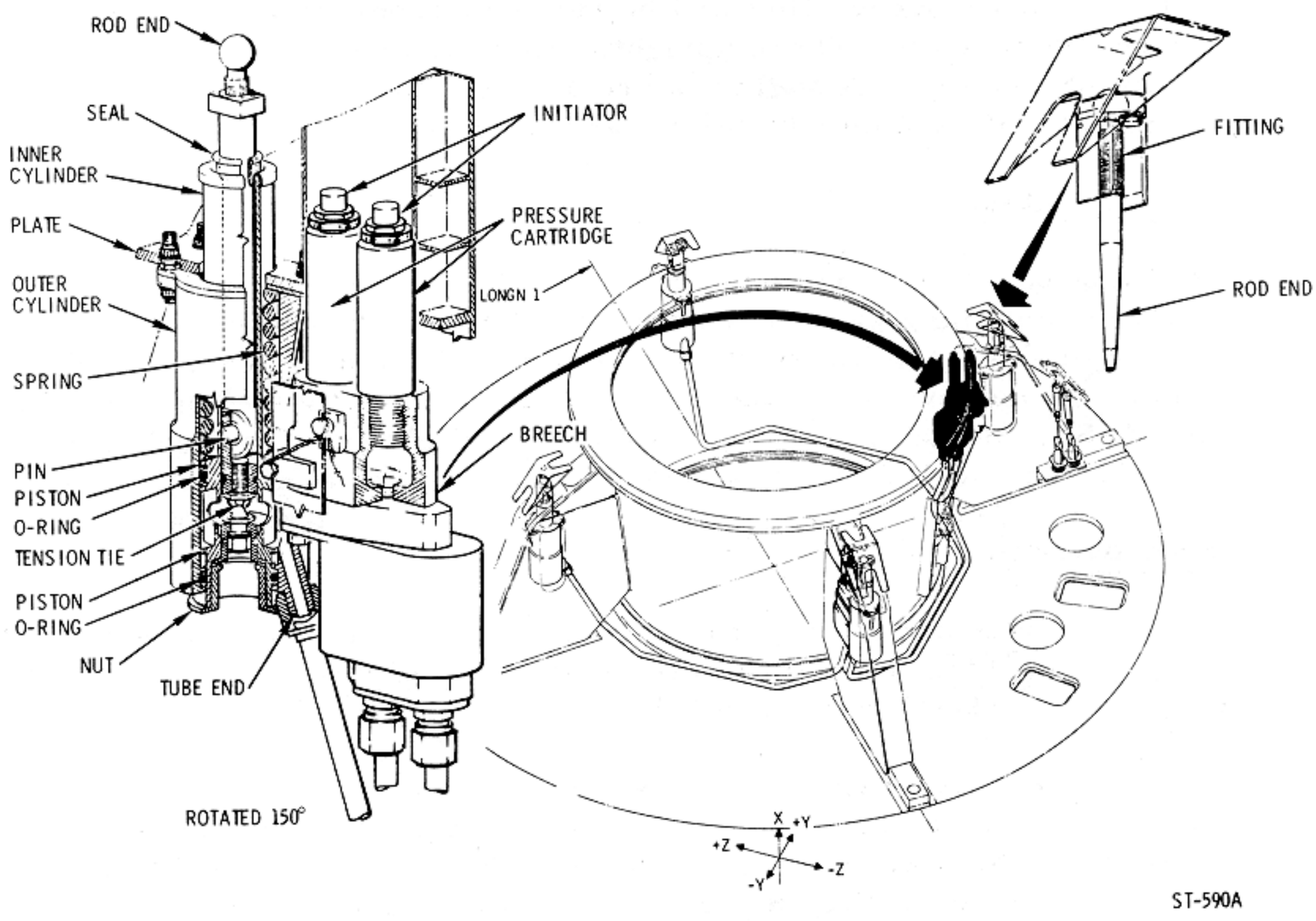

Figure 2.9-12. Forward Heat Shield Attachment and Thruster Assembly

SEQ

two of the thruster assemblies have breeches and pressure cartridges installed and plumbing connects the breeches to thrusters mounted on diametrically opposite CM structural members; this constitutes redundancy.

Figure 2.9-13 illustrates the forward heat shield separation augmentation system. The mortar deployed drag parachute, as the name implies, is used to drag the apex cover out of an area of negative air pressure following the CM and will prevent recontact of the apex cover with the CM. Lanyard-actuated switches are used to initiate mortar pressure cartridges. A lanyard-actuated electrical disconnect will deadface the electrical circuitry involved after the drag parachute has been deployed.

2.9.2.8 ELS Equipment.

The apex cover must be jettisoned before the ELS equipment may be utilized. Figure 2.9-14 illustrates how the ELS equipment is installed beneath the forward heat shield. All parachutes are mortar-deployed to insure that they are ejected beyond boundary layers and turbulent air around and following the CM. An RCS engine protector prevents damage to CM RCS rocket engines by parachute risers. Parachute risers are also protected from damage by parachute riser protectors, which are spring-loaded covers over the LET attachment studs. The LES tower electrical receptacles are used to connect LET interface wiring, and the mating parts of the receptacles are pulled apart when the LET is jettisoned. A sea recovery sling will be removed from stowage by members of the recovery team. Three uprighting flotation bags are installed under the main parachutes. A switch is provided for the crew to deploy the sea dye marker and swimmer umbilical any time after landing.

2.9.2.9 ELS Parachutes.

Eight parachutes are used in the ELS parachute system (figure 2.9-15). The drogue and main parachutes are deployed in a reefed condition to prevent damage from transient loads during inflation. The ELSC will automate the deployment of these parachutes when activated by relay logic in the MESC. Switches are provided for the flight crew to disable the automation and deploy the parachutes by direct manual control.

2.9.2.10 Reefing System.

The drogue and main parachutes are reefed with lines rove through reefing rings, which are sewn to the inside of the parachute skirts and reefing line cutters (figure 2.9-16).

When the suspension lines stretch, a lanyard will pull the sear release from the reefing line cutter, and burning of a time-delay compound will be started (figure 2.9-17). When the compound has burned, a propellant will be ignited and a cutter will be driven through the reefing line.

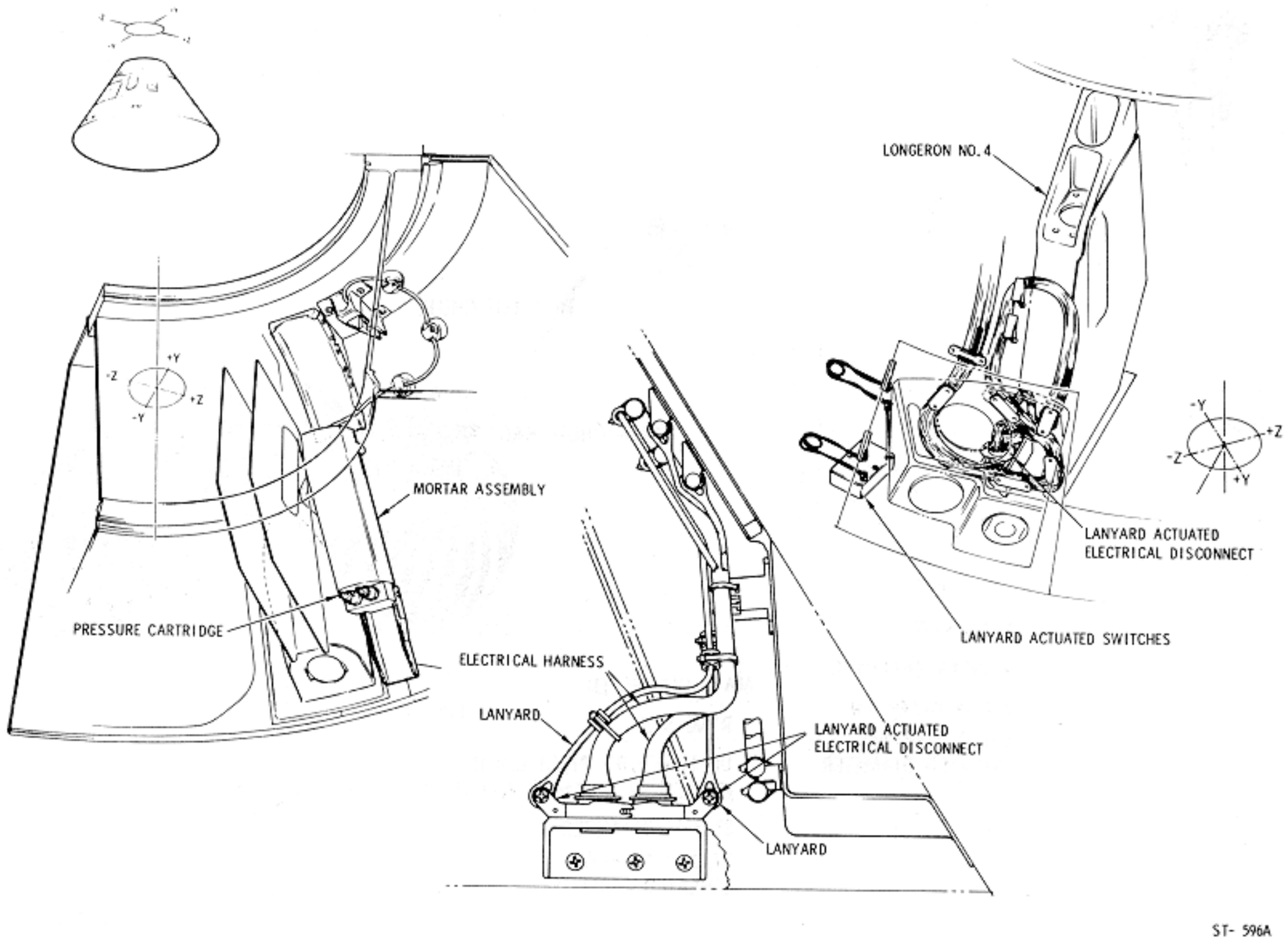

Figure 2.9-13. Forward Heat Shield Separation Augmentation System

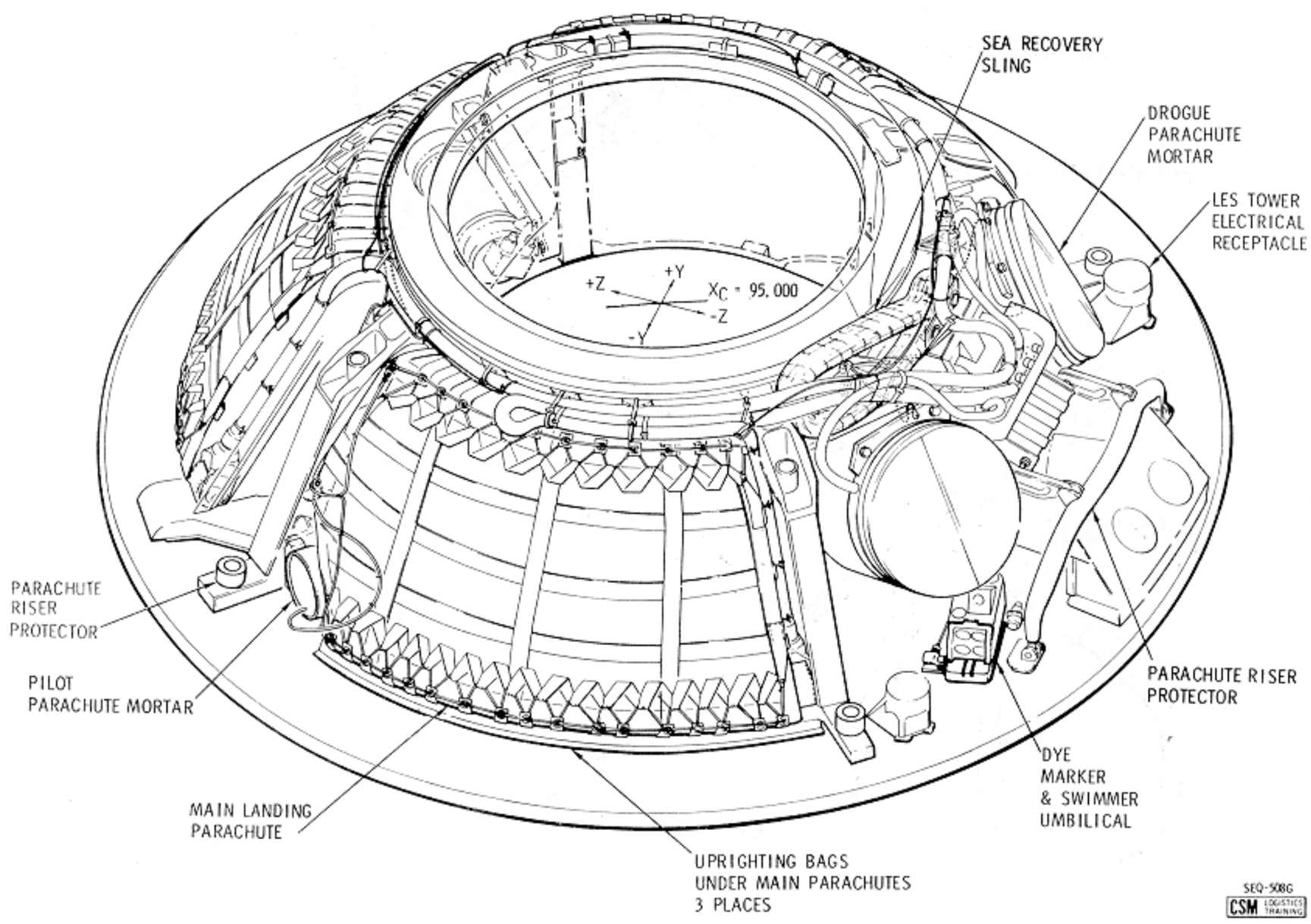

Figure 2.9-14. ELS Equipment

SEQ

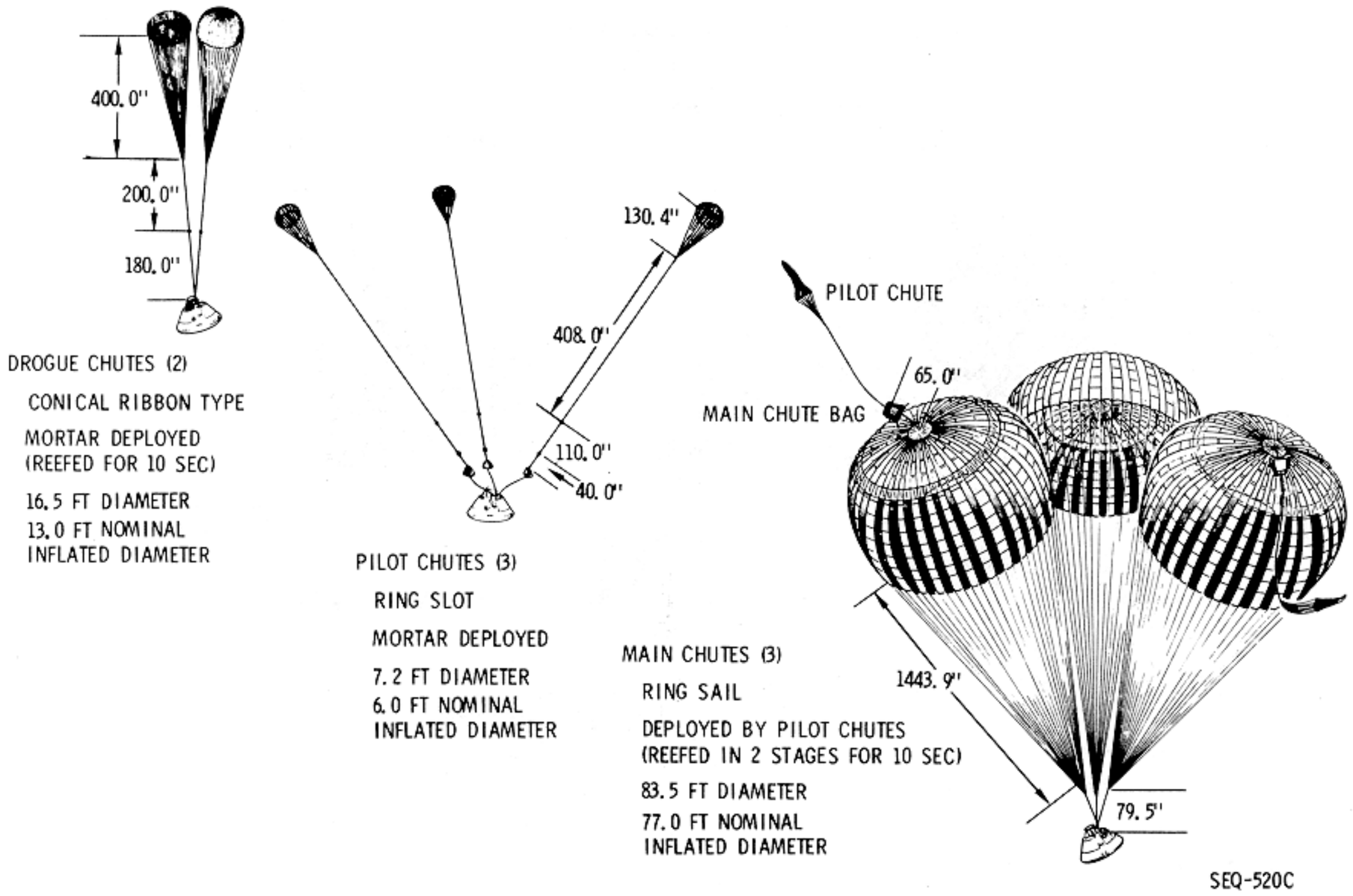

Figure 2.9-15. ELS Parachutes

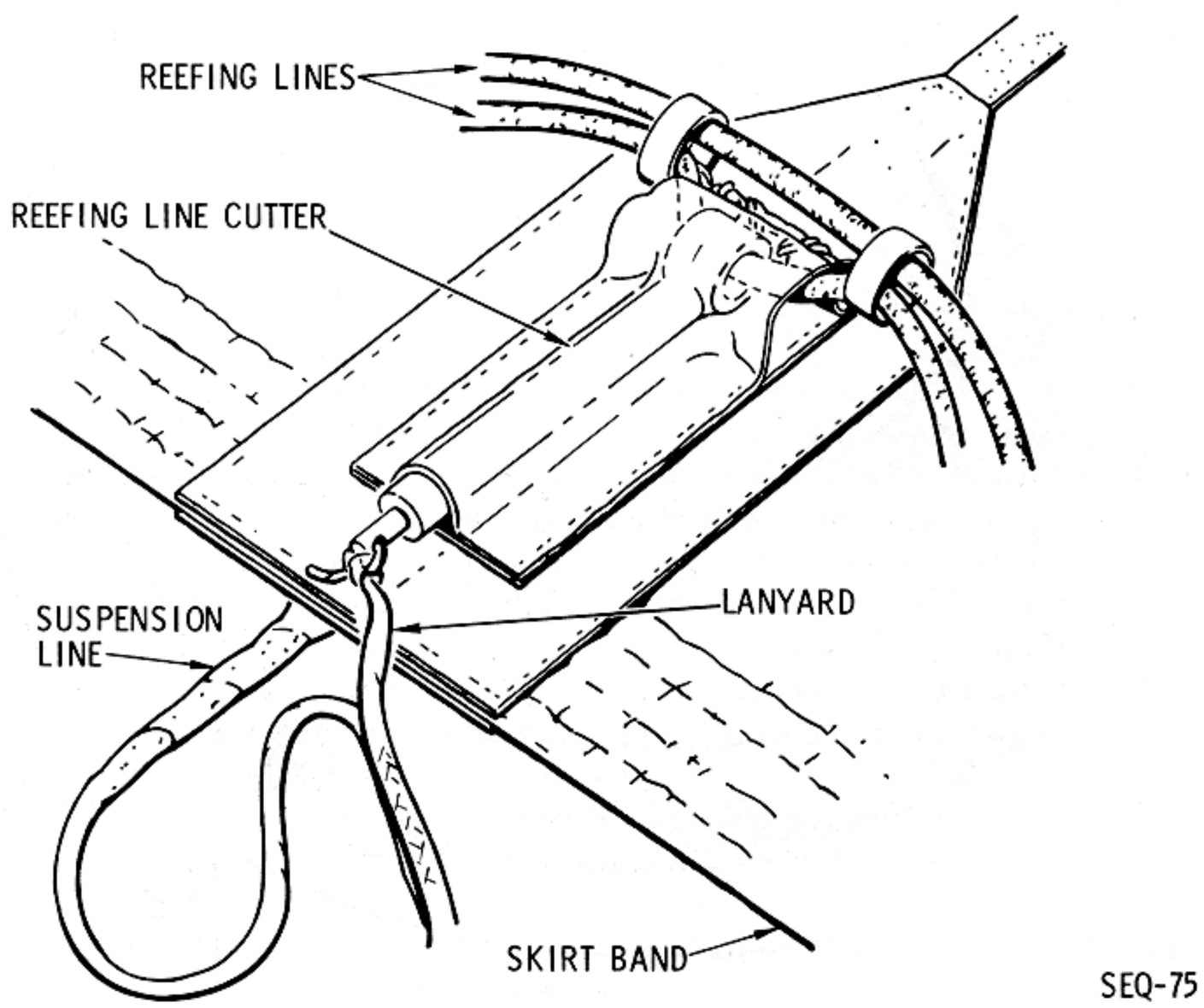

Figure 2.9-16. Reefing Line Cutter Installation

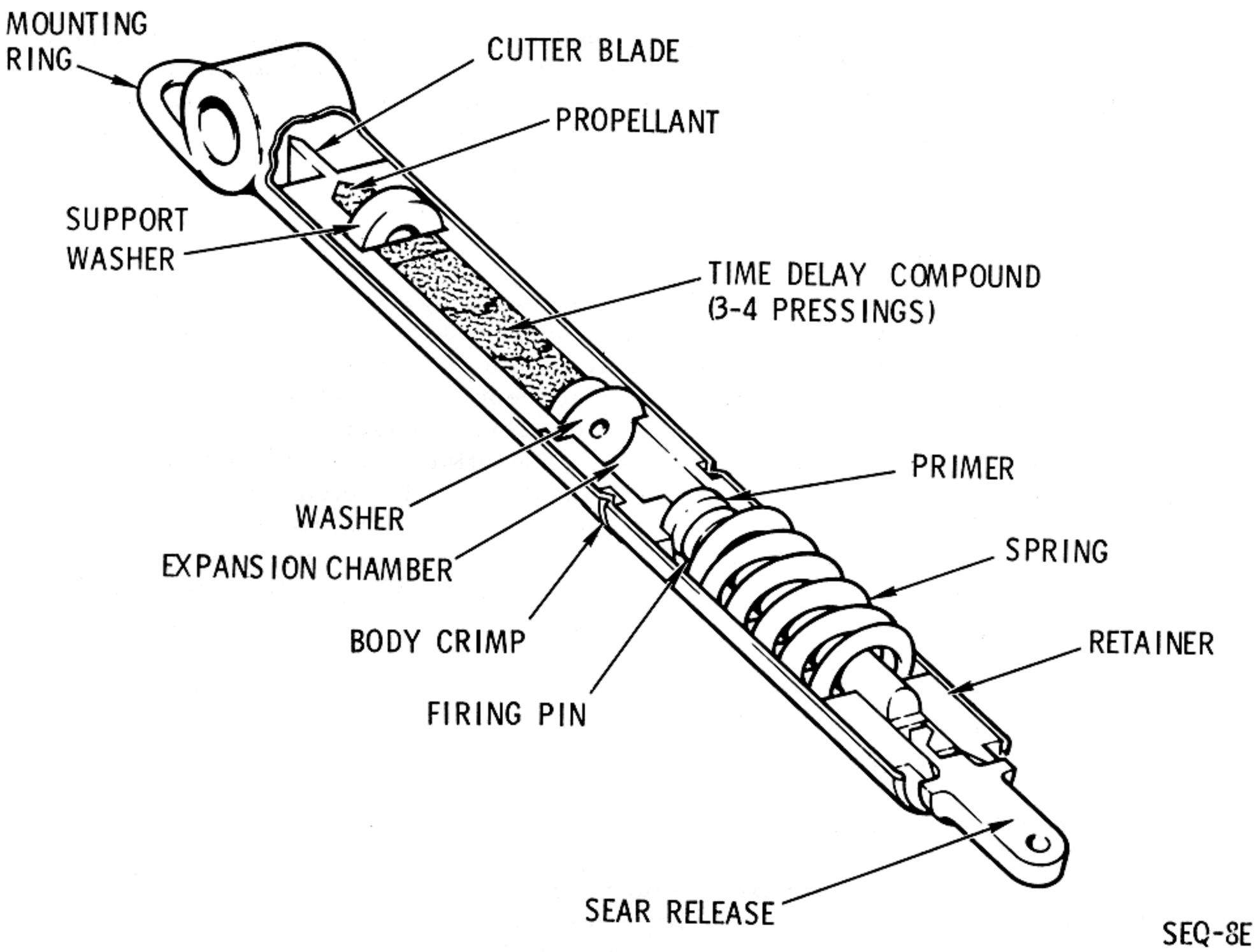

Figure 2.9-17. Reefing Line Cutter

SEQ

Each of the drogue parachutes has two reefing lines with two cutters per line to prevent disreefing in case any one reefing line cutter should fail prematurely because a single reefing line cut in one place will disreef a parachute. Each of the three main parachutes has three reefing lines with two cutters per line. The time delay of four of the cutters on each main parachute (two lines) is 6 seconds. At this time the main parachutes will be allowed to open slightly wider than when deployed. The time delay of the remaining two cutters on each main parachute is 10 seconds. At this time the parachutes will be allowed to inflate fully.

Reefing line cutters are also utilized in the deployment of two very high frequency (VHF) antennas and one flashing beacon light during descent. These recovery devices are retained by spring-loaded devices which are secured with parachute rigging cord. The cord is rove through reefing line cutters and the sear releases are pulled by lanyards secured to the main parachute risers.

2.9.2.11 Design Criteria.

Dual redundancy with manual backup has been employed in the design of the sequential system critical circuits. This ensures that in all cases the effects of a component failure, in the prime failure mode, will not:

a. Prevent system operation when required
b. Cause inadvertent system operation.

2.9.2.12 Circuit Concept.

In most Apollo applications, premature operation of an ordnance system is hazardous to the crew and could cause loss of mission objectives. Identification and correction of single points of failure, therefore, are prime objectives in the SECS circuit concept. Elimination of single failures is accomplished by the addition of series contacts (dual) in each firing circuit. The probability of premature operation of an ordnance device has been greatly reduced by the utilization of series elements. On the other hand, the reliability of the firing network to operate has been reduced. The overall firing circuit reliability is enhanced by the use of redundant firing circuits. Each circuit is independent of the other with each output controlling its own ordnance component. Each of these redundant circuits is contained in independent systems which are designated systems A and B. Figure 2.9-18 illustrates one of the redundant systems of a typical firing network. This illustration also shows that some control circuits for sequential events utilize the same circuit concept.

2.9.3 FUNCTIONAL DESCRIPTION.

The origin of signals and functions of the sequential systems are illustrated in figure 2.9-19. Launch escape system (LES) aborts may be executed from the launch pad, or during ascent, until launch escape tower (LET) jettison. Prior to lift-off, LES abort signals are initiated by manual control only because the automatic abort circuits of the EDS are activated at lift-off. Thereafter LES aborts may be initiated by manual control or by automatic control during the period that the EDS automatic abort circuits are active. LES aborts are categorized as modes 1A, 1B, and 1C aborts. Service propulsion system (SPS) aborts are categorized as modes 2, 3, and 4 aborts and may be initiated after the LET has been jettisoned. No provisions are made to initiate SPS aborts automatically.

2.9.3.1 Normal Mission Functions.

In addition to control for aborts, the sequential systems provide for the monitoring of vital LV parameters and control for other essential mission functions as follows:

a. Sensing and displaying LV status:
   1. Thrust OK lights for all booster engines

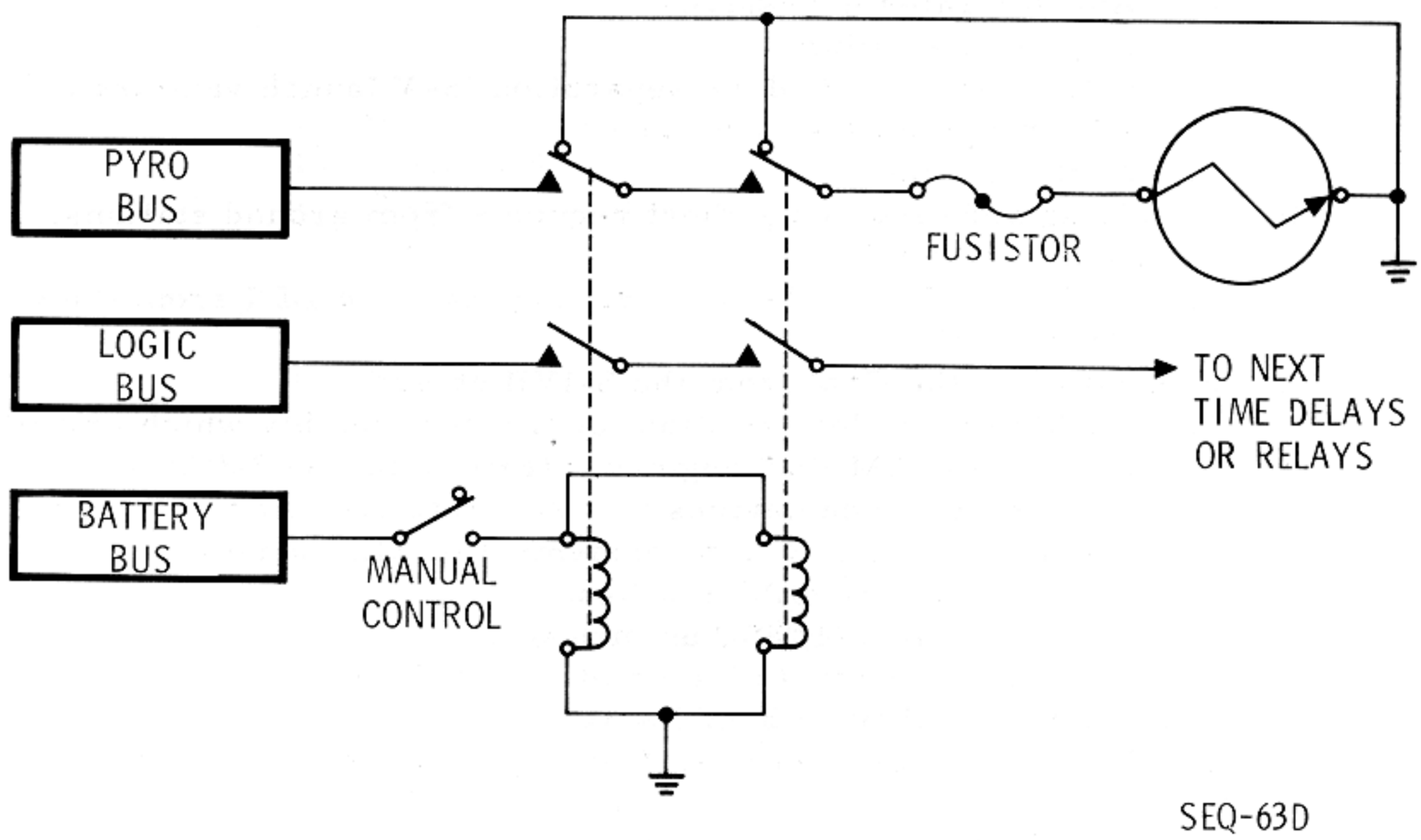

Figure 2.9-18. Circuit Concept

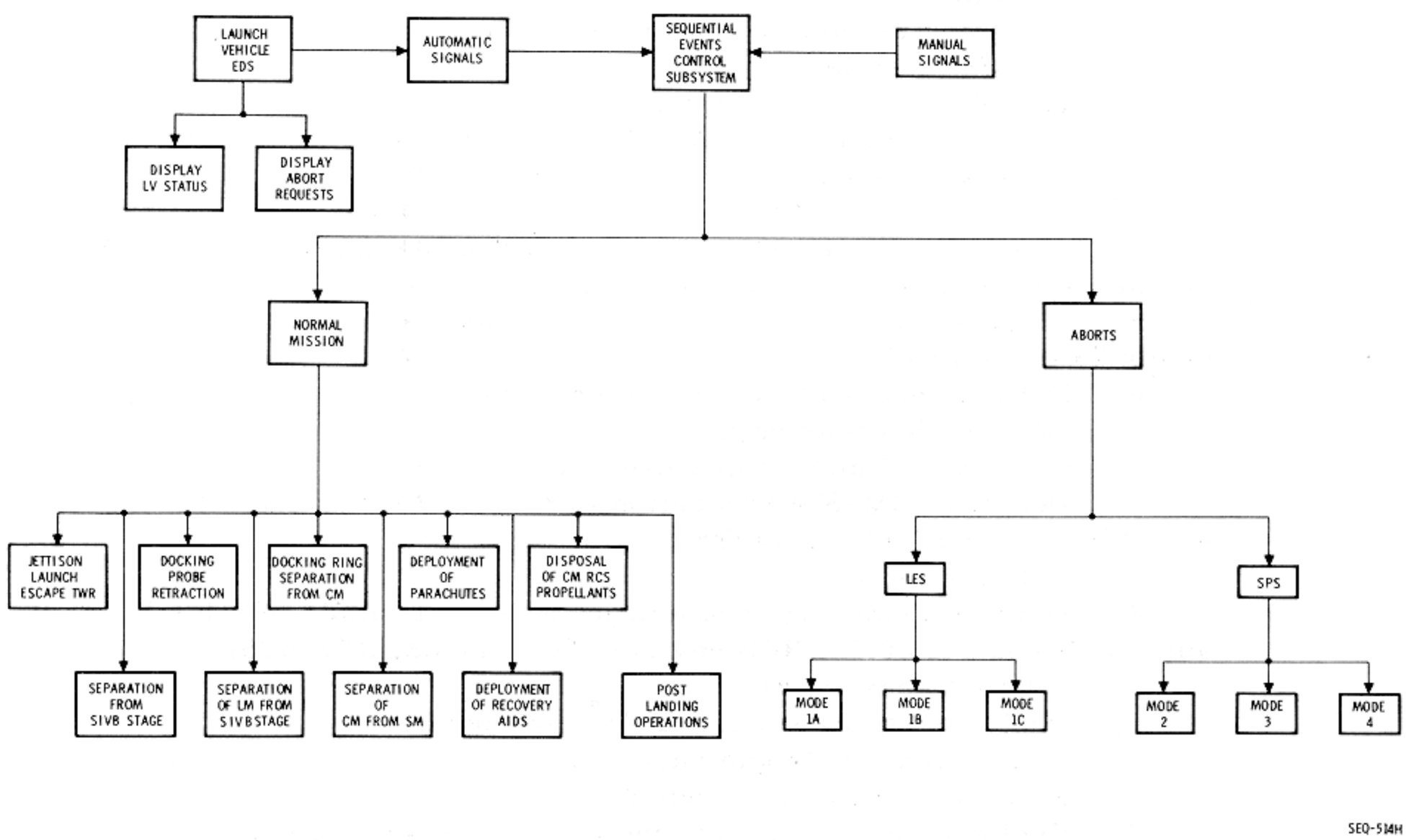

Figure 2.9-19. Sequential Systems Functional Block Diagram

SEQ

2. Angular rates excessive
3. IU guidance failure
4. S-II stage second plane separation (S-V launch vehicles only)
5. LV propellant tank pressures
6. Angle of attack.

b. Receiving and displaying abort requests from ground stations.

c. Jettisoning of the LET:
1. Initiate ordnance devices that separate the LET from the CM
2. Ignite TJM.

d. Separation of the CSM from the S-IVB stage:
1. Enable controller reaction jet on/off assembly which provides automatic control of SM RCS engines. (Enable SM RCS/SCS.)
2. Initiate ordnance devices that separate the SLA:
(a) Initiate cutting and deployment of SLA panels
(b) Separate SC/LV umbilical
(c) Separate LM/GSE umbilical.

e. LM docking probe retraction on SC so equipped.

f. Separation of LM from S-IVB stage:
1. Initiate ordnance devices that separate the LM legs from the SLA
2. Deadface LM pyro separation power
3. Initiate SLA/LM umbilical guillotine.

g. Separation of the LM docking ring on SC so equipped.

h. Separation of the CM from the SM.
1. Start SMJC:
(a) Lock up fuel cell power to SMJC
(b) Start -X jets of SM RCS
(c) Start +roll jets of SM RCS
(d) Stop +roll jets of SM RCS.
2. Deadface CM-SM umbilical power.
3. Pressurize CM RCS
4. Transfer electrical power from SM RCS engines to CM RCS engines and deadface SMJC start signal
5. Transfer entry and postlanding battery power to main d-c buses (main bus tie)
6. Initiate separation ordnance devices:
(a) CM-SM tension ties
(b) CM-SM umbilical guillotine
7. Deadface CM-SM separation pyro power (pyro cutout).

i. Deployment of ELS parachutes:
1. Activate ELSC
2. Disable controller reaction jet on/off assembly which inhibits automatic control of CM RCS engines (Disable CM RCS/SCS)
3. Jettison apex cover
4. Deployment of apex cover drag parachute
5. Deployment of drogue parachutes
6. Release of drogue parachutes
7. Deployment of pilot parachutes of the main parachutes.

j. Deployment of recovery devices:
   1. Two VHF antennas
   2. One flashing beacon light.
k. Burning of CM RCS propellants and pressurant.
l. Postlanding functions:
   1. Release of main parachutes.

2.9.3.2 Mode 1A Abort.

The functions of a mode 1A abort are:

a. Relay booster engine cutoff (BECO) signal to the IU
b. Reset and start the commander's event timer
c. Separation of the CM from the SM.
   1. Deadface CM-SM umbilical power
   2. Pressurize CM RCS
   3. Transfer electrical control from SM RCS engines to CM RCS engines
   4. Transfer entry and postlanding battery power to main d-c buses (main bus tie)
   5. Initiate separation ordnance devices:
      (a) CM-SM tension ties
      (b) CM-SM umbilical guillotine.
   6. Fire LEM and PCM
   7. Start automated rapid propellant dump (CM RCS propellant and pressurant jettison):
      (a) Initiate oxidizer dump
      (b) Initiate interconnect of A and B fluid systems
      (c) Close propellant shutoff valves
      (d) Initiate fuel dump
      (e) Initiate helium dump (purge).
d. Deploy canards
e. Deployment of ELS parachutes:
   1. Activate ELSC
   2. Disable controller reaction jet on/off assembly which inhibits automatic control of CM RCS engines (Disable CM RCS/SCS)
   3. Jettison LET
   4. Separate LM docking ring on spacecraft so equipped
   5. Jettison apex cover
   6. Deployment of apex cover drag parachute
   7. Deployment of drogue parachutes
   8. Release of drogue parachutes
   9. Deployment of pilot parachutes of the main parachutes.
f. Deployment of recovery devices:
   1. Two VHF antennas
   2. One flashing beacon light.
g. Postlanding functions:
   1. Release of main parachutes.

SEQ

2.9.3.3 Modes 1B and 1C Aborts.

The functions of the modes 1B and 1C aborts are the same as those for a mode 1A abort with the following exceptions:

a. Firing of the PCM is inhibited

b. Automated rapid propellant jettisoning is inhibited. Propellants and pressurant of the CM RCS are disposed of as in a nominal entry and landing procedure.

c. Enable controller reaction jet on/off assembly which provides automatic control of CM RCS engines (Enable CM RCS/SCS).

2.9.3.4 Modes 2, 3, and 4 Aborts.

The functions of the sequential systems portion of an SPS abort are:

a. Relay BECO signal to the IU
b. Reset and start commander's event timer
c. Initiate CSM direct ullage (+X translation)
d. Relay signal to SCS to inhibit pitch and yaw rate stabilization
e. Separate CSM from the LV:
   1. Initiate ordnance devices that separate SLA:
      (a) Initiate severance and deployment of SLA panels
      (b) Separate SC/LV umbilical
      (c) Separate LM/GSE umbilical.
f. Enable controller reaction jet on/off assembly which provides automatic control of SM RCS engines (Enable SM RCS/SCS).

2.9.4 OPERATIONAL DESCRIPTION.

Figure 2.9-20 illustrates the operation and functions of the integrated sequential systems and zone references to this illustration are used in subsequent paragraphs. This is an operational/functional diagram and should not be misconstrued as an electrical schematic since many details of the electrical system are not included, i.e., ground returns are not shown except for the clarification of unique circuits. Also, initiator firing circuits are not complete in the operational/functional diagram. Figure 2.9-18 illustrates that normally closed contacts of firing relays are utilized to short the initiator to ground and that all initiator firing circuits are protected with fusistors. All initiators are grounded by relay logic and fusistors are incorporated even though the operational/functional diagram does not illustrate this feature. Generally, only one of the redundant systems is illustrated, which in this instance is system A; however, the redundant system is included when the two are not identical. Numerous crossover networks are illustrated where vital functions are concerned; in these instances, systems A or B components will activate and/or initiate the discrete requirements. Interface with other systems is limited to the effect the interfacing system has on sequential systems.

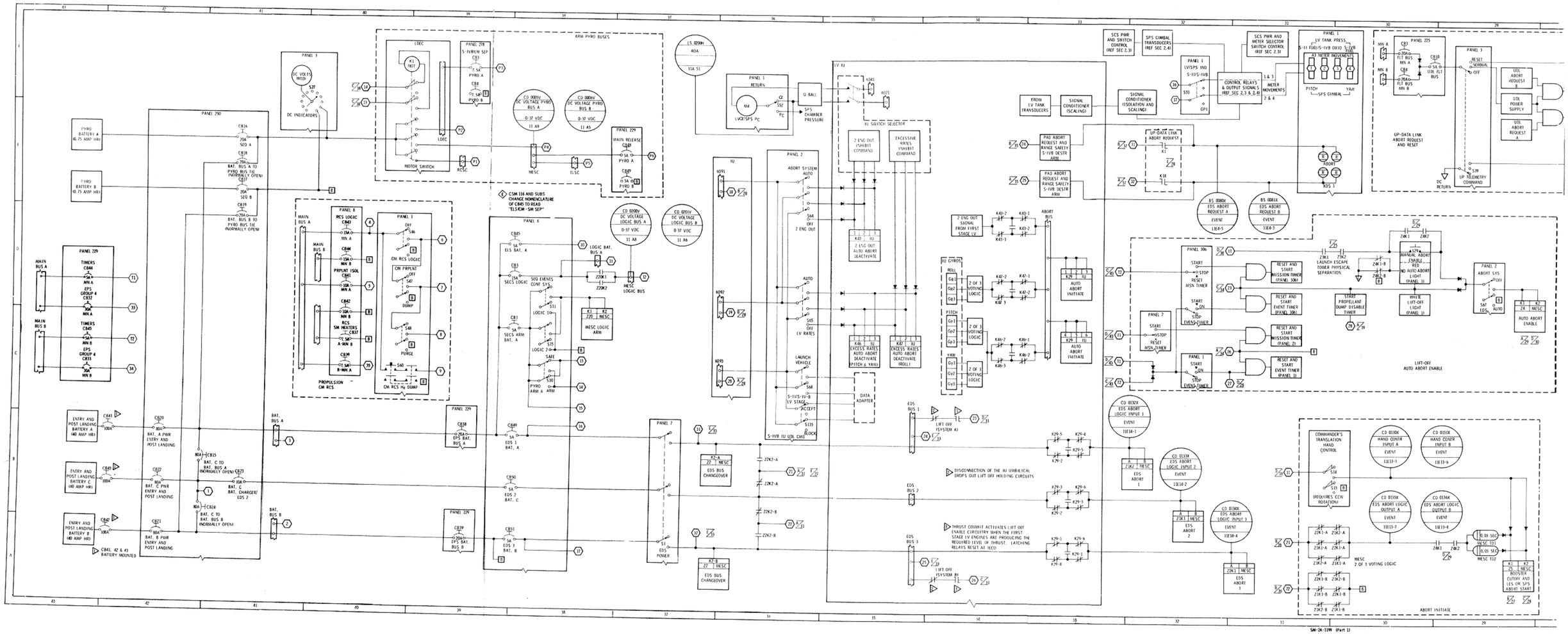

Figure 2.9-20. Sequential Systems Operational/Functional Diagram (Sheet 1 of 3)

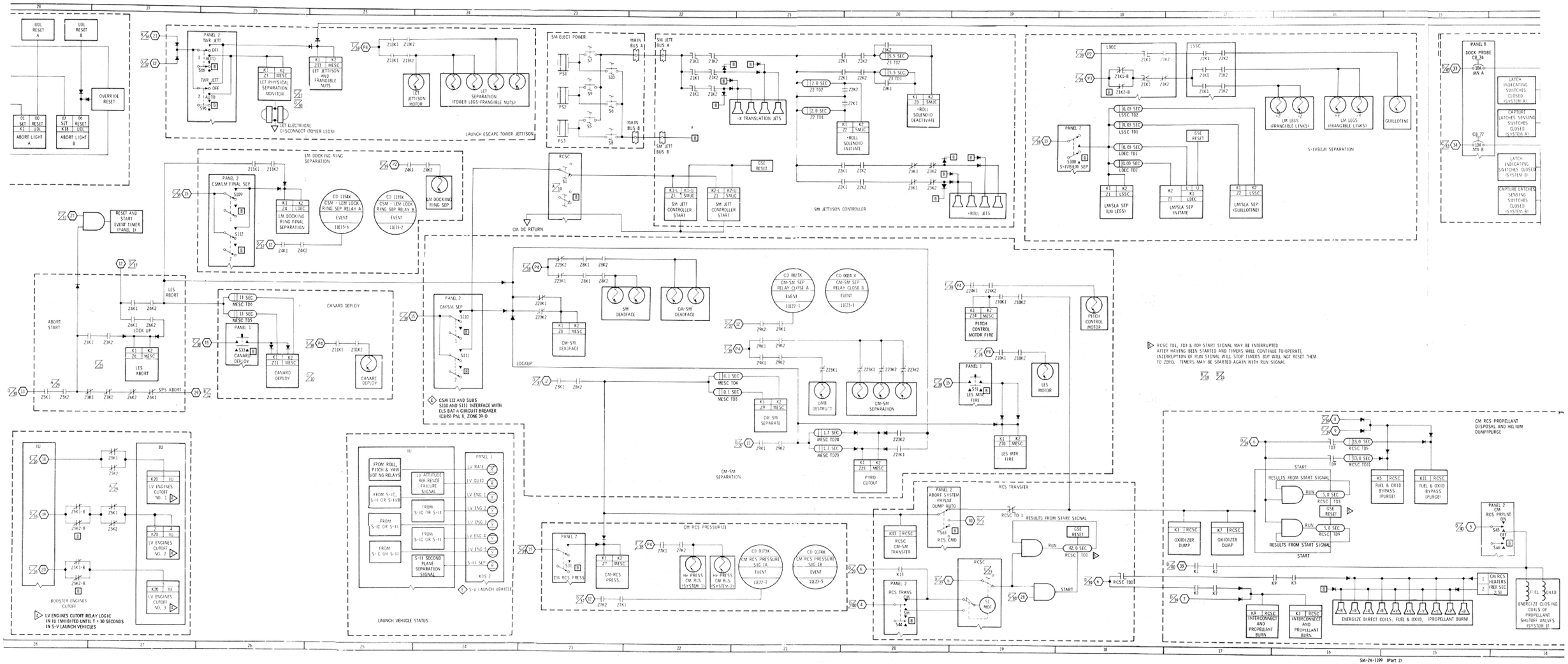

Figure 2.9-20. Sequential Systems Operational/Functional Diagram (Sheet 2 of 3)

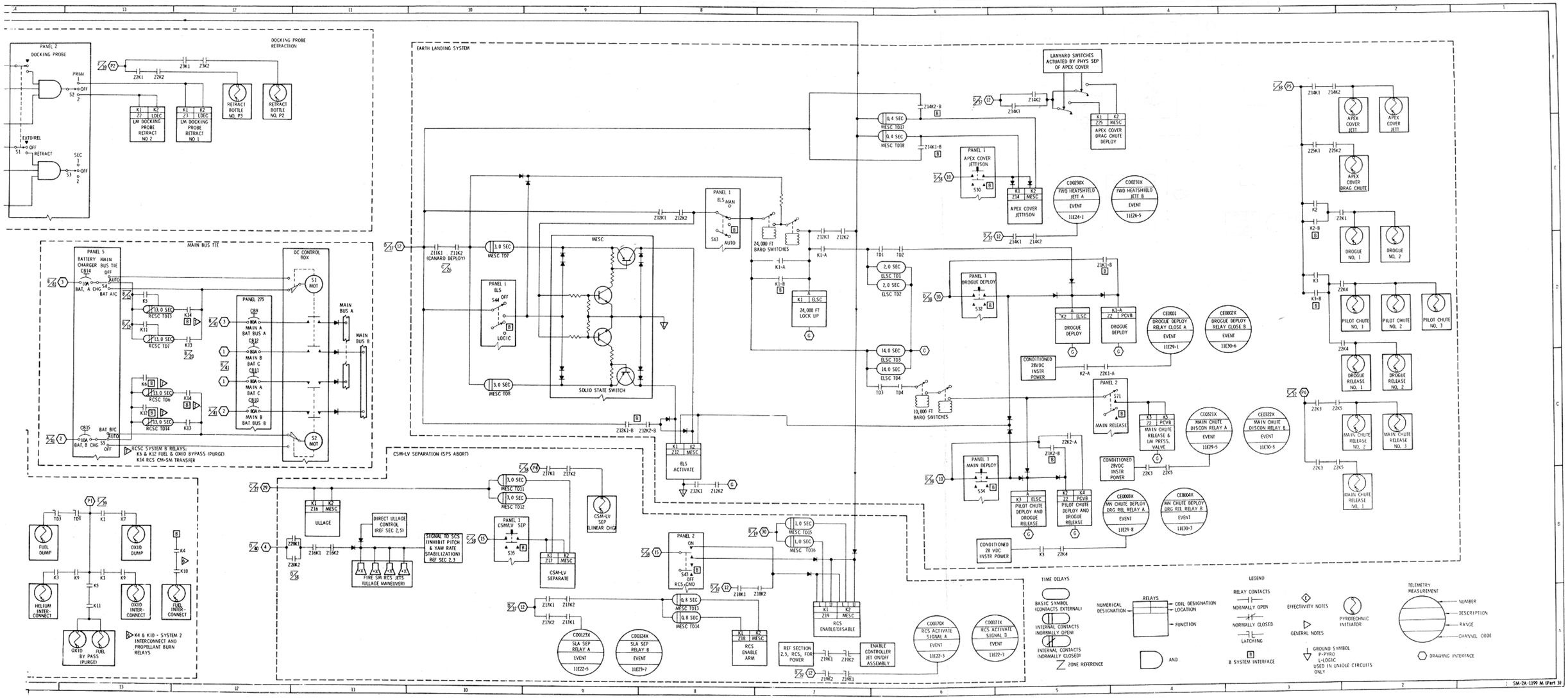

Figure 2.9-20. Sequential Systems Operational/Functional Diagram (Sheet 3 of 3)

2.9.4.1 Logic Power. (Zones 43-A and -B)

The source of logic power for the sequential systems is entry and postlanding batteries A, B and C which are described in Section 2.6, Electrical Power. Utilization of the circuit breakers in these power circuits is also described in the electrical power section.

2.9.4.1.1 Arming Sequential Systems Logic Circuits. (Zones 38 and 39-C and D)

Three circuit breakers are utilized in the system A sequential systems logic arming circuits, and their counterparts (not illustrated) are utilized in the system B circuits. The system A circuit breakers are ELS BAT A (CB 45), SEQ EVENTS CONT SYS LOGIC A BAT A (CB 3), and SEQ EVENTS CONT SYS ARM A BAT A (CB 1). The SEQ EVENTS CONT SYSTEM LOGIC switches 1 and 2 (S11 and S15) are two pole lever-lock switches and their function is SECS logic arming. When either of these switches is closed, the MESC LOGIC ARM relays will be energized in systems A and B and the MESC logic buses of both systems will be armed if the breakers of systems A and B have been closed.

2.9.4.2 Pyro Power. (Zones 38 through 43-E and -F)

Normally the source of pyro power is pyro batteries A and B; however, entry and postlanding batteries may be used as backup sources of pyro power. Closure of SEQ A or B circuit breakers (CB 16 or 17), zone 41-E, will complete battery power circuits to pyro system A or B. The condition of the pyro batteries may be determined by the use of a d-c voltmeter (M10) and selector switch (S27), zones 40, 41-E, and -F. If the voltage of either of the pyro batteries should be too low for crew safety, entry battery power may be utilized. Opening the appropriate PYRO/SEQ circuit breaker and closing the appropriate BAT BUS TO PYRO TIE circuit breaker (CB 18 or 19), zones 41-D and -E, will execute the selection of backup power.

SEQ

2.9.4.2.1 Arming Pyro Buses. (Zones 38 and 39-E and -F)

The system A SECS pyro buses are armed with a motor switch in the LDEC primarily for power conservation. When the motor is driven to either position, power is not required to hold the switch contacts in the selected position. The PYRO ARM switch (S10), zone 38-C, is used to control the LDEC motor switch (K1), zones 39, 40-E, and -F. Contacts of the motor switch control power to the LDEC, RCSC, and MESC pyro buses. Pyro power for the ELSC is derived from the MESC pyro bus.

2.9.4.2.2 SIVB/LM Separation (Zone 39-F)

Two circuit breakers are incorporated in the pyro power systems that are required to separate the LM from the SIVB stage. When mission requirements include this function, it will be necessary to close the SIVB/LM SEP, PYRO A, and/or PYRO B circuit breakers (CB 3 or CB 4).

2.9.4.2.3 Main Parachute Release (Zone 37-E)

Two circuit breakers are incorporated in the pyro power systems that are required to release the main parachutes from the CM. This is a design change to eliminate the hazard of main parachute release during descent. Closure of MAIN RELEASE, PYRO A and/or PYRO B circuit breakers (CB 48 or CB 49), should be accomplished as a post-landing operation only.

2.9.4.3 EDS Bus Changeover. (Zones 36, 37-A, and -B)

Battery C provides an alternate power source for the automatic initiation of an abort in the EDS and LET separation functions. These circuits are normally powered by batteries A and B. This is accomplished by the EDS bus changeover circuits in each MESC. Closure of the EDS POWER switch (S1), zones 37-A and -B, energizes EDS CHANGEOVER relays. When these relays are energized, battery A is coupled to system A and battery B is coupled to system B. In the event of a power failure in either system A or B, the relay logic will remove the existing battery and couple battery C to the system which had a power failure.

2.9.4.4 Lift-Off.

The lift-off originated in the IU, zones 34-A and -C, is the result of two L/V events:

a. Thrust commit activates lift-off enable circuitry when the first stage LV engines are producing the required level of thrust.

b. Disconnection of the IU umbilical will drop out lift-off holding circuits, which, in turn will switch the lift-off signal power to the CSM. The umbilical will be disconnected at the instant of actual lift-off.

If the appropriate circuit breakers and switches are in the configuration intended for a nominal launch the lift-off signal will initiate five events, zones 29 through 32-C and -D:

a. Reset and start event and mission timers (two each).

b. Start the automatic PROPELLANT DUMP AND PURGE DISABLE timer

c. Illuminate the white LIFT OFF light

d. Provide power to illuminate the red NO AUTO ABORT light in the event the MESC automatic abort circuits are not enabled

e. Enable the MESC automatic abort circuits by energizing the AUTO ABORT ENABLE relays.

2.9.4.5 Emergency Detection System.

The LV EDS monitors critical parameters associated with LV powered flight. Emergency conditions associated with these parameters are displayed to the crew on the MDC to indicate necessity for abort action. An additional provision of this system is the initiation of an automatic abort in the event of certain extreme time critical conditions, listed as follows:

a. Loss of thrust on two or more engines on the first stage of the LV.

b. Excessive vehicle angular rates in any of the pitch, yaw, or roll planes.

Concurrent with abort initiation (either manual or automatic), the system provides BECO action except for the first 30 seconds of flight in the case of a S-V LV. Range safety requirements impose the time restrictions.

2.9.4.5.1 EDS Automatic Abort Activation and Deactivation. (Zones 35 and 36-C through -E)

The EDS automatic abort circuits in the CSM are activated automatically at lift-off and deactivated automatically at LET jettison. Switches are provided on the MDC to deactivate the entire automatic abort capability or the TWO ENGINES OUT and EXCESSIVE RATES portions of the system independently. Deactivation of the two automatic abort parameters are also accomplished automatically in the IU just prior to inboard engine cutoff (IECO) as a backup to the manual deactivation by the flight crew.

SEQ

2.9.4.5.2 Launch Vehicle Status.

The electrical circuits that provide illumination power and control the LV status lights are in the IU. The LV RATE light, zones 24 and 25, will illuminate when LV roll, pitch, or yaw rates are in excess of predetermined limits. To indicate loss of attitude reference in the IU guidance unit, the red LV GUID and the LV RATE lights illuminate during first stage boost, then only LV GUID will illuminate. The yellow LV ENGINES lights illuminate when a respective LV operating engine is developing less than the required thrust output. The engine lights provide four cues: (1) ignition, (2) cutoff, (3) engine below thrust, and (4) physical stage separation. A red SII SEP light will illuminate at SII first-plane separation and is extinguished at second-place separation on vehicles launched with an S-V booster. Each of these status lights has an A and B redundant circuit operation with separate lamps in each circuit.

2.9.4.5.3 Abort Request Light. (Zone 31-E)

The ABORT light, is a red lamp assembly containing four bulbs that provide high-intensity illumination. Two bulbs are in system A, and two are in system B. The ABORT light is illuminated if an abort is requested by launch control center for a pad abort or an abort during lift-off via up-data link (UDL). The ABORT light can be illuminated after lift-off by the range safety officer transmitting a DESTRUCT ARM COMMAND, zone 33-E. An abort may also be requested via UDL from the manned space flight network (MSFN). The ABORT lamps, systems A and/or B may be extinguished by UDL reset commands; however, the flight crew can extinguish the lamps in system B only with the UP TELEMETRY COMMAND switch (S39), zones 27 through 30-E and -F.

2.9.4.5.4 Launch Vehicle Tank Pressure Monitor.

A time-shared display is used to indicate LV propellant tank pressures and SPS gimbal position, zones 30 and 31-E and -F. The LV/SPS IND selector switch (S53), zone 32-F, is used to select the parameters to be displayed. Meter movement selector switches and operational power circuits are included in section 2.3.

2.9.4.6 LV Auto Abort Logic.

The EDS will automatically initiate an abort signal when two or more first stage engines are out, zone 34-D, or when LV excessive rates are sensed by gyros in the IU, zones 34-C and -D. These abort signals will energize an ABORT BUS which will energize AUTO ABORT INITIATE relays, zones 33-C and -D. When the AUTO ABORT INITIATE relays in the IU are energized, the auto abort voting relays in the MESC are deenergized, paragraph 2.9.4.7. Three matrices of relay contacts, each of which constitutes 2 of 3 voting logic, are in the abort signals to the ABORT BUS and the functions of these relays are automatic abort deactivate, paragraph 2.9.4.5.1, zones 34-C and -D. The source of power to energize the AUTO ABORT DEACTIVATE relays is in the IU, zones 36-C, -D and -E, and may be controlled by switches in the CM. If the 2 ENG OUT switch (S64), zone 36-E, is placed in the OFF position, the 2 ENG OUT AUTO ABORT DEACTIVATE relays will be energized and the 2 engines out signal from the first stage will be inhibited from initiating an automatic abort. If the LV RATES switch (S65), zone 36-D, is placed in the OFF position, the EXCESSIVE RATES AUTO ABORT DEACTIVATE relays will be energized and the abort signals from the IU gyros will be inhibited from initiating an automatic abort.

2.9.4.7 MESC Auto Abort Voting Logic.

When the EDS bus changeover circuits are energized (paragraph 2.9.4.3), three hot wire loops are established between the CM

and LV. Power from the EDS buses 1, 2, and 3 energize the EDS ABORT relays 1, 2, and 3 in the MESC, zones 31 and 32-A and -B. The three legs of EDS bus power are through three matrices of relay contacts of the AUTO ABORT INITIATE relays (paragraph 2.9.4.6), zones 33-A through -D. When an automatic abort is initiated in the IU the EDS ABORT relays in the MESC are de-energized, this constitutes three abort votes in the MESC. The MESC A 2 of 3 voting logic is illustrated with matrices of EDS ABORT relay contacts, zones 30 and 31-A. The automatic abort signal through this voting logic is described in paragraph 2.9.4.14.

2.9.4.7.1 Launch Escape Tower Physically Attached.

One of the requirements for the automatic abort circuits to be enabled is to have the LET physically attached to the CM (figure 2.9-7). Another requirement is logic power to the circuits associated with tower attachment. The power may be from the EDS bus changeover circuits (paragraph 2.9.4.3) or from the MESC LOGIC bus (paragraph 2.9.4.1.1). The LET PHYSICAL SEPARATION MONITOR relays, zone 25-F, have ground wires routed through the tower legs. One pair of contacts of these relays is in the holding circuit to the AUTO ABORT ENABLE relays (paragraph 2.9.4.7.2), zone 31-D. An automatic abort is impossible after the tower has been jettisoned because the AUTO ABORT ENABLE relays will have been de-energized.

2.9.4.7.2 Auto Abort Enable.

The last requirement for an abort initiate signal to be automated is to have the MESC automatic abort circuits enabled. If the EDS switch (S67), zone 29-D, is in the AUTO position, a lift-off signal (paragraph 2.9.4.4) from the IU will enable these circuits. Relay logic in the automatic abort enable circuits are designed to establish holding circuits on battery bus power. These holding circuits are required to maintain the automatic abort circuits in an enabled state since the lift-off signals are discontinued from the IU at IECO. For the holding circuits to be established, power must be made available from the SECS LOGIC CB3 (paragraph 2.9.4.1.1), and the LET must be physically attached and electrically mated (paragraph 2.9.4.7.1). Normally closed contacts of the system B AUTO ABORT ENABLE relays are installed in the negative return of the red NO AUTO ABORT light. Therefore, when the automatic abort circuits are enabled, the red NO AUTO ABORT light will not be illuminated. The LIFT OFF and NO AUTO ABORT lights are combined in an illuminated pushbutton (IPB) which is the only illuminated switch in this group. Illumination of the red light would be the indication that complete enabling of both systems had not been established. If the white LIFT OFF light should not illuminate at lift-off, the most probable cause would be a failure of both lift-off signals in the IU. In this event, the IPB should be depressed

momentarily to allow the automatic abort circuits to be enabled from the alternate battery bus power source; neither of the lights would be illuminated in this instance.

2.9.4.8 Normal Ascent.

Figure 2.9-21 illustrates the normal ascent for S-V launch vehicles.

A T + 42 seconds, the ABORT SYSTEM PRPLNT switch (S63), zone 20-B, will be changed from the DUMP AUTO position to the RCS CMD position. The DUMP AUTO contacts of the switch are in series with contacts of the PROPELLANT DUMP AND PURGE DISABLE timer which was started at lift-off (paragraph 2.9.4.4). Additional information relative to this time delay and procedural switching is included in section 2.5, RCS and paragraph 2.9.4.14.5.

2.9.4.8.1 Angle of Attack Monitor. (Zones 35 through 37-E and -F)

A Q-ball (figure 2.9-22) mounted above the LES motors, provides an electrical signal input to the LV AOA/SPS P_c indicator and an electrical signal input to ground control via telemetry. The Q-ball has eight static ports for measuring ΔP which is a function of angle of attack. The pitch and yaw ΔP signals are electronically vector-summed in the Q-ball and displayed on the indicator. The indicator is monitored for the LV AOA

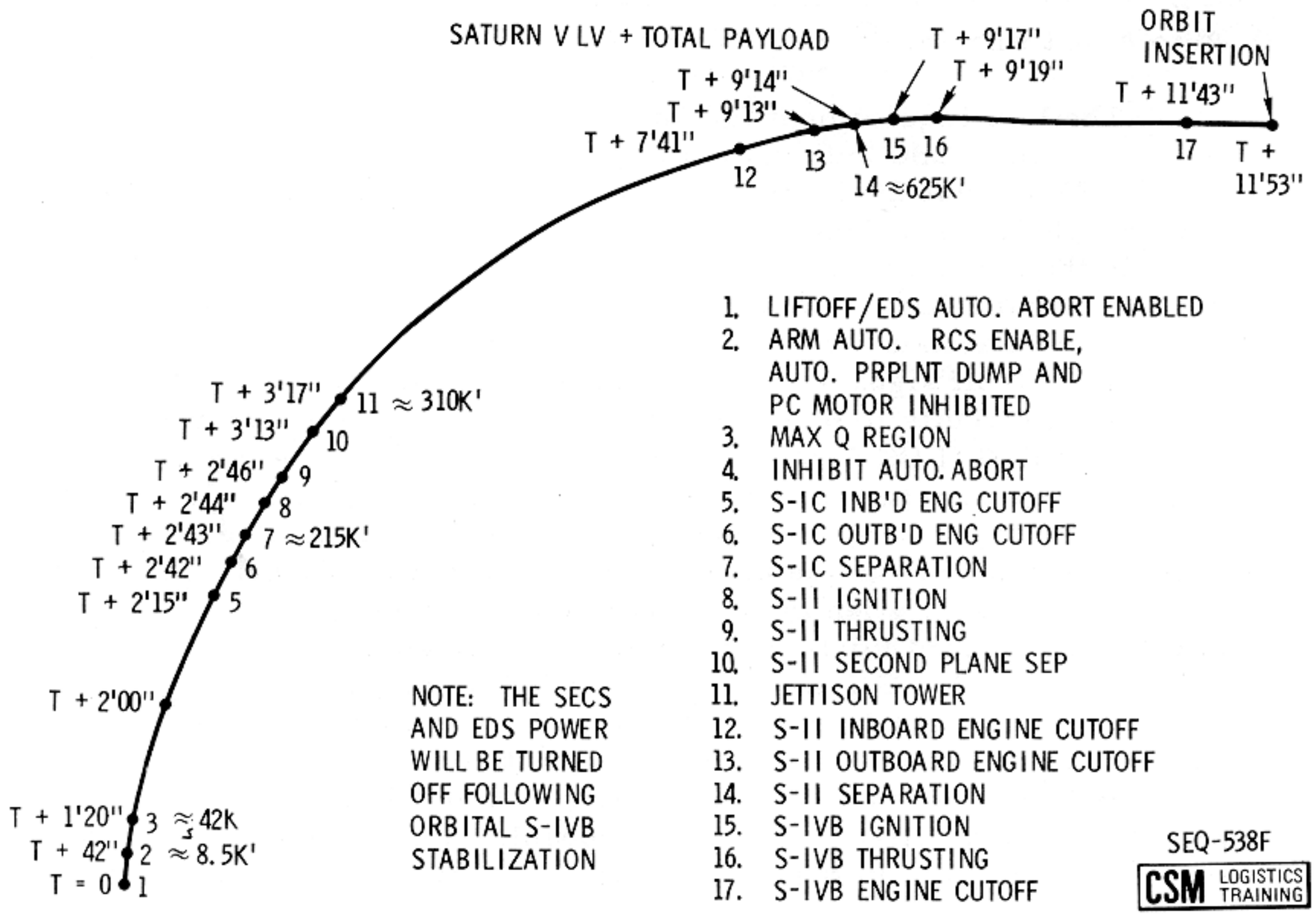

Figure 2.9-21. Event Profile, Normal Ascent S-V LV

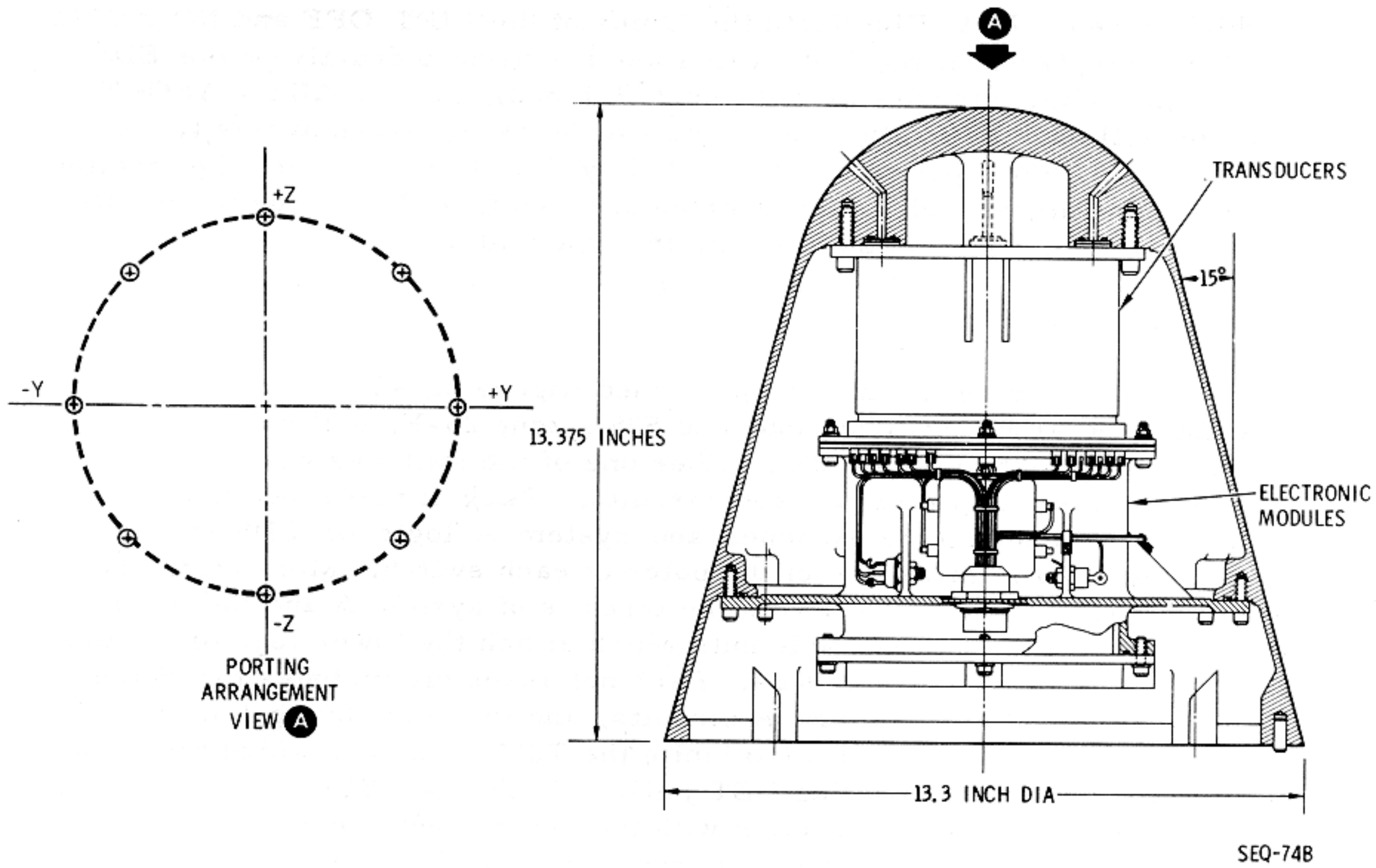

Figure 2.9-22. EDS Q Ball

function during ascent when the LV is at or near the max Q region. This is a time-shared instrument with the service propulsion system (SPS), and the 150-percent graduation is because of SPS start transients. Use of the scale during the LV AOA period will be as a trend indicator only with abort limits established in mission rules.

SEQ

2.9.4.8.2 EDS Automatic Abort Deactivate.

The entire automatic abort capability or a portion of the circuits may be deactivated by the flight crew prior to staging (paragraph 2.9.4.5.1). If the EDS switch (S67), zone 29-D, is switched to the OFF position, the entire EDS automatic abort capability will be deactivated (paragraph 2.9.4.7.2). If the 2 ENG OUT switch (S64) and/or LV RATES switch (S65) are switched to the OFF position, the appropriate automatic abort parameter will be deactivated (paragraph 2.9.4.6). Automated switching in the IU SWITCH SELECTOR, zone 35-E, will also deactivate the two automatic parameters as a part of the staging sequence.

2.9.4.8.3 Extinguish LIFT OFF and NO AUTO ABORT Lights.

Just before IECO, the LIFT OFF ENABLE INHIBIT relay contacts in the IU are opened, zones 34-A and -C. This interrupts EDS bus power

which is required to illuminate the lamps of the LIFT OFF and NO AUTO ABORT displays. If the EDS switch (S67) is used to deactivate the EDS automatic abort circuits (paragraph 2.9.4.8.2), the NO AUTO ABORT lamps will have been illuminated and will be extinguished at this time. When the EDS bus power is interrupted by this IU relay logic, the mission and event timers, which were started at lift-off, will continue to operate because of internal holding circuits in these units.

2.9.4.8.4 Launch Escape Tower Jettison

After staging, the LET is jettisoned (figure 2.9-23). Normally, both of the TWR JETT switches (S66 and S96), zone 26-F, will be used to initiate this function; however, either one of the switches will initiate systems A and B tower jettison circuits. Each of these switches, No. 1 and 2, are double pole switches and system A logic or EDS change-over power will enable one of the poles of each switch. Moreover, one pole of each switch will activate the circuits of system A and the other pole system B. The frangible nuts which attach the tower legs to the CM are illustrated in figure 2.9-24. Each nut assembly includes two detonators, one initiated by system A circuits, and the other by system B. The tower jettison circuits will also ignite the TJM. The cue which the flight crew will use when initiating LET jettison is the S-II SEP light. Utilization of the event timer in conjunction with the visual light cue will enable the crew to jettison the LET at the correct time. If the TJM should fail to

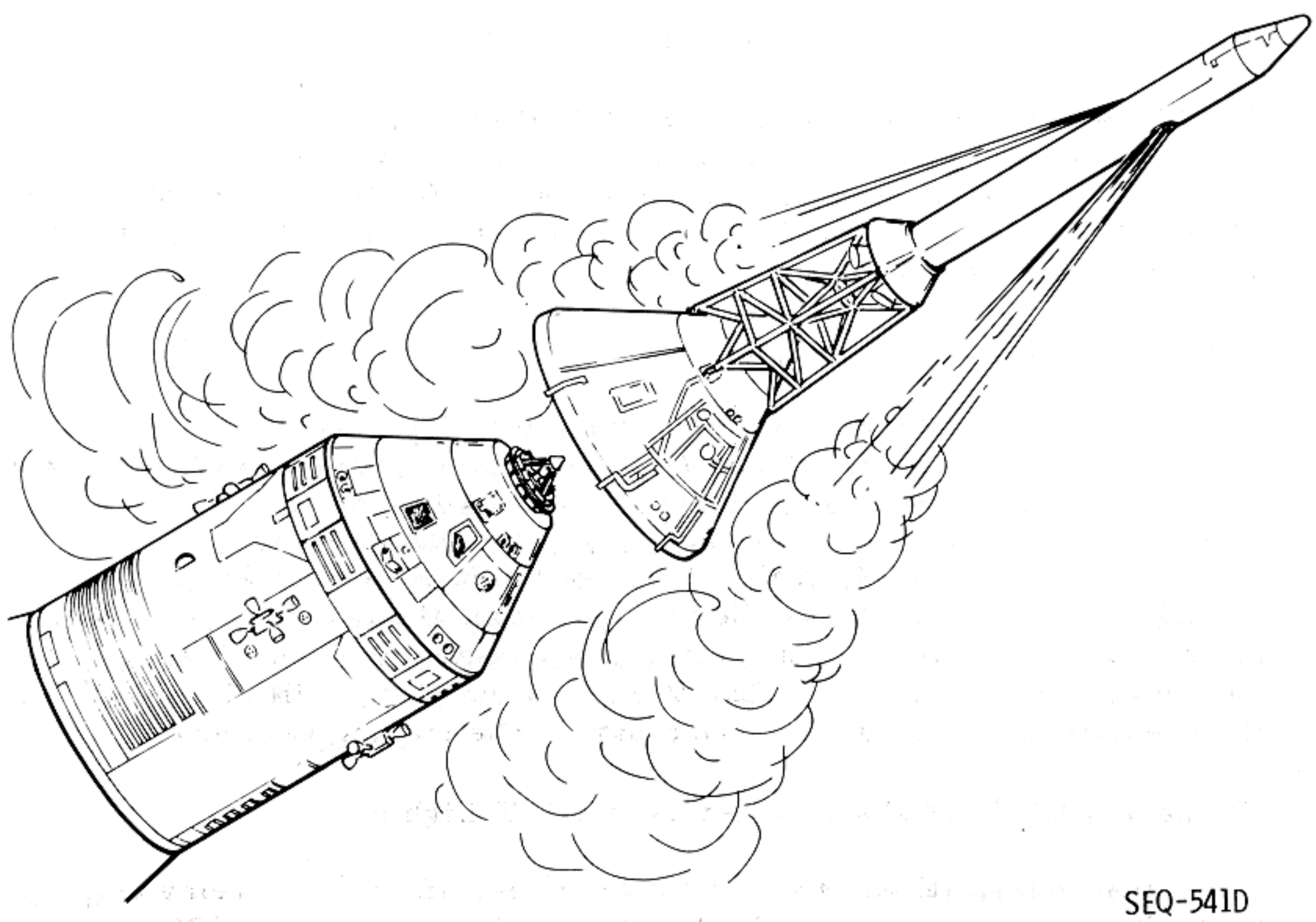

SEQ-541D

Figure 2.9-23. Normal Tower Jettison

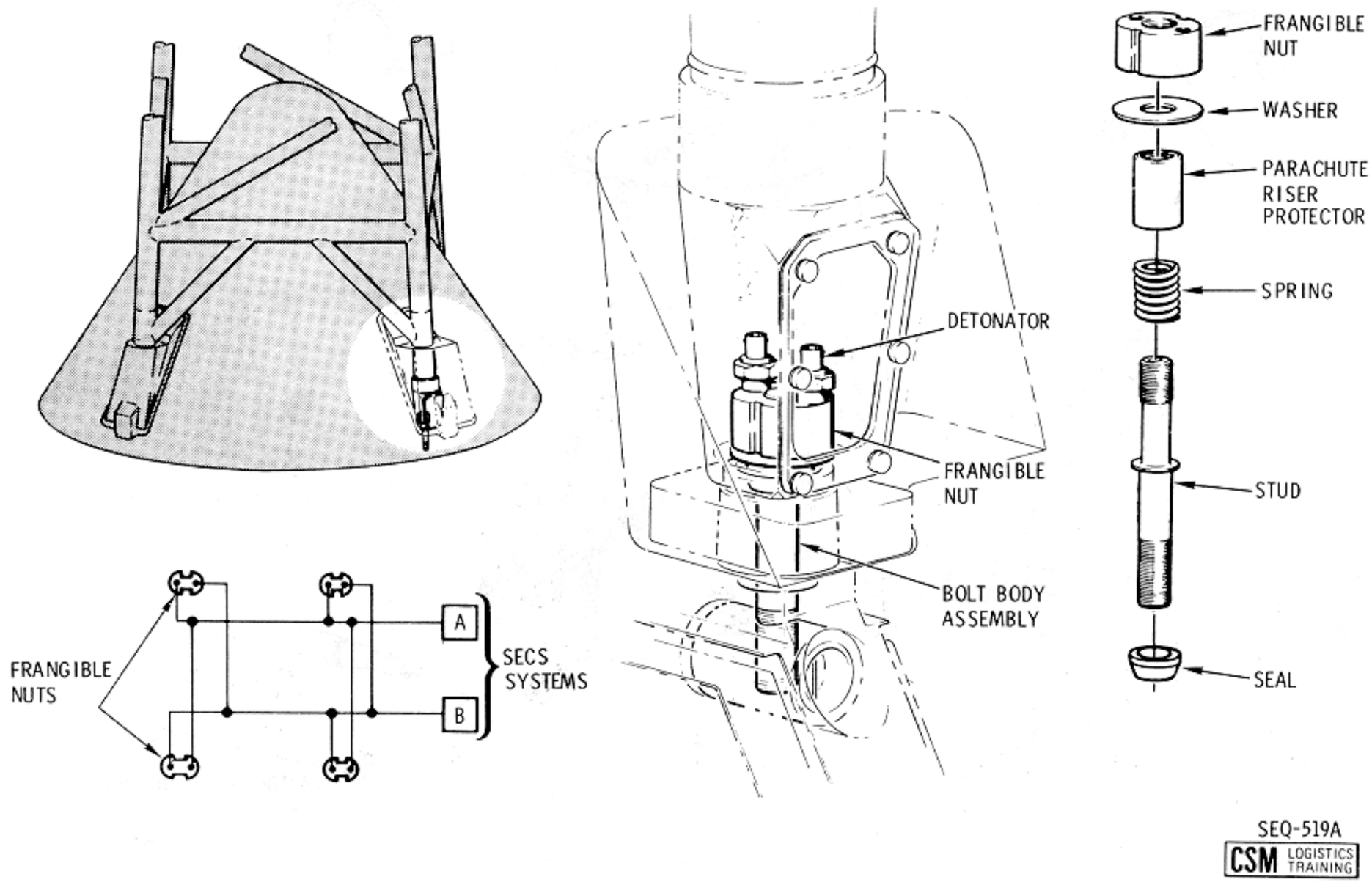

Figure 2.9-24. Tower Separation System

ignite, an alternate method may be used to jettison the LET. The LES MOTOR FIRE switch (S31), zone 19-C, will ignite the LEM which is flight-qualified to jettison the LET. If this alternative should be necessary, it is vital that the detonators of the frangible nuts shall have been initiated before the LES MOTOR FIRE switch is depressed. The TWR JETT switches are the only controls that will initiate the detonators of the frangible nuts.

SEQ

2.9.4.9 Separation of the Spacecraft From the Launch Vehicle.

The next maneuver that the sequential systems will be utilized to perform is CSM/LV separation (figure 2.9-25). Closing the CSM/LV SEP switch (S35), zone 10-B, will energize the CSM/LV SEPARATE relays, which will fire initiators of the explosive trains that sever and jettison the SLA panels. The same explosive train will separate the CSM/LV and LM/GSE umbilicals.

2.9.4.9.1 Enable Automated Control of the SM RCS.

The CSM-LV SEPARATE relay will, in addition to initiating the explosive train, energize the RCS ENABLE ARM relays, zone 8-A,

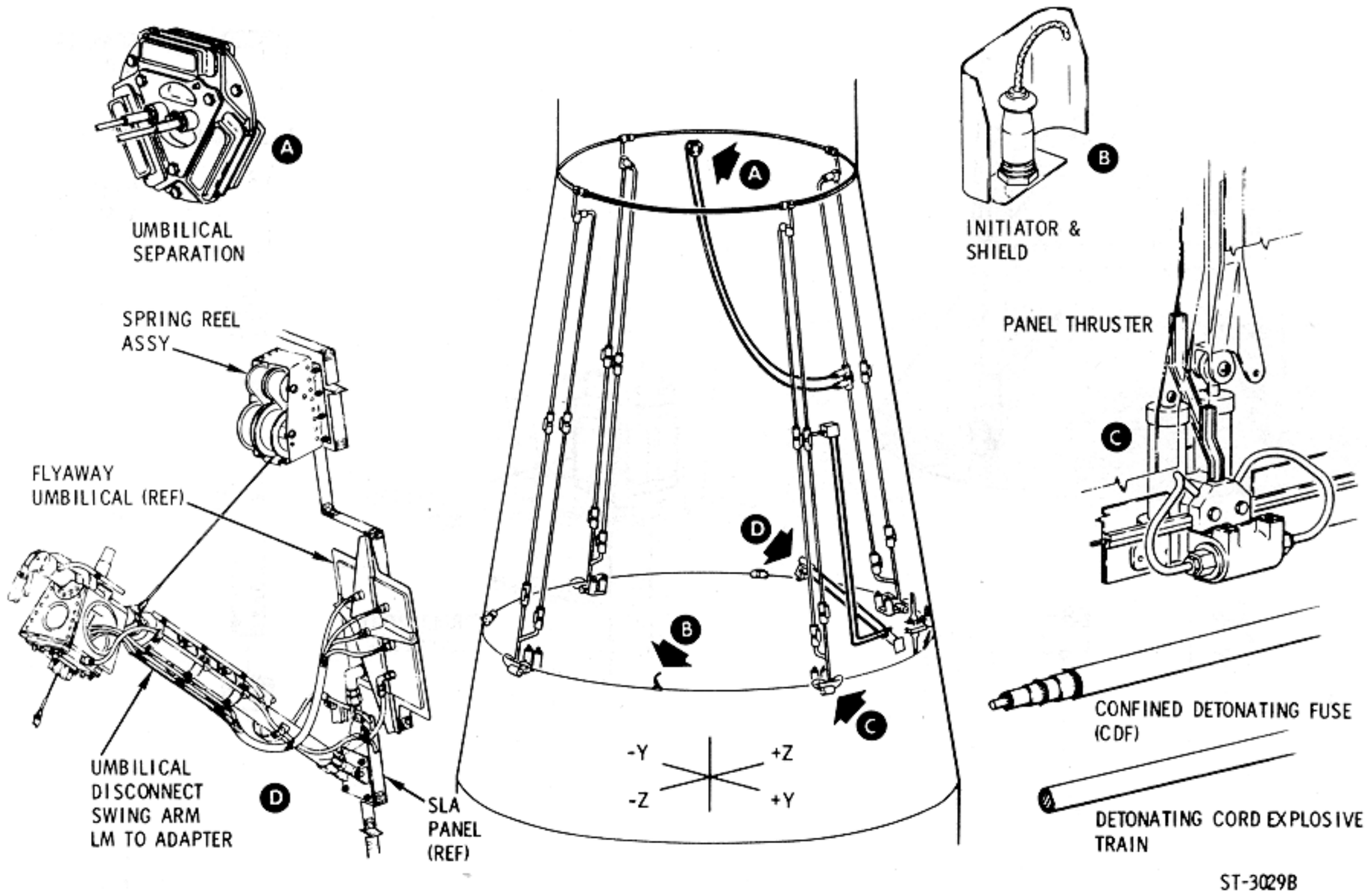

Figure 2.9-25. Adapter Separation System

which, in turn, will energize the latching coils of the RCS ENABLE relays, zone 7-A. This relay logic will enable the controller reaction jet on/off assembly which couples the SCS jet selection logic and SM RCS, section 2.5, RCS.

2.9.4.10 Docking Probe Retraction.

This system is designed for two retractions with backup for each. Since there are four retraction cylinders, however, four retractions are possible under ideal circumstances.

The DOCK PROBE RETRACT PRIM and/or SEC switches (S2 and S3), zones 13-E and -F, are armed when four conditions are satisfied. These are:

a. The appropriate buses are energized and the appropriate circuit breakers are closed, zones 15-E and -F.

b. The EXTEND/REL switch (S1), zones 14-E and -F, is in the RETRACT position.

c. The latch indicating switches in the docking ring latches are closed (system A and/or B as required).

d. The capture latches sensing switches are closed (probe head latched in LM drogue).

When these conditions are satisfied, the DOCK PROBE RETRACT switches may be utilized to energize the LM DOCKING PROBE RETRACT No. 1 and 2 relays as required. Contacts of these relays will fire the initiators and retraction will be executed.

2.9.4.11 Separation of LM From S-IVB.

Pyro power circuits to the LSSC include a circuit breaker which is described in paragraph 2.9.4.2.2. The S-IVB/LM SEP PYRO A circuit breaker (CB3), zone 39-F, must be closed to complete the system A LSSC pyro circuit. The LDEC is also required in this automation.

Closing the S-IVB/LM SEP switch (S108), zone 18-E, will start the following sequence:

a. The LM/SLA SEP (LM LEGS) relays of the LSSC, will be energized and their contacts will fire the initiators of the frangible links which retain the LM legs.

b. The nonlatching relay and the latching coils of the latching relay of the LM/SLA SEP INITIATE relays in the LSSC will be energized after a time delay of 30 milliseconds.

c. The LM/SLA SEP (GUILLOTINE) relays of the LSSC, will be energized after a time delay of 30 milliseconds.

Contacts of the LM/SLA SEP INITIATE relays will deadface LSSC pyro power which was utilized to fire the frangible links of the LM legs. Contacts of the system B LM/SLA SEP INITIATE relays are in the system A deadfacing circuits for series/parallel redundancy; system A contacts are utilized in system B (not illustrated) for the same reason.

LDEC pyro power fires the umbilical guillotine through contacts of the LM/SLA SEP INITIATE relays in the LDEC and the LM/SLA SEP (GUILLOTINE) relays in the LSSC. Deadfacing of LDEC pyro power is accomplished when the switch is allowed to return to its maintain position and the relay coils are de-energized. The contacts of the nonlatching relays will return to their initial state but the contacts of the latching relay will not revert to their initial positions.

SEQ

2.9.4.12 LM Docking Ring Separation.

Logic power through the momentary contacts of either of the CSM/LM FINAL SEP switches (S109 or S112), zone 26-D, will energize the LM DOCKING RING FINAL SEPARATION relays in the LDEC. These are the firing relays for the ordnance which severs the docking ring from the CM tunnel.

2.9.4.13 Nominal Pre-entry and Descent.

Arming the SECS is the first requirement of the sequential systems preparatory to a nominal entry and descent (paragraphs 2.9.4.1 and 2.9.4.2). If mission rules require a checkout of the CM RCS prior to CM/SM separation, it is vital that electrical control of the RCS be placed in the SM RCS configuration prior to initiating the separation (paragraph 2.9.4.13.2). Figure 2.9-26 illustrates a nominal pre-entry and descent profile.

2.9.4.13.1 CM/SM Separation Control.

When either of the CM/SM SEP switches (S110 or S111), zones 24-C and -D are closed, logic power will start the automated sequence of CM/SM separation. Each of these switches, No. 1 and 2, is a double-pole switch with one pole controlling system A components and the other pole controlling system B components. When either or both of these

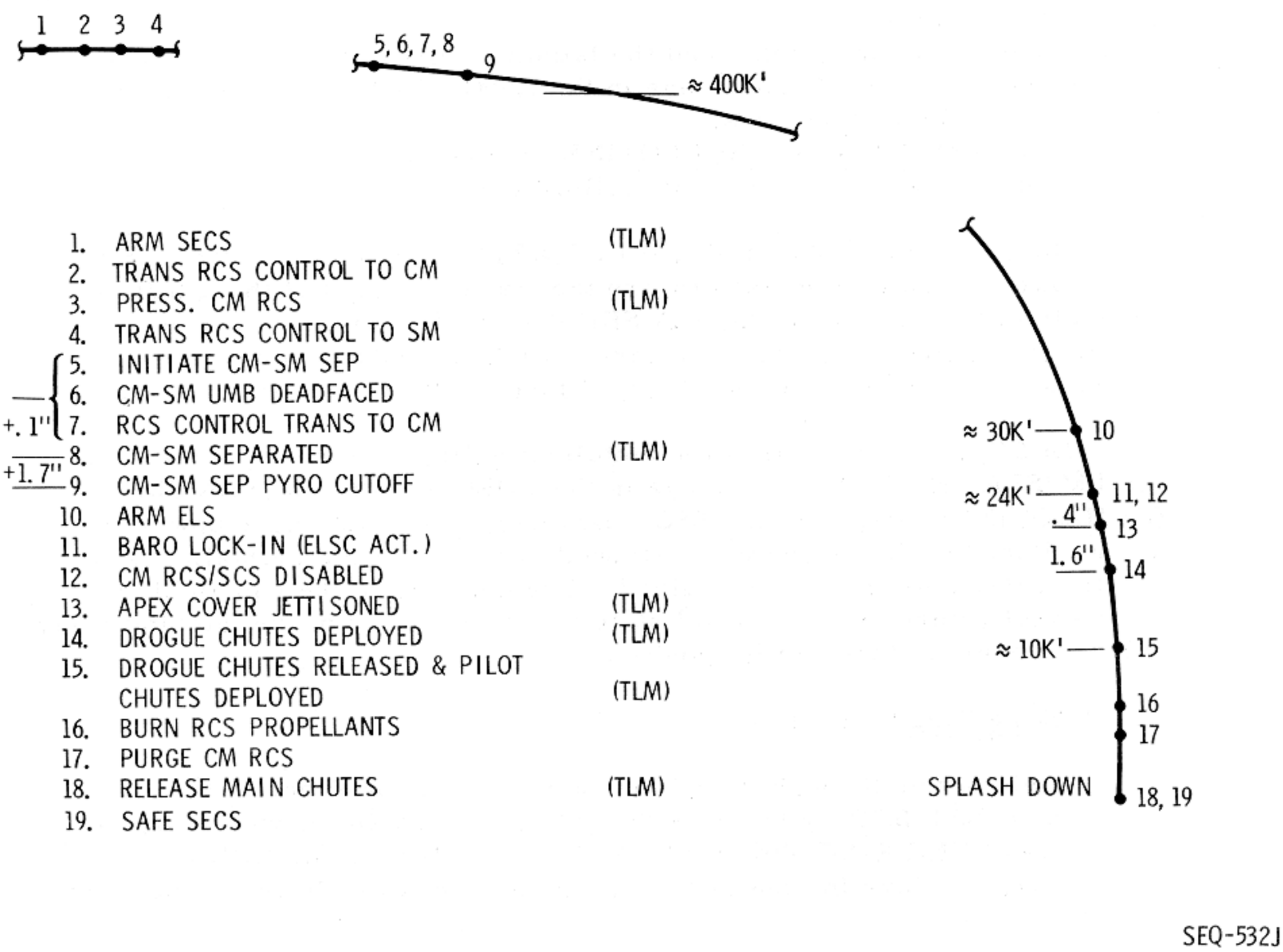

Figure 2.9-26. Event Profile, Nominal Pre-Entry and Descent

switches are utilized for CM/SM separation, they should be held closed for approximately 0.1 of a second to allow the time-delay relay logic to function properly (paragraph 2.9.4.13.5).

2.9.4.13.2 Jettisoning the SM. (Zones 19 through 22-E and -F)

A manually initiated CM/SM separation signal will start the SMJC with logic battery power through contacts of the RCSC motor switch (S1), zone 23-E. The motor switch must be in the SM control position for the start signal to activate the SMJC (paragraph 2.9.4.13). Latching relays are utilized to couple fuel cell electrical power to the SMJC and to energize the manual coils of the SM RCS -X engines. Fuel cell power to the SMJC is through contacts of motor switches, zones 23-E and -F, which are described in Section 2.6, Electrical Power. The control circuits in the SMJC constitute a crossover network; either system A or B will energize the manual coils of both of the SM RCS redundant engine systems. The +roll engines will be started 2.0 seconds after the SMJC is started and will operate for 5.5 seconds. The -X translation engines will continue to burn until the propellants are depleted or the fuel cells are expended, whichever occurs first.

2.9.4.13.3 Deadfacing the CM-SM Umbilical.

Closure of either of the CM/SM SEP switches will energize the CM/SM DEADFACE relays to the MESC, zone 23-C. These relays are utilized to initiate the ordnance devices of the CM-SM electrical circuit interrupter (figure 2.9-27) and the SM circuit interrupter (figure 2.9-28). These relays may be considered as pilot relays to the automation of other CM-SM separation functions which includes interface with the CM-RCS.

2.9.4.13.4 Separation of the CM From the SM.

When the CM-SM SEPARATE relays in the MESC are energized after a time delay of 0.1 second, ordnance devices required for CM-SM separation are initiated. These are the guillotine blades of the CM-SM umbilical assembly (figure 2.9-29) and three tension ties between the CM and SM structures (figure 2.9-30). The time delay is required in this circuit so that the guillotine blades will cut wires which were deadfaced (paragraph 2.9.4.13.3).

2.9.4.13.5 Pyro Cutout.

The pyro cutout circuits are incorporated to eliminate the possibility of draining pyro power through wiring which may have one or two strands shorted by umbilical blades, or any other high resistance short. Fusistors afford protection against "dead shorts" (figure 2.9-18 and paragraph 2.9.4). The PYRO CUTOUT relays, zone 20-B, are energized 1.7 seconds after the CM-SM SEPARATE relays. Contacts

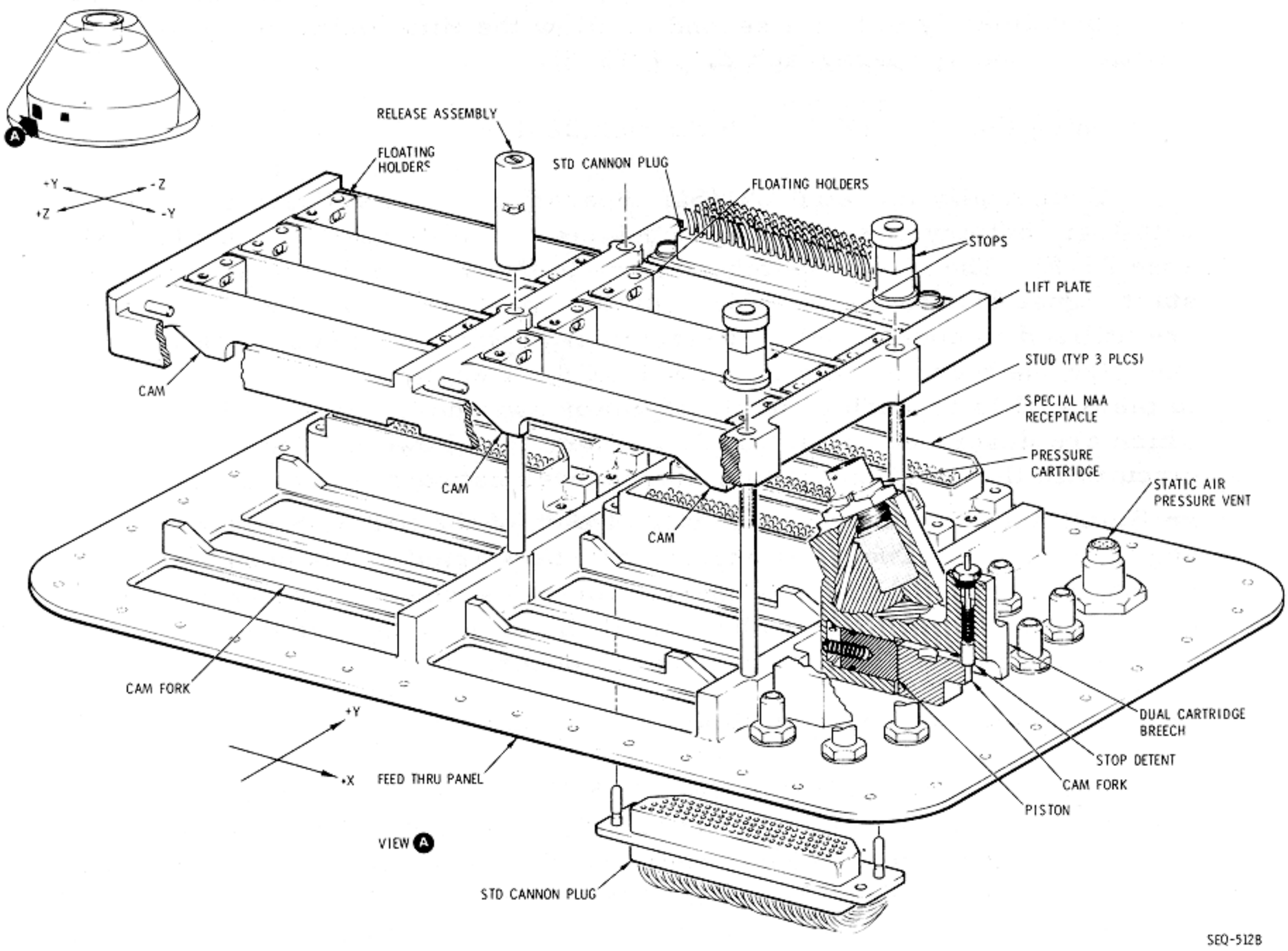

Figure 2.9-27. CM-SM Electrical Circuit Interrupter

of the PYRO CUTOUT relays are in the logic circuits to the CM-SM DEADFACE relays, zone 23-D. Contacts of the PYRO CUTOUT relays are also in the pyro circuits to the initiators that are expended in the separation sequence, zones 20 through 23-C and -D. This relay logic is an arc suppression system since electrical energy is removed from initiator firing relay contacts at the time they return to their normal state. When the CM/SM SEP switch is released it will return to its normally open state and all relays in this logic, including the PYRO CUTOUT relays, will be de-energized.

2.9.4.13.6 CM RCS Interface.

Any time a CM-SM separation signal is initiated in the MESC, a signal is automated for the initiation of two CM RCS functions. These are:

a. Fluid systems pressurization, zones 21 through 23-A and -B. The system 1 CM-RCS PRESS relay logic provides firing circuits to

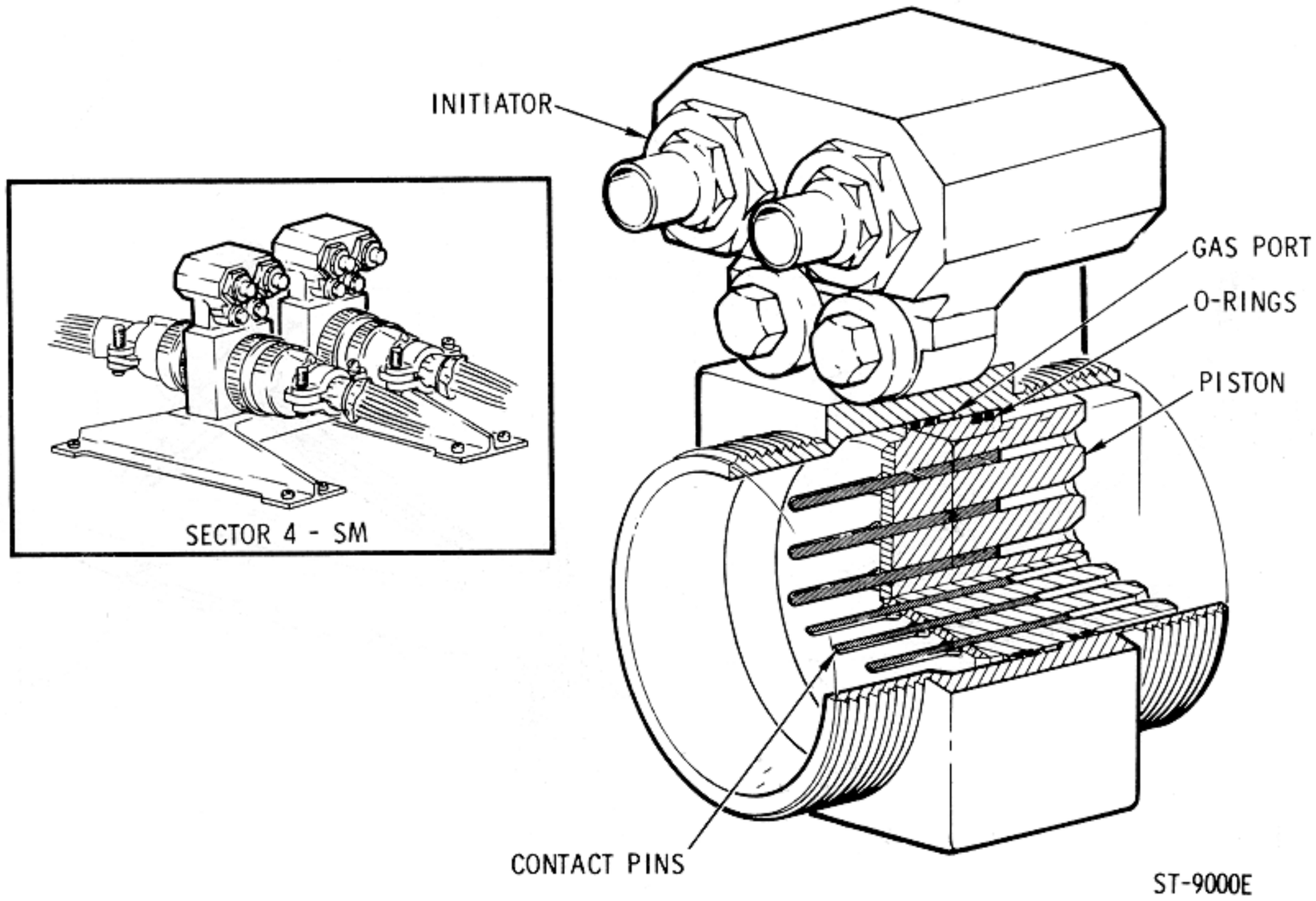

Figure 2.9-28. SM Circuit Interrupter

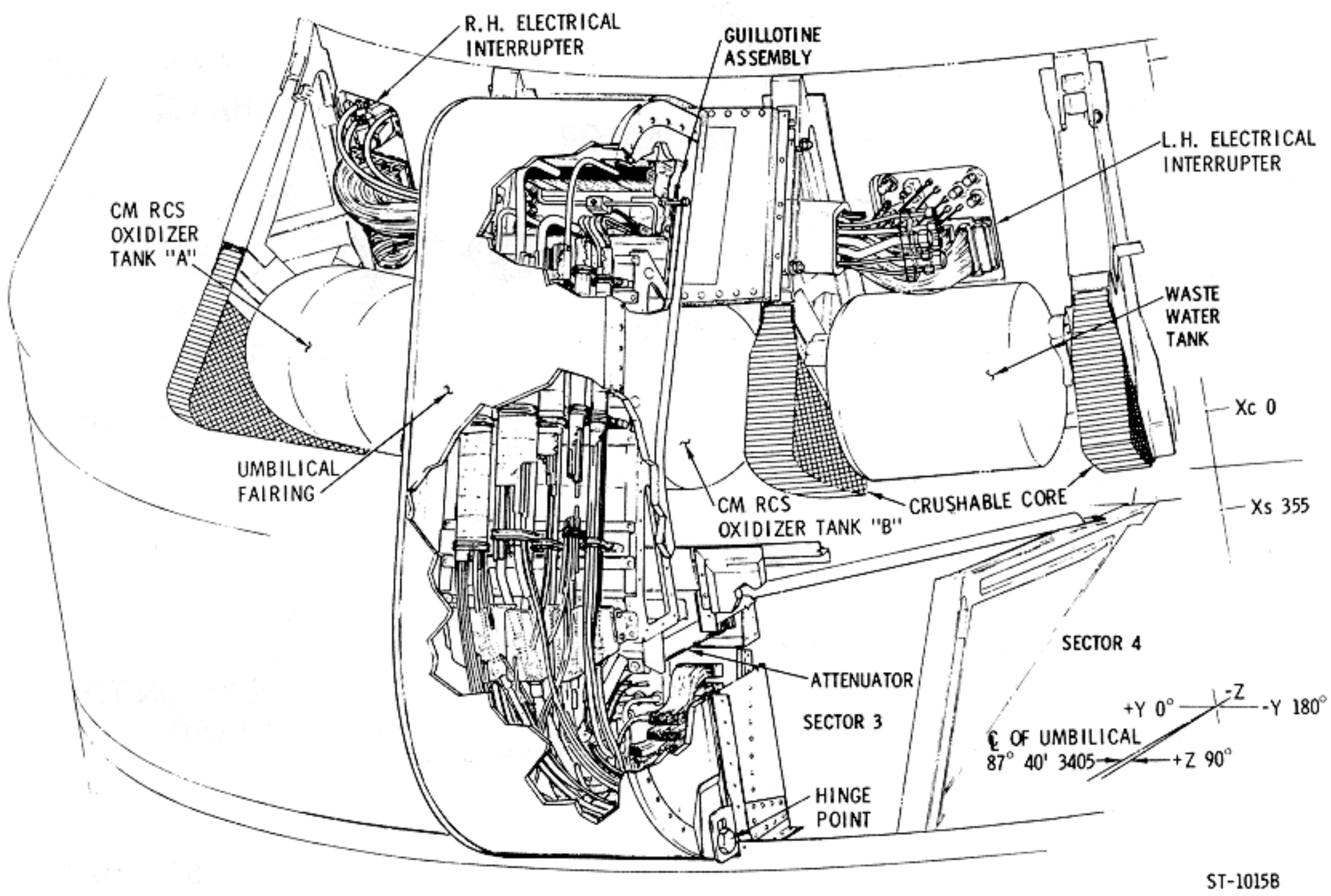

Figure 2.9-29. CM-SM Umbilical Assembly

SEQ

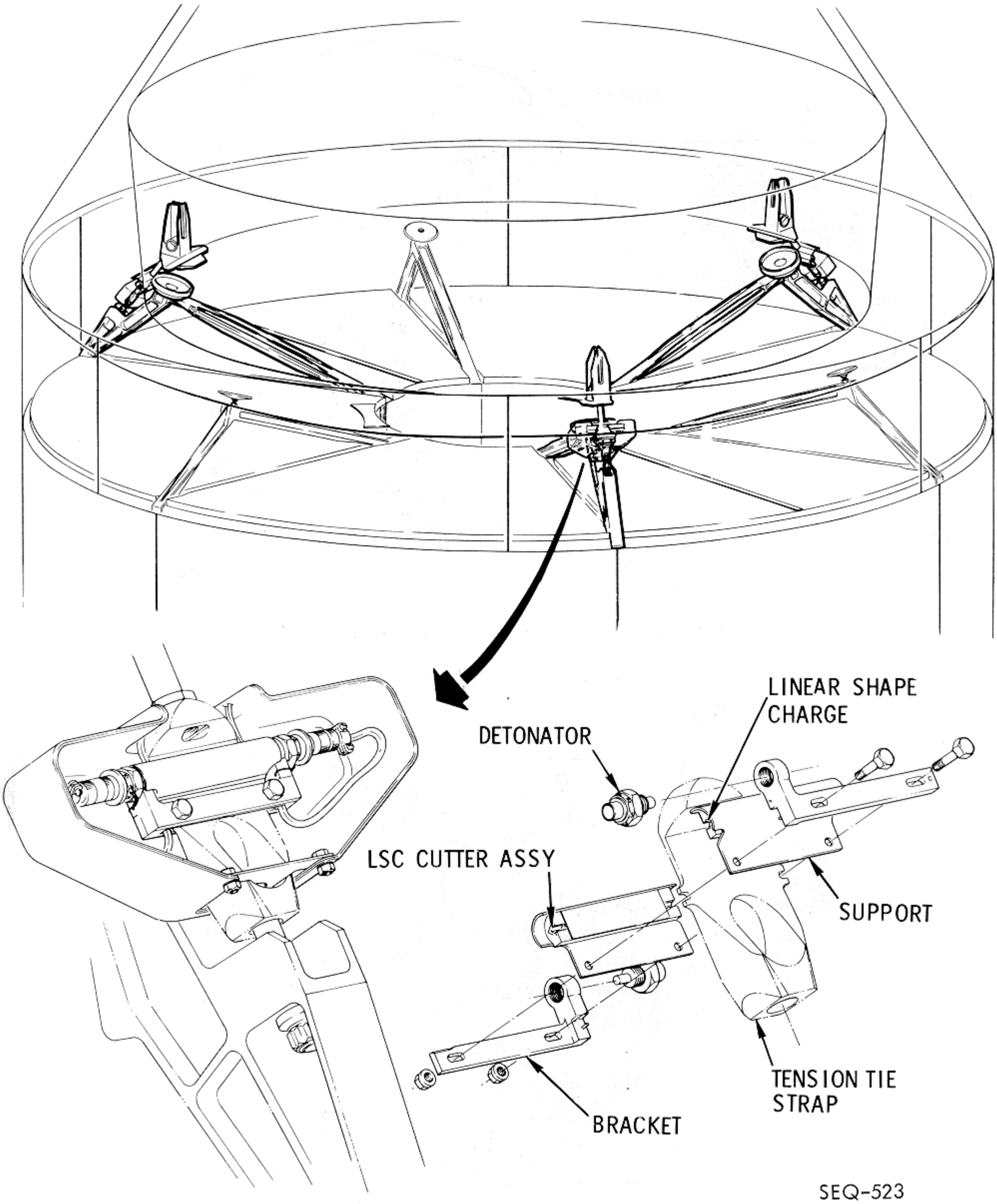

Figure 2.9-30. CM-SM Separation System

one of the HELIUM SQUIB ISOLATION valves in each of the redundant fluid systems of the CM RCS (Section 2.5, RCS).

b. Transfer electrical control from the SM RCS to the CM RCS, zones 18 through 20-A and -B. RCS CM-SM TRANSFER relay logic in the RCSC will drive the transfer motor switch to the SM position. Moreover, contacts of the motor switch are utilized to deadface the SMJC start signal, zone 23-E. There is a time delay of approximately 50 milliseconds in this deadfacing function which is explained as the time it takes the motor switch contacts to change state.

2.9.4.13.7 Main Bus Tie.

Relay logic of the RCSC, zones 11 through 13-C and -D, will couple ENTRY AND POSTLANDING batteries A, B and C to the main buses providing certain circuit breakers and switches of the electrical power system (Section 2.6) are in the correct position for this automation.

2.9.4.13.8 Arm ELSC.

Closure of the ELS LOGIC switch (S44), zone 10-D, will complete logic power circuits to redundant transistorized switches in the MESC. These solid state switches function as a pair of AND gates, each of which requires two inputs to emit. One of the inputs is satisfied when the logic power circuits are completed.

2.9.4.13.9 Activate ELSC.

Logic power circuits to the ELSC, including ground returns for the components in this controller, are not completed until the ELSC ACTIVATE relays in the MESC are energized, zone 8-C. The solid state switches (paragraph 2.9.4.13.8) control the logic power required to energize these relays. Assuming that the ELS switch (S63), zone 8-E, is in the AUTO position, closure of the 24,000 FT BARO SWITCHES will satisfy the second input to the solid state switches. Logic power in this instance is derived from a point between the ELS LOGIC switch and the solid state switches. It is wired, through a resistor, to a point between the redundant baro switches. Both baro switches will be closed at the same time, and the reduced logic power, because of the resistor, will be sufficient to trigger the solid state switches; however, the reduced logic power is not sufficient to energize relay coils of the ELSC. When the ELSC ACTIVATE relays are energized, another crossover network is established; system B relay logic will establish holding circuits to the system A relays; moreover, system B relay logic can energize system A relays.

SEQ

2.9.4.13.10 24,000 ft Baro Switch Lock Up.

In addition to activating the ELSC (paragraph 2.9.4.13.9), closure of the 24,000 FT BARO SWITCHES will energize the 24,000 FT LOCK

UP relay in the ELSC, zone 7-D. This relay logic, together with the system B counterpart, will establish logic power holding circuits which bypass the 24,000 FT BARO SWITCHES.

2.9.4.13.11 Disable CM RCS/SCS.

A signal is relayed to the unlatching (disable) coils of the RCS/SCS ENABLE relay, zone 7-A, when the ELSC is activated (paragraph 2.9.4.13.9). This relay logic disables the controller reaction jet on/off assembly (Section 2.5, RCS).

2.9.4.13.12 Apex Cover Jettison.

When the ELSC has been activated (paragraph 2.9.4.13.9), the first function that will be automated is apex cover jettison (figure 2.9-31).

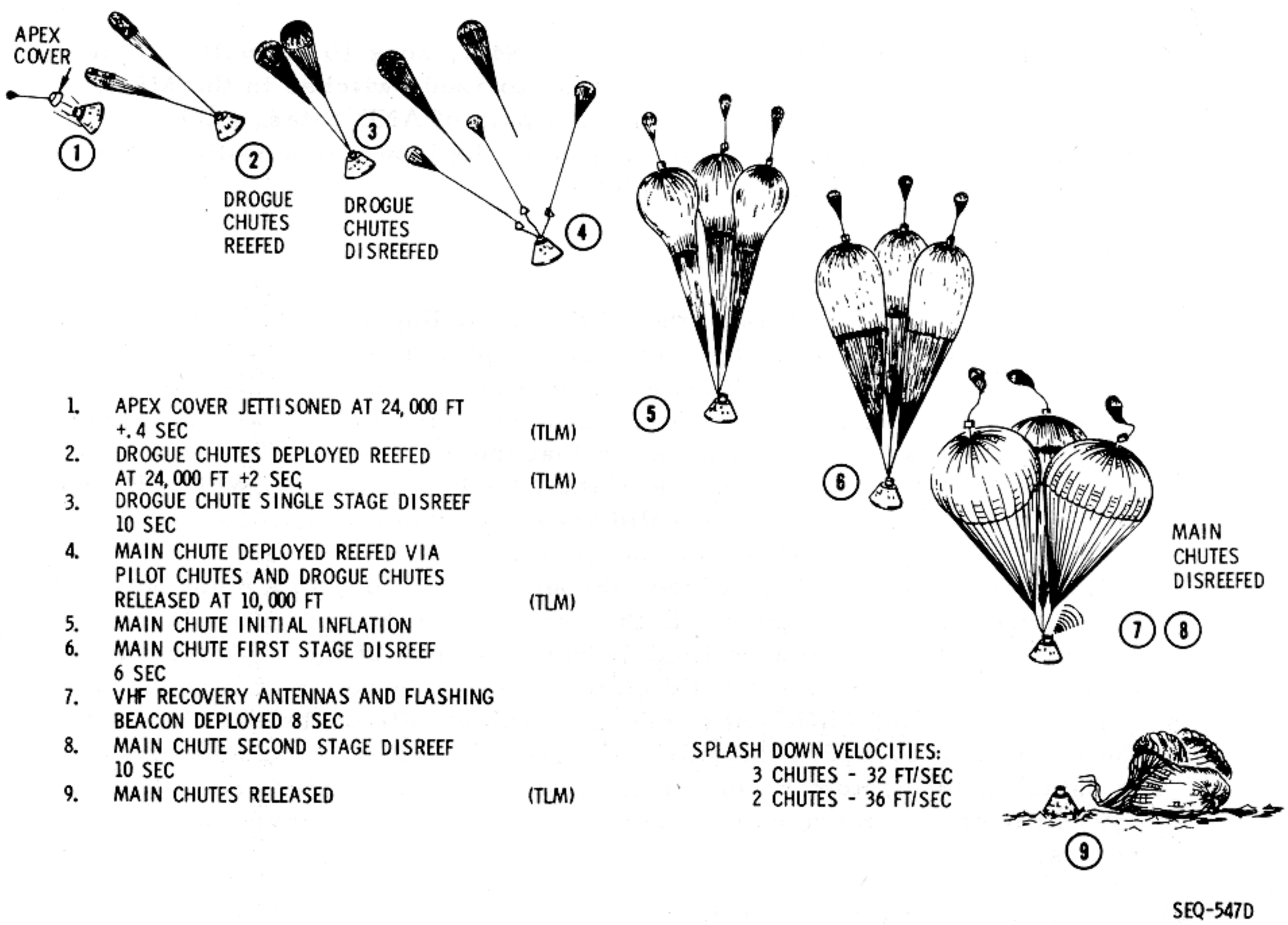

Figure 2.9-31. Earth Landing System, Normal Sequence

The APEX COVER JETTISON relays in the MESC are energized after a time delay of 0.4 second, zones 5 and 6-E. The holding circuits of these firing relays are one of the numerous crossover networks described in paragraph 2.9.4. The ordnance devices which are initiated in this function are described in paragraph 2.9.2.7. In addition to initiating the ordnance devices, this relay logic will also arm lanyard-actuated switches, zone 5-F, which are used to deploy the apex cover drag parachute. The lanyard pulls holding pins from the switches which, because of spring loading, will close circuits. Closure of these switches will energize the DRAG PARACHUTE DEPLOY relays in the MESC which initiate the drag parachute mortar.

2.9.4.13.13 Deployment of Drogue Parachutes.

The DROGUE IGNITER relays in the ELSC and PCVB, zones 4 and 5-D, are energized by ELSC ACTIVATE relay logic (paragraph 2.9.4.13.9) after a time delay of 2 seconds. Another crossover is established in this relay logic wherein the systems A and B PCVB relays cross-couple each other with holding circuits. Moreover, each system initiates ordnance devices of both systems.

2.9.4.13.14 Deployment of Main Parachutes and Release of Drogues.

Closure of the 10,000 FT BARO SWITCHES, zone 6-C, will energize the PILOT CHUTES AND DROGUE RELEASE relays in the ELSC and the PCVB. The PCVB relays in this logic are again cross-coupled, systems A and B, into crossover holding circuits. The ordnance initiator circuits are also arranged into a crossover network.

2.9.4.13.15 Burning of the CM RCS Propellants.

Switches in the CM RCS, zones 40-C and -D, are used to energize the direct coils of ten CM RCS jets, zones 15 and 16-A. The correct utilization of these switches is described in Section 2.5, RCS.

SEQ

2.9.4.13.16 Release of Main Parachutes.

Closure of the MAIN RELEASE switch (S71), zones 4 and 5-C, will energize the MAIN CHUTE RELEASE relays in the PCVB. These relays are used to initiate ordnance which will drive cutter chisels through the main parachute risers (figure 2.9-32).

2.9.4.14 Aborts.

Abort signals may be initiated manually by rotating the commander's translation hand control counterclockwise into a detent. Two cam-operated micro switches, zone 31-B, are included in the control. Batt. power through these switches will energize the BOOSTER CUTOFF AND LES OR SPS ABORT START RELAYS in the MESC, zone 29-A.

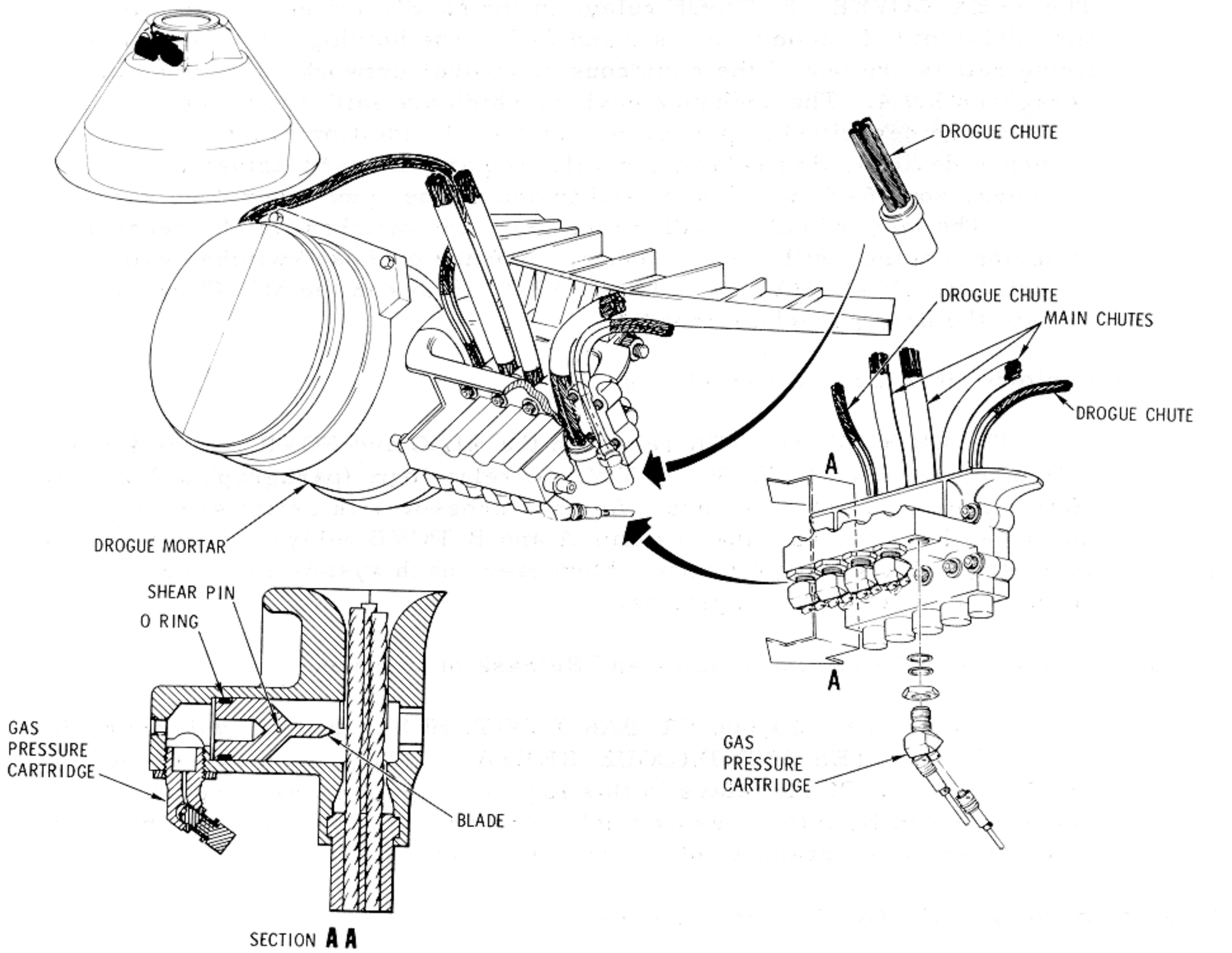

Figure 2.9-32. Parachute Disconnect (Flower Pot)

These relays may also be energized by an EDS automatic abort signal (paragraph 2.9.4.7) through 30-millisecond time delays. The reason for the time delays is to insure against spurious signals initiating an abort. EDS bus changeover power (paragraph 2.9.4.3) is utilized to energize the BOOSTER CUTOFF AND LES OR SPS ABORT START relays in the event of an EDS automatic abort. Any abort signal will automate two functions which are common to all abort sequences. These are:

a. BECO, zones 27 and 28-A and -B, is inhibited by IU relay logic until T + 30 seconds in the S-V LV configuration because of range safety requirements.

b. Reset and start the commander's event timer, zone 27-D. It is necessary for the EVENT TIMER START switch (S56), zone 32-C, to be in the CENTER ON position for this function to be automated.

2.9.4.14.1 Abort Start. (Zones 27 and 28-C and -D)

Two pairs of LET PHYSICAL SEPARATION MONITOR relay contacts (paragraph 2.9.4.7.1) are in the abort start relay logic. One pair is normally closed and the other is normally open. The state of these contacts at the time an abort is initiated will determine whether an LES or SPS abort is automated in the sequential systems. When the BOOSTER CUTOFF AND LES OR SPS ABORT START relays are energized (paragraph 2.9.4.14), the LES ABORT relays may or may not be energized; if they are energized, an LES abort will be started if not, an SPS abort will be started.

2.9.4.14.2 LES Abort Start.

Initially the sequential events of all LES aborts are identical. In addition to the functions that are common to all aborts (paragraph 2.9.4.14), separation of the CM from the SM is automated. The automated CM/SM separation sequence is the same as the manually initiated separation sequence described under nominal pre-entry, entry, and descent (paragraphs 2.9.4.13 through 2.9.4.13.7) with two exceptions which are:

a. The SMJC is not started when the separation sequence is started by a LES abort signal, zone 24-D.

b. In an LES ABORT the CM/SM separation sequence includes the firing of the LEM, zones 14 through 21-C.

2.9.4.14.3 Mode 1A Abort.

A mode 1A abort (figure 2.9-33) is initiated prior to the expiration of the PROPELLANT DUMP AND PURGE DISABLE TIMER (TD1) in the RCSC, zone 18-B. This time-delay relay logic is started at lift-off (paragraph 2.9.4.4) providing two conditions are satisfied. These are:

a. The RCSC motor switch (S1), zone 19-A, must be in the SM RCS control position (as illustrated).

b. The CM RCS LOGIC switch (S46), zone 40-D, must be in the CM RCS LOGIC position.

A pair of latching contacts, which are closed when the timer is reset by GSE, are in series with the PRPLNT DUMP AUTO contacts of the ABORT SYSTEM PRPLNT switch (S63), zone 20-B. When this switch is in the PRPLNT DUMP AUTO position, and before the timer contacts are opened, the requirements peculiar to a mode 1A abort may be automated. These are:

a. The PCM is fired by the same relay logic that ignites the LEM, zone 19-D. Logic power for energizing the PCM firing relays is derived through the closed contacts of the PROPELLANT DUMP AND PURGE DISABLE timer, zone 19-B.

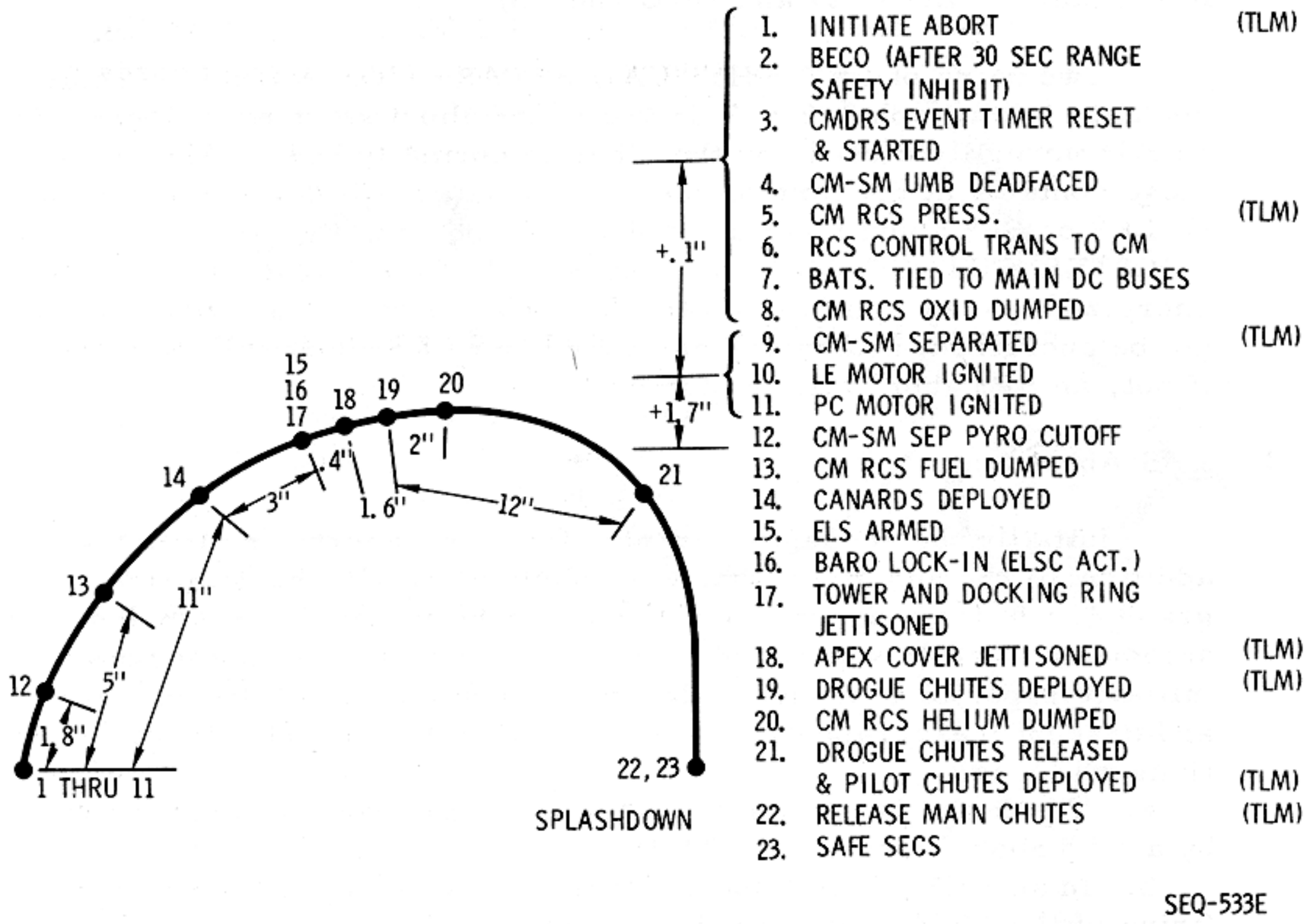

Figure 2.9-33. Event Profile, Mode 1A Abort

b. The OXIDIZER DUMP RELAYS, zone 17-B, are energized immediately with an abort initiate signal resulting in four CM RCS functions: (1) closure of the PROPELLANT SHUTOFF valves, zone 14-A; (2) energization of the INTERCONNECT AND PROPELLANT BURN relays, zones 16 and 17-A; (3) initiation of the OXID PUMP squib valves, zone 13-B; (4) initiation of the HELIUM and OXID INTERCONNECT squib valves, zones 13 and 14-A. The FUEL INTERCONNECT squib valve is initiated by the B system relay logic of the SECS.

c. Five seconds after the abort initiate signal, the FUEL DUMP squib valve, zone 14-B, is initiated by time-delay relay logic in the RCSC, zone 16-B.

d. Thirteen seconds later, or 18 seconds after the abort initiate signal, the FUEL AND OXID BYPASS RELAYS are energized, zone 15-B. This time-delay relay initiates the squib valves which will purge the CM RCS fluid systems in addition to depleting the pressurant, zone 13-A.

2.9.4.14.4 Canard Deploy and ELSC Arm.

Eleven seconds after the initiation of any LES ABORT, canard deployment is automated, zones 25 and 26-C and -D. This relay logic will also arm the ELSC, zone 10-D. Contacts of the CANARD DEPLOY

relay are incorporated parallel to the ELS LOGIC switch (S44) which must be in the OFF position during the launch and ascent phases of a mission. When arming of the ELSC is automated, through 3.0-second time delays, the same functions which are described in paragraph 2.9.4.13.8 will result.

2.9.4.14.5 ELSC Operation.

Functions of the ELSC may be initiated by baro switches time-delay relay logic or direct manual control. Baro switches are opened and closed by aneroid cells and are calibrated to close at approximately 24,000 and 10,000 feet during a nominal entry. During a nominal launch and ascent the 10,000-foot baro switches will open at approximately 18,000 feet and the 24,000-foot baro switches will open at approximately 40,000 feet. This is the result of several variables which include spacecraft velocity, attitude, and atmospheric conditions. During a mode 1A abort, for example, closure of CANARD DEPLOY relay contacts, zone 10-D, will not only arm the ELSC but will also activate it because the 24,000-foot baro switches will be closed in this instance. When the ELS ACTIVATE relays, zone 8-C, are energized, a signal will be relayed from a point starting at zone 7-D to the LET JETTISON AND FRANGIBLE NUTS relays, zone 26-F. This results in automatic LET jettison and, if the spacecraft is equipped with a docking probe, LM docking ring separation, zones 24 through 26-D and - E. Also, when the ELS ACTIVATE relays are energized, a signal will be relayed from a point starting at zone 7-E to the unlatching coils of the RCS ENABLE-DISABLE RELAYS, zone 7-A. This disables automatic control of the CM RCS. Time-delay relay logic is incorporated in the integrated MESC and ELSC, zones 6-C through -E, to automate the required functions at the lower altitudes before the baro switches are opened. The APEX COVER JETTISON relays, zone 5-E, will be energized 0.4 second after the ELSC is activated. DROGUE IGNITER relays, zones 4 and 5-D, will be energized 2.0 seconds after the ELSC is activated, or 1.6 seconds after the apex cover is jettisoned. PILOT CHUTES & DROGUE RELEASE relays, zone 5-B, will be energized 14.0 seconds after the ELSC is activated, or 12.0 seconds after the drogue parachutes are deployed. If the ELS switch (S63), zone 8-E, is placed in the MAN position, the automated functions of the integrated MESC and ELSC will be disabled. This switching inhibits the solid state switches (paragraph 2.9.4.13.8) which prevents activation of the ELSC. In the event of a worse case abort, automatic deployment of parachutes could result in landing in an unsafe area and direct manual control of ELS functions would be required. The direct manual switches, zones 6-B through -E, may be used to jettison the apex cover, deploy drogue parachutes, release drogue parachutes, and deploy the pilot parachutes of the main parachutes.

2.9.4.14.6 LES Abort Mode Switchover.

A configuration change is made in a portion of the SECS when the ABORT SYSTEM PRPLNT switch (S63), zone 20-B, is placed in the RCS CMD position. Normally this switching is concurrent with the expiration of the PROPELLANT DUMP AND PURGE DISABLE timer (paragraph 2.9.4.8). Requirements peculiar to a mode 1A abort (paragraph 2.9.4.14.3) are inhibited at this time and the requirements of any other mode abort, or a nominal mission, will be automated as a part of the CM/SM separation sequence. When the latching coils of the RCS ENABLE-DISABLE relays are energized, zone 7-A, the controller jet on/off assembly is enabled. This makes automatic control of the CM RCS possible (section 2.5, RCS).

2.9.4.14.7 Mode 1B Aborts.

Mode 1B aborts may be categorized according to the altitude at which the abort is initiated. Figure 2.9-34 illustrates the profile of an abort initiated after abort mode switchover (paragraph 2.9.4.14.5) and before reaching an altitude of approximately 30,000 feet. Figure 2.9-35 illustrates the profile of an abort initiated between the approximate altitudes of 30,000 and 100,000 feet. Part of the ELSC functions (items 12 through 17, figure 2.9-34) are automated by time-delay relay logic (paragraph 2.9.4.14.5) during mode 1B aborts initiated at the lower altitudes.

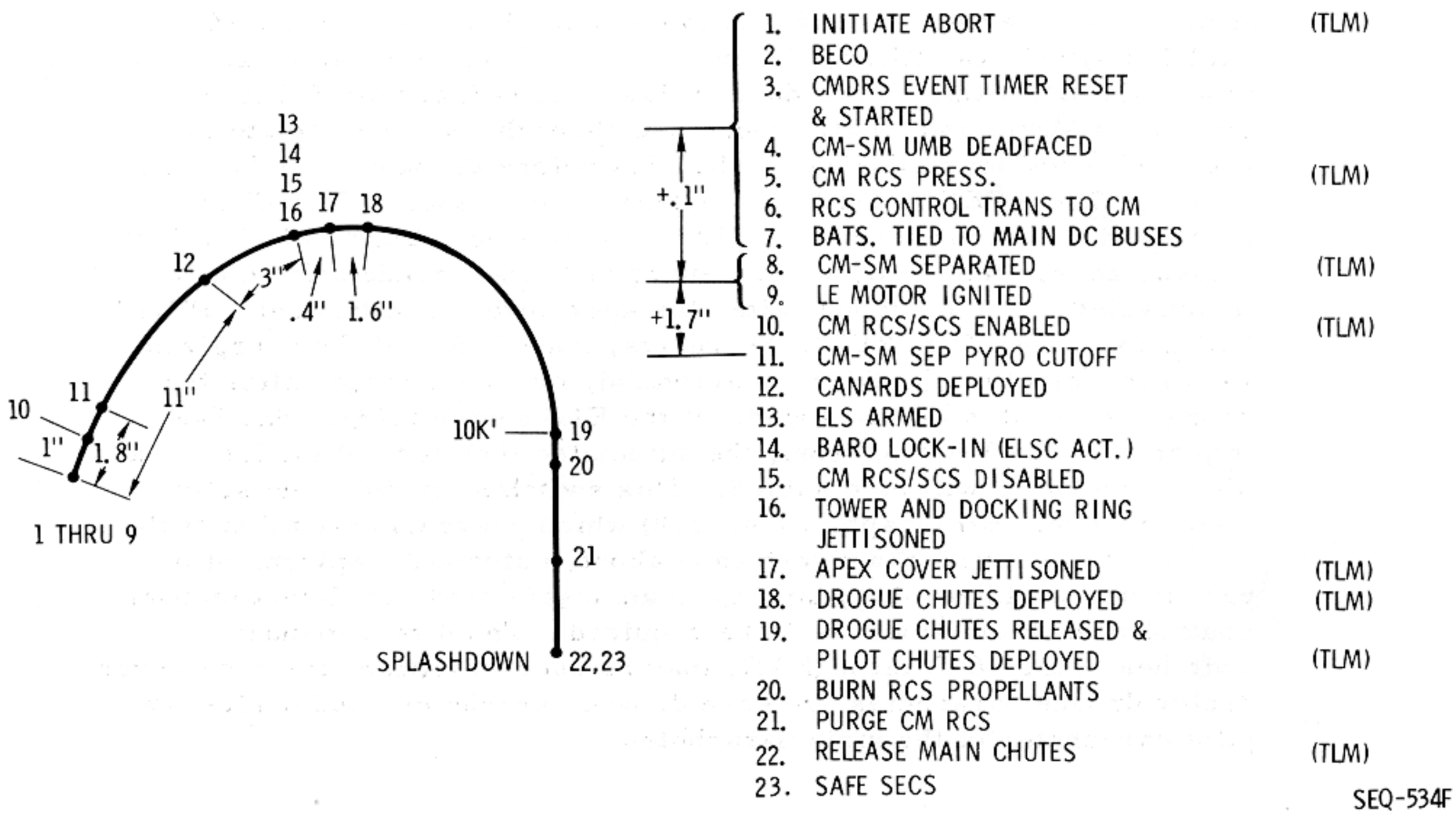

Figure 2.9-34. Event Profile, Mode 1B Abort
T + 42 Sec to ≈ 30,000 Feet

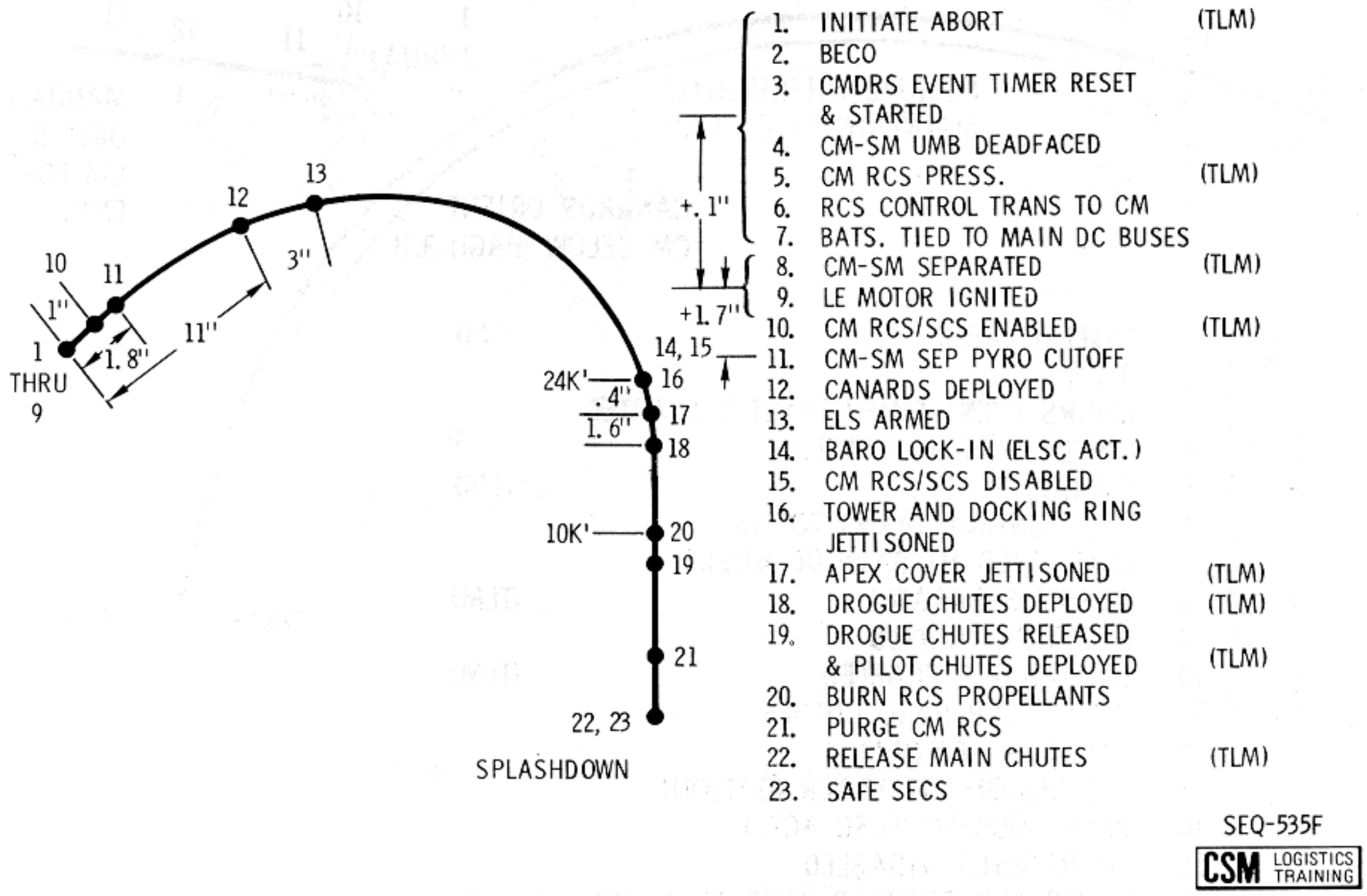

Figure 2.9-35. Event Profile, Mode 1B Abort
≈ 30,000 Feet to 100,000 Feet

All of the ELSC functions are automated by normal baro switch operation (items 13 through 18, figure 2.9-35) during mode 1B aborts initiated at the higher altitudes. Manually initiated requirements during descent and postlanding functions of mode 1B aborts are the same as during a nominal descent (paragraphs 2.9.4.13.15 and 2.9.4.13.16).

SEQ

2.9.4.14.8 Mode 1C Abort.

Mode 1C aborts (figure 2.9-36) are initiated at a time when the velocity of the LV is higher than the trim point of the canards. This is between an approximate altitude of 100,000 feet and normal LET jettison. The crew has the prerogative of jettisoning the LET shortly after the abort is initiated and utilizing the CM RCS for orientation similar to nominal entry maneuvers; or allowing the canards to orient the LEV when the free fall velocity is reduced to the trim point. If the latter option is elected there is a slight probability of an apex forward capture and violent rotational rates when the canards become effective aerodynamically. This slight probability can be avoided by imparting energy to the falling LEV. The CM RCS may be utilized to maintain a +pitch rate and this should be in excess of 5°/sec. There is no upper limit

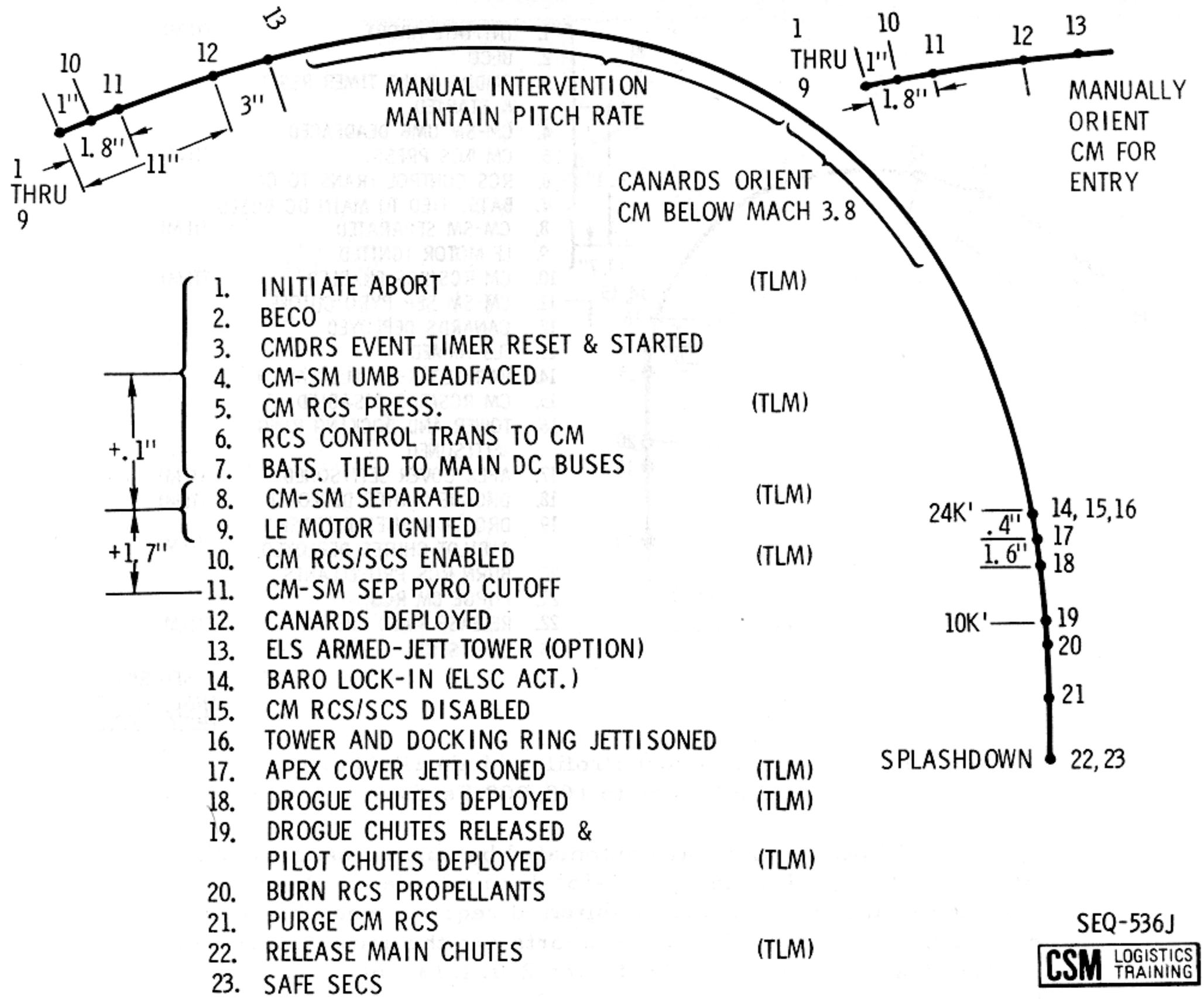

Figure 2.9-36. Event Profile, Mode 1C Abort

of rates since the CM RCS is limited under these flight conditions. Automation of ELSC functions during parachute descent and postlanding functions are the same as a nominal descent.

2.9.4.14.9 SPS Abort.

Sequential systems functions during an SPS abort are designed to separate the CSM from the LV with automation conducive to utilization of the SPS as required. Firing the SPS is not a function of the sequential systems. The way this propulsion system is utilized, or if it is utilized, is contingent on time into the mission, and maneuvering requirements for a safe recovery. Sequential systems automation is the same in all SPS aborts, figure 2.9-37. This type abort may be initiated any time after the LET is jettisoned until the CSM is separated from the LV. All

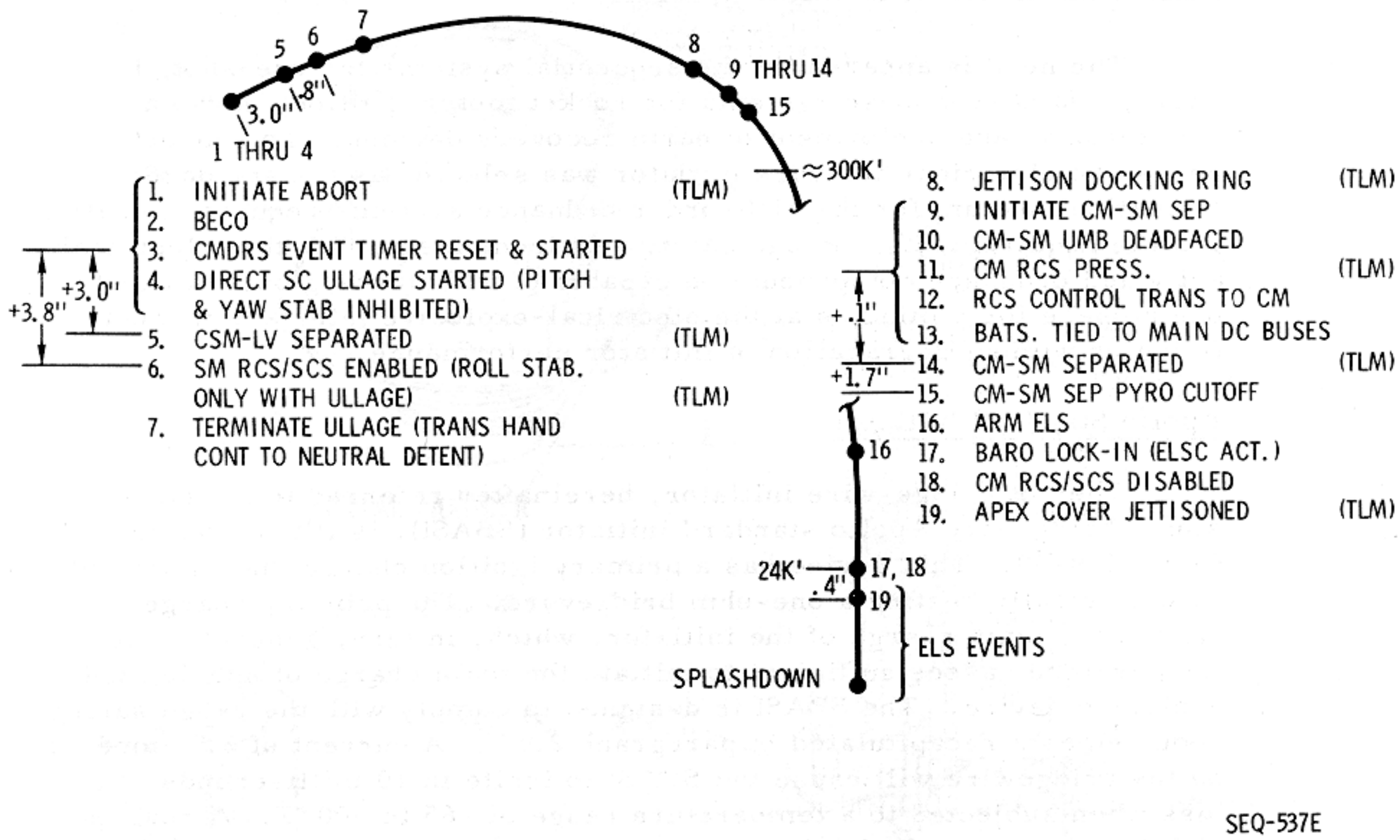

Figure 2.9-37. Event Profile, SPS Abort

SPS aborts must be initiated manually because the EDS automatic abort capability is lost when the LET is jettisoned (paragraph 2.9.4.8.4). Moreover, jettisoning of the LET results in configuration change in the abort start circuits (paragraph 2.9.4.14.1). ULLAGE relays in the MESC, zone 11-B, are energized when the abort is initiated and the +X translation engines of the SM RCS are fired. The same signal that fires the engines also inhibits pitch and yaw rate stabilization in the SCS. CSM-LV SEPARATE relays, zone 9-B, are energized after a time delay of 3.0 seconds and the SC will be separated from the LV (paragraph 2.9.4.9). RCS ENABLE ARM relays, zone 8-A, are energized after a time delay of 0.8 second and automated control of the SM RCS will be enabled (paragraph 2.9.4.9.1). If the SC is equipped with a docking probe it will be necessary to separate the LM docking ring (paragraph 2.9.4.12) at some time conducive to the situation. CM/SM separation and descent operations are the same as during a nominal entry (paragraphs 2.9.4.13.1 through 2.9.4.13.16).

2.9.5 PERFORMANCE AND DESIGN DATA.

The need is apparent in the sequential systems for one-shot, high-energy, quick-response systems for rocket motor ignition, physical separations, and deployment of earth recovery devices. To support these needs, an electrical hot-wire initiator was selected as the standard activation medium for the high-order ordnance systems required to satisfy vehicle requirements. Range safety requirements dictate that electrically activated ordnance components be capable of withstanding one watt and one ampere for 5 minutes at the electrical-explosive interface without firing or without degradation of initiator performance.

2.9.5.1 Apollo Standard Initiator.

The hot bridge-wire initiator, hereinafter referred to as the single bridgewire Apollo standard initiator (SBASI), is illustrated in figure 2.9-38. This device has a primary ignition charge that is ignited by electrically heating a one-ohm bridgewire. The primary charge ignites the main charge of the initiator, which, in turn, generates high-temperature gasses sufficient to initiate the main charge of specialized explosive device. The SBASI is designed to comply with the range safety requirements recapitulated in paragraph 2.9.5. A current of 3.5 amperes on the bridgewire will cause the SBASI to ignite in 10 milliseconds or less when subjected to a temperature range of -65 to 300°F. A current of 5.0 amperes on the bridgewire will cause the SBASI to ignite in 15 milliseconds or less from -260 to -65°F.

2.9.5.2 Compliance With Design Requirements.

The basic electrical design criteria for initiators are rigidly specified in the Air Force Eastern Test Range Manual, Range Safety Manual, AFE TRM127-1 (1 November 1966). In addition to the design criteria specified in this manual, the following Apollo requirements have been satisfied:

a. The electroexplosive devices are electrically shorted until they are fired to prevent inadvertent ignition (figure 2.9-18, paragraph 2.9.4).

b. At least two individually operated switching circuits are incorporated between the initiators and their pyrotechnic battery terminals. These are "arming" switches and "firing" switches which are illustrated in figure 2.9-20.

c. Logic control circuits of ordnance firing circuits receive operating power from a source other than pyrotechnic batteries.

d. All logic and pyrotechnic firing circuits are at least dual redundant.

e. All logic timing circuits will fail in the $T = \infty$ mode.

2.9.5.3 Component Selection and Installation.

A portion of the high reliability achievement of the sequential systems is because basic rules in component design, assembly and testing

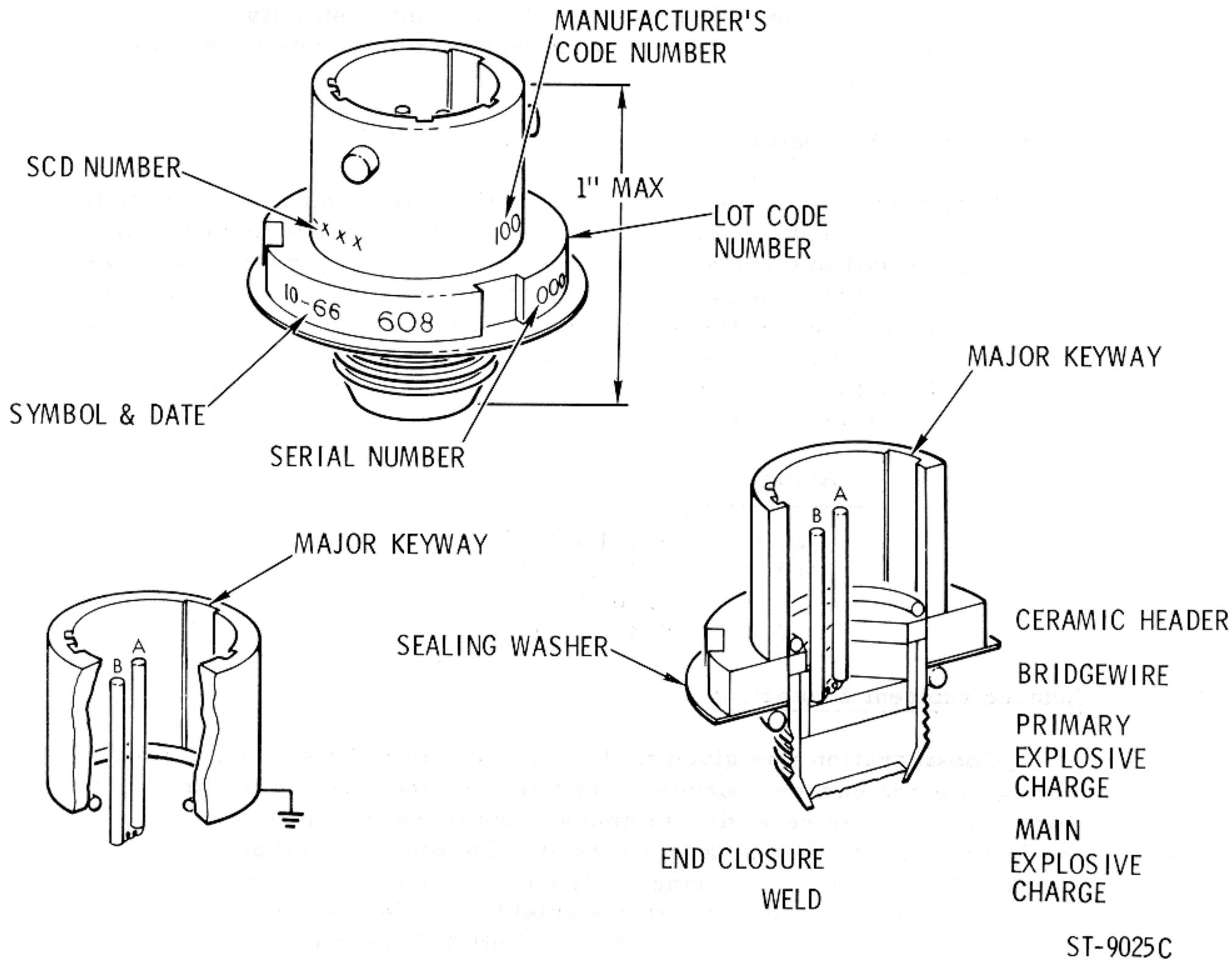

Figure 2.9-38. Single Bridgewire Apollo Standard Initiator

are closely followed. Carefully prepared specifications for components include the expected maxima of shock, vibration, acceleration, temperatures, margins, etc., not only at the time and interval of use, but throughout the whole flight. Relay contact environment has been controlled by hermetically sealed cases and potting. Components are screened 100 percent; that is, each relay is individually tested through repeated cycling prior to acceptance. In the implementation of the series contact circuits, the physical relays are mounted orthogonal to each other to ensure the abnormal vibration or acceleration forces, which may be of sufficient magnitude to prematurely close a given set of contacts, will not be reflected into the same actuation plane of the other relay of the same firing circuit. Verification of circuit integrity is important to ensure that all circuit elements have been properly assembled and installed.

Resistance measurements can validate that circuit continuity is within acceptable limits in order that the required current values to the SBASI can be guaranteed.

2.9.5.4 Firing Circuit Protection.

Fusistors are located in series with the output contacts of the firing relays (figure 2.9-18). Thus individual protection of each pyrotechnic firing circuit will prevent a current leakage path on any given firing line. A continual discharge of pyrotechnic battery power is impossible in this circuit design. These fusistors are specially designed to withstand high acceleration and vibration levels. The resistance value of these devices is 0.95 to 1.10 ohms at 25°C. The time-current operating characteristics are reflected in the following tabulation:

Amperes	Seconds
20.0	0.03 to 0.17
10.0	0.20 to 1.20
8.0	0.30 to 8.00
7.0	0.40 to 20.00

2.9.5.5 Induced Current Protection.

Consideration was given to the susceptibility of the firing circuit wiring to other energy sources. Unprotected, the circuits leading to the SBASI could act as receiving antennas, thus funneling more energy to the SBASI than it could pick up by itself. To minimize RF pickup, the electrical leads from the firing relay contacts are twisted (20 twists per 12 inches) and are shielded with the shield grounded at the firing relay interface and at the case of the SBASI. Full 360-degree shielding is provided between the shield and the SBASI case.

2.9.5.6 Pyro Arm Switch Lock.

The Range Safety Manual requires that a positive mechanical lock be used in the ARM/SAFE actuation device to prevent movement from the safe to the armed position. A device developed for this purpose is illustrated in figure 2.9-39. Removal of the lock is accomplished by the insertion of a key that is provided to the astronaut during the final pre-launch preparations.

2.9.5.7 Tower Jettison Motor.

The TJM (figure 2.9-40) is intended to provide thrust capability, under normal mission operation, to effect adequate separation of the LES from the CM, while the latter is undergoing acceleration by the second stage booster; and, under abort conditions, to achieve adequate

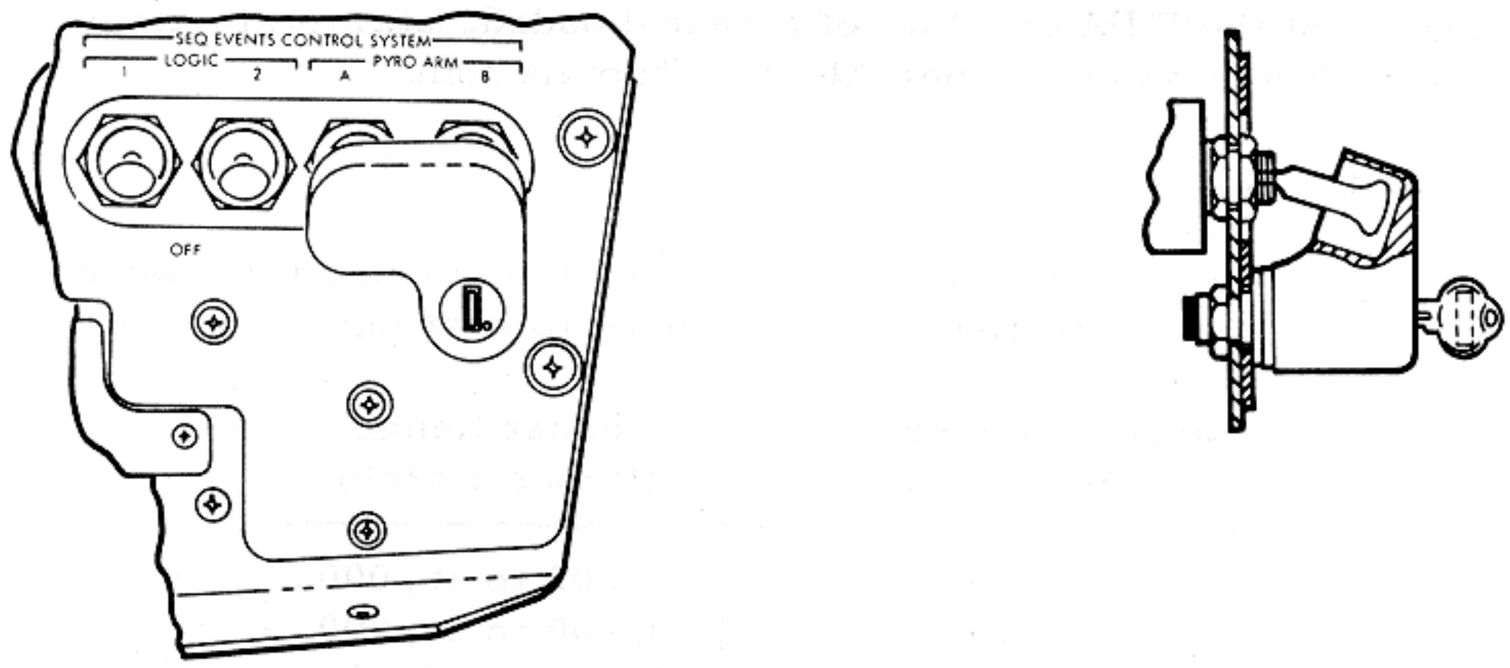

SEQ-556

Figure 2.9-39. Pyro Arm Switch Guard

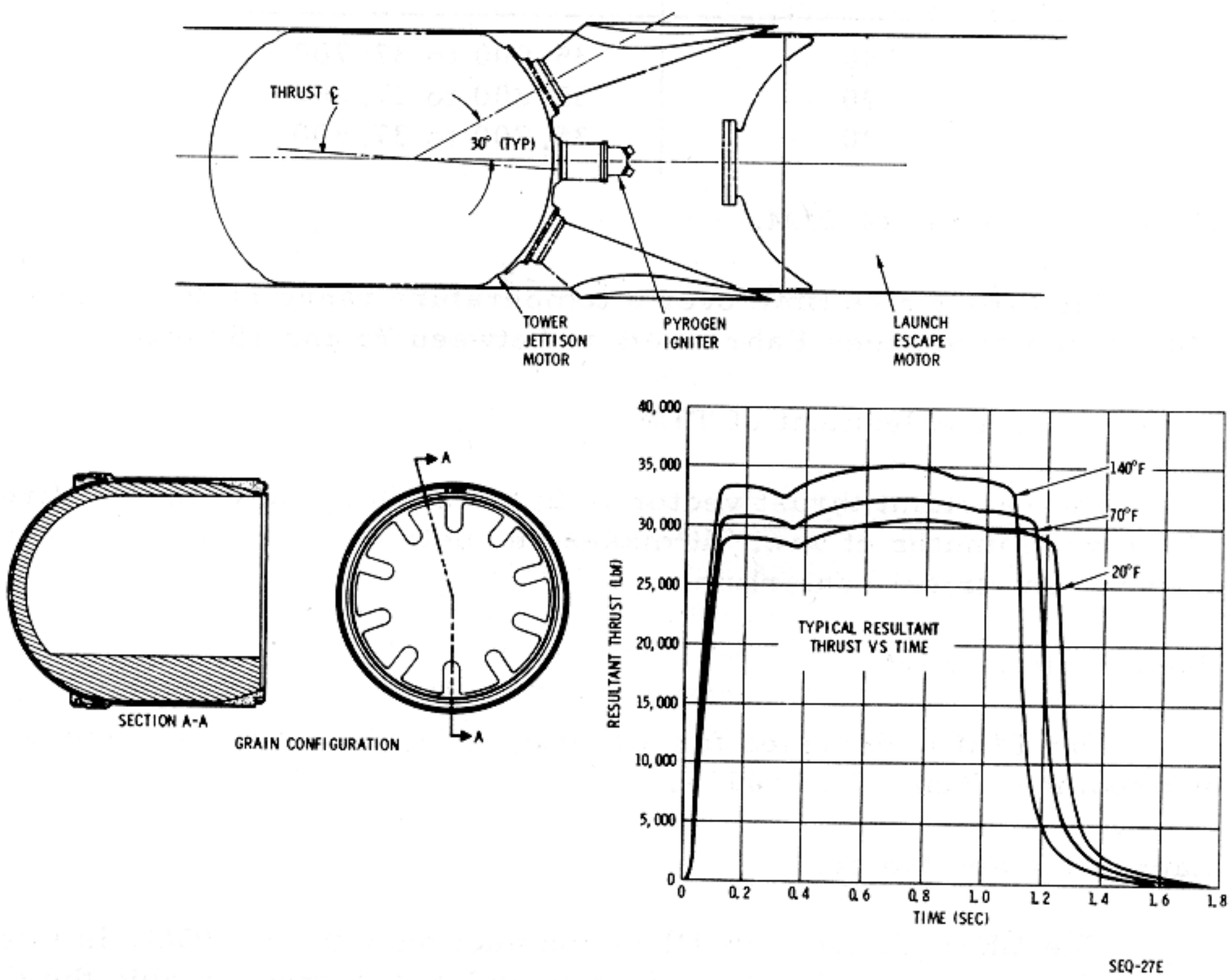

Figure 2.9-40. Tower Jettison Motor

separation of the LES from the CM after LEM burn out. The propellant charge of the TJM consists of a case-bonded, star grain employing a polysulfide ammonium perchlorate formulation.

2.9.5.7.1 Thrust of TJM.

The average resultant thrust over the burning time when measured at sea level is reflected in the following tabulation:

Motor Temperature (Degrees Fahrenheit)	Thrust Range (Pounds Force)
140	31,200 to 36,000
70	29,400 to 33,900
20	28,000 to 32,400

2.9.5.7.2 Total Impulse of TJM.

The resultant impulse at sea level (calculated) over the action time is reflected in the following tabulation:

Motor Temperature (Degrees Fahrenheit)	Total Impulse Range (Pounds-Seconds)
140	35,900 to 37,700
70	35,800 to 37,600
20	35,700 to 37,500

2.9.5.7.3 Thrust Rise Time of TJM.

The thrust rise time over a temperature range of 20 minimum to 140 maximum degrees Fahrenheit is between 75 and 150 milliseconds.

2.9.5.7.4 Thrust Vector Alignment of TJM.

The resultant thrust vector is in the pitch plane in the +Z direction within ±30 minutes of yaw. It makes an angle of 3 to 4.5 degrees to the motor geometrical centerline.

2.9.5.7.5 Useful Life of TJM.

The TJM is designed for a storage life of 5 years in a temperature environment from 25 to 105°F.

2.9.5.8 Launch Escape Motor.

The LEM (figure 2.9-41) in conjunction with the PCM, is intended to provide capability for the safe removal of the crew, inside the CM, from a malfunctioning LV at any time from access arm retraction until

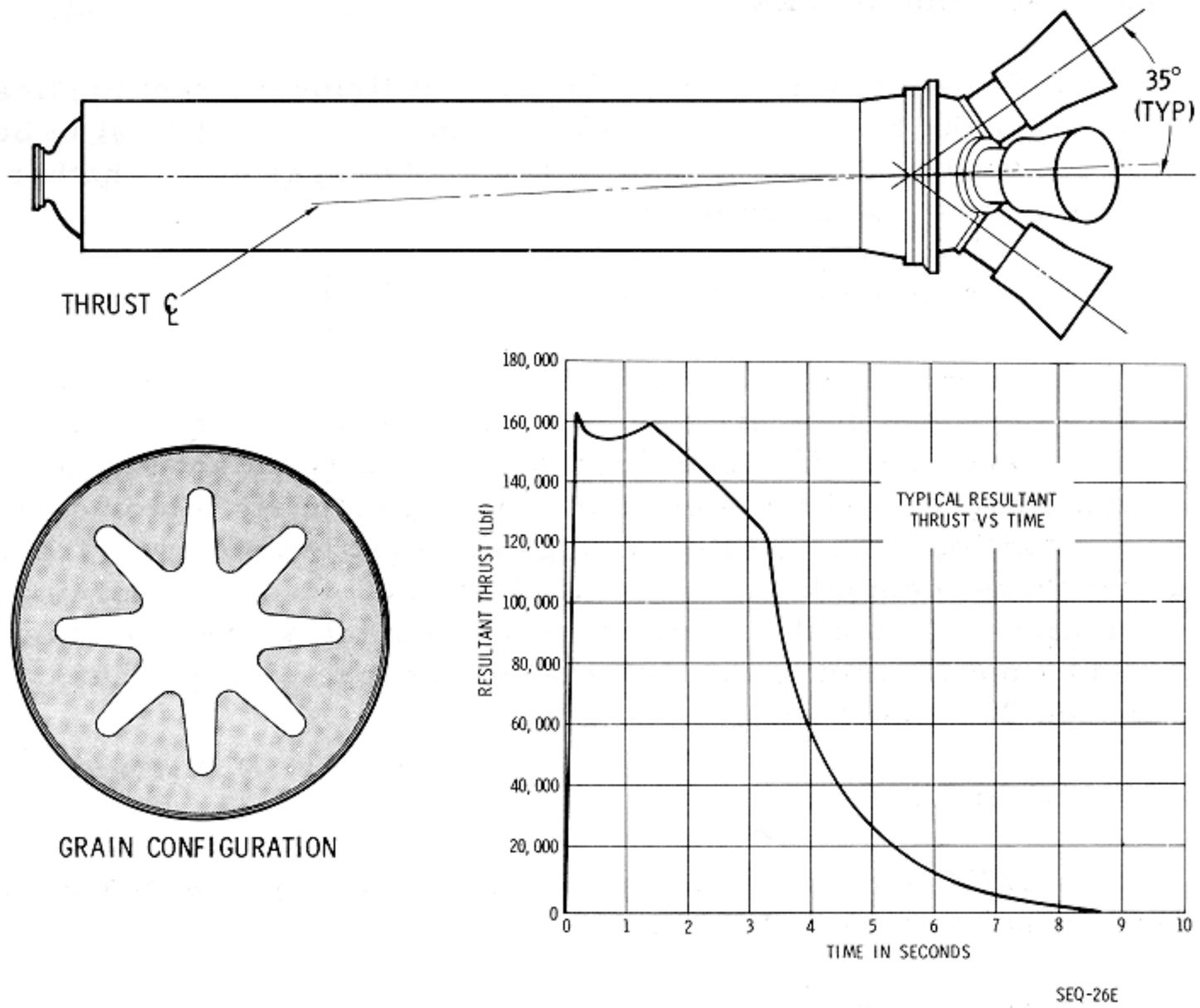

Figure 2.9-41. Launch Escape Motor

successful completion of second-stage ignition. The propellant of the LEM consists of a case-bonded, eight-point star grain employing a polysulfide ammonium perchlorate formulation.

SEQ

2.9.5.8.1 Thrust of LEM.

Resultant thrust of the LEM will fall within the following limits when corrected to a temperature of 70°F and sea-level barometric pressure:

a. Thrust will not be greater than 177,000 pounds force (lbf). (This is equal to 200,000 lbf at 120°F in a vacuum.)

b. Thrust between 0.2 and 2.0 seconds after firing, current application will not be less than 135,000 lbf. (This is equivalent to 121,000 lbf at 20°F and sea-level barometric pressure.)

2.9.5.8.2 Total Impulse of LEM.

The minimum delivered total impulse of the LEM is 515,000 pound-seconds. The minimum delivered total impulse between 0.12 and 2.00 seconds is 233,064 pound-seconds.

2.9.5.8.3 Thrust Rise Time of LEM.

The thrust rise time from the time of firing current application to the time that the thrust reaches 90 percent of ignition thrust is between 50 and 120 milliseconds. These limits apply regardless whether one or two igniter cartridges are used.

2.9.5.8.4 Thrust Vector Alignment of LEM.

The centerline of each nozzle forms an angle of 35 degrees ±15 minutes with the mean geometric motor centerline. The nozzles located in the pitch plane have off-sized throats to give a resultant thrust vector oriented 2 degrees 45 minutes to the mean geometric motor centerline in the -Z direction. The maximum angular deviation of thrust from the nominal thrust centerline during the first 0.20 second of burning is ±15 minutes. During this same time period, the average roll moment induced by nozzle alignment, internal ballistics, or any other cause will not exceed 200 pound-feet.

2.9.5.8.5 Useful Life of LEM.

The LEM is designed for a storage life of 5 years in a temperature environment from 25 to 105°F.

2.9.5.9 Pitch Control Motor.

The PCM (figure 2.9-42) in conjunction with the LEM, is employed to place the LEV in the correct flight attitude for a successful escape during mode 1A aborts. The propellant of the PCM consists of a case-bonded, 14-point star grain employing a polysulfide ammonium perchlorate formulation.

2.9.5.9.1 Thrust of PCM.

Resultant thrust of the PCM will not exceed 3550 lbf at 70°F and sea-level barometric pressure. This is equivalent to 4000 lbf at 140°F in a vacuum.

2.9.5.9.2 Total Impulse of PCM.

The total delivered impulse of the PCM will be 1750 pound-seconds ±3 percent at 70°F and sea-level barometric pressure.

2.9.5.9.3 Thrust Rise Time of PCM.

The thrust rise time from time of firing current application to the time at which the thrust reaches 80 percent of maximum will be between 60 and 120 milliseconds at 70°F.

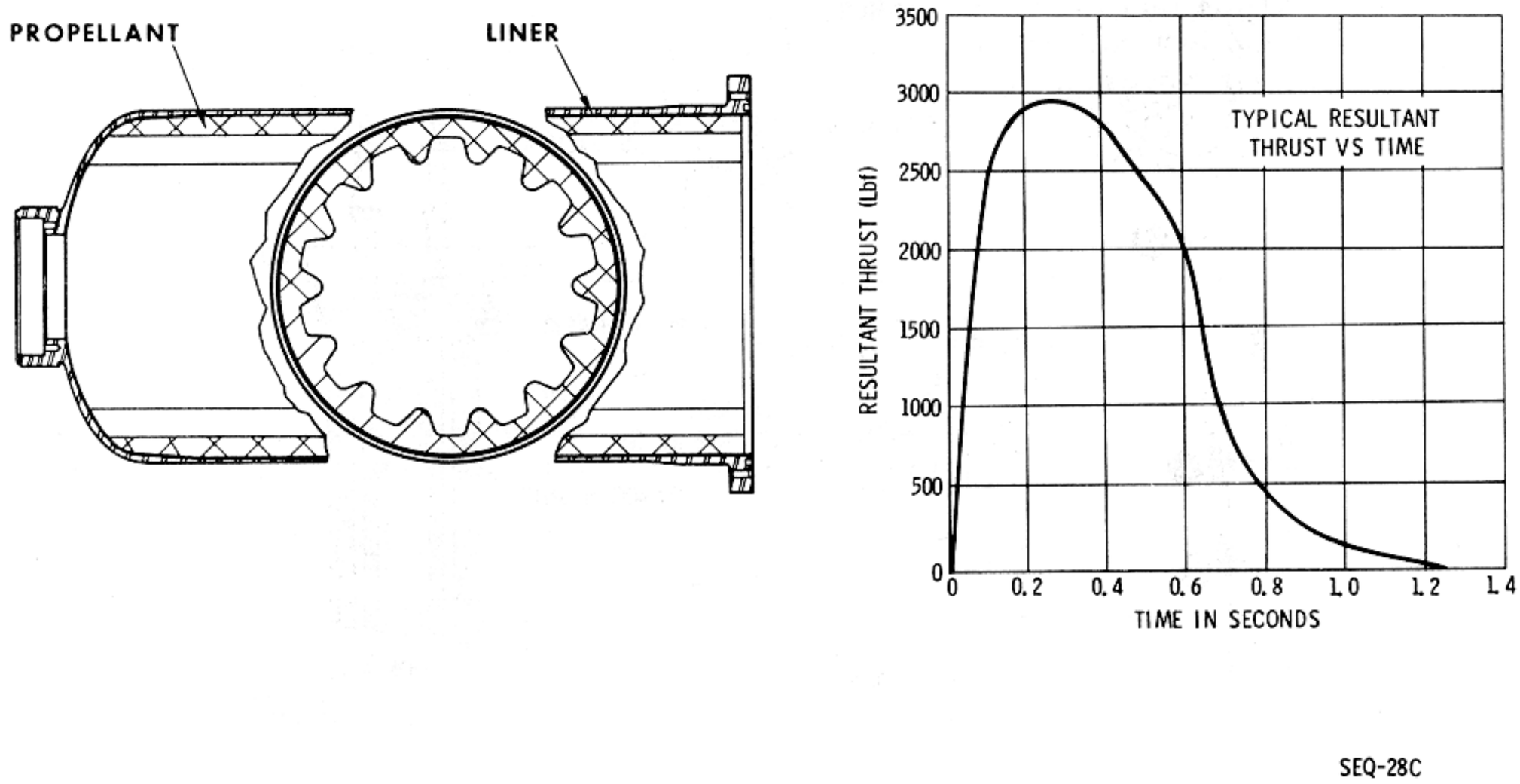

Figure 2.9-42. Pitch Control Motor

2.9.5.9.4 Thrust Vector Alignment of PCM.

The PCM is designed so that the resultant thrust vector coincides with the centerline of the motor chamber mounting surfaces within ±30 minutes.

2.9.5.9.5 Useful Life of PCM.

The PCM is designed for a storage life of 5 years in a temperature environment from 25 to 105°F.

2.9.5.10 LES Igniter.

Two initiators are installed in each LES igniter (figure 2.9-43). Boron pellets are ignited and they in turn ignite the main charge of Pyrogen which spews flame into the grain of the rocket motor.

2.9.5.11 Squib Valves

Hot gas pressure generated by the SBASI actuates the squib valve (figure 2.9-44). The spool shears the ends of inlet and outlet plumbing which is sealed initially. Sixteen valves of this configuration are incorporated in the fluid systems of the CM RCS (section 2.5, RCS).

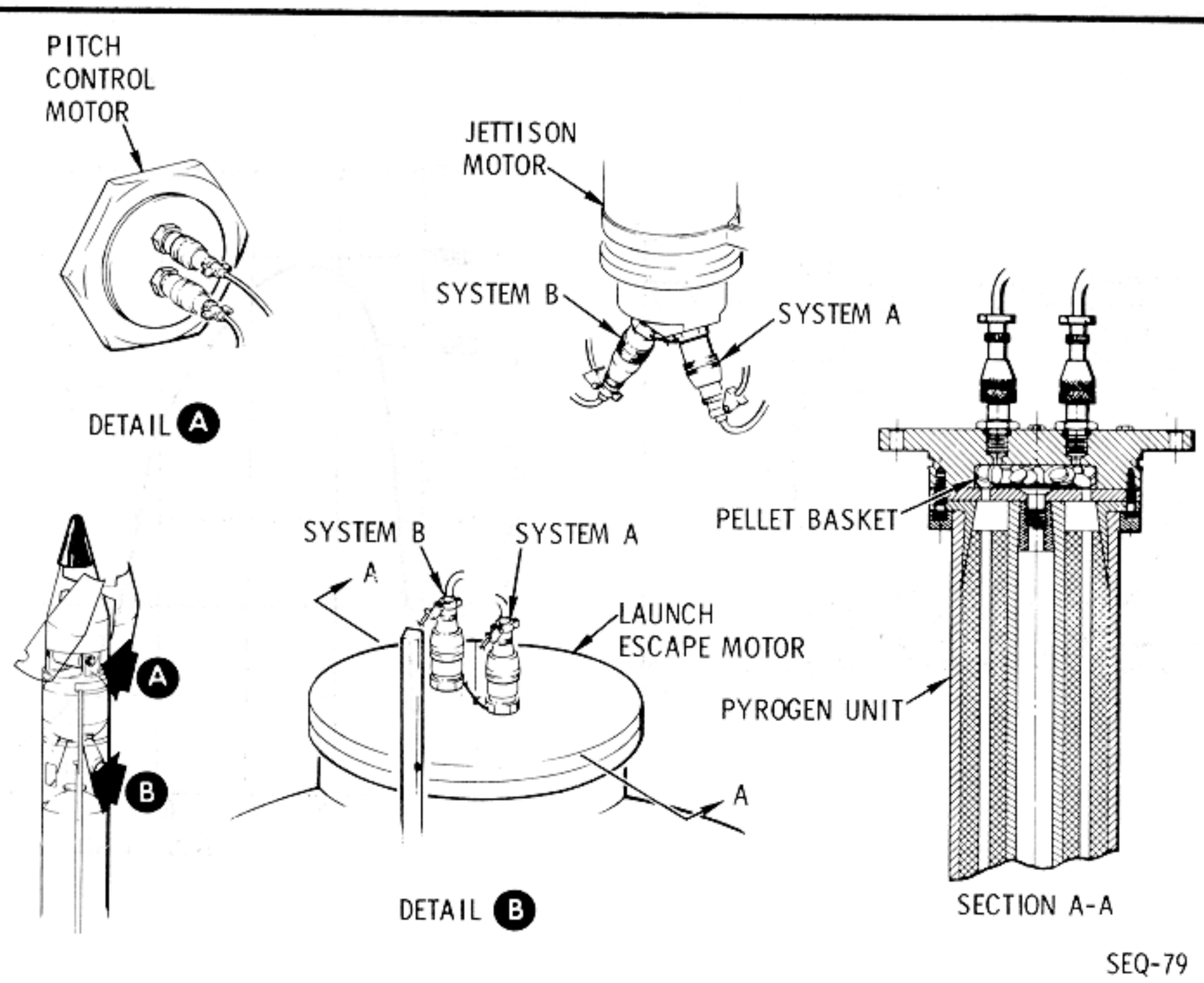

Figure 2.9-43. LES Igniters

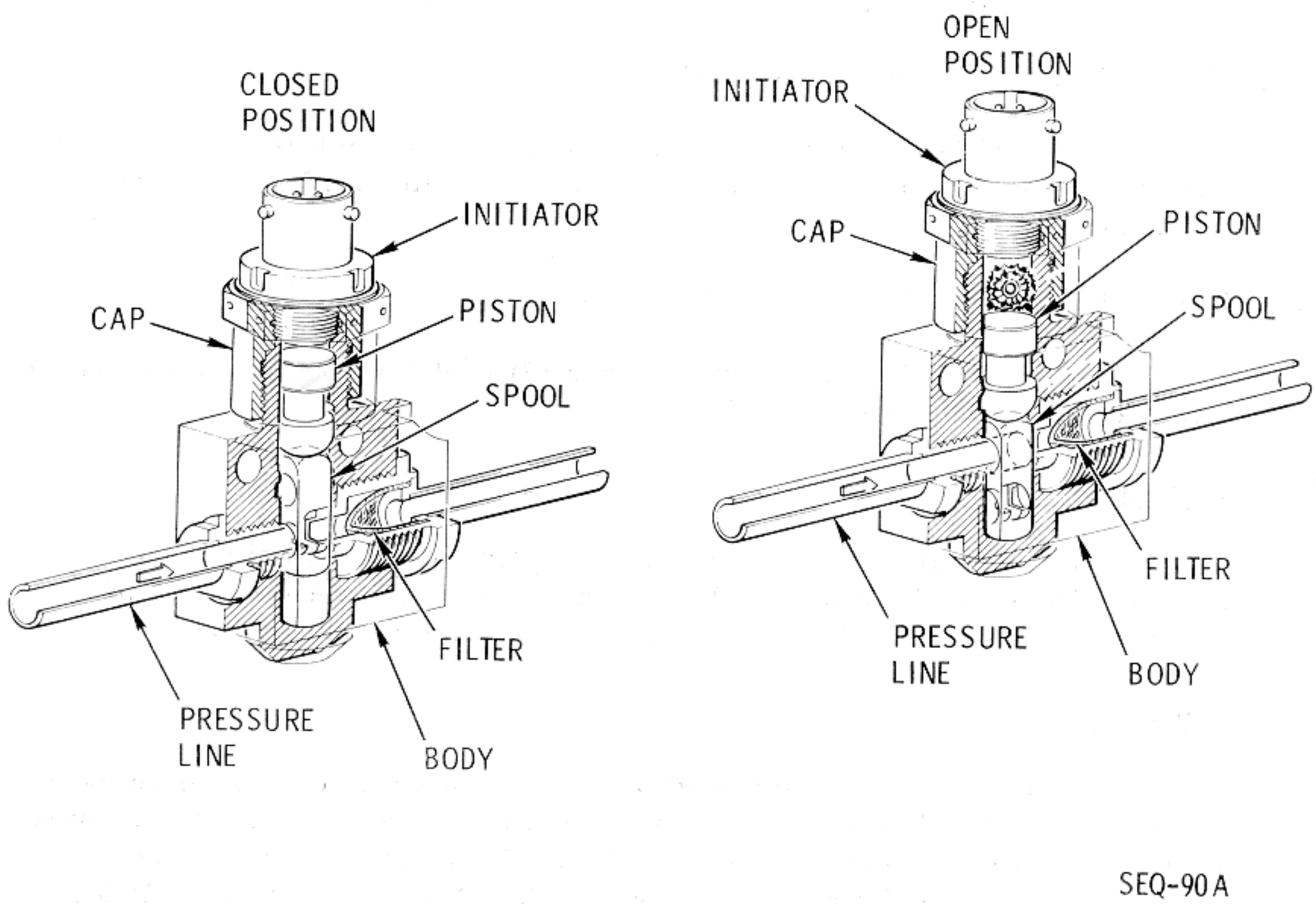

Figure 2.9-44. Squib Valve

2.9.5.12 Detonators.

One of the specialized explosive devices used in some of the Apollo ordnance systems is the detonator cartridge (figure 2.9-45). The SBASI is used in this application to ignite additional explosive charges which are usually composed of lead azide and RDX.

2.9.5.12.1 LET Frangible Nuts.

In one application, the high-energy concussion of detonators is used to break frangible nuts (figure 2.9-24). Two detonators are installed in each nut and connected to firing circuits A and B. Normally both detonators of each nut will fire and the nut will be broken into two parts; however, if one detonator should fail, the nut will be spread enough for thread clearance.

2.9.5.12.2 SLA Separation Ordnance System.

Confined detonating fuse is used to transmit detonation from detonators to detonating cord which is installed along cutting planes of the SLA (figure 2.9-25). Two detonators are utilized in this explosive train for redundancy. One detonator is initiated by system A firing circuits and the other by system B. Either of the detonators will activate the entire ordnance system. Umbilical separation disconnect plug assemblies are blown

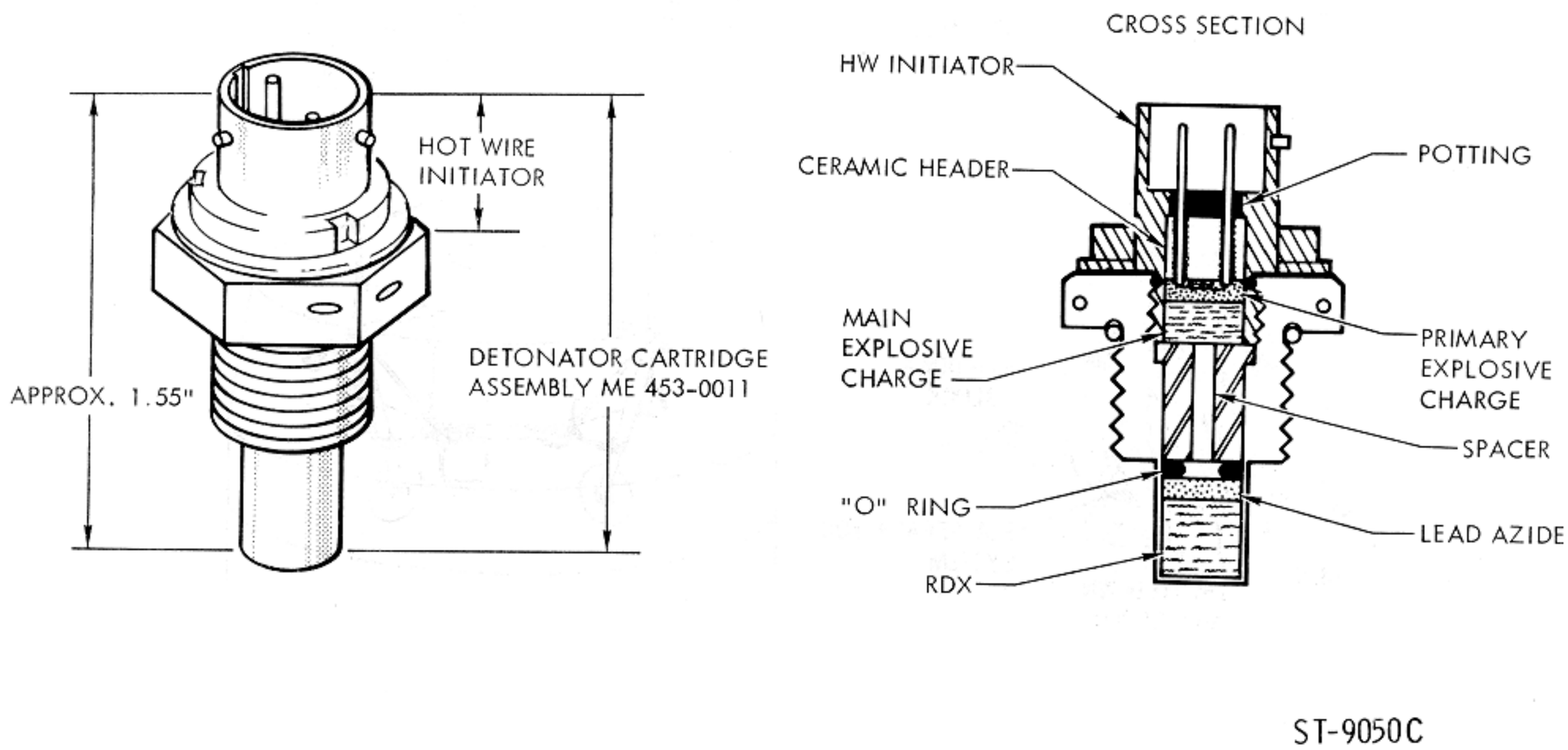

Figure 2.9-45. Detonator Cartridge Assembly

apart disconnecting the electrical wiring between the LV and CSM. An umbilical disconnect swing arm is activated, which is the interface between the LM and the GSE flyaway umbilical on one of the SLA panels. Eight panel thrusters are also activated to start deployment of the SLA panels.

2.9.5.12.3 LM Separation System.

Frangible links retain the clamps which are used to secure the LM legs to the SLA. Detonators are used to break the links and spring-loading opens the clamps (figure 2.9-46). Either of the detonators will break the frangible link. A pair of detonators is also utilized to activate guillotine blades of the lower umbilical; these detonators are not sympathetic and either guillotine blade will cut the wire bundle. Deadfacing in this instance is accomplished by relay logic (paragraph 2.9.4.11).

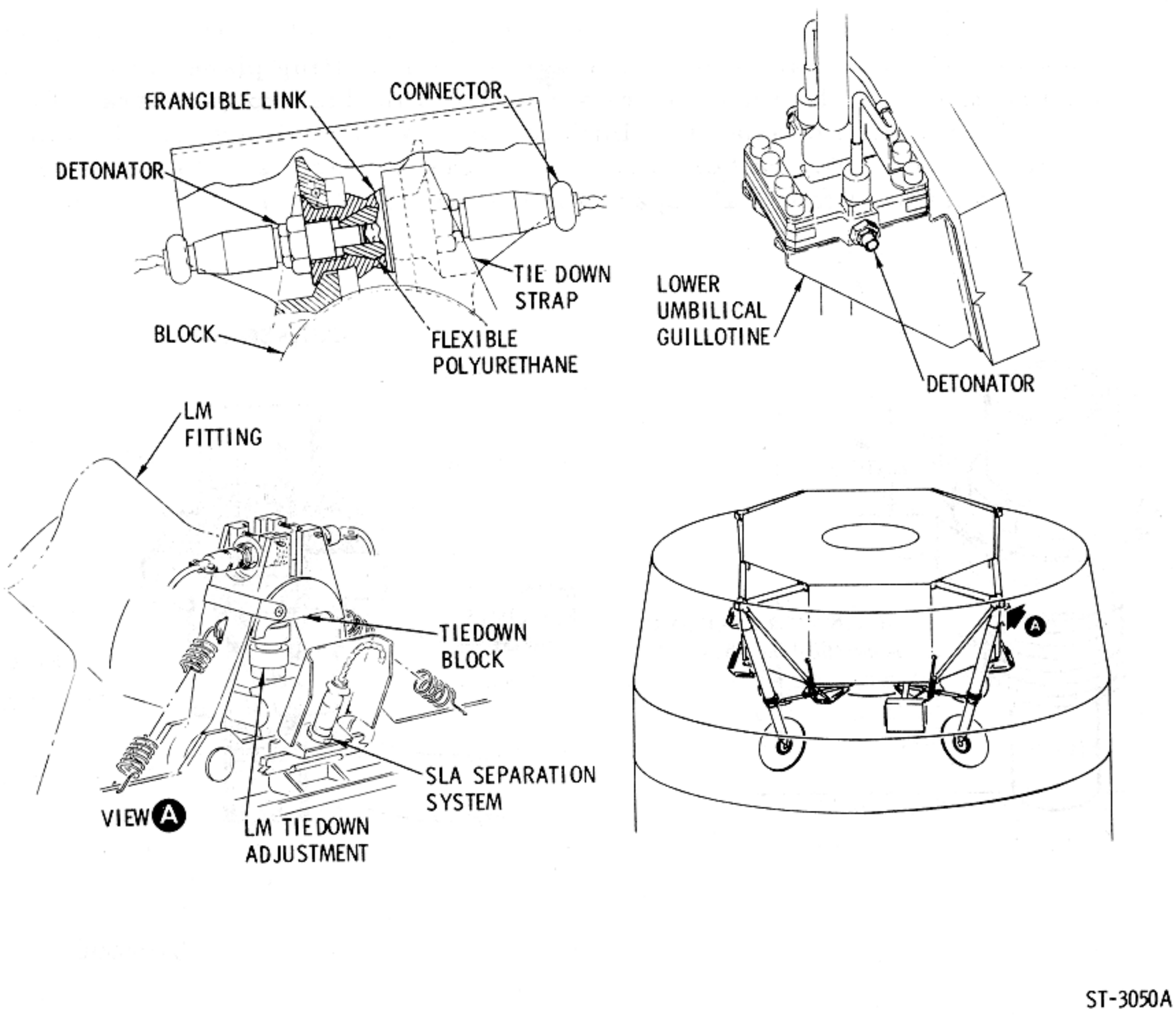

Figure 2.9-46. LM Separation System

2.9.5.12.4 CM-SM Separation System.

Redundant linear-shaped charges are used to cut three tension tie straps which constitute the physical bond of the CM and SM (figure 2.9-30). A detonator is used to explode each linear-shaped charge which is sympathetic to the other. Either of the linear-shaped charges will cut the tension tie strap it is mounted on; therefore, the sympathetic nature is not required to meet minimum reliability requirements. The electrical-explosive interface wiring to each detonator is also cut by the linear-shaped charges.

2.9.5.13 Pressure Cartridge Assemblies.

Solid propellant pressure cartridges (figure 2.9-47) have several applications in Apollo ordnance systems. The SBASI is used to initiate a propellant charge. The size of the main charge required is contingent on pressure requirements.

2.9.5.13.1 Electrical Circuit Interrupters.

Two types of circuit interrupters are actuated when the CM and SM are deadfaced during the separation sequence. Two CM-SM circuit interrupters (figure 2.9-27) are mechanized by cams. Gas pressure forces a piston to move into a locked position and the piston is connected to cam forks. Inclined planes on the cam forks forces lift plates up which separate the mating parts of electrical receptacles. Two SM circuit interrupters will deadface battery power, together with ground returns, to the SM main buses (figure 2.9-28). Gas pressure forces pistons against stops and the pins of the electrical receptacles are pulled from the mating part. The piston assemblies include the contact pins.

2.9.5.13.2 Canard Actuators.

Two gas pressure cartridges are used to actuate canard deployment (figure 2.9-48). Hot gas on one side of a piston will cause the actuator shaft to retract. A closed hydraulic system on the opposite side of the piston dampens transient loads, and check valves in the fluid systems will maintain the piston in its actuated position. The actuator shaft also incorporates a mechanical lock in the actuated position.

2.9.5.13.3 Parachute Mortars.

Two drogue parachutes, three pilot parachutes of the main parachutes, and one drag parachute of the apex cover augmentation system are deployed by mortar assemblies (figure 2.9-49). Two sympathetically initiated pressure cartridges are mounted on the breech assembly of each mortar. A sabot, which is effectively a fiberglass piston, is incorporated to protect the parachute fabric from hot gas. The covers of the mortars

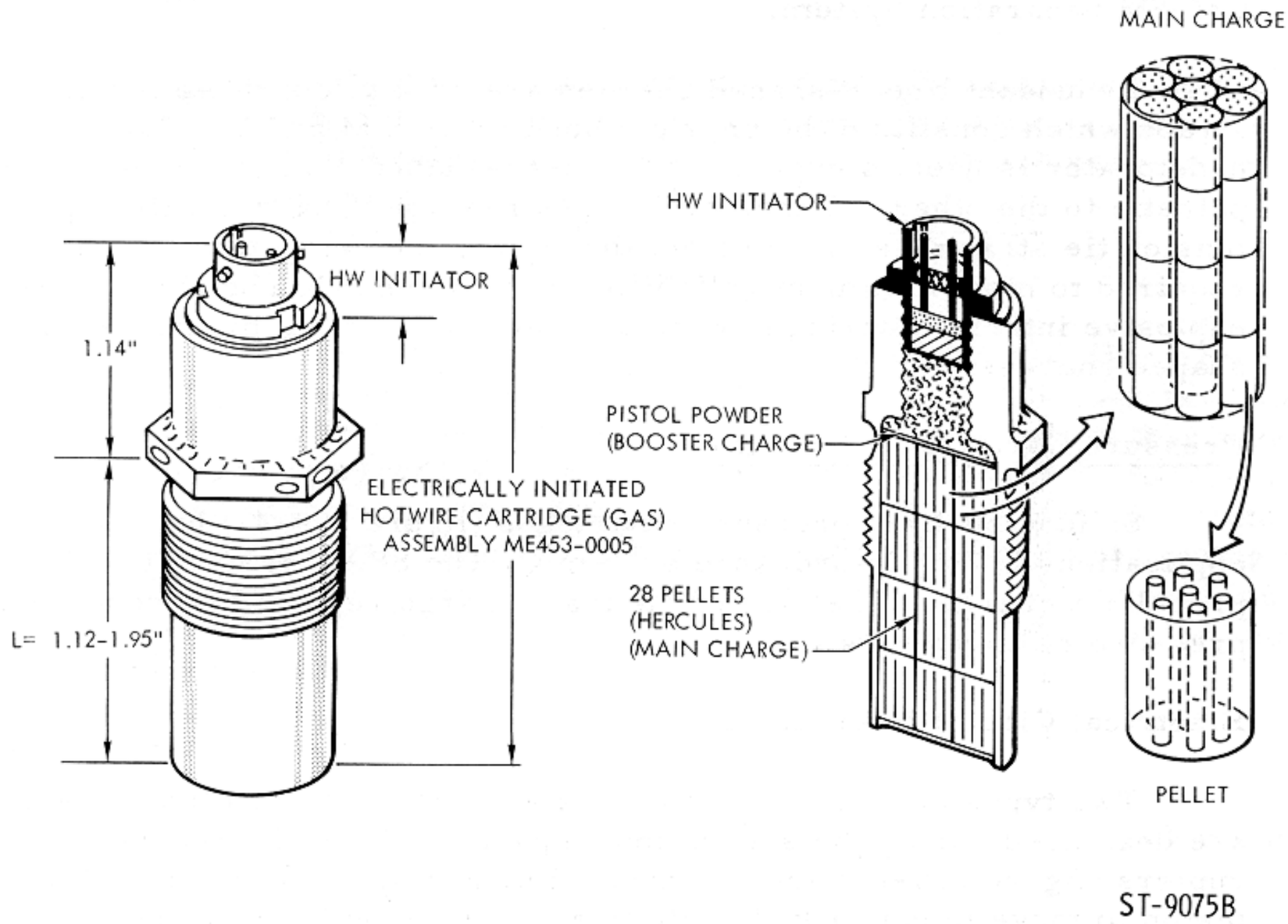

Figure 2.9-47. Pressure Cartridge Assembly

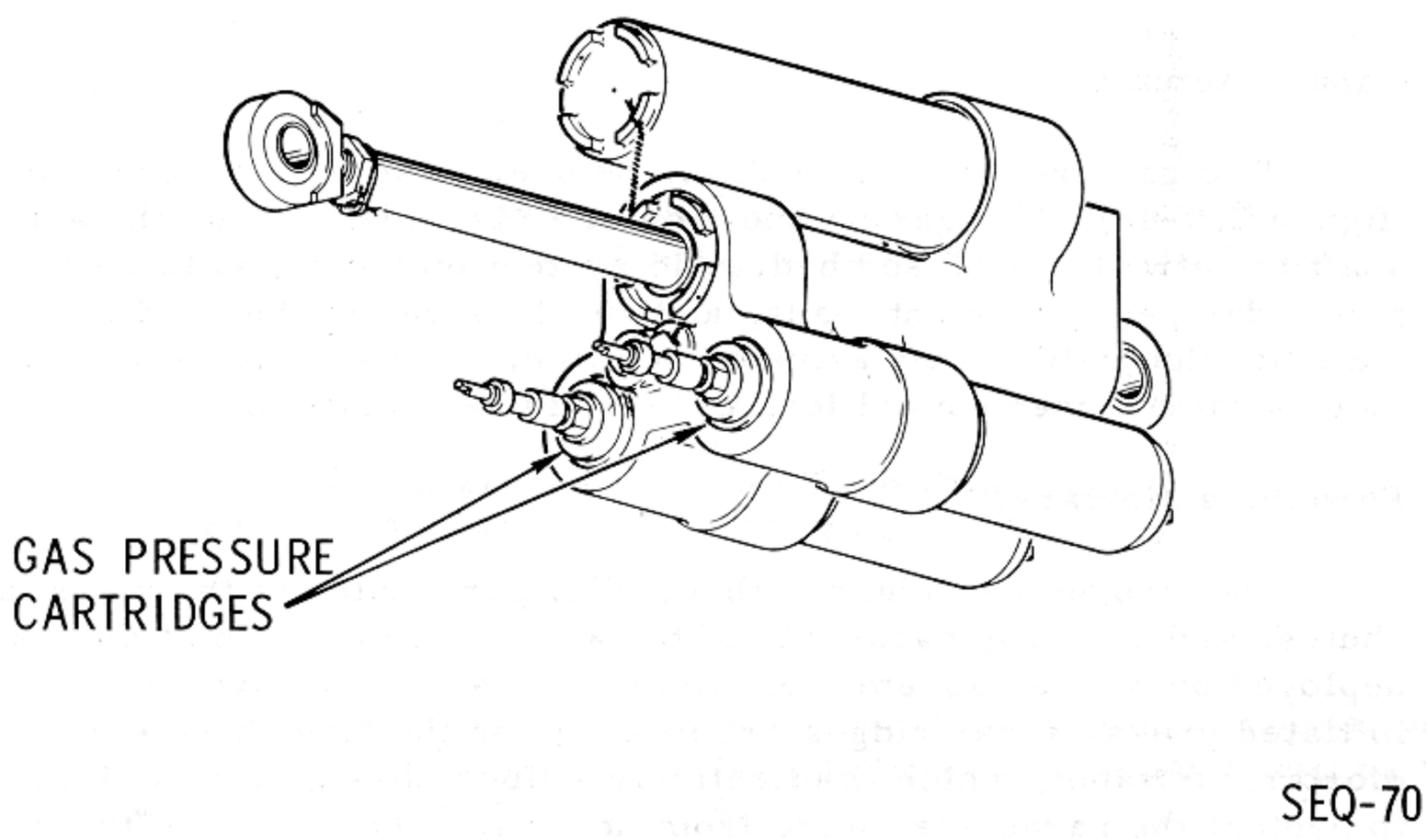

Figure 2.9-48. Canard Actuator

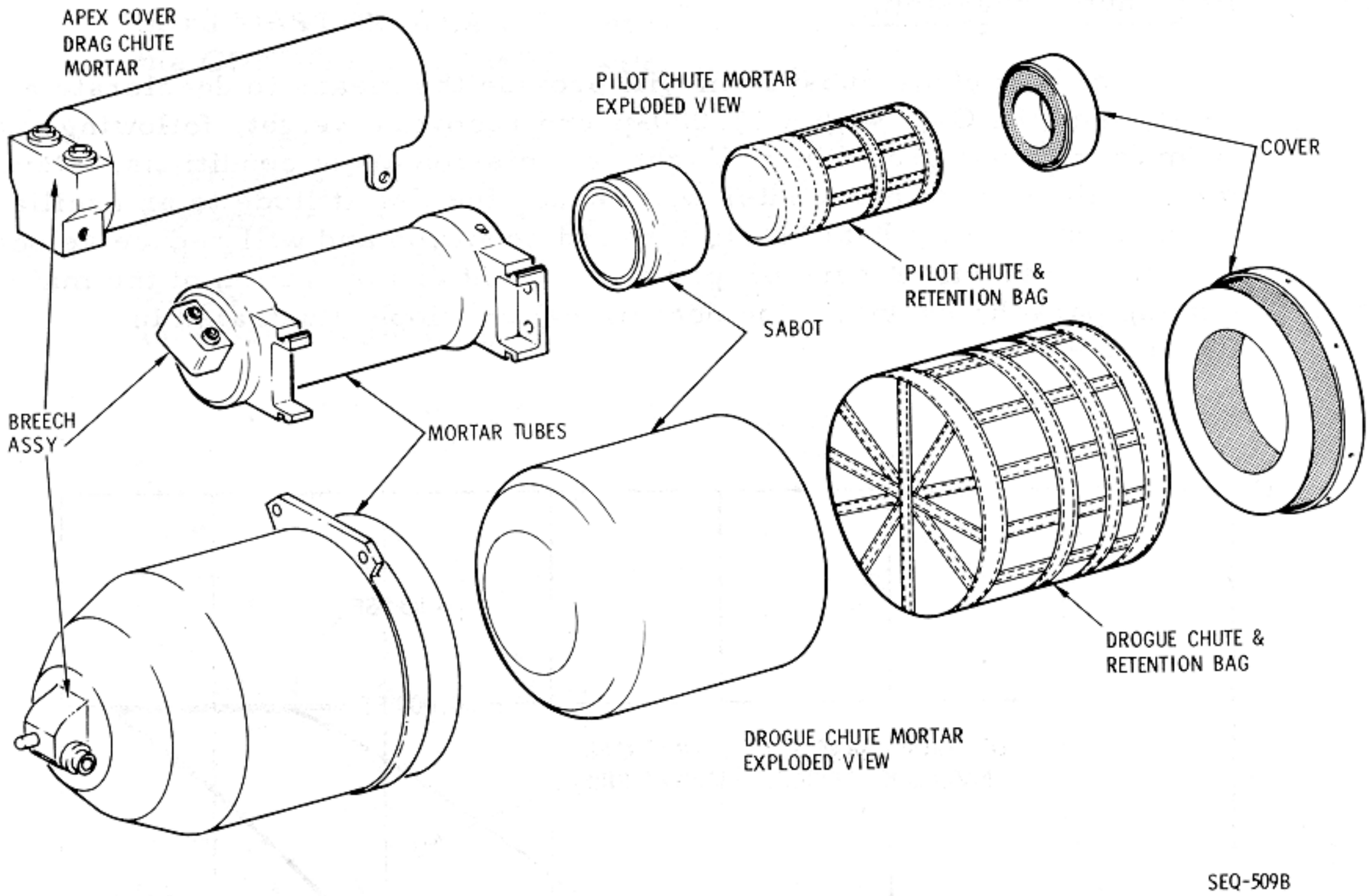

Figure 2.9-49. Parachute Mortar Assemblies

are riveted and, when the gas pressure causes the rivets to shear, the parachutes are ejected with considerable force.

2.9.5.13.4 Parachute Disconnect.

Five chisels are used to cut the risers of the drogue and main parachutes (figure 2.9-32). Gas-pressure cartridges are used to drive the chisels through the risers immediately above the point where they are swaged. Two initiators are used on each gas pressure cartridge.

SEQ

2.9.5.14 Reefing Line Cutters.

Reefing line cutters (figure 2.9-17) are designed to sever any coreless nylon cord with a breaking strength of 2000 pounds or less. The unit is mechanically initiated and provides a time elapse between initiation and the severing of the cord. The primer, time-delay train, and output charge are hermetically sealed. A storage life of 3 years in a temperature environment from 20° to 140°F is designed into the cutter. These cutters will not ignite or fire when subjected to a temperature of 275°F for one hour; however, a cutter is not required to perform after having been exposed to this temperature.

2.9.5.15 Parachute Subsystem.

The parachute subsystem will provide the means to decelerate and safely land the CM, with a 13,000-pound recovery weight, following entry from terrestrial orbit, lunar flight, or mission abort conditions. Deployment of the drogue parachutes will reduce the CM attitude to an oscillatory, or stable, aft heat shield forward condition and will reduce velocity to a point that will assure proper deployment and operation of the main landing parachutes within the operational envelope illustrated in figure 2.9-50.

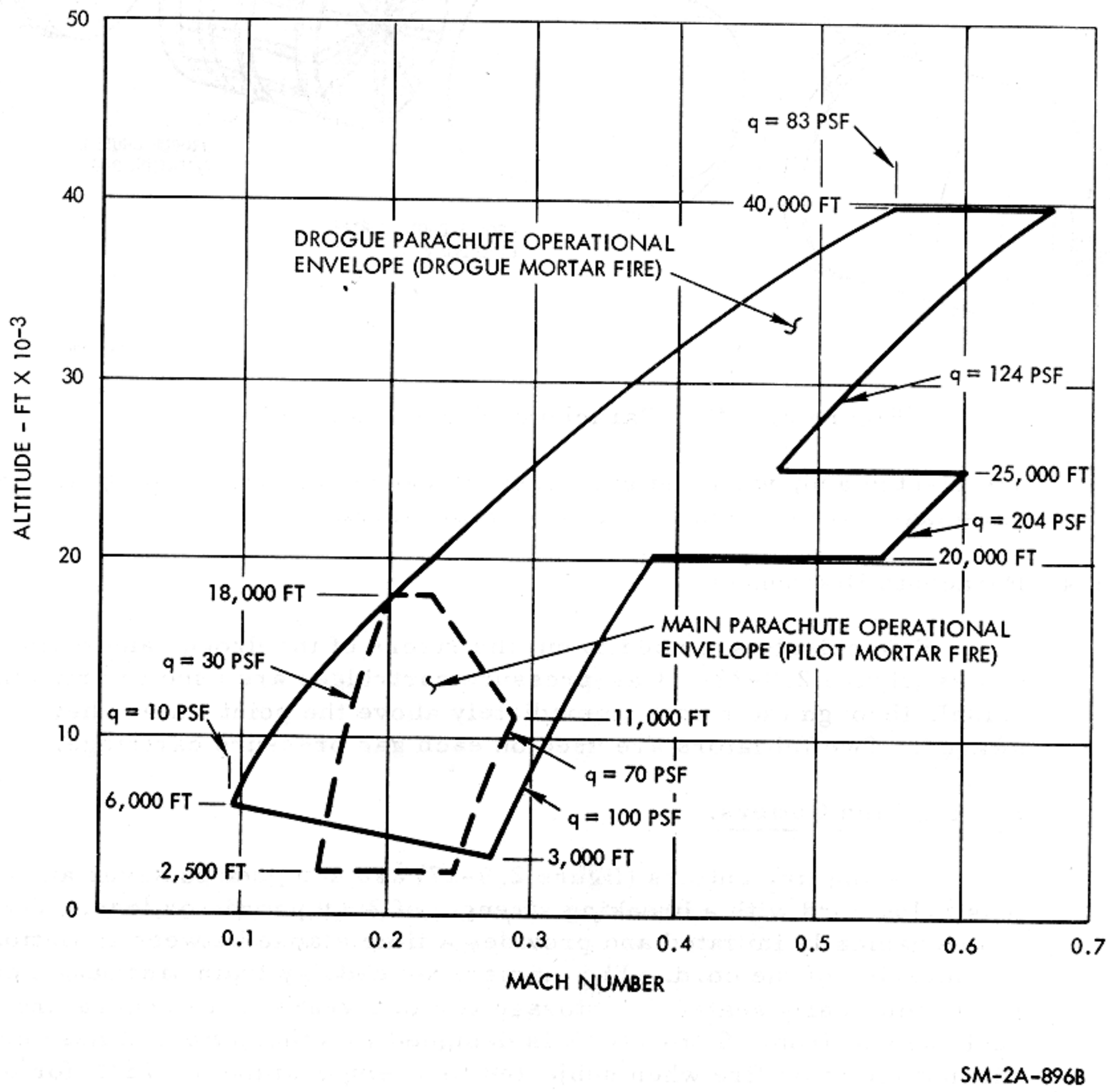

Figure 2.9-50. Parachute Design Envelope

2.9.6 OPERATIONAL LIMITATIONS AND RESTRICTIONS.

Since the sequential systems include numerous controls for manual backup and/or intervention of automated functions, and since several of the functions are time-critical, certain precautions should be observed. Moreover, considerable versatility has been designed into the systems, such as alternate electrical power selection. Serious damage could result if correct procedures are not followed.

2.9.6.1 Alternate Selection of Logic Power.

It would be possible to couple a defective battery to a good one, and serious damage to the electrical power supply could result if the circuit breakers, described in paragraph 2.9.4.1, are not utilized properly. The BAT C TO BAT BUS A and B circuit breakers (CB15 and CB24), zone 42-B, are included in the system to enable the utilization of ENTRY AND POST LANDING BATTERY C in the event of a power failure in either of the ENTRY AND POST LANDING BATTERIES A or B. If the contigency of alternate power utilization should occur, the defective battery should be isolated before the appropriate BAT C TO BAT BUS A or B circuit breaker is closed. Additional information on this subject is included in section 2.6, Electrical Power.

2.9.6.2 Alternate Selection of Pyro Power.

If the circuit breakers described in paragraph 2.9.4.2 are not utilized properly, serious damage to the electrical supply could result. The potential hazard is the same as described in paragraph 2.9.6.1 except in this instance the electrical power of the PYRO Systems, zones 41 through 43-D and -E, is concerned. The BAT BUS A and B TO PYRO BUS TIE circuit breakers (CB18 and CB19) are included in the system to be used in the event of a failure of PYRO BATTERY A or B. If such a power failure should occur, the appropriate SEQ A or B circuit breaker (CB16 or CB17) should be opened before coupling the appropriate ENTRY AND POST LANDING battery to the PYRO power system.

SEQ

2.9.6.3 Control for Arming Pyro Systems.

Battery power is required to arm or safe PYRO buses (paragraph 2.9.4.3). It is therefore necessary to close the SECS ARM BAT A circuit breakers (CB1), and/or its counterpart in system B, zone 39-C, before the motor switch (K1) in the LDEC, zones 39 and 40-E and -F, can be operated to energize or de-energize the PYRO buses. This feature is designed into the system for power conservation during a mission when the docking probe is being used. The procedures for the utilization of battery power for control of PYRO power will consequently differ somewhat during the various phases of a mission.

2.9.6.4 Status of Logic and Pyro Buses.

It will be necessary for the flight crew to verify the status of LOGIC and PYRO buses, i.e., armed or safe, through the MSFN. Displays for this status are not included in the CM.

2.9.6.5 Utilization of Controls for CSM/LV Separation.

When the CSM/LV SEP switch is used (paragraph 2.9.4.9), it should be held closed for approximately one second (0.8 second minimum) for the time-delay-relay logic to perform as it was designed.

2.9.6.6 Utilization of Controls for CM/SM Separation.

When the CM/SM SEP switches are used, they must be held closed for 0.1 of a second for the time-delay-relay logic to perform as it was designed (paragraph 2.9.4.13.1).

2.9.6.7 Manual Control of ELSC Functions.

Under certain entry conditions, erratic aerodynamic damping coefficients, wind gusts, and shears, the CM may become unstable. If this should occur, the apex cover and drogue parachutes may be manually deployed early. This will stabilize and keep the CM in the proper descending attitude. See figure 2.9-50 for the drogue deployment design envelope. The following precautions should be observed:

a. Manual initiation of drogue parachute deployment should never be accomplished above 40,000 feet during entry.

b. The CM RCS must be turned off prior to apex cover jettison.

c. Manual initiation of apex cover jettison must not be executed with the LET attached.

d. Manual initiation of drogue parachute deployment must not be executed with the apex cover on the vehicle.

e. Manual initiation of main parachute deployment must not be executed prior to drogue deployment.

f. Manual initiation of main parachute deployment must be accomplished above 2500 feet.

g. Two circuit breakers are incorporated in MESC PRYO circuits to the main parachute release ordnance devices. These circuit breakers should not be closed until after the CM has landed (paragraph 2.9.3.4.2.3).

h. It is impossible to release the main parachutes with the ELS switch in the MAN position. This switch must be in the AUTO position and the 14-second time delays in the ELSC (TD 3 and TD 4), zone 6-C, expired before the MAIN RELEASE switch is armed.

SECTION 2

SUBSECTION 2.10

CAUTION AND WARNING SYSTEM

2.10.1 INTRODUCTION.

The caution and warning system (C&WS) monitors critical parameters of most of the systems in the CM and SM. When a malfunction or out-of-tolerance condition occurs in any of these systems, the crew is immediately alerted in order that corrective action may be taken.

2.10.2 FUNCTIONAL DESCRIPTION.

Upon receipt of malfunction or out-of-tolerance signals, the C&WS simultaneously identifies the abnormal condition and alerts the crew to its existence. Each signal will activate the appropriate systems status indicator and a master alarm circuit. The master alarm circuit visually and aurally attracts the crew's attention by alarm indicators on the MDC and by an audio tone in the headsets. Crew acknowledgment of an abnormal condition consists of resetting the master alarm circuit, while retaining the particular systems status malfunction indication. The capability exists for the crew to select several modes of observing systems status and master alarm indicators and of monitoring CM or SM systems.

2.10.3 MAJOR COMPONENT/SUBSYSTEM DESCRIPTION.

The C&WS consists of one major component, the detection unit. It is located behind MDC-3, and therefore is neither visible nor accessible to the crew during the mission. The balance of the system is made up of visual indicators, aural alerting and associated circuits, and those switches required to control the various system functions. Visual indicators include the two uppermost fuel cell electromechanical event devices on MDC-3, as well as all systems status and master alarm lights.

The detection unit circuits consist of comparators, logic, level detectors, lamp drivers, and a master alarm and tone generator. Also incorporated are two redundant power supplies that furnish regulated +12 and -12 dc voltages for the electronics.

Inputs to the detection unit consist of both analog and event-type signals. The analog signals are in the 0- to 5-volt d-c range. Alarm limits for these signals trigger voltage comparators, which, in turn, activate logic and lamp-driver circuits. This causes activation of the master alarm circuit and tone generator, illumination of applicable systems status lights on MDC-2, and for certain measurements, activation

of applicable electromechanical event indicators on MDC-3. Several event inputs are monitored by the C&WS detection unit. These signals originate from solid state and mechanical switch closures in malfunction sensing devices. Certain signals will directly illuminate applicable system status lights and, through logic circuitry, activate the master alarm circuit and tone generator. Other event signals directly illuminate the system status lights, but require level detectors to activate the master alarm circuit. One event signal, originating within the detection unit, directly illuminates the C/W light, but activates only the MASTER ALARM switch lights of the master alarm circuit. One event signal, referred to as "CREW ALERT," originates from ground stations and enters through the UDL portion of the communications system. This system status light can only be extinguished by a second signal originating from the ground.

The master alarm circuit alerts crewmembers whenever abnormal conditions are detected. This is accomplished visually by the illumination of remote MASTER ALARM switch-lights on MDC-1 and -3, and the MASTER ALARM switch-light on LEB-122. An audio alarm tone, sent to the three headsets, aurally alerts the crew. The output signal of the tone generator is a square wave that is alternately 750 and 2000 cps, changing at a rate of 2.5 times per second. Although the tone is audible above the conversation level, it does not render normal conversation indistinct or garbled. When the crew has noted the abnormal condition, the alarm lights and the tone generator are deactivated and reset by pressing any one of the three MASTER ALARM switch-lights. This action leaves the systems status lights illuminated and resets the master alarm circuit for alerting the crew if another abnormal condition should occur. The individual systems status lights will remain illuminated until the malfunction or out-of-tolerance condition is corrected.

The C&WS power supplies include sensing and switching circuitry that ensure unit self-protection should high-input current, or high- or low-output voltage occur. Any of these conditions will cause the illumination of the master alarm lights and the C/W system status light. The tone generator, however, will not be activated because of requiring the 12-volt output from the malfunctioned power supply for its operation. The crew must then manually select the redundant power supply to return the C&WS to operation. This is accomplished by repositioning the CAUTION/WARNING-POWER switch on MDC-2. In so doing, the C/W status light is extinguished, but the master alarm circuit remains activated, thus requiring it to be reset.

Incorporated into the C&WS is the capability to test the lamps of systems status and master alarm lights. Position 1 of the CAUTION/WARNING-LAMP TEST switch tests the illumination of the left-hand group of status lights on MDC-2 and the MASTER ALARM switch-light on MDC-1. Position 2 tests the MASTER ALARM switch-light

on MDC-3 and the right-hand group of status lights on MDC-2. The third MASTER ALARM light is on LEB-122, and is tested by placing the CONDITION LAMPS switch on LEB-122 to TEST.

The position of the CAUTION/WARNING - CSM-CM switch (MDC-2) establishes the systems to be monitored. Before separation and entry, systems in both the CM and SM are monitored for malfunction or out-of-tolerance conditions with this switch in the CSM position. Positioning the switch to CM deactivates systems status lights and event indicators associated with SM systems.

The CAUTION/WARNING - NORMAL-BOOST-ACK switch (MDC-2) permits three modes of status and alarm light illumination. For most of the mission, the switch is set to the NORMAL position to give normal C&WS operation; that is, upon receipt of abnormal condition signals, all systems status lights and master alarm lights are capable of illumination. During the ascent phase, the switch is set to the BOOST position, so that although all other C&WS lights operate normally, the MASTER ALARM switch-light on MDC-1 will not illuminate. This prevents possible confusion on MDC-1 between the red MASTER ALARM light and the adjacent red ABORT light. The ACK switch position is selected when the crew desires to adapt their eyes to darkness, or if a continuously illuminated systems status light is undesirable. While in this mode, incoming signals will activate only the master alarm lights and the tone generator. To determine the abnormal condition, the crew must press either MASTER ALARM switch-light on the MDC. This illuminates the

applicable systems status light, and deactivates and resets the master alarm circuit. The systems status light will remain illuminated only as long as the switch-light is depressed. However, it may be re-called as long as the abnormal condition exists by again pressing either switch-light.

A stowable tone booster is added to the caution and warning system to allow all three astronauts to sleep simultaneously with the headsets removed. Stowage of this unit during non-use periods will be under locker A3.

The unit consists of a power plug, tone booster, and a photo-sensitive device which can be used on the left or right side of the command module. The power connection is made to the UTILITY receptacle on MDC-15 or 16. The tone booster, which provides an audible signal, is mounted by velcro pad to the left-hand or right-hand girth shelf. The photo-sensitive device, which is sensitive only to the MASTER ALARM lamp, is mounted on the left- or right-hand crew couch so it monitors the MASTER ALARM on MDC-1 or 3.

Since the MASTER ALARM is triggered by any caution/warning monitored symptom, it will activate the tone booster until the MASTER ALARM is extinguished by a manual reset. In the event of a caution/warning system power supply failure, this unit will provide the audio alarm.

2.10.3.1 Electrical Power Distribution.

The C&WS receives power from MNA & MNB buses. (See figure 2.10-1.) Two circuit breakers are located on MDC-5. Closure of either circuit breaker will allow normal system operation.

2.10.4 OPERATIONAL LIMITATIONS AND RESTRICTIONS.

2.10.4.1 C&WS General Data.

With the CAUTION/WARNING - NORMAL-BOOST-ACK switch in the BOOST position during ascent, the MASTER ALARM switch-light on MDC-1 will not illuminate should a malfunction occur. The master alarm circuit reset capability of the light is also disabled during this time. This requires the MASTER ALARM switch-light on MDC-3 to be used exclusively for monitoring and resetting functions during boost. Several

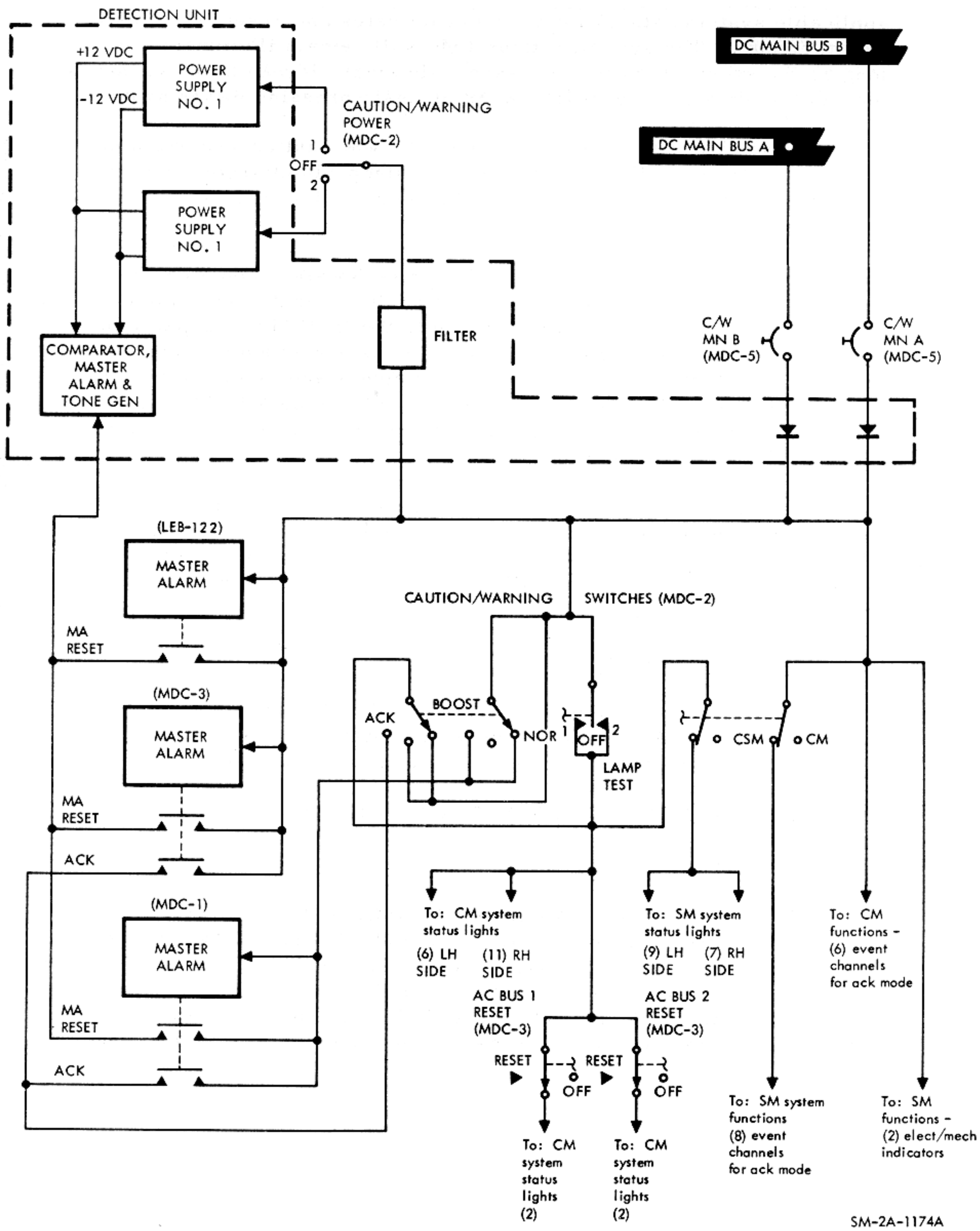

Figure 2.10-1. C&WS Power Distribution Diagram

peculiarities should be noted in regard to the CAUTION/WARNING - POWER switch. Whenever this switch is moved from or through the OFF position to either power supply position, the master alarm circuit is activated, which then requires it be reset. Also, switching from one power supply to another (when there is no power supply failure) may cause the C/W system status light to flicker as the switch passes through the OFF position.

Should the redundant power supply also fail, the C&WS is degraded to the extent that the complete master alarm circuit, as well as those system status lights that illuminate as the result of analog-type input signals, are rendered inoperative. This leaves only those status lights operative that require event-type input signals. They inlcude the following SM and CM lights: CMC, ISS, BMAG 1 TEMP, BMAG 2 TEMP, SPS ROUGH ECO, PITCH GMBL 1, PITCH GMBL 2, YAW GMBL 1, YAW GMBL 2, O_2 FLOW HI, FC BUS DISCONNECT, AC BUS 1, AC BUS 1 OVERLOAD, AC BUS 2, AC BUS 2 OVERLOAD, MN BUS A UNDERVOLT, MN BUS B UNDERVOLT, and CREW ALERT. The C/W light will be operative only while the CAUTION/WARNING - POWER switch is in position 1 or 2.

The CAUTION/WARNING - CSM-CM switch must be in the CSM position in order to conduct a lamp test of those system status lights associated with SM systems. The status lights of CM systems may be tested with the switch in either position. Circuit design permits a complete lamp test to be conducted with the CAUTION/WARNING switch in the NORMAL or ACK position only. In the BOOST position, all lamps except those of the MASTER ALARM light on MDC-1 may be tested.

Normally, each abnormal condition signal will activate the C&WS master alarm circuit and tone generator, and illuminate the applicable systems status light. One exception to this concept is when a system status light has been activated by one of several signals and the MASTER ALARM has been reset. Any additional out-of-tolerance condition or malfunction, associated with the same system status light, will not activate the MASTER ALARM unless the first condition has been previously corrected.

Each crewmember has a power switch on his audio control panel which will enable or prevent the tone signal from entering his headset. The AUDIO-TONE position allows the signal to pass on to the headset while the AUDIO position inhibits the signal.

2.10.4.2 System Status Light Data.

The following list provides the lamp trigger values and associated information for all system status lights on MDC-2.

SYSTEMS DATA

System Status Lights	Trigger Values	Other Indications (Lights, Gauges, Meters, etc.)	CM or SM	Remarks
BMAG 1	1. Any BMAG <168°F 2. Any BMAG >172°F	None	CM	If activated, the BMAG POWER switch should be left in WARM UP until light is extinguished.
BMAG 2	Same as BMAG 1			
CO_2 PP HI	At 7.6 mm Hg	PART PRESS CO_2 meter (MDC-2)	CM	
PITCH GMBL 1	Overcurrent conditions dependent on time and temperature.	None	SM	
YAW GMBL 1	Same as PITCH GMBL 1	None		
PITCH GMBL 2	Overcurrent conditions dependent on time and temperature.	None	SM	
YAW GMBL 2	Same as PITCH GMBL 2	None		
CRYO PRESS	1. Tank 1 O_2 <800 psia	CRYOGENIC TANKS - PRESSURE-O_2-1 meter (MDC-2)	SM	
	2. Tank 1 O_2 >950 psia			
	3. Tank 2 O_2 - Same as tank 1 O_2	CRYOGENIC TANKS - PRESSURE-O_2-2 meter (MDC-2)		
	4. Tank 1 H_2 <220 psia	CRYOGENIC TANKS - PRESSURE-H_2-1 meter (MDC-2)		
	5. Tank 1 H_2 >270 psia			
	6. Tank 2 H_2 - Same as tank 1 H_2	CRYOGENIC TANKS - PRESSURE-H_2-2 meter (MDC-2)		
GLYCO TEMP LOW	At -30°F	ECS RADIATOR TEMP - PRIM-OUTLET meter (MDC-2)	CM	Indication is for primary water glycol system only.
CM RCS 1	1. He manf press <260 psia	CM RCS - PRESS-MANF meters (MDC-2)	CM	Light functional only when CAUTION/ WARNING - CSM-CM switch is in CM position
	2. He manf press >330 psia			
CM RCS 2	Same as CM RCS 1			
SM RCS A	1. Pkg temp <75°F	SM RCS - TEMP PKG meter (MDC-2)	SM	
	2. Pkg temp >205°F			
	3. Sec fuel press <145 psia	SM RCS - PRESS-SEC-FUEL meter (MDC-2)		
	4. Sec fuel press >215 psia			
SM RCS B	Same as SM RCS A			
SM RCS C	Same as SM RCS A			

SYSTEMS DATA

System Status Lights	Trigger Values	Other Indications (Lights, Gauges, Meters, etc.)	CM or SM	Remarks
SM RCS D	Same as SM RCS A			
FC 1	1. H_2 flow >0.16 lb/hr	FUEL CELL - FLOW-H_2-O_2 indicator (MDC-3)	SM	Event indicators (elec/mech) pH HI, and FC RAD TEMP LOW are activated at lamp trigger values.
	2. O_2 flow >1.27 lb/hr			
	3. Skin temp <360°F	FUEL CELL - MODULE TEMP-SKIN indicator (MDC-3)		
	4. Skin temp >475°F			
	5. Cond exh <155°F	FUEL CELL - MODULE TEMP-COND EXH indicator (MDC-3)		
	6. Cond exh >175°F			
	7. At pH factor of 9	pH HI event indicator (MDC-3)		
	8. Rad out temp below -30°F	FC RAD TEMP LOW event indicator (MDC-3)		
FC 2	Same as FC 1			
FC 3	Same as FC 1			
INV 1 TEMP HI	At >190°F	None	CM	
INV 2 TEMP HI	Same as INV 1 TEMP HI			
INV 3 TEMP HI	Same as INV 1 TEMP HI			
SPS PRESS	1. Fuel tk He press <157 psia	SPS PRPLNT TANKS - PRESS-FUEL meter (MDC-3)	SM	
	2. Fuel tk He press >200 psia			
	3. Ox tk He press - Same as fuel tank He press	SPS PRPLNT TANKS - PRESS-OXID meter (MDC-3)		
AC BUS 1	1. At 95±3 vac <	AC VOLTS meter (MDC-3)	CM	
	2. At 130±2 vac >			Overvoltage disconnects inverter from bus.
AC BUS 2	Same as AC BUS 1			
FC BUS DISCONNECT	1. Forward current >75 amps	DC INDICATORS - FC 1, 2 & 3 (MDC-3)	SM	DC AMPS meter (MDC-3)
	2. Reverse current >4 amps for 1 to 10 seconds			

C&WS

SYSTEMS DATA

System Status Lights	Trigger Values	Other Indications (Lights, Gauges, Meters, etc.)	CM or SM	Remarks
AC BUS 1 OVERLOAD	1. 3Ø at 27 amps for 15±5 seconds 2. 1Ø at 11 amps for 5±1 seconds	AC VOLTS meter (MDC-3)	CM	
AC BUS 2 OVERLOAD	Same as AC BUS 1 OVERLOAD			
CMC	1. Loss of prime power 2. Scaler fail - if scaler stage 17 fails to produce pulses 3. Counter fail - continuous requests or fails to happen following increment request 4. SCADBL - 100 pps scaler stage >200 pps 5. Parity fail - accessed word, whose address is octal 10 or greater, contains even number of ones 6. Interrupt too long or infrequent - 140 to 300 ms 7. TC trap - too many TC or TCF instructions, or TCF instructions too infrequent 8. Night watchman - computer fails to access address 67 within 64 to 1.92 seconds 9. V fail - 4v supply >4.4v 4v supply <3.6v 14v supply >16.0v 14v supply <12.5v 28v supply <22.6v 10. If oscillator stops 11. Stand by	CMC light illuminated (LEB-122) RESTART & PGNS lights illuminated if restart and standby exist in CMC	CM	Items 5 through 11 will cause restart in the CMC.
CREW ALERT	Activated by real-time command from ground stations through the UDL	None	N/A	System status light must be extinguished by ground command
MN BUS A UNDERVOLT	At 26.25±0.1 vdc	DC VOLTS meter (MDC-3)	CM	
MN BUS B UNDERVOLT	Same as MN BUS A UNDERVOLT			

SYSTEMS DATA

System Status Lights	Trigger Values	Other Indications (Lights, Gauges, Meters, etc.)	CM or SM	Remarks
ISS	1. IMU fail a. IG servo error >2.9 mr for 2 seconds b. MG servo error >2.9 mr for 2 seconds c. OG servo error >2.9 mr for 2 seconds d. 3200 cps <50% e. 800 wheel supply <50%	ISS light illuminated (LEB-122)	CM	IMU fail signal inhibited by CMC when in coarse align mode.
	2. PIPA fail a. No pulse during 312.5-ms period b. If both + and - pulses occur during 312.5-ms period c. If no + and - pulses occur between 1.28 to 3.84 seconds	PIPA fail will also illuminate PGNC lights and PROGRAM light on DSKY		PIPA fail signal inhibited by CMC except during CMC controlled translation or thrusting.
	3. CDU fail a. CDU fine error >1.0v rms b. CDU coarse error >2.5v rms c. Read counter limit >160 cps d. Cos $(\theta - \psi)$ <2.0v e. +14 dc supply <50%			CDU fail signal by CMC during CDU zero mode.
C/W	1. At +11.7 or -11.7 vdc 2. At +13.9 or -13.9 vdc	None	CM	Alarm tone inoperative.
O_2 FLOW HI	1.0 lb/hr for 16 sec	O_2 FLOW meter (MDC-2)	CM	
SUIT COMPRESSOR	ΔP across inlet and outlet <0.22 psia	SUIT COMPR ΔP meter (MDC-2)	CM	

C&WS

SECTION 2

SUBSECTION 2.11

MISCELLANEOUS SYSTEMS DATA

2.11.1 INTRODUCTION.

Miscellaneous systems data pertain to items that are not covered in other systems. These items consist of timers, accelerometers (G-meter), and uprighting system.

2.11.2 TIMERS.

Two mission timers (electrical) and two event timers (electrical/mechanical) are provided for the crew in the command module. One mission timer is located on panel 2 of the MDC and the other on panel 306 in the left-hand forward equipment bay. Each mission timer has provisions for manually setting the readout (hours, minutes, and seconds), and the capability of starting, stopping, and resetting to zero. The numerical elements are electroluminescent lamps and the intensity is controlled by the NUMERICS light control on panels MDC-8 and LEB-100. The event timers are located on MDC-1 and -306 in the left-hand forward equipment bay, and provide the crew with a means of monitoring and timing events. All timers reset and start automatically when lift-off occurs, and the timer located on MDC-1 will be automatically reset and restarted if an abort occurs. The event timers are integrally illuminated by an internal electroluminescent lamp and controlled by the INTEGRAL light controls located on MDC-8 and LEB-100. (For further information, refer to section 3.)

2.11.3 ACCELEROMETER (G-METER).

The accelerometer or G-meter (MDC-1) provides the crew with a visual indication of spacecraft positive and negative G-loads. This meter is illuminated by an internal electroluminescent lamp and controlled by the INTEGRAL light control on MDC-8. For additional information, refer to section 3.

2.11.4 COMMAND MODULE UPRIGHTING SYSTEM.

The CM uprighting system is manually controlled and operated after the CM has assumed a stable, inverted floating attitude. The system consists of three inflatable air bags, two relays, three solenoid-control valves, two air compressors, control switches, and air lines. The inflatable bags are located in the CM forward compartment and the air compressors in the aft compartment. The control switches and circuit breakers are located in the crew compartment. The switches control relays which are powered by the postlanding bus and the relays control power to the compressors which are powered by battery buses A and B. (See figure 2.11-1.)

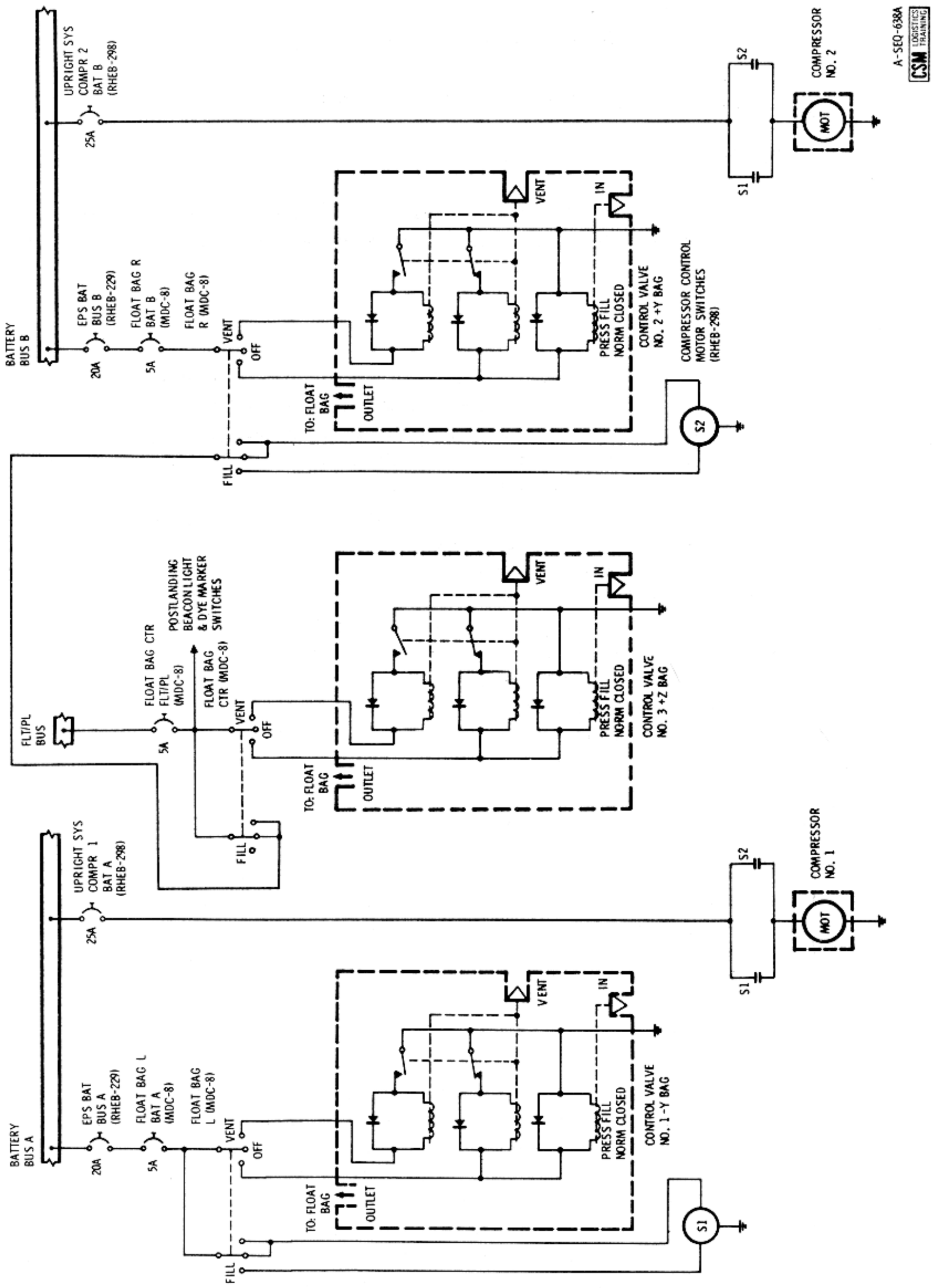

Figure 2.11-1. Uprighting System Electrical Schematic

2.11.4.1 Functional Description.

FLOAT BAG 1L switch controls inflation of the air bag on -Y axis, switch 2R controls inflation of the air bag on the +Y axis, and switch 3 CTR controls inflation of the air bag on the +Z axis of the CM. (See figure 2.11-1.) Each bag is 43 inches in diameter and has a capacity of approximately 24 cubic feet when inflated. If the CM becomes inverted after landing, the crewmember at station 1 initiates filling of the three bags by setting the FLOAT BAG 1L, 2R, and 3 CTR switches to FILL. When the CM is uprighted, the three FLOAT BAG switches will be set to OFF. A 4.25±0.25-psi relief valve is located in the inlet of each bag. Backup relief valves set at 13.5 psi are located in the outlet of each compressor.