This document and all information and data herein or herewith are confedencial and propriertary property of University of Agder and are not to be used, reproduced or disclosed in whole or in part by anyone without the written permission of University of Agder

Tolerances exept where noted:
ISO 2768-1 (c), ISO 2768-2 (K) & ISO 13920 BF

REV.	DESCRIPTION OF REVISION	CHECKER	APPROVER	DATE/SIGN
01	ISSUED FOR CONSTRUCTION	INI	INI	DD.MM.YYY/INI

ITEM	QTY.	PART NUMBER	DESCRIPTION	UNIT WEIGHT [kg]
1	1	500003		220.40
2	1	500002		105.96

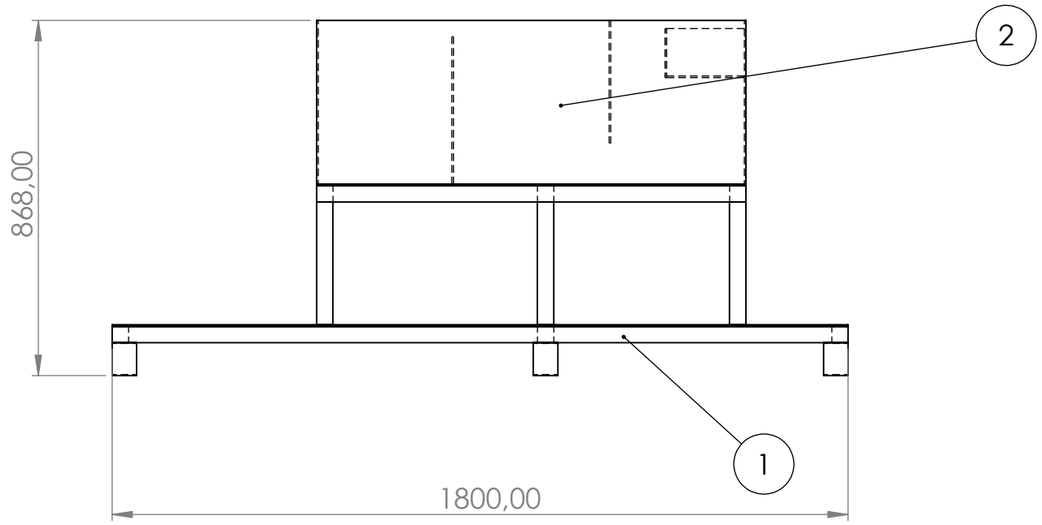

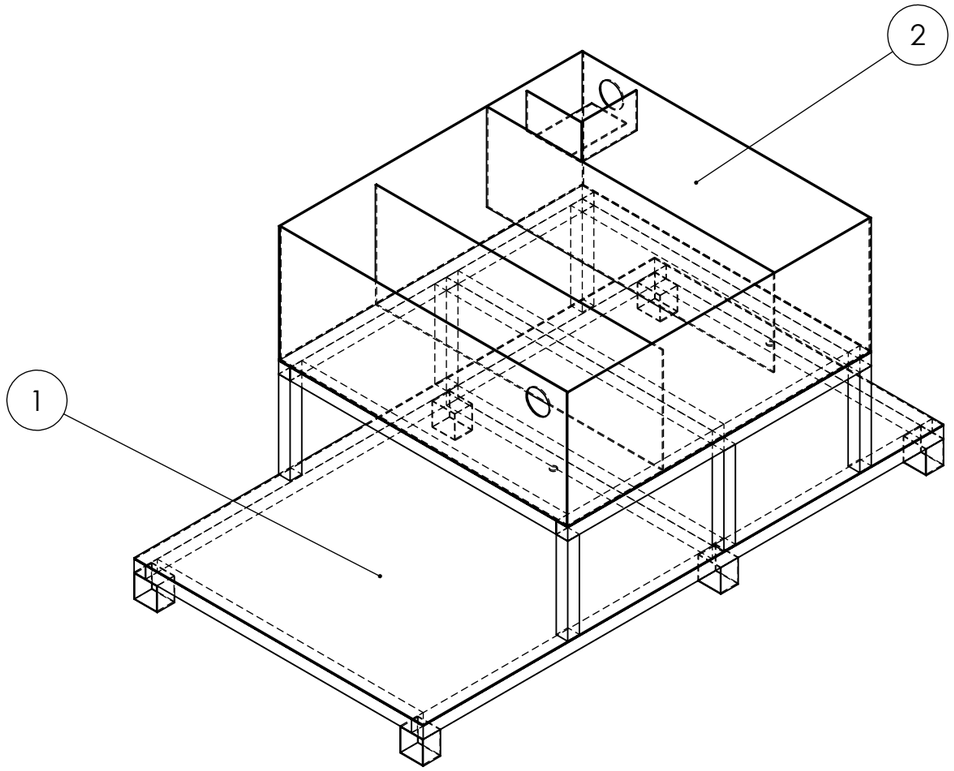

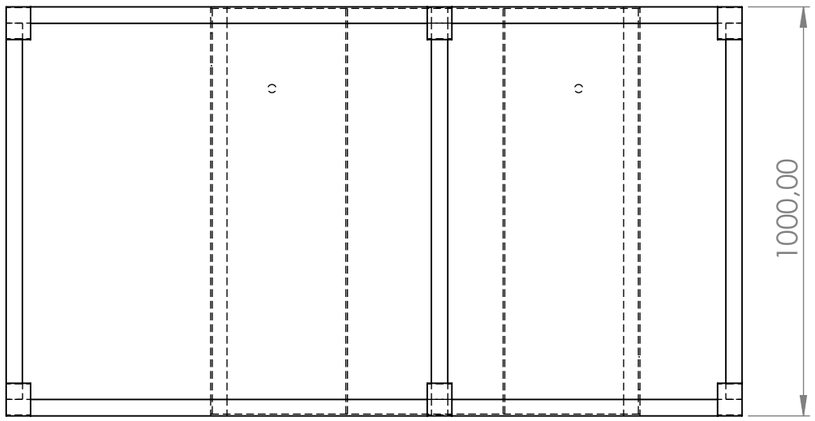

All measurements are in mm U.N.O.
Deburr & remove all sharp edges.

Projection:

DO NOT SCALE DRAWING

REVISION:

Universitetet i Agder

	NAME	SIGNATURE	DATE
DRAWN			
CHK'D			
APPV'D			
Q.A			

FINISH:
REPLACES:
REPLACED BY:

TITLE:

Spesification:

DWG NO. 500001

A3

WEIGHT: 326.36 KG

SCALE:1:15

SHEET 1 OF 1

SOLIDWORKS Educational Product. For Instructional Use Only.