Latest updates: https://dl.acm.org/doi/10.1145/3664647.3688983

RESEARCH-ARTICLE

Vigo: Audiovisual Fake Detection and Segment Localization

DIEGO PÉREZ-VIEITES, Galicia Telecommunications Technology Center, Vigo, Galicia, Spain

JUAN JOSÉ MOREIRA-PÉREZ, Galicia Telecommunications Technology Center, Vigo, Galicia, Spain

ÁNGEL ARAGÓN-KIFUTE, Galicia Telecommunications Technology Center, Vigo, Galicia, Spain

RAQUEL ROMÁN-SARMIENTO, Galicia Telecommunications Technology Center, Vigo, Galicia, Spain

RUBÉN CASTRO-GONZÁLEZ, Galicia Telecommunications Technology Center, Vigo, Galicia, Spain

Open Access Support provided by:

Galicia Telecommunications Technology Center

PDF Download
3664647.3688983.pdf
19 February 2026
Total Citations: 4
Total Downloads: 3149

Published: 28 October 2024

Citation in BibTeX format

MM '24: The 32nd ACM International Conference on Multimedia
October 28 - November 1, 2024
Melbourne VIC, Australia

Conference Sponsors:
SIGMM

MM '24: Proceedings of the 32nd ACM International Conference on Multimedia (October 2024)
https://doi.org/10.1145/3664647.3688983
ISBN: 9798400706868

Vigo: Audiovisual Fake Detection and Segment Localization

Diego Pérez-Vieites
Gradiant
Vigo, Spain
dperez@gradiant.org

Juan José Moreira-Pérez*
Gradiant
Vigo, Spain
jmoreira@gradiant.org

Ángel Aragón-Kifute
Gradiant
Vigo, Spain
aaragon@gradiant.org

Raquel Román-Sarmiento
Gradiant
Vigo, Spain
rroman@gradiant.org

Rubén Castro-González
Gradiant
Vigo, Spain
rcastro@gradiant.org

Abstract

Recent years have seen a revolution in the creation of synthetic multimedia content. Algorithms with the ability to generate truly convincing images, videos, text and audio capable of fooling any human being. In addition to the possible beneficial uses that this type of technology may have, we must highlight the danger of its misuse for criminal or fraudulent activities. Deepfakes stand out as an example of a potentially dangerous use of these technologies, since they facilitate identity theft and the generation of misinformation. Current solutions are not capable of detecting this type of fake content with sufficient reliability. Therefore, it is crucial to develop new algorithms that solve this problem.

This paper presents two methods focusing on the classification and localization of deepfake videos taking into account audio and visual information. These methods were submitted to the ACM 1M Deepfakes Detection Challenge, achieving the highest score in the temporal localization task and a top-five ranking in the classification task.

CCS Concepts

• **Computing methodologies → Artificial intelligence**.

Keywords

Digital Forensics, Computer Vision, Deepfake Detection, Deepfake Localization, TFL

ACM Reference Format:
Diego Pérez-Vieites, Juan José Moreira-Pérez, Ángel Aragón-Kifute, Raquel Román-Sarmiento, and Rubén Castro-González. 2024. Vigo: Audiovisual Fake Detection and Segment Localization. In *Proceedings of the 32nd ACM International Conference on Multimedia (MM '24), October 28-November 1, 2024, Melbourne, VIC, Australia.* , 5 pages. https://doi.org/10.1145/3664647.3688983

*Diego Pérez-Vieites and Juan José Moreira-Pérez authors contributed equally

Permission to make digital or hard copies of all or part of this work for personal or classroom use is granted without fee provided that copies are not made or distributed for profit or commercial advantage and that copies bear this notice and the full citation on the first page. Copyrights for components of this work owned by others than the author(s) must be honored. Abstracting with credit is permitted. To copy otherwise, or republish, to post on servers or to redistribute to lists, requires prior specific permission and/or a fee. Request permissions from permissions@acm.org.
MM '24, October 28-November 1, 2024, Melbourne, VIC, Australia
© 2024 Copyright held by the owner/author(s). Publication rights licensed to ACM.
ACM ISBN 979-8-4007-0686-8/24/10
https://doi.org/10.1145/3664647.3688983

1 Introduction

Problems involving the modification of multimedia files (audio, images and video) and the generation of synthetic data are not new but have become more serious due to recent advances in the field of generative artificial intelligence. A particularly worrying aspect within the field of synthetic or falsified data is the generation of deepfakes, given the direct implications for fraud, identity theft and desinformation campaigns. Scams that take advantage of audio and video deepfake techniques are becoming more frequent [1] [2].

Current tools are able to produce hyper-realistic results without leaving the traces typically used by traditional digital forensics methods, making these conventional techniques ineffective [2]. Consequently, there is an urgent need to develop novel methods capable of countering this new wave of generative technologies. Recent studies have shown that neural network-based solutions outperform traditional algorithms, suggesting that deep learning is the most promising path to addressing these increasingly complex challenges. Although deep learning has shown superior results, it requires a large amount of data. Therefore, the availability of large databases is crucial to advance detection systems. Consequently, large databases such as DFDC [10], LAV-DF [6] and, more recently, AV-Deepfake [4] have been introduced in recent years. Additionally, several challenges have been established to promote academic and industry efforts to address the complex problem of detecting audio and video deepfakes.

To address the aforementioned problem, this article presents two methods for carrying out detection and temporal localization in deepfake videos and audios. These methods have been presented to the ACM MM 1M Deepfakes Detection Challenge [3] [3], where they performed well in both tasks and attained the highest score in the localization task.

The main contributions are as follows:

- A new proposal based on a multilayer perceptron (gMLP)-based [14] approach that processes audio and video features extracted using Wav2Vec2.0 [1] and the Temporal Segment Network (TSN) [27].
- A new proposal for a deepfake temporal localization system, based on the aforementioned audio and video features.
- The use of various fusion strategies to optimize results.

[1] https://www.euronews.com/business/2024/04/10/its-a-scam-how-deepfakes-and-voice-cloning-taps-into-your-cash
[2] https://edition.cnn.com/2024/02/04/asia/deepfake-cfo-scam-hong-kong-intl-hnk/index.html
[3] https://deepfakes1m.github.io/

2 Related Work

The term Deepfakes refers to all fake multimedia content created using Deep Learning technology. It includes different types of attacks such us: i) entire face synthesis [12], which consists of the creation of new facial images with non-existing identities; ii) identity swap [13], which consists of replacing the face of a subject in a video (source) with that of another subject (target); iii) face morphing [18], which consists of the creation of new identities from the combination of two or more subjects; iv) attribute manipulation [8], which consists of modifying some facial attributes, such as hair color, gender, adding glasses, etc.; v) expression swap [19], which consists of modifying the facial expression of the subject (source) with that of another subject (target); and vi) audio-to-video and text-to-video [22], which consists of the synthesis of new videos in which the person's facial expression is modified from an input audio or text. This diversity of attacks makes the problem extremely complex and the approaches to solving the problems are many and very varied [24]. Most recent studies employ spatial feature extraction using Convolutional Neural Networks (CNN) [23] or temporal features extraction using Recurrent Neural Networks (RNN) [25] models to detect deepfake media. On the other hand, traditional methods have predominantly focused on analyzing intrinsic statistical patterns and manually engineered cues, such as eye blinking [11], head pose [16], and visual anomalies [9].

Deepfake audio detection is closely related to audio spoofing attacks and synthetic audio detection. With the popularization of speaker verification systems, interest has increased in investigating methods to improve their robustness by identifying spoofing attacks, whether physical or logical. Generally, attack detection methods follow a scheme where the audio signal is passed through a feature extractor that calculates a numerical representation of the signal, which in turn is passed to a classifier that is responsible for taking the decision whether the voice signal is genuine or an attack. The most widely used feature extraction methods are Mel Frequency Cepstral Coefficients (MFCC), Linear Frequency Cepstral Coefficients (LFCC), Energy Separation Algorithm-Instantaneous Frequency Cepstral Coefficients (ESA-IFCC), Constant-Q Cepstral Coefficients (CQCC) and Cochlear Filter Cepstral Coefficients Instantaneous Frequency (CFCCIF). Regarding classifiers, the most widely used are Support Vector Machines (SVM) and Gaussian Mixture Model (GMM), quite popular within classic machine learning. Nevertheless, the most recent studies use deep neural networks for classification, either using the aforementioned classical spectral features or letting the network itself learn the appropriate feature space through feature learning [29].

Temporal Deepfake Localization has not been the focus of much research. Nevertheless, approaches exist to solve a similar problem, such us Temporal Forgery Localization (TFL) [6] or Temporal Action Recognition (TAL) [26]. Some of the state-of-the-art TAL and TFL algorithms were tested [4] in the ACM 1M Deepfake Challenge: UMMAFormer [32] with InternVideo2.0 [28] for visual feature extraction and BYOL-A [17] for audio feature extraction showed the best performance.

3 Methodology

3.1 Overview

The proposed methods were developed according to the 1M Deepfakes Detection Challenge guidelines. This challenge consists of two main tasks to be performed on the AV-Deepfake:

- Task 1: Given an audiovisual sample containing a single speaker, the task is to identify whether the video is real or fake. Participants in this task could only use the video-level label to train the model.
- Task 2: Given an audiovisual sample containing a single speaker, the task is to find out the timestamps [start, end] at which the manipulation is performed. The goal is to temporally localize false segments in videos with access to full-level labels. Participants in this task could access segment-level labels, which contain the timestamps of the fake segments.

Our approach consists of two methods: First, we aim to detect deepfake videos at video level by classifying them as real or fake. A video is classified as real if there is no fake segment in the video, and as fake otherwise, with the added difficulty of using only video-level labels. Second, we address the temporal localization of fake segments within videos. This involves obtaining the timestamps of the corresponding fake segments.

3.2 Deepfake Classification

Our classification method $VIGO_{class}$ includes an audio-video stream, a video stream, and a final fusion stage, as shown in Figure 1.

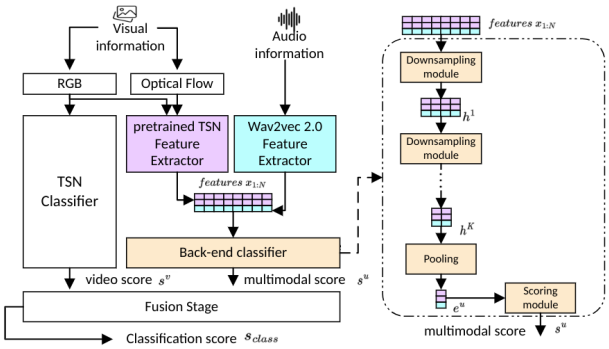

Figure 1: The proposed VIGO-class architecture for Deepfake video classification tasks.

The first network $VIGO_{class-mm}$ is based on the detector by Zhang et al. [31] originally proposed for detecting short fake speech segments embedded in an utterance and consists of a front-end to extract discriminative features and a back-end to identify spoofed segments at multiple temporal resolutions. The original method was intended to detect audio manipulations only, using popular state-of-the art audio feature extractors like Wav2Vec [20] and WavLM [7]. To add support for multimodal (audio and video) input information manipulations, we have modified the front-end to concatenate the original audio features with video features from Temporal Segment Networks (TSN). In our experiments we have used a Wav2Vec 2.0 Large along with the TSN features, as it was

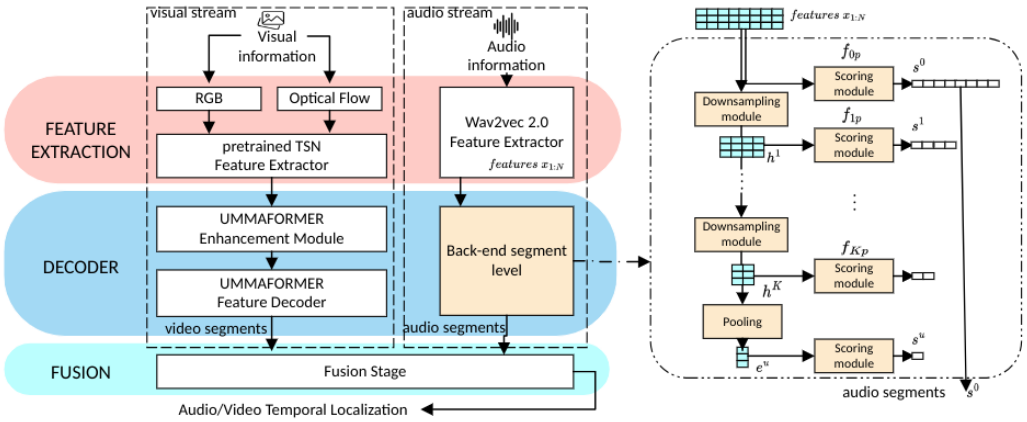

Figure 2: The proposed VIGO-loc architecture for Temporal Deepfake Localization tasks.

empirically determined to have the best performance. The combined feature vectors have a length of 5120 (1024 Wav2Vec + 4096 TSN). Video features have a lower temporal resolution than audio features, so linear interpolation is applied to the former to match the temporal resolution of the latter, which is 20 ms for 16 kHz audio.

The back-end computes a multimodal-level score s^u as shown in Figure 1. The input features $x_{1:N}$ are repeatedly downsampled. The hidden feature sequences h^K at the lowest temporal resolution are pooled into the multimodal embedding vector e^u, which is then transformed into the multimodal score s^u through the scoring module.

The downsampling modules contain a max-pooling operator with a stride of 2, followed by a 1D convolution layer with a kernel size of 1 and equal number of output and input channels. This means that the temporal resolution is halved after each downsampling module.

Finally, the scoring module comprises 5 gated multilayer perceptron (gMLP) blocks. These blocks are based on basic Multilayer Perceptrons (MLPs) with a gating unit and have shown to perform as well as Transformers in key language and vision applications [14]. The result is a first classification score s^u.

The second network $TSN-RGB$ uses the TSN classifier which is trained from scratch using just the RGB information. This network extracts short fragments from a long video sequence using a distributed sampling scheme along the temporal dimension. A segmental structure is then used to aggregate information from these fragments. This approach allows temporal segment networks to effectively model temporal structures in long videos. Furthermore, the sampling strategy retains relevant information at a significantly low cost, optimizing time and computing resources. With this network we obtain a second score, s^v, based solely on visual information.

The fusion stage was carried out with a scheme that weights the scores based on their ranges and distribution to give the same importance to both classifiers. Empirically, it has been determined that the best weighting is $s_{class} = \frac{s^v + 0.75(1+s^u)}{2.0}$.

3.3 Deepfake Localization

We propose $VIGO_{loc}$ method which uses two different networks, one for audio stream information and another for visual stream information as shown in Figure 2.

Our audio stream network for the temporal deepfake localization task is also based on Zhang et al. [14]. In this case, we are leveraging the full architecture and not only the video-level scoring module.

Given the input features, the back-end computes segment-level scores at multiple temporal resolutions by learning multiple functions $\{f_{0p}, f_{1p},, f_{Kp}\}$, where the function f_{Kp} converts $x_{1:N}$, or the hidden features h^i with $\forall i \in 0, \ldots, K$ to segment-level scores $s_{k1:M_k}$ at the $k-th$ temporal resolution, $\forall k \in 0, \ldots, K$. As illustrated in Figure 2, the back-end computes $s_{1:M}$ at different temporal resolutions in a fine-to-coarse order. First, the input features $x_{1:N}$ are used to compute the score sequence $s_0 \in \mathbb{R}^N$ at the frame level, which is the finest temporal resolution supported by the feature extractor. The $n-th$ score $s^0(n)$ indicates the likelihood that the $n-th$ frame is fake. Next, $x_{1:N}$ is downsampled to h^1 and used to compute s^1. This process is repeated to compute segment-level scores for each temporal resolution.

The architecture of the downsampling and scoring modules is the same for all the temporal resolutions and equal to the modules mentioned in section 3.2.

In this case the best overall results are obtained using the original audio-only detection method, using a Wav2Vec 2.0 Large for feature extraction and considering the scores for the finest temporal resolution possible s^0 (20 ms for 16KHz audio).

Our visual method is based on UMMAFormer proposed by Zhang, Rui et al. [32], which is an innovative method designed to address the challenge of temporal forgery localization in multimedia content. This framework uses the transformer architecture to efficiently manage multimodal inputs, such as video and audio, allowing for the detection of forgeries across temporal and spatial dimensions.

We have kept TSN for feature extraction, with the optical flow and RGB streams, and we have kept the original enhancement module and feature decoder module. In our approach, the focus was on the video-only version of UMMAformer, excluding the audio

Table 1: Performance comparison on task 2 of 1M Deepfake Challenge where we have obtained the best scoring.

Method	Score	AP@0.5	AP@0.75	AP@0.9	AP@0.95	AR@50	AR@30	AR@20	AR@10	AR@5
Baseline (UmmaFormer)	40.93	68.68	40.00	11.32	2.35	51.44	51.41	51.35	51.23	50.95
VIGO$_{loc}$ (ours)	**90.67**	**98.51**	**95.95**	**83.86**	**68.15**	**95.27**	**95.16**	**95.01**	**94.59**	**93.85**

Table 2: Performance comparison on Lav-DF Full Set. Bold faces correspond to the top performance.

Method	AP@0.5	AP@0.75	AP@0.95	AR@100	AR@50	AR@20	AR@10
BA-TFD [6]	79.15	38.57	00.24	67.03	64.18	60.89	58.51
TadTR [15]	80.22	61.04	05.22	72.50	72.50	70.56	69.18
ActionFormer [30]	85.23	59.05	00.93	77.23	77.23	77.19	76.93
TriDet [21]	86.33	70.23	03.05	74.47	74.47	74.46	74.45
BA-TFD+ [5]	96.30	84.96	04.44	81.62	80.48	79.40	78.75
BA-TFD+ (visual only) [5]	64.78	54.85	02.53	64.00	59.33	55.94	54.38
UmmaFormer [32]	**98.83**	**95.54**	37.61	92.48	92.47	92.42	92.10
VIGO$_{loc}$ (ours)	96.62	94.05	**65.04**	**93.34**	**93.34**	**93.34**	**93.34**

modality. This decision was based on a series of comparative evaluations which indicated that the video-only configuration produced better results when combined with the audio method described previously.

Finally, we adopted a fusion stage to provide a final decision S^{loc}. The segments can be represented as $S = \{t_{n,sf}, t_{n,ef}, s_n\}_{n=1}^{N_f}$, where N_f is the number of detected modified segments, $t_{n,sf}$, $t_{n,ef}$ and s_n are the start time, the end time, and the confidence score, respectively. Since the audio model showed slightly higher reliability compared to the video model, we used it as the primary reference. We define the detected video segments and audio segments as S^v and S^a respectively. Video segments from S^v are first removed in the fusion stage if they have an Intersection over Union (IoU) greater than 0.1 with audio segments S^a,

$$S^{v'} = \{v \in S^v | IoU(v, S_i^a) \leq 0.1 \forall i \in [0, M_f)\}$$

where M_f is the number of detected deepfake segments of S^a. The final segments are computed as

$$S^{loc} = S^a \cup S^{v'}$$

4 Experiments

In compliance with the ACM 1M DeepFake Challenge, we tested our systems for detection and localization tasks, using the metrics defined by the challenge.

For Task 1 (classification) the metric used was the AUC score. For task 2 (localization) the metrics used were Average Precision (AP) and Average Recall (AR). The global Score S is computed as

$$S = \frac{1}{8} \sum_{IoU \in \{0.5,0.75,0.9,0.95\}} AP@IoU + \frac{1}{10} \sum_{N \in \{50,30,20,10,5\}} AR@N$$

Table 3 shows the results achieved independently by the two independent networks in our architecture, as well as the merged result of both networks, which offers the best results in terms of AUC.

Table 3: Performance comparison on task 1 of 1M Deepfake Challenge

Method	Auc
Baseline (Frame level Xception)	68.68
VIGO$_{class-mm}$ (ours)	99.79777
TSN-RGB	99.93996
VIGO$_{class}$ (ours)	**99.99963**

The evaluations were also run in the test set of task 2 of the challenge, and achieved the best score (Table 1). Our system shows great precision in identifying temporal segments, with an AP@0.75 above 95%, starting to decline for stricter $IoUs$, but still providing rates of almost 70% for AP@0.95.

On the other hand, along with AV-Deepfake, LAV-DF is the most relevant database for modified time segments generated by audio and video deepfakes. We have also evaluated our method with this database and obtained good results (Table 2). Our method stands out especially in terms of recall and precision with high IoUs, where it obtains the best result compared to state-of-the-art methods.

5 Conclusions

We propose a new method based on a video-level deepfake detection system that combines audio features from Wav2Vec 2.0 with video features from Temporal Segment Networks for solving a deepfake audio video detection problem. We also have developed a new temporal deepfake localization system, based on the aforementioned audio and video features. Both methods present good performance, attaining close to AUC 1 in the detection task and the best score for the temporal localization task of the ACM 1M deepfake detection challenge (AV-Deepfake database). The localization method also shows good performance on the state-of-the-art LAV-DF database.

Acknowledgments

This work is supported by the European Union Feder Galicia operational program 2021-2027.

References

[1] Alexei Baevski, Henry Zhou, Abdelrahman Mohamed, and Michael Auli. 2020. wav2vec 2.0: A Framework for Self-Supervised Learning of Speech Representations. arXiv:2006.11477

[2] Kratika Bhagtani, Amit Kumar Singh Yadav, Emily R Bartusiak, Ziyue Xiang, Ruiting Shao, Sriram Baireddy, and Edward J Delp. 2022. An overview of recent work in media forensics: Methods and threats. *arXiv preprint arXiv:2204.12067* (2022).

[3] Zhixi Cai, Abhinav Dhall, Shreya Ghosh, Munawar Hayat, Dimitrios Kollias, Kalin Stefanov, and Usman Tariq. 2024. 1M-Deepfakes Detection Challenge. In *ACM international conference on multimedia*.

[4] Zhixi Cai, Shreya Ghosh, Aman Pankaj Adatia, Munawar Hayat, Abhinav Dhall, and Kalin Stefanov. 2023. AV-Deepfake1M: A Large-Scale LLM-Driven Audio-Visual Deepfake Dataset. arXiv:2311.15308

[5] Zhixi Cai, Shreya Ghosh, Abhinav Dhall, Tom Gedeon, Kalin Stefanov, and Munawar Hayat. 2023. Glitch in the Matrix: A Large Scale Benchmark for Content Driven Audio-Visual Forgery Detection and Localization. arXiv:2305.01979

[6] Zhixi Cai, Kalin Stefanov, Abhinav Dhall, and Munawar Hayat. 2023. Do You Really Mean That? Content Driven Audio-Visual Deepfake Dataset and Multimodal Method for Temporal Forgery Localization. arXiv:2204.06228

[7] Sanyuan Chen, Chengyi Wang, Zhengyang Chen, Yu Wu, Shujie Liu, Zhuo Chen, Jinyu Li, Naoyuki Kanda, Takuya Yoshioka, Xiong Xiao, Jian Wu, Long Zhou, Shuo Ren, Yanmin Qian, Yao Qian, Jian Wu, Michael Zeng, Xiangzhan Yu, and Furu Wei. 2022. WavLM: Large-Scale Self-Supervised Pre-Training for Full Stack Speech Processing. *IEEE Journal of Selected Topics in Signal Processing* 16, 6 (Oct. 2022), 1505–1518. https://doi.org/10.1109/jstsp.2022.3188113

[8] Wenqing Chu, Ying Tai, Chengjie Wang, Jilin Li, Feiyue Huang, and Rongrong Ji. 2020. SSCGAN: Facial Attribute Editing via Style Skip Connections. In *Computer Vision – ECCV 2020*, Andrea Vedaldi, Horst Bischof, Thomas Brox, and Jan-Michael Frahm (Eds.). Springer International Publishing, Cham, 414–429.

[9] Andrea Ciamarra, Roberto Caldelli, Federico Becattini, Lorenzo Seidenari, and Alberto Del Bimbo. 2024. Deepfake Detection by Exploiting Surface Anomalies: The Surfake Approach. In *IEEE/CVF Winter Conference on Applications of Computer Vision Workshops, WACVW 2024 - Workshops, Waikoloa, HI, USA, January 1-6, 2024*. IEEE, 1024–1033. https://doi.org/10.1109/WACVW60836.2024.00112

[10] Brian Dolhansky, Joanna Bitton, Ben Pflaum, Jikuo Lu, Russ Howes, Menglin Wang, and Cristian Canton Ferrer. 2020. The DeepFake Detection Challenge (DFDC) Dataset. arXiv:2006.07397

[11] Tackhyun Jung, Sangwon Kim, and Keecheon Kim. 2020. DeepVision: Deepfakes Detection Using Human Eye Blinking Pattern. *IEEE Access* 8 (2020), 83144–83154. https://doi.org/10.1109/ACCESS.2020.2988660

[12] Tero Karras, Samuli Laine, Miika Aittala, Janne Hellsten, Jaakko Lehtinen, and Timo Aila. 2020. Analyzing and Improving the Image Quality of StyleGAN. arXiv:1912.04958

[13] Yuezun Li, Xin Yang, Pu Sun, Honggang Qi, and Siwei Lyu. 2020. Celeb-DF: A Large-Scale Challenging Dataset for DeepFake Forensics. In *2020 IEEE/CVF Conference on Computer Vision and Pattern Recognition (CVPR)*. 3204–3213. https://doi.org/10.1109/CVPR42600.2020.00327

[14] Hanxiao Liu, Zihang Dai, David So, and Quoc V Le. 2021. Pay Attention to MLPs. In *Advances in Neural Information Processing Systems*, M. Ranzato, A. Beygelzimer, Y. Dauphin, P.S. Liang, and J. Wortman Vaughan (Eds.), Vol. 34. Curran Associates, Inc., 9204–9215. https://proceedings.neurips.cc/paper_files/paper/2021/file/4cc05b35c2f937c5bd9e7d41d3686fff-Paper.pdf

[15] Xiaolong Liu, Qimeng Wang, Yao Hu, Xu Tang, Shiwei Zhang, Song Bai, and Xiang Bai. 2022. End-to-End Temporal Action Detection With Transformer. *IEEE Transactions on Image Processing* 31 (2022), 5427–5441. https://doi.org/10.1109/tip.2022.3195321

[16] Kevin Lutz and Robert Bassett. 2021. DeepFake Detection with Inconsistent Head Poses: Reproducibility and Analysis. *CoRR* abs/2108.12715 (2021). arXiv:2108.12715 https://arxiv.org/abs/2108.12715

[17] Daisuke Niizumi, Daiki Takeuchi, Yasunori Ohishi, Noboru Harada, and Kunio Kashino. 2021. BYOL for Audio: Self-Supervised Learning for General-Purpose Audio Representation. arXiv:2103.06695

[18] Kiran Raja, Matteo Ferrara, Annalisa Franco, Luuk Spreeuwers, Ilias Batskos, Florens de Wit, Marta Gomez-Barrero, Ulrich Scherhag, Daniel Fischer, Sushma Krupa Venkatesh, Jag Mohan Singh, Guoqiang Li, Loic Bergeron, Sergey Isadskiy, Raghavendra Ramachandra, Christian Rathgeb, Dinusha Frings, Uwe Seidel, Fons Knopjes, Raymond Veldhuis, Davide Maltoni, and Christoph Busch. 2021. Morphing Attack Detection-Database, Evaluation Platform, and Benchmarking. *IEEE Transactions on Information Forensics and Security* 16 (2021), 4336–4351. https://doi.org/10.1109/tifs.2020.3035252

[19] Andreas Rössler, Davide Cozzolino, Luisa Verdoliva, Christian Riess, Justus Thies, and Matthias Niessner. 2019. FaceForensics++: Learning to Detect Manipulated Facial Images. In *2019 IEEE/CVF International Conference on Computer Vision (ICCV)*. 1–11. https://doi.org/10.1109/ICCV.2019.00009

[20] Steffen Schneider, Alexei Baevski, Ronan Collobert, and Michael Auli. 2019. wav2vec: Unsupervised Pre-Training for Speech Recognition. In *Proc. Interspeech 2019*. 3465–3469. https://doi.org/10.21437/Interspeech.2019-1873

[21] Dingfeng Shi, Yujie Zhong, Qiong Cao, Lin Ma, Jia Li, and Dacheng Tao. 2023. TriDet: Temporal Action Detection with Relative Boundary Modeling. arXiv:2303.07347

[22] Justus Thies, Mohamed Elgharib, Ayush Tewari, Christian Theobalt, and Matthias Nießner. 2020. Neural Voice Puppetry: Audio-Driven Facial Reenactment. In *Computer Vision - ECCV 2020 - 16th European Conference, Glasgow, UK, August 23-28, 2020, Proceedings, Part XVI (Lecture Notes in Computer Science, Vol. 12361)*, Andrea Vedaldi, Horst Bischof, Thomas Brox, and Jan-Michael Frahm (Eds.). Springer, 716–731. https://doi.org/10.1007/978-3-030-58517-4_42

[23] Ruben Tolosana, Sergio Romero-Tapiador, Ruben Vera-Rodriguez, Ester Gonzalez-Sosa, and Julian Fierrez. 2022. DeepFakes detection across generations: Analysis of facial regions, fusion, and performance evaluation. *Engineering Applications of Artificial Intelligence* 110 (2022), 104673. https://doi.org/10.1016/j.engappai.2022.104673

[24] Ruben Tolosana, Ruben Vera-Rodriguez, Julian Fierrez, Aythami Morales, and Javier Ortega-Garcia. 2020. Deepfakes and beyond: A Survey of face manipulation and fake detection. *Information Fusion* 64 (2020), 131–148. https://doi.org/10.1016/j.inffus.2020.06.014

[25] Loc Trinh, Michael Tsang, Sirisha Rambhatla, and Yan Liu. 2021. Interpretable and Trustworthy Deepfake Detection via Dynamic Prototypes. arXiv:2006.15473

[26] B. Wang, Y. Zhao, L. Yang, T. Long, and X. Li. 2024. Temporal Action Localization in the Deep Learning Era: A Survey. *IEEE Transactions on Pattern Analysis; Machine Intelligence* 46, 04 (apr 2024), 2171–2190. https://doi.org/10.1109/TPAMI.2023.3330794

[27] Limin Wang, Yuanjun Xiong, Zhe Wang, Yu Qiao, Dahua Lin, Xiaoou Tang, and Luc Van Gool. 2017. Temporal Segment Networks for Action Recognition in Videos. arXiv:1705.02953

[28] Yi Wang, Kunchang Li, Xinhao Li, Jiashuo Yu, Yinan He, Guo Chen, Baoqi Pei, Rongkun Zheng, Jilan Xu, Zun Wang, Yansong Shi, Tianxiang Jiang, Songze Li, Hongjie Zhang, Yifei Huang, Yu Qiao, Yali Wang, and Limin Wang. 2024. InternVideo2: Scaling Video Foundation Models for Multimodal Video Understanding. arXiv:2403.15377

[29] Jiangyan Yi, Chenglong Wang, Jianhua Tao, Xiaohui Zhang, Chu Yuan Zhang, and Yan Zhao. 2023. Audio Deepfake Detection: A Survey. arXiv:2308.14970

[30] Chenlin Zhang, Jianxin Wu, and Yin Li. 2022. ActionFormer: Localizing Moments of Actions with Transformers. arXiv:2202.07925

[31] Lin Zhang, Xin Wang, Erica Cooper, Nicholas Evans, and Junichi Yamagishi. 2023. The PartialSpoof Database and Countermeasures for the Detection of Short Fake Speech Segments Embedded in an Utterance. *IEEE/ACM Transactions on Audio, Speech, and Language Processing* 31 (2023), 813–825. https://doi.org/10.1109/taslp.2022.3233236

[32] Rui Zhang, Hongxia Wang, Mingshan Du, Hanqing Liu, Yang Zhou, and Qiang Zeng. 2023. UMMAFormer: A Universal Multimodal-adaptive Transformer Framework for Temporal Forgery Localization. In *Proceedings of the 31st ACM International Conference on Multimedia (MM '23)*. ACM. https://doi.org/10.1145/3581783.3613767