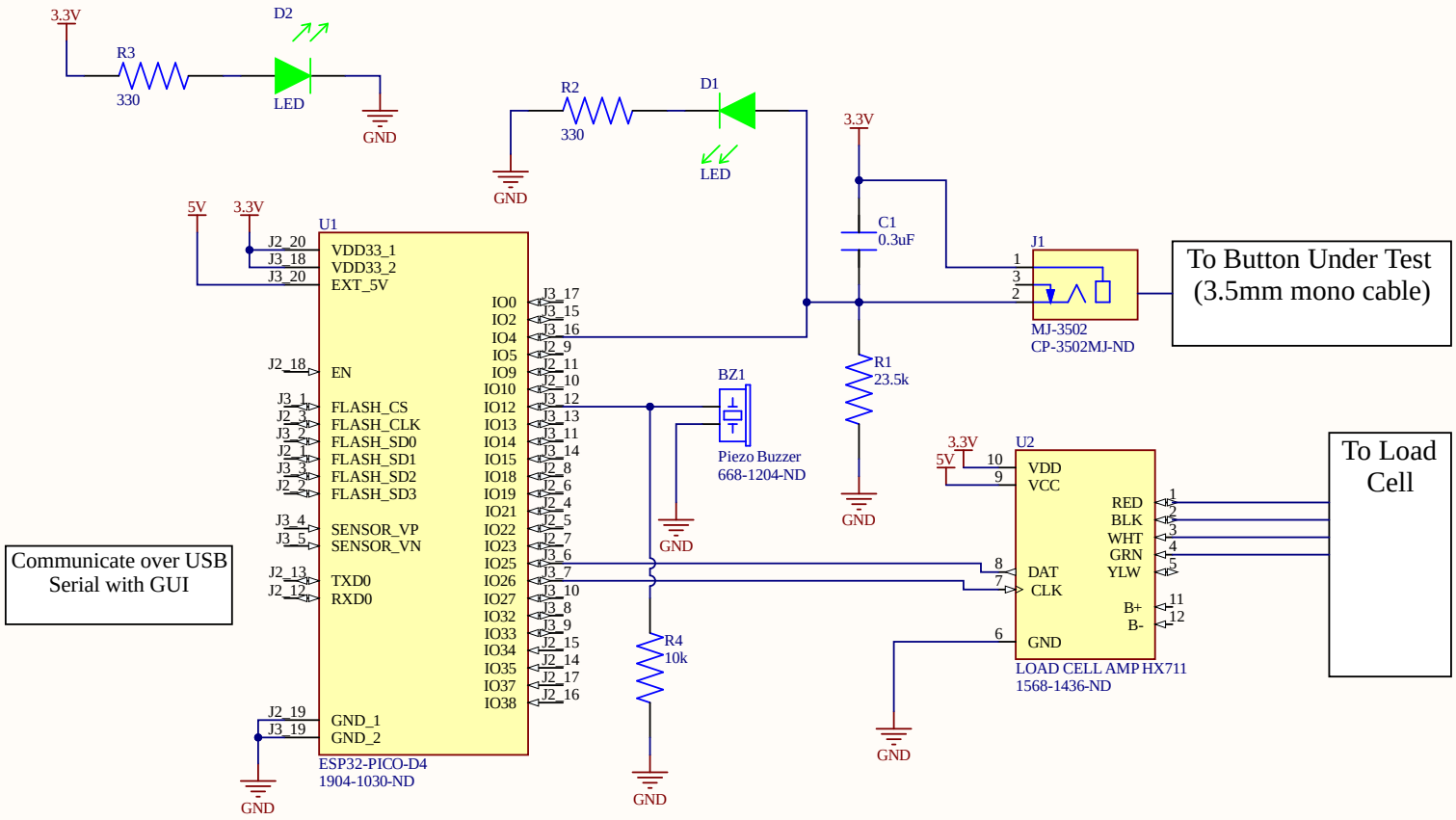

Title		
Size A4	Number	Revision
Date: 11/29/2022		Sheet of
File: C:\Users\..\pcb.SchDoc		Drawn By: