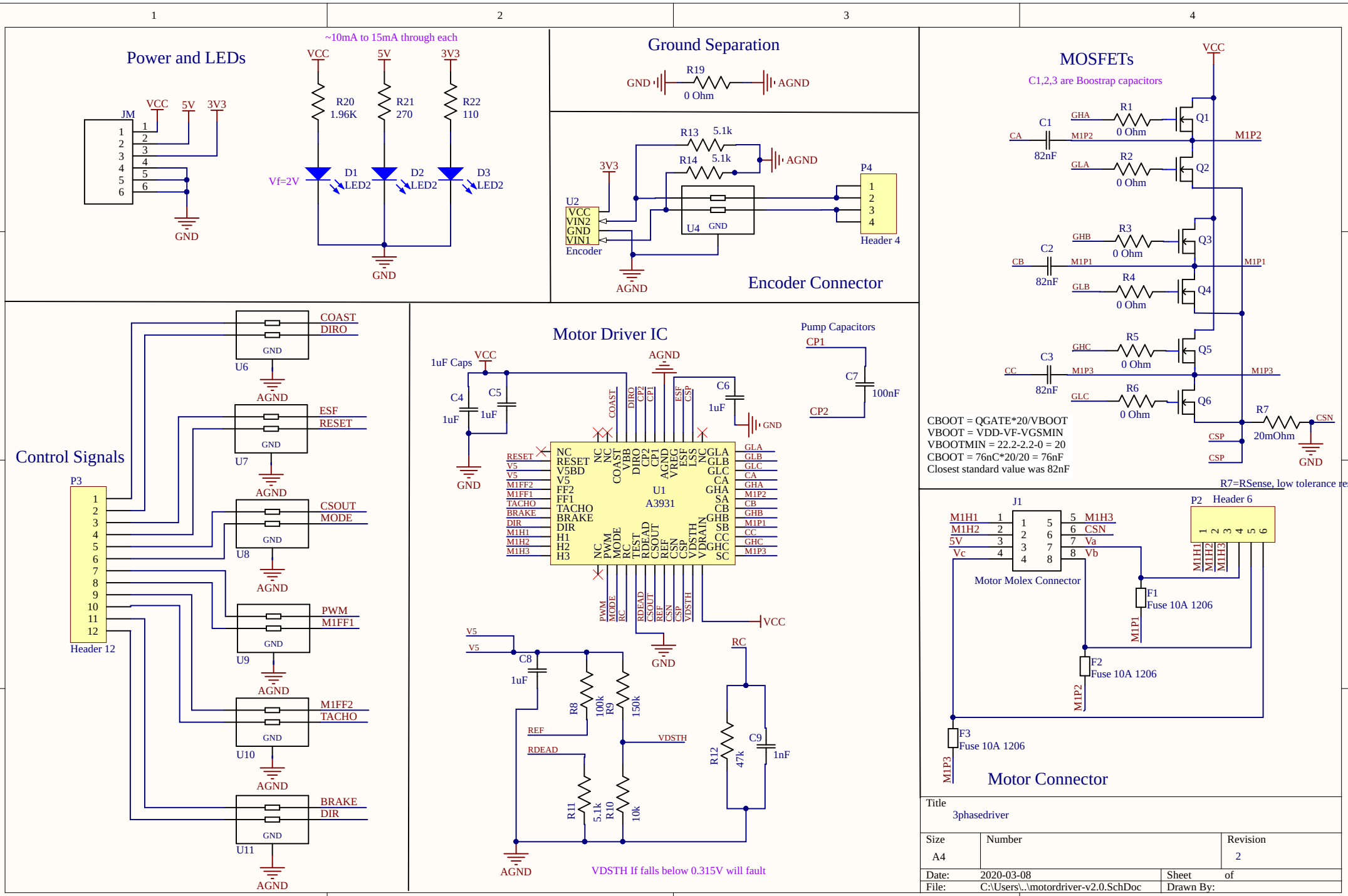
Power and LEDs
~10mA to 15mA through each
JM
VCC
5V
3V3
GND
R20
1.96K
R21
270
R22
110
Vf=2V
D1
LED2
D2
LED2
D3
LED2
Ground Separation
R19
0 Ohm
AGND
R13
5.1k
R14
5.1k
U2
VCC
VIN2
GND
VIN1
Encoder
U4
P4
Header 4
Encoder Connector
MOSFETs
C1,2,3 are Boostrap capacitors
C1
82nF
C2
82nF
C3
82nF
R1
0 Ohm
R2
0 Ohm
R3
0 Ohm
R4
0 Ohm
R5
0 Ohm
R6
0 Ohm
R7
20mOhm
Q1
Q2
Q3
Q4
Q5
Q6
GHA
GLA
GHB
GLB
GHC
GLC
M1P1
M1P2
M1P3
CSN
CSP
CBOOT = QGATE*20/VBOOT
VBOOT = VDD-VF-VGSMIN
VBOOTMIN = 22.2-2.2-0 = 20
CBOOT = 76nC*20/20 = 76nF
Closest standard value was 82nF
R7=RSense, low tolerance res
Control Signals
P3
Header 12
U6
U7
U8
U9
U10
U11
COAST
DIRO
ESF
RESET
CSOUT
MODE
PWM
M1FF1
M1FF2
TACHO
BRAKE
DIR
Motor Driver IC
1uF Caps
C4
1uF
C5
1uF
C6
1uF
U1
A3931
Pump Capacitors
CP1
CP2
C7
100nF
C8
1uF
R8
100k
R9
150k
R11
5.1k
R10
10k
R12
47k
C9
1nF
REF
RDEAD
VDSTH
RC
VDSTH If falls below 0.315V will fault
J1
Motor Molex Connector
P2
Header 6
F1
Fuse 10A 1206
F2
Fuse 10A 1206
F3
Fuse 10A 1206
Motor Connector
Title
3phasedriver
Size
A4
Number
Revision
2
Date:
2020-03-08
Sheet
of
File:
C:\Users\..\motordriver-v2.0.SchDoc
Drawn By:

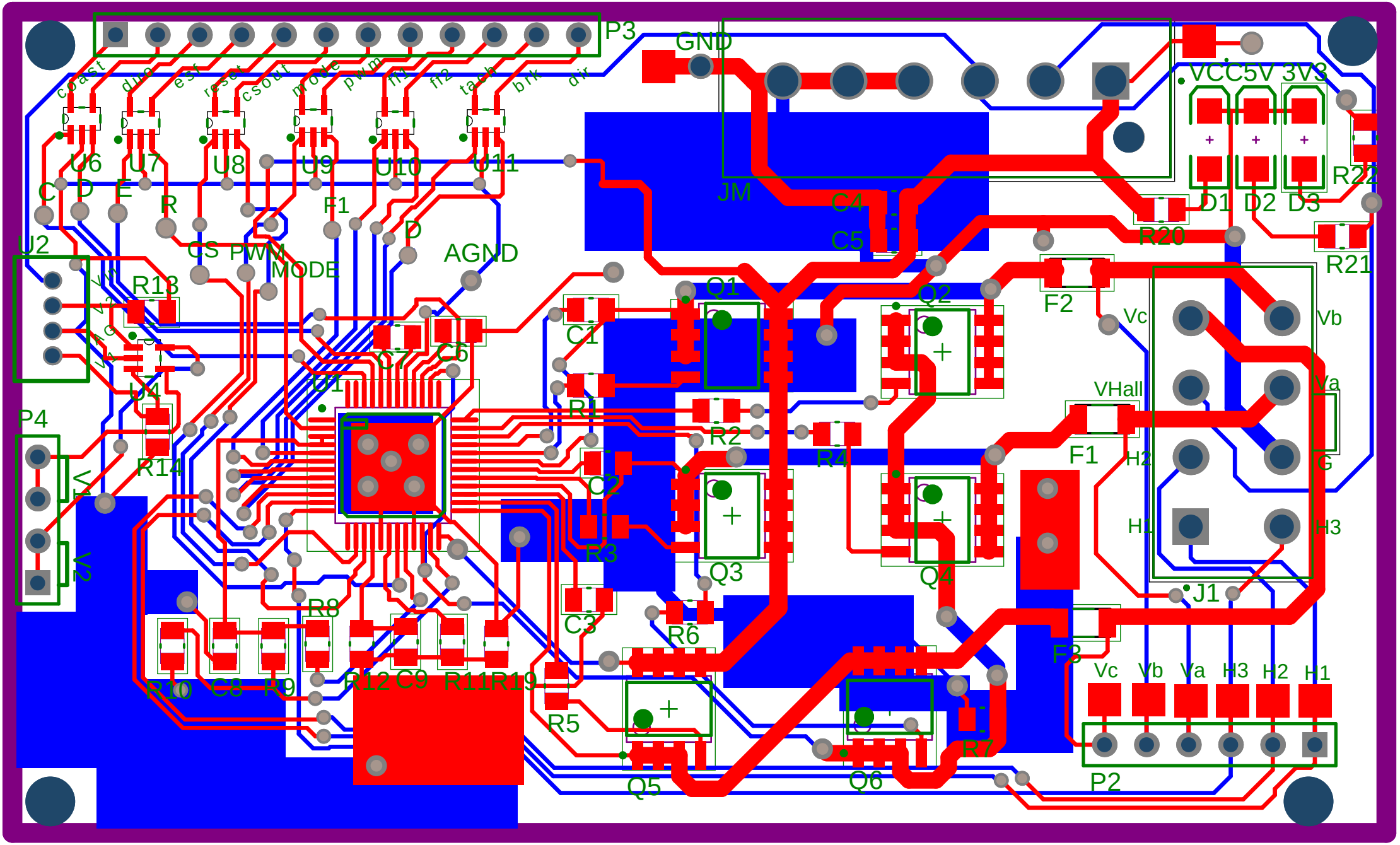
P3
GND
VCC5V 3V3
coast
dir
esf
reset
csout
mode
pwm
ff1
ff2
tach
brk
dir
U6
U7
U8
U9
U10
U11
C
D
E
R
F1
D
AGND
CS
PWM
MODE
U2
R13
U4
R14
P4
V1
V2
JM
C4
C5
D1
D2
D3
R22
R20
R21
F2
Q1
Q2
C1
C7
C6
U1
R1
R2
R4
C2
R3
Q3
Q4
C3
R6
R8
R10
C8
R9
R12
C9
R11
R19
R5
Q5
Q6
R7
F3
Vc
Vb
Va
VHall
H2
H1
H3
G
J1
P2

Board S