ABC Amber CHM Converter Trial version, http://www.processtext.com/abcchm.html

Next

C & Data Structures

P. S. Deshpande
O. G. Kakde

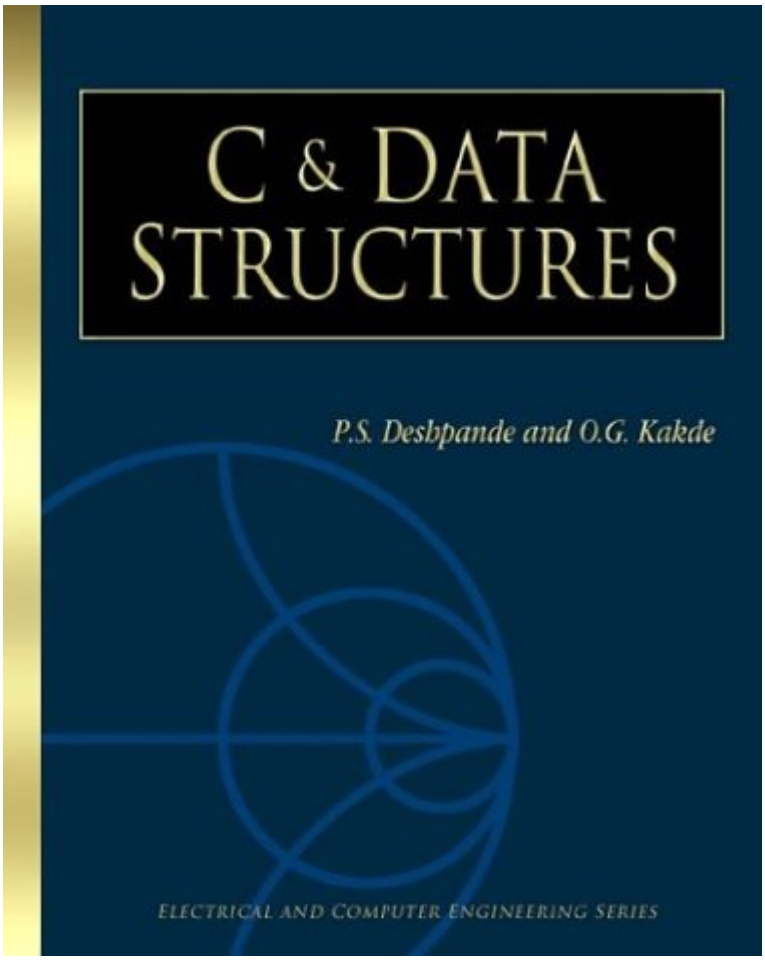

CHARLES RIVER MEDIA, INC.
Hingham, Massachusetts

Copyright © 2003 Dreamtech Press

Reprint Copyright © 2004 by CHARLES RIVER MEDIA, INC.
All rights reserved.

No part of this publication may be reproduced in any way, stored in a retrieval system of any type, or transmitted by any means or media, electronic or mechanical, including, but not limited to, photocopy, recording, or scanning, without *prior permission in writing* from the publisher.

Acquisitions Editor: James Walsh
Production: Dreamtech Press
Cover Design: Sherry Stinson

CHARLES RIVER MEDIA, INC.
10 Downer Avenue
Hingham, Massachusetts 02043
781-740-0400
781-740-8816 (FAX)
info@charlesriver.com
http://www.charlesriver.com

ABC Amber CHM Converter Trial version, http://www.processtext.com/abcchm.html

P.S. Deshpande and O.G. Kakde. *C & Data Structures*
1-58450-338-6

All brand names and product names mentioned in this book are trademarks or service marks of their respective companies. Any omission or misuse (of any kind) of service marks or trademarks should not be regarded as intent to infringe on the property of others. The publisher recognizes and respects all marks used by companies, manufacturers, and developers as a means to distinguish their products.

Library of Congress Cataloging-in-Publication Data

Deshpande, P. S.
C & data structures / P.S. Deshpande, O.G. Kakde.
p. cm.
ISBN 1-58450-338-6 (Paperback with CD-ROM : alk. paper)
1. C (Computer program language) 2. Data structures (Computer science) I. Kakde, O. G. II. Title.
QA76.73.C15D48 2003
005.7'3—dc22

2003021572

04 7 6 5 4 3 2 First Edition

CHARLES RIVER MEDIA titles are available for site license or bulk purchase by institutions, user groups, corporations, etc. For additional information, please contact the Special Sales Department at 781-740-0400.

Requests for replacement of a defective CD-ROM must be accompanied by the original disc, your mailing address, telephone number, date of purchase and purchase price. Please state the nature of the problem, and send the information to CHARLES RIVER MEDIA, INC., 10 Downer Avenue, Hingham, Massachusetts 02043. CRM's sole obligation to the purchaser is to replace the disc, based on defective materials or faulty workmanship, but not on the operation or functionality of the product.

Acknowledgments

Writing any book is not an easy task. We spent about one year designing the contents, implementing the programs and testing the programs. Our 12 years of teaching experience has helped us to explain the issues in the language and complex problems in data structures.

We are thankful to our student Rupesh Nasre who, after receiving an M.Tech. degree in computer science from IIT Mumbai, helped us in implementing advanced problems in data structures. We are also thankful to our students Ms. Usha Agrawal and Mr. Ramchandra Vibhute for helping us in writing programs for II.

Next

ABC Amber CHM Converter Trial version, http://www.processtext.com/abcchm.html

C & Data Structures

byP.S. DeshpandeandO.G. Kakde

ISBN:1584503386
Charles River Media 2004 (700 pages)

This thorough text provides a comprehensive guide to all the data types in C with internal implementation, while providing examples to demonstrate their behavior.

Table of Contents

C & Data Structures
Preface
Part I - C Language
Chapter 1 - Introduction to the C Language
Chapter 2 - Data Types
Chapter 3 - C Operators
Chapter 4 - Control Structures
Chapter 5 - The `printf` Function
Chapter 6 - Address and Pointers
Chapter 7 - The `scanf` Function
Chapter 8 - Preprocessing
Chapter 9 - Arrays
Chapter 10 - Function
Chapter 11 - Storage of Variables
Chapter 12 - Memory Allocation
Chapter 13 - Recursion
Chapter 14 - Strings
Chapter 15 - Structures
Chapter 16 - Union
Chapter 17 - Files
Part II - Data Structures
Chapte - Arrays, Searching, and Sorting

ABC Amber CHM Converter Trial version, http://www.processtext.com/abcchm.html

r 18
Chapter 19 - Stacks and Queues
Chapter 20 - Linked Lists
Chapter 21 - Trees
Chapter 22 - Graphs
Part III - Advanced Problems in Data Structures
Chapter 23 - Problems in Arrays, Searching, Sorting, Hashing
Chapter 24 - Problems in Stacks and Queues
Chapter 25 - Problems in Linked Lists
Chapter 26 - Problems in Strings
Chapter 27 - Problems in Trees
Chapter 28 - Problems in Graphs
Chapter 29 - Miscellaneous Problems
Index
List of Figures
List of Tables
Back Cover
CD Content

ABC Amber CHM Converter Trial version, http://www.processtext.com/abcchm.html

Preface

The book is written for both undergraduate and graduate students of core computer science areas. The book would be very useful for other students to learn programming for the purpose of making a career in computer science. It covers all those topics that generally appear in aptitude tests and interviews. It not only gives the language syntax but also discusses its behavior by showing the internal implementation. We have covered almost the entire range of data structures and programming such as non-recursive implementation of tree traversals, A* algorithm in Artificial Intelligence, 8-queens problems, etc. We also have supplied a CD-ROM which contains all the source material that appears in the book. We welcome comments from our readers.

ABC Amber CHM Converter Trial version, http://www.processtext.com/abcchm.html

Part I: C Language

Chapter 1: Introduction to the C Language

Chapter 2: Data Types

Chapter 3: C Operators

Chapter 4: Control Structures

Chapter 5: The `printf` Function

Chapter 6: Address and Pointers

Chapter 7: The `scanf` Function

Chapter 8: Preprocessing

Chapter 9: Arrays

Chapter 10: Functions

Chapter 11: Storage of Variables

Chapter 12: Memory Allocation

Chapter 13: Recursion

Chapter 14: Strings

Chapter 15: Structures

Chapter 16: Union

Chapter 17: Files

ABC Amber CHM Converter Trial version, http://www.processtext.com/abcchm.html

Chapter 1: Introduction to the C Language

THE FIRST PROGRAM IN C

Introduction

The C program is a set of functions. The program execution begins by executing the function `main ()`. You can compile the program and execute using Turbo C compiler or using the following commands in Unix/Linux:

```
$ cc   -o a a.c
```

where a.c is the file in which you have written the program. This will create an executable file named a.exe.

```
$./a.
```

This will execute the program.

Program

```
#include <stdio.h>
main()
{
printf("Hello \n"); /* prints Hello on standard output */ }

Output : Hello
```

Explanation

1. The program execution begins with the function `main()`.
2. The executable statements are enclosed within a block that is marked by '{' and '}'.
3. The `printf()` function redirects the output to a standard output, which in most cases is the output on screen.
4. Each executable statement is terminated by ';'
5. The comments are enclosed in '`/*...*/`'

Variables

Introduction

When you want to process some information, you can save the values temporarily in variables. In the following program you can define two variables, save the values, and put the addition in the third variable.

Program

```
#include <stdio.h>
main()
{
int i,j,k; // Defining variables Statement A
i = 6;     // Statement B
j = 8;
k = i + j;
```

```
printf("sum of two numbers is %d \n",k); // Printing results
}
output : sum of two numbers is 14
```

Explanation

1. Statement A defines variables of the type *integer*. For each variable you have to attach some data type. The *data type* defines the amount of storage allocated to variables, the values that they can accept, and the operations that can be performed on variables.
2. The ‘ `//` ’ is used as single line comment.
3. The ‘`%d`’ is used as format specifier for the integer. Each data type has a format specifier that defines how the data of that data type will be printed.
4. The assignment operator is ‘=’ and the statement is in the format:

Var = expression;

Points to Remember

1. The variables are defined at the begining of the block.
2. The data type is defined at the begining of declaration and followed by a list of variables.
3. It is the data type that assigns a property to a variable.

Previous Next

ABC Amber CHM Converter Trial version, http://www.processtext.com/abcchm.html

INPUTTING THE DATA

Introduction

In C, the input from a standard input device, such as a keyboard, is taken by using the function `scanf`. In `scanf`, you have to specify both the variables in which you can take input, and the format specifier, such as `%d` for the integer.

Program

```
#include <stdio.h>
main()
{
int i,j,k;
scanf("%d%d",&i,&j);  // statement A
k = i + j;
printf("sum of two numbers is %d \n",k);
}
Input 3 4
Output:  sum of two numbers is 7
```

Explanation

1. Statement A indicates the `scanf` statement that is used for taking input. In `scanf` you have to specify a list of addresses of variables (`&i`, `&j`) which can take input. Before specifying the list of variables you have to include a list of format specifiers that indicate the format of the input. For example, for the integer data type the format specifier is `%d`.
2. In `scanf`, you have to specify the address of the variable, such as `&i`. The address is the memory location where a variable is stored. The reason you must specify the address will be discussed later.
3. The number of format specifiers must be the same as the number of variables.

Point to Remember

In `scanf`, you have to specify the address of a variable, such as `&i`, `&j`, and a list of format specifiers.

ABC Amber CHM Converter Trial version, http://www.processtext.com/abcchm.html

THE CONTROL STATEMENT (`if` STATEMENT)

Introduction

You can conditionally execute statements using the `if` or the `if...else` statement. The control of the program is dependent on the outcome of the Boolean condition that is specified in the `if` statement.

Program

```
#include <stdio.h>
main()
{
int i,j,big;  //variable declaration
scanf("%d%d",&i,&j); big = i;
if(big < j)  // statement A
{       // C
big = j;        // Part Z, then part
}       // D
printf("biggest of two numbers is %d \n",big);
if(i < j)  // statement B
    {
    big = j;  // Part X
    }
  else
    {
    big = i;  // Part Y
    }
printf("biggest of two numbers(using else) is %d \n",big);
}
```

Explanation

1. Statement A indicates the `if` statement. The general form of the `if` statement is `if(expr)`
2.
3. `{`
4. `s1 ;`
5. `s2 ;`
6. `....`
7. `}`
8. `expr` is a Boolean expression that returns true (nonzero) or false (zero).
9. In C, the value nonzero is true while zero is taken as false.
10. If you want to execute only one statement, opening and closing braces are not required, which is indicated by C and D in the current program.
11. The `else` part is optional. If the `if` condition is true then the part that is enclosed after the `if` is executed (Part X). If the `if` condition is false then the `else` part is executed (Part Y).
12. Without the `else` statement (in the first `if` statement), if the condition is true then Part Z is executed.

Points to Remember

1. `if` and `if...else` are used for conditional execution. After the `if` statement the control is

moved to the next statement.

2. If the `if` condition is satisfied, then the "then" part is executed; otherwise the `else` part is executed.
3. You can include any operators such as <, >, <=, >=, = = (for equality). Note that when you want to test two expressions for equality, use = = instead of =.

Previous Next

ABC Amber CHM Converter Trial version, http://www.processtext.com/abcchm.html

THE ITERATION LOOP (`for` LOOP)

Introduction

When you want to execute certain statements repeatedly you can use iteration statements. C has provided three types of iteration statements: the `for` loop, `while` loop, and `do...while` loop. Generally, the statements in the loop are executed until the specified condition is true or false.

Program

```
#include <stdio.h>
main()
{
int i,n;  //the
scanf("%d",&n);
for(i = 0; i<n; i= i+1)  // statement A
{
printf("the numbers are %d \n",i); // statement B
}
}
/* input and output
5
the numbers are 0
the numbers are 1
the numbers are 2
the numbers are 3
the numbers are 4
*/
```

Explanation

1. Statement A indicates the `for` loop. The statements in the enclosing braces, such as statement B, indicate the statements that are executed repeatedly because of the `for` loop.
2. The format of the `for` loop is
3.
4. `for (expr1;expr2;expr3)`
5. `{`
6. `s1;`
7. `s2 ;  // repeat section`
8. `}`
9. `expr2` is a Boolean expression. If it is not given, it is assumed to be true.
10. The expressions `expr1`, `expr2` and `expr3` are optional.
11. `expr1` is executed only once, the first time the `for` loop is invoked.
12. `expr2` is executed each time before the execution of the repeat section.
13. When `expr2` is evaluated false, the loop is terminated and the repeat section is not executed.
14. After execution of the repeat section, `expr3` is executed. Generally, this is the expression that is used to ensure that the loop will be terminated after certain iterations.

Points to Remember

1. The `for` loop is used for repeating the execution of certain statements.

2. The statements that you want to repeat should be written in the repeat section.
3. Generally, you have to specify any three expressions in the `for` loop.
4. While writing expressions, ensure that `expr2` is evaluated to be false after certain iterations; otherwise your loop will never be terminated, resulting in infinite iterations.

Previous Next

ABC Amber CHM Converter Trial version, http://www.processtext.com/abcchm.html

THE do...while LOOP

Introduction

The do...while loop is similar to the while loop, but it checks the conditional expression only after the repetition part is executed. When the expression is evaluated to be false, the repetition part is not executed. Thus it is guaranteed that the repetition part is executed at least once.

```
Program
#include <stdio.h>
main()
{
int i,n;  //the
scanf("%d",&n);
i = 0;
do                    // statement A
{
printf("the numbers are %d \n",i);
i = i +1;
}while( i<n) ;

}
/*
5
the numbers are 0
the numbers are 1
the numbers are 2
the numbers are 3
the numbers are 4
*/
```

Explanation

1. Statement A indicates the do...while loop.
2. The general form of the do...while loop is
3.
4. do
5. {
6. repetition part;
7. } while (expr);

   When the do...while loop is executed, first the repetition part is executed, and then the conditional expression is evaluated. If the conditional expression is evaluated as true, the repetition part is executed again. Thus the condition is evaluated after each iteration. In the case of a normal while loop, the condition is evaluated before making the iteration.
8. The loop is terminated when the condition is evaluated to be false.

Point to Remember

The do...while loop is used when you want to make at least one iteration. The condition should be

checked after each iteration.

Previous Next

ABC Amber CHM Converter Trial version, http://www.processtext.com/abcchm.html

THE switch STATEMENT

Introduction

When you want to take one of a number of possible actions and the outcome depends on the value of the expression, you can use the `switch` statement. `switch` is preferred over multiple `if...else` statements because it makes the program more easily read.

Program

```
#include <stdio.h>
main()
{
int i,n;  //the
scanf("%d",&n); for(i = 1; i<n; i= i+1)
{
switch(i%2) // statement A
{
case 0 : printf("the number %d is even \n",i); // statement B
               break;   // statement C
case 1 : printf("the number %d is odd \n",i);
               break;
}
}
}
/*
5
the number 1 is odd
the number 2 is even
the number 3 is odd
the number 4 is even
*/
```

Explanation

The program demonstrates the use of the `switch` statement.

1. The general form of a `switch` statement is
2.
3. `Switch(switch_expr)`
4. `{`
5. `case constant expr1 :  S1;`
6. `S2;`
7. `break;`
8. `case constant expr1 :  S3;`
9. `S4;`
10. `break;`
11. `.....`
12. `default  :  S5;`
13. `S6;`

```
14.                                 break;
15. }
```

16. When control transfers to the `switch` statement then `switch_expr` is evaluated and the value of the expression is compared with `constant_expr1` using the equality operator.
17. If the value is equal, the corresponding statements (`S1` and `S2`) are executed. If `break` is not written, then `S3` and `S4` are executed. If `break` is used, only `S1` and `S2` are executed and control moves out of the `switch` statement.
18. If the value of `switch_expr` does not match that of `constant_expr1`, then it is compared with the next `constant_expr`. If no values match, the statements in default are executed.
19. In the program, statement A is the `switch` expression. The expression `i%2` calculates the remainder of the division. For 2, 4, 6 etc., the remainder is 0 while for 1, 3, 5 the remainder is 1. Thus `i%2` produces either 0 or 1.
20. When the expression evaluates to 0, it matches that of `constant_expr1`, that is, 0 as specified by statement B, and the corresponding `printf` statement for an even number is printed. `break` moves control out of the `switch` statement.
21. The clause '`default`' is optional.

Point to Remember

The `switch` statement is more easily read than multiple `if...else` statements and it is used when you want to selectively execute one action among multiple actions.

Previous Next

ABC Amber CHM Converter Trial version, http://www.processtext.com/abcchm.html

Chapter 2: Data Types

THE BUILT-IN DATA TYPES IN C

Introduction

Data types are provided to store various types of data that is processed in real life. A student's record might contain the following data types: name, roll number, and grade percentage. For example, a student named Anil might be assigned roll number 5 and have a grade percentage of 78.67. The roll number is an integer without a decimal point, the name consists of all alpha characters, and the grade percentage is numerical with a decimal point. C supports representation of this data and gives instructions or statements for processing such data. In general, data is stored in the program in variables, and the kind of data the variable can have is specified by the data type. Using this example, grade percentage has a *float* data type, and roll number has an *integer* data type. The data type is attached to the variable at the time of declaration, and it remains attached to the variable for the lifetime of the program. Data type indicates what information is stored in the variable, the amount of memory that can be allocated for storing the data in the variable, and the available operations that can be performed on the variable. For example, the operation `S1 * S2`, where `S1` and `S2` are character strings, is not valid for character strings because character strings cannot be multipled.

Program

```
// the program gives maximum and minimum values of data type
#include <stdio.h>
main()
{
int i,j ;// A
i = 1;
while (i > 0)
{
j = i;
i++;
}
printf ("the maximum value of integer is %d\n",j);
printf ("the value of integer after overflow is %d\n",i);
}
```

Explanation

1. In this program there are two variables, `i` and `j`, of the type integer, which is declared in statement A.
2. The variables should be declared in the declaration section at the beginning of the block.
3. If you use variables without declaring them, the compiler returns an error.

Points to Remember

1. C supports various data types such as `float`, `int`, `char`, etc., for storing data.
2. The variables should be declared by specifying the data type.
3. The data type determines the number of bytes to be allocated to the variable and the valid operations that can be performed on the variable.

Previous Next

VARIOUS DATA TYPES IN C

Introduction

C supports various data types for processing information. There is a family of integer data types and floating-point data types. Characters are stored internally as integers, and they are interpreted according to the character set. The most commonly used character set is ASCII. In the ASCII character set, A is represented by the number 65.

Program/Examples

The data type families are as follows:

`Integer family`

```
    char data type
    int data type
    short int data type
    long int data type
```

These data types differ in the amount of storage space allocated to their respective variables. Additionally, each type has two variants, signed and unsigned, which will be discussed later.

`Float family (real numbers with decimal points)`

```
    Float data type
    Double data type
```

(ANSI has also specified `long double`, which occupies the same storage space as `double`)

Explanation

1. Data type determines how much storage space is allocated to variables.
2. Data type determines the permissible operations on variables.

Points to Remember

1. C has two main data type families: *integer* for representing whole numbers and characters of text data, and *float* for representing the real-life numbers.
2. Each family has sub-data types that differ in the amount of storage space allocated to them.
3. In general, the data types that are allocated more storage space can store larger values.

Previous Next

ABC Amber CHM Converter Trial version, http://www.processtext.com/abcchm.html

THE INTEGER DATA TYPE FAMILY

Introduction

Integer data types are used for storing whole numbers and characters. The integers are internally stored in binary form.

Program/Example

Here is an example that shows how integers are stored in the binary form.

Number =13

- Decimal representation = $1*10^1 + 3*10^0$
- Binary representation = 1101 = $1*2^3 + 1*2^2 + 0*2^1 + 1*1$

Each 1 or 0 is called a bit, thus the number 13 requires 4 bits.

In the same way, the number 130 is 1000 0010 in binary.

If the general data type is `char`, 8 bits are allocated. Using 8 bits, you can normally represent decimal numbers from 0 to 255 (0000 0000 to 1111 1111). This is the case when the data type is unsigned `char`. However, with signed `char`, the leftmost bit is used to represent the sign of the number. If the sign bit is 0, the number is positive, but if it is 1, the number is negative.

Binary representation of the following numbers in signed `char` is as follows:

Number = 127 Binary representation = 0111 1111 (leftmost bit is 0, indicating positive.)

Number = _128 Binary representation = 1000 0000 (leftmost bit is 1, indicating negative.)

The negative numbers are stored in a special form called "2's complement". It can be explained as follows:

Suppose you want to represent _127:

1. Convert 127 to binary form, i.e. 0111 1111.
2. Complement each bit: put a 0 wherever there is 1 and for 0 put 1. So you will get 1000 0000.
3. Add 1 to the above number
4.
5. `  1000 0000`
6. `+  1`
7. `----------`
8. `  1000 0001 (_127)`

Thus in the signed `char` you can have the range _128 to +127, i.e. (-2^8 to 2^8-1).

The binary representation also indicates the values in the case of overflow. Suppose you start with value 1 in `char` and keep adding 1. You will get the following values in binary representation:

```
0000 0001 (1)
0111 1111 (127)
1000 0000 (-128)
1000 0001 (-127)
```

In the case of unsigned `char` you will get

```
0000 0001 (1)
0111 1111 (127)
```

```
1000 0000 (128)
1000 0001 (129)
1111 1111 (255)
0000 0000 (0)
```

This concept is useful in finding out the behavior of the integer family data types.

The bytes allocated to the integer family data types are (1 byte = 8 bits) shown in Table 2.1.

Table 2.1: Integer data type storage allocations

Data Type	Allocation	Range
signed `char`	1 byte	-2^7 to 2^7-1 (–128 to 127)
Unsigned `char`	1 byte	0 to 2^8-1 (0 to 255)
`short`	2 bytes	-2^{15} to $2^{15}-1$ (–32768 to 32767)
Unsigned `short`	2 bytes	0 to $2^{16}-1$ (0 to 65535)
`long int`	4 bytes	2^{31} to $2^{31}-1$ (2,147,483,648 to 2,147,483,647)
`int`	2 or 4 bytes depending on implementation	Range for 2 or 4 bytes as given above

Explanation

1. In C, the range of the number depends on the number of bytes allocated and whether the number is signed.
2. If the data type is unsigned the lower value is 0 and the upper depends on the number of bytes allocated.
3. If the data type is signed then the leftmost bit is used as a sign bit.
4. The negative number is stored in 2's complement form.
5. The overflow behavior is determined by the binary presentation and its interpretation, that is, whether or not the number is signed.

Points to Remember

1. The behavior of a data type can be analyzed according to its binary representation.
2. In the case of binary representation, you have to determine whether the number is positive or negative.

Previous Next

ABC Amber CHM Converter Trial version, http://www.processtext.com/abcchm.html

OVERFLOW IN `char` AND UNSIGNED `char` DATA TYPES

Introduction

Overflow means you are carrying out an operation such that the value either exceeds the maximum value or is less than the minimum value of the data type.

Program

```
// the program gives maximum and minimum values of data type
#include <stdio.h>
main()
{
char i,j ;
i = 1;
while (i > 0) // A
{
j = i; // B
i++; // C
}
printf ("the maximum value of char is %d\n",j);
printf ("the value of char after overflow is %d\n",i);
}
```

Explanation

1. This program is used to calculate the maximum positive value of `char` data type and the result of an operation that tries to exceed the maximum positive value.
2. The `while` loop is terminated when the value of `i` is negative, as given in statement A. This is because if you try to add 1 to the maximum value you get a negative value, as explained previously (127 + 1 gives –128).
3. The variable `j` stores the previous value of `i` as given in statement B.
4. The program determines the maximum value as 127. The value after overflow is -128.
5. The initial value of `i` is 1 and it is incremented by 1 in the `while` loop. After `i` reaches 127, the next value is -128 and the loop is terminated.

Points to Remember

1. In the case of signed `char`, if you continue adding 1 then you will get the maximum value, and if you add 1 to the maximum value then you will get the most negative value.
2. You can try this program for `short` and `int`, but be careful when you are using `int`. If the implementation is 4 bytes it will take too much time to terminate the `while` loop.
3. You can try this program for unsigned `char`. Here you will get the maximum value, 255. The value after overflow is 0.

ABC Amber CHM Converter Trial version, http://www.processtext.com/abcchm.html

THE `char` TYPE

Introduction

Alpha characters are stored internally as integers. Since each character can have 8 bits, you can have 256 different character values (0–255). Each integer is associated with a character using a character set. The most commonly used character set is ASCII. In ASCII, "A" is represented as decimal value 65, octal value 101, or hexadecimal value 41.

Explanation

If you declared `c` as a character as

```
char c;
```

then you can assign A as follows:

```
c = 'A';
c = 65;
c = '\x41';    // Hexadecimal representation
c = '\101';    // Octal representation
```

You cannot write `c = 'A'` because `'A'` is interpreted as a string.

Escape Sequence

Certain characters are not printable but can be used to give directive to functions such as `printf`. For example, to move printing to the next line you can use the character "\n". These characters are called escape sequences. Though the escape sequences look like two characters, each represents only a single character.

The complete selection of escape sequences is shown here.

\a	alert (bell) character	****	backslash
\b	backspace	**\?**	question mark
\f	form feed	**\'**	single quote
\n	new line	**\"**	double quote
\r	carriage return	**\ooo**	octal number
\t	horizontal tab	**\xhh**	hexadecimal number
\v	vertical tab		

Points to Remember

1. Characters are stored as a set of 255 integers and the integer value is interpreted according to the character set.
2. The most common character set is ASCII.
3. You can give directive to functions such as `printf` by using escape sequence characters.

ABC Amber CHM Converter Trial version, http://www.processtext.com/abcchm.html

OCTAL NUMBERS

Introduction

You can represent a number by using the octal number system; that is, base 8. For example, if the number is 10, it can be represented in the octal as 12, that is, $1*8^1 + 2*8^0$.

Explanation

When octal numbers are printed they are preceeded by "`%0`".

ABC Amber CHM Converter Trial version, http://www.processtext.com/abcchm.html

HEXADECIMAL NUMBERS

Introduction

Hexadecimal numbers use base 16. The characters used in hexadecimal numbers are 0, 1, 2, 3, 4, 5, 6, 7, 8, 9, A, B, C, D, E, and F. For example, if the decimal number is 22, it is represented as 16 in the hexadecimal representation: $1*16^1 + 6*16^0$.

Explanation

You can print numbers in hexadecimal form by using the format "`0x`".

ABC Amber CHM Converter Trial version, http://www.processtext.com/abcchm.html

REPRESENTATION OF FLOATING-POINT NUMBERS

Introduction

Floating-point numbers represent two components: one is an exponent and the other is fraction. For example, the number 200.07 can be represented as $0.20007*10^3$, where 0.2007 is the fraction and 3 is the exponent. In a binary form, they are represented similarly. There are two types of representation: `short` or single-precision floating-point number and `long` or double-precision floating-point number. `short` occupies 4 bytes or 32 bits while `long` occupies 8 bytes or 64 bits.

Program/Example

In C, `short` or single-precision floating point is represented by the data type `float` and appears as:

```
float f ;
```

A single-precision floating-point number is represented as follows:

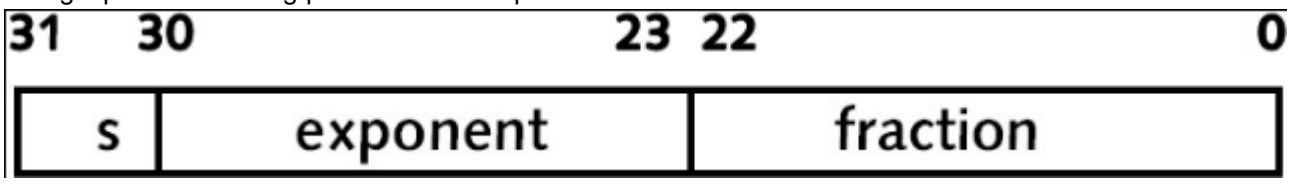

Here the fractional part occupies 23 bits from 0 to 22. The exponent part occupies 8 bits from 23 to 30 (bias exponent, that is, exponent + 01111111). The sign bit occupies the 31st bit.

Suppose the decimal number is 100.25. It can be converted as follows:

1. Convert 100.25 into its equivalent binary representation: 1100100.01.
2. Then represent this number so that there is only 1 bit on the left side of the decimal point: $1.0010001*2^6$
3. In a binary representation, exponent 6 means the number 110. Now add the bias, 0111 1111, to get the exponent: 1000 0101

Since the number is positive, the sign bit is 0. The significant, or fractional, part is:

1001 0001 0000 0000 0000 000

Note that up until the fractional part, only those bits that are on the right side of the decimal point are present. The 0s are added to the right side to make the fractional part take up 23 bits.

Special rules are applied for some numbers:

1. The number 0 is stored as all 0s, but the sign bit is 1.
2. Positive infinity is represented as all 1s in the exponent and all 0s in the fractional part with the sign bit 0.
3. Negative infinity is represented as all 1s in the exponent and all 0s in fractional part with the sign bit 1.
4. A NAN (not a number) is an invalid floating number in which all the exponent bits are 1, and in the fractional part you may have 1s or 0s.

The range of the float data type is 10^{-38} to 10^{38} for positive values and -10^{38} to -10^{-38} for negative values.

The values are accurate to 6 or 7 significant digits depending on the actual implementation.

Conversion of a number in the floating-point form to a decimal number

Suppose the number has the following components:

a. Sign bit: 1

b. Exponent: 1000 0011
c. Significant or fractional part: 1001 0010 0000 0000 0000 000

Since the exponent is bias, find out the unbiased exponent.

d. 100 = 1000 0011 – 0111 1111 (number 4)

Represent the number as $1.1001001*2^4$

Represent the number without the exponent as 11001.001

Convert the binary number to decimal: _25.125

For double precision, you can declare the variable as double d; it is represented as

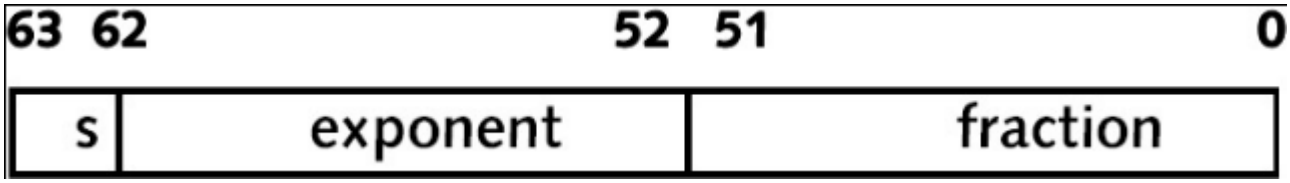

Here the fractional part occupies 52 bits from 0 to 51. The exponent part occupies 11 bits from 52 to 62 (the bias exponent is the exponent plus 011 1111 1111). The sign bit occupies bit 63. The range of double representation is $+10^{-308}$ to $+10^{308}$ and -10^{308} to -10^{-308}. The precision is to 10 or more digits.

Formats for representing floating points

Following are the valid representions of floating points:

```
0.23456
2.3456E-1
 .23456
 .23456e-2
2.3456E-4
-.232456E-4
2345.6
23.456E2
-23456
23456e3
```

Following are the invalid formats:

```
e1
 2.5e-.5
25.2-e5
 2.5.3
```

You can determine whether a format is valid or invalid based on the following rules:

1. The value can include a sign, it must include a numerical part, and it may or may not have exponent part.
2. The numerical part can be of following form:

   `d.d`, `d.`, `.d`, `d`, where `d` is a set of digits.
3. If the exponent part is present, it should be represented by ‘e’ or ‘E’, which is followed by a positive or negative integer. It should not have a decimal point and there should be at least 1 digit after ‘E’.
4. All floating numbers have decimal points or ‘e’ (or both).

5. When ‘e’ or ‘E’ is used, it is called scientific notation.
6. When you write a constant, such as 50, it is interpreted as an integer. To interpret it as floating point you have to write it as 50.0 or 50, or 50e0.

You can use the format `%f` for printing floating numbers. For example, `printf("%f\n", f);`

`%f` prints output with 6 decimal places. If you want to print output with 8 columns and 3 decimal places, you can use the format `%8.3f`. For printing double you can use `%lf`.

Floating-point computation may give incorrect results in the following situations:

1. If the calculated value has a precision that exceeds the precision limit of the type;
2. If the calculated value exceeds the range allowable for the type;
3. If the two calculated values involve approximation then their operation may involve approximation.

Points to Remember

1. C provides two main floating-point representations: float (single precision) and double (double precision).
2. A floating-point number has a fractional part and a biased exponent.
3. Float occupies 4 bytes and double occupies 8 bytes.

Previous Next

ABC Amber CHM Converter Trial version, http://www.processtext.com/abcchm.html

TYPE CONVERSION

Introduction

Type conversion occurs when the expression has data of mixed data types, for example, converting an integer value into a float value, or assigning the value of the expression to a variable with different data types.

Program/Example

In type conversion, the data type is promoted from lower to higher because converting higher to lower involves loss of precision and value.

For type conversion, C maintains a hierarchy of data types using the following rules:

1. Integer types are lower than floating-point types.
2. Signed types are lower than unsigned types.
3. Short whole-number types are lower than longer types.
4. The hierarchy of data types is as follows: double, float, long, int, short, char.

These general rules are accompanied by specific rules, as follows:

1. If the mixed expression is of the double data type, the other operand is also converted to double and the result will be double.
2. If the mixed expression is of the unsigned long data type, then the other operand is also converted to double and the result will be double.
3. Float is promoted to double.
4. If the expression includes long and unsigned integer data types, the unsigned integer is converted to unsigned long and the result will be unsigned long.
5. If the expression contains long and any other data type, that data type is converted to long and the result will be long.
6. If the expression includes unsigned integer and any other data type, the other data type is converted to an unsigned integer and the result will be unsigned integer.
7. Character and short data are promoted to integer.
8. Unsigned char and unsigned short are converted to unsigned integer.

ABC Amber CHM Converter Trial version, http://www.processtext.com/abcchm.html

FORCED CONVERSION

Introduction

Forced conversion occurs when you are converting the value of the larger data type to the value of the smaller data type, for example, if the declaration is `char c;`

and you use the expression `c = 300;` Since the maximum possible value for `c` is 127, the value 300 cannot be accommodated in `c`. In such a case, the integer 300 is converted to `char` using forced conversion.

Program/Example

In general, forced conversion occurs in the following cases:

1. When an expression gives a larger data type but the variable has a smaller data type.
2. When a function is written using a smaller data type but you call the function by using larger data type. For example, in `printf` you specify `%d`, but you provide floating-point value.

Forced conversion is performed according to following rules:

1. Normally, when floating points are converted to integers, truncation occurs. For example, 10.76 is converted to 10.
2. When double is converted to float, the values are rounded or truncated, depending on implementation.
3. When longer integers are converted to shorter ones, only the lower bits are preserved and high-order bits are skipped. For example, the bit representation of 300 is 1 0010 1100. If it is assigned to character, the lower bits are preserved since a character can have 8 bits. So you will get the number 0010 1100 (44 in decimal).

In the case of type conversion, lower data types are converted to higher data types, so it is better to a write a function using higher data types such as `int` or `double` even if you call the function with `char` or `float`. C provides built-in mathematical functions such as `sqrt` (square root) which take the argument as double data type. Suppose you want to call the function by using the integer variable '`k`'. You can call the function

```
sqrt((double) n)
```

This is called *type casting*, that is, converting the data type explicitly. Here the value 'k' is properly converted to the double data type value.

Points to Remember

1. C makes forced conversion when it converts from higher data type to lower data type.
2. Forced conversion may decrease the precision or convert the value to one that doesn't have a relation with the original value.
3. Type casting is the preferred method of forced conversion.

ABC Amber CHM Converter Trial version, http://www.processtext.com/abcchm.html

TYPE CASTING

Introduction

Type casting is used when you want to convert the value of a variable from one type to another. Suppose you want to print the value of a double data type in integer form. You can use type casting to do this. Type casting is done to cast an operator which is the name of the target data type in parentheses.

Program

```
   #include <stdio.h>
   main()
   {
   double d1 = 123.56;  \\ A
   int i1=456;                 \\ B

   printf("the value of d1 as int without cast operator %d\n",d1); \\ C
   printf("the value of d1 as int with cast operator %d\n",(int)d1);
\\ D
   printf("the value of i1 as double without cast operator %f\n",i1); \\
E
   printf("the value of i1 as double with cast operator %f\n",(double)i1);
\\ F
   i1 = 10;
   printf("effect of multiple unary operator %f\n",(double)++i1);  \\ G
   i1 = 10;     \\ H
   //printf("effect of multiple unary operator %f\n",(double) ++ -i1);
error  \\ I i1 = 10;
   printf("effect of multiple unary operator %f\n",(double)- ++i1);\\ J
   i1 = 10;     \\ K
   printf("effect of multiple unary operator %f\n",(double)- -i1); \\ L
   i1 = 10;     \\ M
   printf("effect of multiple unary operator %f\n",(double)-i1++); \\ N

   }
```

Explanation

1. Statement A defines variable `d1` as double.
2. Statement B defines variable `i1` as int.
3. Statement C tries to print the integer value of `d1` using the placeholder `%d`. You will see that some random value is printed.
4. Statement D prints the value of `d1` using a cast operator. You will see that it will print that value correctly.
5. Statements E and F print the values of i1 using a cast operator. These will print correctly as well.
6. Statements from G onwards give you the effects of multiple unary operators. A cast operator is also a unary operator.
7. Unary operators are associated from right to left, that is, the left unary operator is applied to the

right value.

8. Statement G gives the effect of the cast operator double. The increment operator, in this case `i1`, is first incremented and then type casting is done.
9. If you do not comment out statement I you will get errors. This is because if unary +, – is included with the increment and decrement operator, it may introduce ambiguity. For example, +++i may be taken as unary + and increment operator ++, or it may be taken as increment operator ++ and unary +. Any such ambiguous expressions are not allowed in the language.
10. Statement J will not introduce any error because you put the space in this operator, which is used to resolve any ambiguity.

Points to Remember

1. Type casting is used when you want to convert the value of one data type to another.
2. Type casting does not change the actual value of the variable, but the resultant value may be put in temporary storage.
3. Type casting is done using a cast operator that is also a unary operator.
4. The unary operators are associated from right to left.

Previous Next

ABC Amber CHM Converter Trial version, http://www.processtext.com/abcchm.html

Chapter 3: C Operators

ASSIGNMENT OPERATOR

Introduction

The assignment operator is used for assigning the value of an expression to a variable. The general format for an assignment operator is var = expression.

You can use other formats such as `var +=` expression, which means `var = var +` expression.

Program

```
#include<stdio.h>

main( )
{
  int a,b,c,d;
  printf("ENTER VALUES OF a,b, c, d");
  scanf("%d%d%d",&a,&b,&c);
   a += b*c+d;
  printf("\n a = %d",a);
  }

Input
a = 5, b= 5, c = 7, d = 8.
Output
ENTER VALUES OF a,b, c, d
5
5
7
8
a =  48
```

Explanation

The assignment operators have the lowest priority and they are evaluated from right to left. The assignment operators are as follows:

```
=, +=, -=, *=, /=, %=.
```

Suppose the expression is

```
a = 5;
a += 5*7+8;
```

You will get the value 48. It is evaluated by the following steps:

1. `5*7` = 35.

2. `35+8` = `43`.
3. `a += 43` means `a = a + 43` which gives the value 48.

You can assign a value to multiple variables in one statement as:
`i = j = k = 10` which gives value `10` to `i, j, k`.

Previous Next

ABC Amber CHM Converter Trial version, http://www.processtext.com/abcchm.html

ARITHMETIC OPERATOR

Introduction

You can process data using arithmetic operators such as `+, -, *, \` and the modulus operator `%`. `%` indicates the remainder after integer division; `%` cannot be used for float data type or double data type. If both operands `i1` and `i2` are integers, the expression `i1/i2` provides integer division, even if the target is a floating point variable. The operators have normal precedence rules, as follows:

1. Unary operators such as –, + are evaluated.
2. The multiplication (*) and division (/,%) operators are evaluated.
3. The addition (+) and subtraction (–) operators are evaluated.
4. The assignment operator is evaluated.
5. The expressions are evaluated from left to right for unary operators. The assignment is from right to left.

Program

```
#include<stdio.h>

main( )
{
  int a,b,c,d;
  int sum,sub,mul,rem;
  float div;
   printf("ENTER VALUES OF b, c, d");
    scanf("%d%d%d",&b&c,&d);
  sum = b+c;
  sub = b-c;
  mul = b*c;
  div = b/c;
  rem = b%d;
  a = b/c * d;
  printf("\n sum = %d, sub = %d, mul = %d, div = %f",sum,sub,mul,div);
  printf("\n remainder of division of b & d is %d",rem);
  printf("\n a = %d",a);
  }
```

Input

```
b = 10, c = 5, d= 3.
```

Output

```
ENTER VALUES OF b, c, d
10
5
```

```
3

sum = 15, sub = 5, mul = 50, div = 2.0
remainder of division of b & d is 1
a = 6
```

Explanation

1. Suppose you have the expression
2.
3. `a = b/c * d`

   Here `/` and `*` both have the same priority. `b/c` first is evaluated because the expression is evaluated from left to right.
4. After evaluating the expression `b/c * d`, the value is assigned to `a` because the assignment operator has an order of evaluation from right to left, that is, the right expression is evaluated first.

Previous Next

ABC Amber CHM Converter Trial version, http://www.processtext.com/abcchm.html

RELATIONAL OPERATOR

Introduction

Relational operators are used in Boolean conditions or expressions, that is, the expressions that return either true or false. The relational operator returns zero values or nonzero values. The zero value is taken as false while the nonzero value is taken as true.

Program

Th relational operators are as follows:

```
<, <=, >, >=, ==, !=
```

The priority of the first four operators is higher than that of the later two operators. These operators are used in relational expressions such as:

```
7 > 12        // false
20.1 < 20.2      // true
'b' < 'c'    // true
"abb" < "abc"  // true
```

The strings are compared according to dictionary comparison, so if the first characters are equal, the condition is checked for the second characters. If they are also equal then it is checked for the third character, etc. The relational operators return integer values of either zero or non zero.

Note that the equality operator is `==` and not `=`. '=' is an assignment operator.

If you want to compare `a` and `b` for equality then you should write `a == b`, not `a = b` because `a = b` means you are assigning the value of `b` to `a`, as shown in Table 3.1.

Table 3.1: Comparing the equality operator (= =) with the '=' assignment operator.

Case	a	b	a = b	a == b
1	5	3	**a** = 3 (true)	false
2	7	0	**a** = 0 (false)	false
3	0	0	**a** = 0 (false)	true

In case 1, the value of `a` = 5 and `b` = 3. The assignment expression assigns the value of `b` to `a`, so `a` will be 3. The expression returns a true value because 3 is not zero. For the same case `a == b` does not make any assignment and returns a false value because in the value of `a` does not equal that of `b`.

In case 2, the value of `a` = 7 and `b` = 0. The assignment expression assigns the value of `b` to `a`, so `a` will be 0. The expression returns a false value of zero. For the same case, `a == b` does not make any assignment and returns a false value because the value of `a` does not equal that of `b`.

In case 3, the values of `a` and `b` are both 0. The assignment expression assigns the value of `b` to `a`, so `a` will be 0. The expression returns a false value of zero. For the same case, `a == b` does not make any assignment and returns a true value because the value of `a` equals that of `b`.

ABC Amber CHM Converter Trial version, http://www.processtext.com/abcchm.html

LOGICAL OPERATOR

Introduction

You can combine results of multiple relations or logical operations by using logical operation. The logical operators are negation `(!)`, logical `AND` `(&&)`, and logical OR `(||)`, in the same order of preference.

Program

```
#include<stdio.h>

main( )
{
  int c1,c2,c3;

printf("ENTER VALUES OF c1, c2 AND c3");
scanf("%d%d%d",&c1.&c2,&c3);
 if((c1 < c2)&&(c1<c3))
  printf("\n c1 is less than c2 and c3");
if (!(c1< c2))
 printf("\n c1 is greater than c2");
if ((c1 < c2)||(c1 < c3))
 printf("\n c1 is less than c2 or c3 or both");
}
```

Input

```
c1= 2;
c2= 3;
c3= 4;
```

Output

```
ENTER VALUES OF c1, c2 AND c3
2
3
4
c1 is less than c2 and c3
c1 is less than c2 or c3 or both
```

Explanation

1. Logical `AND` returns a true value if both relational expressions are true. Logical `OR` returns true if any of the expressions are true. Negations return complements of values of relational expressions, as shown in Table 3.2.

Table 3.2: Results of AND, OR, and Negation.

R1	R2	R1 && R2	R1 || R2	! R1
T	T	T	T	F
T	F	F	T	F
F	T	F	T	T
F	F	F	F	T

2. Logical operators AND, and OR have higher priority than assignment operators, but less than relational operators. Negation operators have the same priority as unary operators, that is, the highest priority.
3. While evaluating logical expressions, C uses the technique of short circuiting. So if the expression is:
4.
5. `C1 && C2 && C3 && C4 if C1 is true`

then only C2 is evaluated. If C1 is false, the expression returns false even if C2, C3, and C4 are true. So if C1 is false C2, C3, and C4 are not evaluated. Remember this when you are doing something such as searching in an array. For example, if you want to search for K in an array, the last value of which is subscript N, you can write the search condition in two ways:

```
I - (a [i] == K) && (i <= N)
II - (i <= N) && (a[i] == K)
```

6. In case I you compare the array limit with K and check the bound. This is not correct because if the value of i is more than N you will get the array index out-of-bounds error.
7. In case II, you first check the bound and then compare the array element. This is correct because you will never compare the array element if value of i is more than N.

The technique of short-circuiting is applicable to the OR operator also. Thus if the expression is:

```
C1 || C2 || C3 || C4 if C1 is true
```

then the expression returns true and C2, C3 and C4 are not evaluated.

Previous Next

ABC Amber CHM Converter Trial version, http://www.processtext.com/abcchm.html

TERNARY OPERATOR

Introduction

Ternary operators return values based on the outcomes of relational expressions. For example, if you want to return the value of 1 if the expression is true and 2 if it is false, you can use the ternary operator.

Program/Example

If you want to assign the maximum values of `i` and `j` to `k` then you can write the statement

```
k = ( i>j ) ? i : j;
```

If `i > j` then `k` will get the value equal to `i`, otherwise it will get the value equal to `j`.

The general form of the ternary operator is:

```
(expr 1) ? expr2 : expr3
```

If `expr1` returns true then the value of `expr2` is returned as a result; otherwise the value of `expr3` is returned.

ABC Amber CHM Converter Trial version, http://www.processtext.com/abcchm.html

INCREMENT OPERATOR

Introduction

You can increment or decrement the value of variable using the increment or decrement operator. These operators can be applied only to variables and they can be applied using prefix form or postfix form.

Program

```
#include<stdio.h>

main( )
{
int I,j,k;
i = 3;
j =4;
k = i++ + --j;
printf("i = %d, j = %d, k = %d",i,j,k);
}
```

Input

```
i =3, j = 4.
```

Output

```
i = 4, j = 3, k = 6.
```

Explanation

When the prefix form is used, the value of the variable is incremented/decremented first and then applied. In the postfix form, the value is applied and only after the assignment operator is done is the value incremented or decremented.

1. Suppose you write
2.
3. `i = 3;`
4. `j =4;`
5. `k = i++ + -j;`

   you will get the value of `k` as 6, `i` as 4 and `j` as 3. The order of evaluation is as follows:
   1. `i` gets the value 3.
   2. `j` is decremented to 3.
   3. `k` gets the value 3 + 3.
   4. `i` is incremented.
6. Suppose you write
7.
8. `i = 5;`
9. `i = i++ * i++`

Then you will get the value of `i` as 27. This is because first the value 5 is used as to make `i = 25` and then `i` is incremented twice. The increment and decrement operators have higher priority than the arithmetic operators.

ABC Amber CHM Converter Trial version, http://www.processtext.com/abcchm.html

ABC Amber CHM Converter Trial version, http://www.processtext.com/abcchm.html

COMMA OPERATOR

Introduction

You can combine multiple expressions in a single expression using the comma operator.

Program

```
#include<stdio.h>

main()
{
  int i,j,k;
  k = (i = 4, j = 5);
  printf("k = %d",k);
 }
```

Input

```
i = 4,j = 5.
```

Output

```
k = 5.
```

Explanation

For example, you can write: `k = (i = 4, j = 5)`

Here the expression is evaluated from left to right, that is, `i = 4` is evaluated first then `j = 5` is evaluated. The value of the rightmost expression is specified as output, thus `k` will get the value 5.

ABC Amber CHM Converter Trial version, http://www.processtext.com/abcchm.html

BITWISE OPERATOR

Introduction

Bitwise operators interpret operands as strings of bits. Bit operations are performed on this data to get the bit strings. These bit strings are then interpreted according to data type. There are six bit operators: bitwise `AND(&)`, bitwise `OR(|)`, bitwise `XOR(^)`, bitwise `complement(~)`, `left shift(<<)`, and `right shift(>>)`.

Program

```
# include<stdio.h>

main()
{
  char c1,c2,c3;
  printf("ENTER VAULES OF c1 and c2");
  scanf("%c,%c",&c1,&c2);
  c3 = c1 & c2;
  printf("\n Bitwise AND i.e. c1 & c2 = %c",c3);
  c3 = c1 | c2;
  printf("\n Bitwise OR i.e. c1 | c2 = %c",c3);
  c3 = c1 ^ c2;
  printf("\n Bitwise XOR i.e. c1 ^ c2 = %c",c3);
  c3 = ~c1;
  printf("\n ones complement of c1 = %c",c3);
  c3 = c1<<2;
  printf("\n left shift by 2 bits c1 << 2 = %c",c3);
  c3 = c1>>2;
  printf("\n right shift by 2 bits c1 >> 2 = %c",c3);
}
```

Input

```
c1 = 4;
c2 = 6;
```

Output

```
ENTER VALUES OF c1 and c2
4
6

Bitwise AND i.e. c1 & c2 = 4
Bitwise OR i.e. c1 | c2 = 6
Bitwise XOR i.e. c1 ^ c2 = 2
```

```
ones compliment of c1 = -4
left shift by 2 bits c1 << 2 = 16
right shift by 2 bits c1 >> 2 = 1
```

Explanation

1. Suppose you write
2.
3. `char c1, c2, c3;`
4. `c1 = 4;`
5. `c2 = 6;`

   The binary values are

   ```
   c1 = 0000 0100
   c2 = 0000 0110
   ```

6. Suppose you write
7.
8. `c3 = c1 & c2;`

   The value of `c3` is interpreted as follows:

   ```
     0000 0100
   & 0000 0110
    ----------.
     0000 0100
   ```

   Each bit of `c1` is compared with the corresponding bit of `c2`. If both bits are 1 then the corresponding bit is set as 1, otherwise it is set as 0. Thus the value of `c3` is 4.
9. `c3 = c1 | c2`

   The value of `c3` is interpreted as follows:

   ```
     0000 0100
   | 0000 0110
    -----------.
     0000 0110
   ```

   Each bit of `c1` is compared with the corresponding bit of `c2`. If any of the bits are 1 then the corresponding bit is set as 1; otherwise it is set as 0. Thus the value of `c3` is 6.
10. `c3 = c1 ^ c2`

    The value of `c3` is interpreted as follows:

    ```
      0000 0100
    ^ 0000 0110
     ----------.
      0000 0010
    ```

    Each bit of c1 is compared with the corresponding bit of c2. If only one bit is 1, the corresponding bit is set to 1; otherwise it is set to 0. Thus you will get the value of `c3` as 2 because in the second position for `c1`, the bit is 0 and for `c2`, the bit is 1. So only one bit is set.
11. `c3 = ~ c1`

The value of `c3` is interpreted as follows:

```
~  0000 0100
   ----------.
   1111 1011
```

Each bit of `c1` is complemented; for 1 the complement is 0. Thus you will get the value of `c3` as –4, because the leftmost bit is set as 1.

12. `c3 = c1 << 2;`

This is a left-shift operation. The bits are shifted left by two places. `c1` indicates the operand that should be an expression returning a whole number. 2 indicates a shift that should not be negative, and its value must be less than the number of bits allocated to that data type.

It is evaluated as follows:

```
c1 is 0000 0100
```

It is shifted 2 bits to the left to produce

```
0001 00**
```

While shifting, the high-order (left) bits are discarded. Since a vacuum is created on the right side, it is filled with 0s to get 0001 0000. Thus the value is 16.

13. `c3 = c1 >> 2;`

This is a right shift operation. The bits are shifted right by two places. `c1` indicates the operand that should be an expression returning a whole number. 2 indicates a shift that should not be negative, and its value must be less than the number of bits allocated to that data type.

It is evaluated as follows:

```
c1 is 0000 0100
```

It is shifted 2 bits to the right to produce

```
**00 0001
```

While shifting, the low-order (right) bits are discarded. The asterisks are replaced using one of the following strategies:

Logical shift: In this case, the high-order bits are filled with 0s, thus you get 0000 0001.

Arithmetic shift: In this case the high-order bits are filled with the original sign bits, so if the sign bit is 1, then all bits are filled with 1s; otherwise, they are filled with 0s.

For unsigned data types, logical shift is used, whereas for signed data types arithmetic shift is used.

In these examples, the `char` data type which is signed is used. In number 4, the sign bit is 0, so you will get the bit pattern 0000 0001 (decimal 1).

Previous Next

ABC Amber CHM Converter Trial version, http://www.processtext.com/abcchm.html

OPERATOR PRECEDENCE

Introduction

Since C has various types of operators, it also sets precedence rules so that the value of expressions that involve multiple operators should be deterministic.

Program

The precedence of operators is given in Table 3.3.

Table 3.3: Operator precedence rules

Operators	Order of evaluation	Remarks
[] ( ) ->	Left to right	Array subscript, function call
_ + sizeof( ) ! ++ __		
& * ~ (cast)	Right to left	Unary
* / %	Left to right	Binary Multiplicative
+ -	Left to right	Binary Additive
>> <<	Left to right	Shift operators
< <= > >=	Left to right	Relational operators
== !=	Left to right	Equality operators
&	Left to right	Bitwise And operator
^	Left to right	Bitwise Xor operator
|	Left to right	Bitwise Or operator
&&	Left to right	Logical And operator
||	Left to right	Logical Or operator
?:	Left to right	Conditional operator
= += -= *= /= %=		
&= -= |= <<= >>=	Right to left	Assignment
,	Right to left	Comma

Point to Remember

The operators are evaluated according to the precedence as shown in Table 3.3.

ABC Amber CHM Converter Trial version, http://www.processtext.com/abcchm.html

Chapter 4: Control Structures

CONTROL STRUCTURES

Introduction

C provides four general categories of control structures: sequential, selection, iteration and encapsulation.

Program/Example

A *sequential* structure is one in which instructions are executed in sequence. For example,

```
i = i + 1;
j = j + 1;
```

In the selection structure, the sequence of the instruction is determined by using the result of the condition. The statements that can be used in this category are `if` and `switch`. For example:

```
if (a > b)
    i = i + 1;
else
    j = j +1;
```

If the condition is true then the statement `i = i +1` is executed; otherwise `j = j + 1` is executed.7

The iteration structure is one in which statements are repeatedly executed. The iteration structure forms program loops. The number of iterations generally depends on the values of particular variables.

```
for (i=0; i<5; i++)
{
    j = j + 1;
}
```

The statement `j = j + 1` is executed 5 times and the value of `i` changes from 0 to 1, 2, 3, and 4.

Encapsulation structure is the structure in which the other component structures are included. For example, you can include an `if` statement in a `for` loop or a `for` loop in an `if` statement.

Explanation

C provides all the standard control structures that are available in programming languages. These structures are capable of processing any information.

ABC Amber CHM Converter Trial version, http://www.processtext.com/abcchm.html

THE `if` STATEMENT

Introduction

The `if` statement is the first selection structure. `if` is used when a question requires a yes or no answer. If you want to choose an answer from several possibilities then use the `switch` statement.

Program/Example

The general format for an `if` statement is:

```
if ( condition )
simple or compound statement.
```

Following are the properties of an `if` statement:

1. If the condition is true then the simple or compound statements are executed.
2. If the condition is false it does not do anything.
3. The condition is given in parentheses and must be evaluated as true (nonzero value) or false (zero value).
4. If a compound statement is provided, it must be enclosed in opening and closing braces.

Following are the test conditions:

```
    (7)// a non-zero value returns True.
(0)// zero value returns False.
(i==0)     // True if i=0 otherwise False.
(i = 0)     // False because value of the expression is
zero.
```

ABC Amber CHM Converter Trial version, http://www.processtext.com/abcchm.html

SCOPE OF AN `if` CLAUSE

The scope of an `if` clause determines a range over which the result of the condition affects. The scope of an `if` clause is on the statement which immediately follows the `if` statement. It can be a simple statement or compound statement.

Case 1:

```
if (a>b)
i = i + 1;     // s1
j = j + 1;     // s2
```

Case 2:

```
if (a>b)
{
  i = i + 1; // s1
  j = j + 1; // s2
}
```

If in Case 1 the `if` condition is true, then `s1` is executed because `s1` is a simple statement.

If in Case 2 the `if` condition is true, then both statements `s1` and `s2` are executed because `s1` and `s2` are enclosed in a compound statement.

ABC Amber CHM Converter Trial version, http://www.processtext.com/abcchm.html

THE `if-else` STATEMENT

Introduction

When you want to take actions based on the outcome of the conditions, (true or false), then you can use the `if-else` statement.

Program/Example

The general format for an `if-else` statement is

```
if (condition)
simple or compound statement   // s1
else
simple or compound statement.  // s2
```

If the condition is true then the `s1` part is executed and if the condition is false then the `s2` part is executed. For example,

```
if (a>b)
printf (" big number is %d", a);   // s1
else
printf (" big number is %d", b);   // s2
```

if `a` is greater than (`b`) then `s1` is executed. Otherwise `s2` is executed.

ABC Amber CHM Converter Trial version, http://www.processtext.com/abcchm.html

THE `if-else if` STATEMENT

Introduction

If you want to make many decisions, then you can use the `if-else if` statement.

Program

The general format for the `if-else if` statement is:

```
if (condition 1)
simple or compound statement   // s1
else if (condition 2)
simple or compound statement   // s2
else if ( condition 3)
simple or compound statement   // s3
.....
else if ( conditon n )
simple or compound statement   // sn
```

If condition 1 is true then `s1` is executed. If condition 1 is false and condition 2 is true then `s2` is executed.

The `else` clause is always associated with the nearest unresolved `if` statement.

```
if (a==5)          // A
if (a==7)          // B
     i = 10;  // C
else          // D
 if (a == 7)  // E
     i = 15;  // F
else          // G
     i = 20;  // H
```

For the `else` statement at position D, the nearest `if` statement is specified at B. So, the `else` statement is associated with `if` at B and not at A.

For the `else` statement at G, the nearest `if` statement is specified at E. So, it is associated with the `if` statement at E and not at A.

```
if (a==5)           // A
if (a==7)           // B
    i = 10;   // C
else          // D
 if (a == 7)  // E
     i = 15;      // F1
     j = 20;      // F2
else          // G
```

```
i = 20;  // H
```

In this case, the `else` statement at G cannot be associated with the `if` statement at E because the `if` statement at E is already resolved. So, it is associated with the `if` statement at A.

Points to Remember

1. You can use `if-else if` when you want to check several conditions but still execute one statement.
2. When writing an `if-else if` statement, be careful to associate your `else` statement to the appropriate `if` statement.
3. You must have parentheses around the condition.
4. You must have a semicolon or right brace before the `else` statement.

Previous Next

ABC Amber CHM Converter Trial version, http://www.processtext.com/abcchm.html

THE switch STATEMENT

Introduction

You can use a switch statement when you want to check multiple conditions. It can also be done using an if statement but it will be too lengthy and difficult to debug.

Program/Example

The general format for a switch statement is

```
switch (expressions)
{
case constant expressions
}
```

Example of a case constant expression and column:

```
switch (i/10)
{
    case 0: printf ("Number less than 10");    // A
                break;
    case 1: printf ("Number less than 20");     // B
                break;
    case 2: printf ("Number less than 30");    // C
                break;
    default: printf ("Number greater than or equal to 40");    // D
                break; }
```

Explanation

1. The switch expression should be an integer expression and, when evaluated, it must have an integer value.
2. The case constant expression must represent a particular integer value and no two case expressions should have the same value.
3. The value of the switch expression is compared with the case constant expression in the order specified, that is, from the top down.
4. The execution begins from the case where the switch expression is matched and it flows downward.
5. In the absence of a break statement, all statements that are followed by matched cases are executed. So, if you don't include a break statement and the number is 5, then all the statements A, B, C, and D are executed.
6. If there is no matched case then the default is executed. You can have either zero or one default statement.
7. In the case of a nested switch statement, the break statements break the inner switch statement.

Point to Remember

The switch statement is preferable to multiple if statements.

ABC Amber CHM Converter Trial version, http://www.processtext.com/abcchm.html

ABC Amber CHM Converter Trial version, http://www.processtext.com/abcchm.html

THE `while` LOOP

Introduction

The `while` loop is used when you want to repeat the execution of a certain statement or a set of statements (compound statement).

Program/Example

The general format for a `while` loop is

```
    while (condition)
    simple or compound statement (body of the loop)
    For example,
i = 0;
while (i<5)
{
    printf(" the value of i is %d\n", i);
    i = i + 1;
}
```

Explanation

1. Before entering into the loop, the `while` condition is evaluated. If it is true then only the loop body is executed.
2. Before making an iteration, the `while` condition is checked. If it is true then the loop body is executed.
3. It is the responsibility of the programmer to ensure that the condition is false after certain iterations; otherwise, the loop will make infinite iterations and it will not terminate.
4. The programmer should be aware of the final value of the looping variable. For example, in this case, the final value of the looping variable is 5.
5. While writing the loop body, you have to be careful to decide whether the loop variable is updated at the start of the body or at the end of the body.

ABC Amber CHM Converter Trial version, http://www.processtext.com/abcchm.html

THE do-while LOOP

Introduction

The do-while loop is used when you want to execute the loop body at least once. The do-while loop executes the loop body and then traces the condition.

Program/Example

The general format for a do-while loop is

```
do
    simple or compound statement
    while (condition)
    For example,
i = 0;
do
{
    printf(" the value of i is %d\n", i);
    i = i + 1;
}
while (i<5)
```

Explanation

1. The loop body is executed at least once.
2. The condition is checked after executing the loop body once.
3. If the condition is false then the loop is terminated.
4. In this example, the last value of i is printed as 5.

ABC Amber CHM Converter Trial version, http://www.processtext.com/abcchm.html

THE `for` LOOP

Introduction

The `for` loop is used only when the number of iterations is predetermined, for example, 10 iterations or 100 iterations.

Program/Example

The general format for the `for` loop is

```
    for  (initializing; continuation condition; update)
    simple or compound statement
    For example,
for (i = 0; i < 5; i++)
{
    printf("value of i");
}
```

Explanation

1. The `for` loop has four components; three are given in parentheses and one in the loop body.
2. All three components between the parentheses are optional.
3. The initialization part is executed first and only once.
4. The condition is evaluated before the loop body is executed. If the condition is false then the loop body is not executed.
5. The update part is executed only after the loop body is executed and is generally used for updating the loop variables.
6. The absence of a condition is taken as true.
7. It is the responsibility of the programmer to make sure the condition is false after certain iterations.

ABC Amber CHM Converter Trial version, http://www.processtext.com/abcchm.html

THE `for` LOOP WITH A COMMA OPERATOR

Introduction

You may want to control the loop variables in the same `for` loop. You can use one `for` loop with a comma operator in such situations.

Program/Example

```
for (i = 0, j = 10; i < 3 && j > 8; i++, j-)
printf (" the value of i and j %d %d\n",i, j);
```

Explanation

1. First `i` is initialized to 0, and `j` is initialized to 10.
2. The conditions `i<3` and `j>8` are evaluated and the result is printed only if both conditions are true.
3. After executing the loop body, `i` is incremented by 1 and `j` is decremented by 1.
4. The comma operator also returns a value. It returns the value of the rightmost operand. The value of (`i = 0, j = 10`) is 10.

ABC Amber CHM Converter Trial version, http://www.processtext.com/abcchm.html

THE `break` STATEMENT

Introduction

Just like the `switch` statement, `break` is used to break any type of loop. Breaking a loop means terminating it. A `break` terminates the loop in which the loop body is written.

Program/Example

For example,

```
i = 0;
while (1)
{
    i = i + 1;
    printf(" the value of i is %d\n");
    if (i>5) break;
}
```

Explanation

1. The `while (1)` here means the `while` condition is always true.
2. When `i` reaches 6, the `if` condition becomes true and `break` is executed, which terminates the loop.

ABC Amber CHM Converter Trial version, http://www.processtext.com/abcchm.html

THE `continue` STATEMENT

Introduction

The `break` statement breaks the entire loop, but a `continue` statement breaks the current iteration. After a `continue` statement, the control returns to top of the loop, that is, to the test conditions. `Switch` doesn't have a `continue` statement.

Program/Example

Suppose you want to print numbers 1 to 10 except 4 and 7. You can write:

```
for(i = 0, i < 11, i++)
{
   if ((i == 4) || (i == 7)) continue;
   printf(" the value of i is %d\n", i);
}
```

Explanation

1. If `i` is 1 then the `if` condition is not satisfied and `continue` is not executed. The value of `i` is printed as 1.
2. When `i` is 4 then the `if` condition is satisfied and `continue` is executed.
3. After executing the `continue` statement, the next statement, `(printf)`, is not executed; instead, the updated part of the `for` statement `(i++)` is executed.

ABC Amber CHM Converter Trial version, http://www.processtext.com/abcchm.html

Chapter 5: The printf Function

printf

Introduction

printf is used to display information on screen, that is, standard output. printf is a function that returns the number of characters printed by the printf function.

Program

```
#include <stdio.h>
main()
{
int i = 0;
i=printf("abcde");     // A
printf("total characters printed %d\n",i);  //B
}
```

Explanation

1. Here, five characters are printed by statement A. So, i will get the value 5.
2. Statement B prints the value of i as 5.
3. The general format for the printf statement has a first string argument followed by any additional arguments.
4. In statement B, "total characters printed %d\n" is the first string argument.
5. i is the second argument. You may have multiple arguments, but that depends on what value you have to print. For each additional argument you will have to include a placeholder. Each placeholder begins with %. In statement B, %d is the placeholder.
6. For the second argument i, the placeholder is %d. So when you need an integer value, you have to use %d. The placeholders are given for each data type.
7. For example, if you want to print i and j, you may have to use two placeholders. Any material in the first string argument, other than the placeholder and characters, represents the escape sequence. In this example, the escape sequence character is \n, which is not printed but acts as a directive. For example, the \n directive indicates that the next printing should be done on a new line.

Points to Remember

1. printf is used to direct output to standard output format.
2. printf is a function that returns the number of characters printed.

ABC Amber CHM Converter Trial version, http://www.processtext.com/abcchm.html

PLACEHOLDERS

Introduction

Placeholders are used to print values of arguments supplied in print. The directives in the placeholders control printing.

Program/Example

The general form of a placeholder is:

- % flags field-width precision prefix type-identifier.

Type-identifiers

The type-identifiers are as follows:

- `d, i` Signed integers
- `o` Unsigned integers displayed in octal form.
- `u` Unsigned integers in decimal form.
- `x` Unsigned integers in hexadecimal form, and the hexadecimal characters a, b, c, d, e, and f printed in lowercase.
- `X` Unsigned integer in hexadecimal form, and the hexadecimal characters A, B, C, D, E, and F printed in uppercase.
- `c` Any value converted to unsigned `char` and displayed; `c` is used mainly for printing characters.
- `s` The argument is converted to a character array and is printed; the last null in the string is not printed.
- `f` Floating point.
- `e, E` Floating point displayed in exponential form. It will have one digit to the left of the decimal point; the number of digits on the right side of the decimal point depends on the required precision.
- `g, G` The value can be printed in floating point or exponential form. The exponential form is used if the exponent is less than –1 or if the exponent causes more places than required by the specified precision; the decimal point appears only if it is followed by a digit.
- `n` This indicates to print the number of characters that are printed so far by `printf`.
- `p` It indicates an additional argument pointer to void; the value of the pointer is converted to a sequence of characters.

Type prefixes

- `h` It can appear before type indicators d, i, o, u, x, and X. It indicates that the value to be displayed should be interpreted as short; for example, short integer (hd) and short unsigned integer (hu).
- `l` It can appear before type-identifiers d, i, o, u, x, and X. It indicates that the value to be displayed should be interpreted as long; for example, long integer (hd) and long unsigned integer (hu).
- `l, L` Available for type-identifiers e, E, f, g, and G. It indicates that a value should be indicated as long double.

Field-width

1. *Field-width* indicates the least number of columns that will be allocated to the output. For example, if you write `%4d` to `i` and the value of `i` is 10, then 4 columns are allocated for `i` and 2 blank are added on left side of value of `i`. So the output is `bb10`. Here, b indicates blank.
2. If the value is more than the specified column, field-width is ignored and the number of columns used is equal to the number of columns required by the arguments. So if `i` is 12345 then 5 columns are used, even if `%4d` is specified.
3. In any circumstance, the output width is not shortened, because of field-width.
4. If you specify * instead of field-width then you have to specify additional arguments. For example,
5.
6. `printf ("%*d\n", 5, 20);  // A`
7. `printf ("%*d\n", 20, 5);  // B`

In A, 5 is substituted for * and it indicates putting the value 20 in 5 columns.

In B, 20 is substituted for * and it indicates putting the value 5 in 20 columns.

Precision

1. *Precision* indicates the minimum number of digits printed for type integers d, i, o, u, x, and X. For example,
2.
3. `i.  printf("%10.4d\n", 35)`
4. Here 10 is the field-width and 4 is the precision, so 10 columns are used for the 4-digit output. To make 35 into 4 digits, two 0s are added to the left side to make it 0035. To print 0035 in 10 columns, blanks are added to make the output bbbbbb0035.
5. For floating arguments, precision indicates how many digits are printed after decimal points. If precision is more than the number of digits on the right side of the decimal point, 0s are added to the right side.
6. If precision indicates too few digits, then it is ignored and the number of digits are printed as necessary.

Flags

1. *Flag* characters are used to give directives for the output. You can use multiple flag characters in any order.
2. The flag characters are as follows:
   - – Indicates that output is left justified.
   -
   - `printf("%-10.4d\n", 25)`
   - It causes the number to be printed as 0025bbbbbb. Thus, blanks are added to the right side.
   - In the absence of a flag, it is printed as bbbbbb0025.
   - `+` Indicates that `i` number is printed using a sign character (+ or –).
   -
   - `printf("%+d\n", -25);`
   - `printf("%+d\n", 25);`
   - It causes printing as
   -
   - `-25`
   - `+25`
   - `<space>` Indicates a space for positive values so that positive values and negative values are aligned. For example,
   -
   - `printf("% d\n", 25);`
   - `printf("% d", 25);`
   - It causes printing in the form of
   -
   - `b25`
   - `25`
   - In the first case, blank is displayed.
   - – `#` Indicates that the value should be converted to another form before displaying. For example, for hexadecimal values you can indicate 0X; for the floating data type, # indicates that the decimal point should always be included in the output.
   - `0` Used with whole and real numbers, 0 causes 0s to be padded to complete the field width. If the precision is specified as 0, then this flag is ignored; if the 0 and – flags are both specified, the 0 flag is ignored.

Escape Sequence

`Escape sequences` are the special directives used to format printing. For example, `\n` indicates that the next printing should start from the first column of the next line. Following are the escape sequences:

- `\a` Alert
- Produces a beep or flash; the cursor position is not changed.
- `\b` Backspace
- Moves the cursor to the last column of the previous line.

- `\f` Form feed
- Moves the cursor to start of next page.
- `\n` New line
- Moves the cursor to the first column of the next line.
- `\r` Carriage Return
- Moves the cursor to the first column of the current line.
- `\t` Horizontal Tab
- Moves the cursor to the next horizontal tab stop on the line.
- `\v` Vertical Tab
- Moves the cursor to the next vertical tab stop on the line.
- \\
- Prints `\\`.
- `\"`
- Prints "
- %%
- Prints %.

Points to Remember

1. `printf` returns the number of characters printed; if some error occurs then it returns a negative value.
2. Formating of `printf` can be controlled by using flags, field-width, etc.

Previous Next

ABC Amber CHM Converter Trial version, http://www.processtext.com/abcchm.html

Chapter 6: Address and Pointers

ADDRESS

Introduction

For every variable declared in a program there is some memory allocation. Memory is specified in arrays of bytes, the size of which depending on the type of variable. For the integer type, 2 bytes are allocated, for floats, 4 bytes are allocated, etc. For every variable there are two attributes: *address* and *value*, described as follows:

Program

```
#include <stdio.h>
main ()
{
    int i, j, k;       //A
            i = 10;            //B
    j = 20;            //C
    k = i + j; //D

    printf ("Value of k is %d\n", k);
}
```

Explanation

1. Memory allocations to the variables can be explained using the following variables:
2.
3. `100,i  10`
4. `200, j  20`
5. `300,k  30`

   When you declare variables `i`, `j`, `k`, memory is allocated for storing the values of the variables. For example, 2 bytes are allocated for `i`, at location 100, 2 bytes are allocated for `j` at location 200, and 2 bytes allocated for `k` at location 300. Here 100 is called the address of `i`, 200 is called address of `j`, and 300 is called the address of `k`.
6. When you execute the statement `i = 10`, the value 10 is written at location 100, which is specified in the figure. Now, the address of `i` is 100 and the value is 10. During the lifetime of variables, the address will remain fixed and the value may be changed. Similarly, value 20 is written at address 200 for `j`.
7. During execution, addresses of the variables are taken according to the type of variable, that is, local or global. Local variables usually have allocation in stack while global variables are stored in runtime storage.

Points to Remember

1. Each variable has two attributes: address and value.
2. The address is the location in memory where the value of the variable is stored.
3. During the lifetime of the variable, the address is not changed but the value may change.

ABC Amber CHM Converter Trial version, http://www.processtext.com/abcchm.html

POINTERS

Introduction

A *pointer* is a variable whose value is also an address. As described earlier, each variable has two attributes: address and value. A variable can take any value specified by its data type. For example, if the variable `i` is of the integer type, it can take any value permitted in the range specified by the integer data type. A pointer to an integer is a variable that can store the address of that integer.

Program

```
#include <stdio.h>
main ()
{
   int i;          //A
   int * ia;       //B
   i = 10;         //C
   ia = &i;    //D

    printf (" The address of i is %8u \n", ia);          //E
    printf (" The value at that location is %d\n", i);   //F
    printf (" The value at that location is %d\n", *ia); //G
  *ia = 50;                                   //H
    printf ("The value of i is %d\n", i);                //I
}
```

Explanation

1. The program declares two variables, so memory is allocated for two variables. `i` is of the type of `int`, and `ia` can store the address of an integer, so it is a pointer to an integer.
2. The memory allocation is as follows:

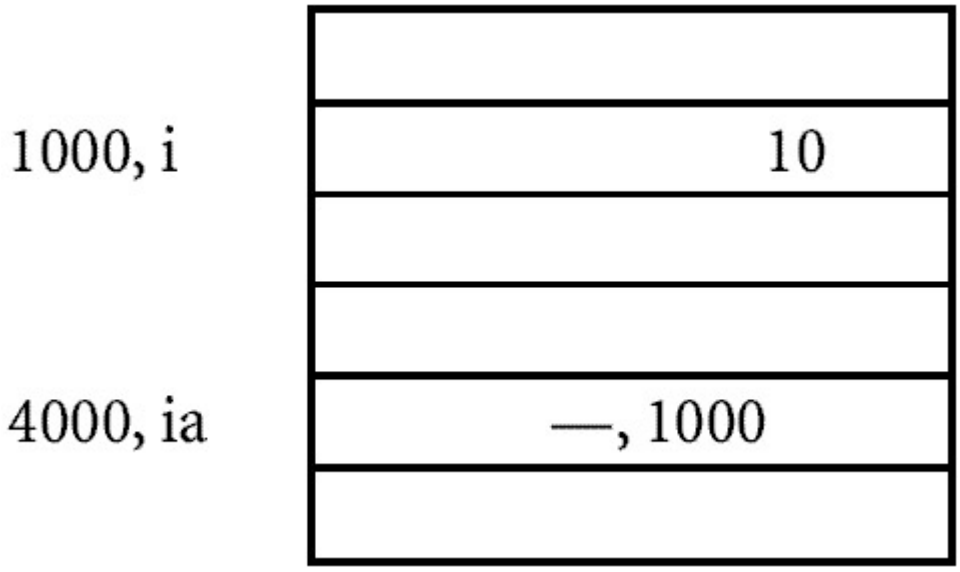

3. `i` gets the address 1000, and `ia` gets address 4000.
4. When you execute `i = 10`, 10 is written at location 1000.
5. When you execute `ia = &i` then the address and value are assigned to `i`, thus `i` has the address of 4000 and value is 1000.

6. You can print the value of `i` by using the format `%au` because addresses are usually in the format unsigned long, as given in statement E.
7. Statement F prints the value of `i`, (at the location 1000).
8. Alternatively, you can print the value at location 1000 using statement G. `*ia` means you are printing the value at the location specified by `ia`. Since `i` has the value for 1000, it will print the value at location 1000.
9. When you execute `*ia = 50`, which is specified by statement H, the value 50 is written at the location by `ia`. Since `ia` specifies the location 1000, the value at the location 1000 is written as 50.
10. Since `i` also has the location 1000, the value of `i` gets changed automatically from 10 to 50, which is confirmed from the `printf` statement written at position `i`.

Points to Remember

1. Pointers give a facility to access the value of a variable indirectly.
2. You can define a pointer by including a* before the name of the variable.
3. You can get the address where a variable is stored by using `&`.

Previous Next

ABC Amber CHM Converter Trial version, http://www.processtext.com/abcchm.html

Chapter 7: The scanf Function

scanf

Introduction

The scanf function is used to read information from a standard input device (keyboard). scanf starts with a string argument and may contain additional arguments. Any additional arguments must be pointers (to implement calls by reference).

Program

```
#include <stdio.h>
main()
{
    int i = 0;
    int k,j=10;
    i=scanf("%d%d%d",&j,&k,&i);
    printf("total values inputted %d\n",i);
    printf("The input values %d %d\n",j,k);
}
```

Explanation

1. Statement A indicates scanf; it is used for inputting values for i, j, k.
2. You have to use the address of the variable as an additional variable, for example, &i.
3. The first argument is always a string argument with placeholders.
4. During execution of scanf, the input is processed and it is matched against the string argument. The process is continued until the matching is complete.
5. When the first placeholder is encountered in the string argument, a value of the specific type of the first element constitutes a match. It is repeated for each placeholder.
6. If there are one or more whitespace characters in the first string argument between the placeholders, any sequence of one or more whitespace characters in the input completes a match.
7. If there are other characters in a string argument, the input should have the same character in the same sequence in order to constitute a match.
8. Once a match is not found, the function is terminated. Matching fails if the expected input is missing.
9. scanf returns the number of values that have been succesfully input. In this example, if you type A instead of an integer when you are giving the value for k, then scanf returns only 1, although k gets the value 65 (the ASCII value for A).

Points to Remember

1. Input can be done using scanf.
2. For scanf, the address of the variable should be passed.
3. scanf returns the number of successful inputs.

ABC Amber CHM Converter Trial version, http://www.processtext.com/abcchm.html

THE scanf PLACEHOLDERS

Introduction

The scanf placeholder consists of % at the beginning and a type indicator at the end. Apart from that it can have *, a maximum field-width indicator, and a type indicator modifier, for example,

```
%10.2f,%10d
```

Program/Example

Type indicators

- d, i Used for signed integers; the expected argument should be a pointer to int.
- o Used for unsigned int expected's value. It should be an integer in octal form.
- U Unsigned integer in decimal form.
- X, X Unsigned integer in hexadecimal form.
- E, E, f, g, G Floating-point values.
- S Character string. It matches a sequence of non-whitespace characters terminated by an end-of-line or end-of-file character. The additional argument should be a pointer to char and should point to an area that is large enough to hold the input string as well as the NULL terminator.
- C Matches the number of characters according to a specified field-width. If no width is specified then a single character is assumed. The additional argument must be a pointer to char; the area pointed to should be large enough to hold the specified number of characters.
- N Does not read any input but writes the number of characters so far in the target variable.

Use of *

The * is used to suppress input. For example, with %*d, if your input consists of 5 values and you want to ignore the middle 3 values, you can write:

```
scanf(" %d %*d %*d%*d %d ", &i, &j)
```

So, if your input is

10 20 30 40 50

it will get the value 10 and j will get the value 50. This is useful when you are getting the input from a file.

Field-width

It indicates the maximum number of characters that are read into the variables.

Explanation

1. scanf requires two inputs: the first is a string argument and the second is a set of additional arguments.
2. You can define how the input is to be taken by using placeholders.

ABC Amber CHM Converter Trial version, http://www.processtext.com/abcchm.html

Chapter 8: Preprocessing

PREPROCESSOR

Introduction

C's preprocessor provides a facility for defining constant and substitution, which are commonly called macros. It is used when you either want the make to program more readable or when you don't have enough information about certain values. For example, if your input is in U.S. dollars, and your processing is done in terms of rupees, then your program may have the expression

```
Rs = usd * 46;
```

where 46 is the currency rate. You can write the expression as:

```
# define currency_rate 46
rs = usd * currency_rate;
```

So, if the currency rate is changed, you can make the necessary change only in one place. The preprocessor directive is defined here.

Program

```
# include <stdio.h>

#define VAL 35        // A
#define HELLO "HELLO";      // B

main ()
{
    int res;

    res = VAL-5;            // C
    printf ("res = VAL-5: res == %d\n", res);
    printf ( HELLO);        //D
}
```

Statements A and B indicate preprocessor directives. `VAL` is defined as integer 35 and `HELLO` is a string as `"HELLO"`. Whenever `VAL` and `HELLO` appear, they are replaced by the specified values.

In statement C, `VAL 35` is replaced by `VAL –5`. So the statement becomes

```
res = 35-5;
```

Statement D, after replacement, becomes

```
printf ("HELLO")
```

The preprocessor directives are not C statements, so they do not end with semicolons.

The `include` directive tells the compiler to include all the contents of a specified file in the source file before giving the source file for compiling.

Explanation

1. The preprocessor substitutes strings that are specified by using `define` directive
2.
3. `#define constant identifer "value"`
4. Following are valid `define` expressions:
5.
6. `#define TRUE 1`
7. `#define FALSE 0`
8. `#define BS '\b'`
9. `#define TAB '\011'`

Previous Next

ABC Amber CHM Converter Trial version, http://www.processtext.com/abcchm.html

undef

Introduction

If you want to nullify the effect of the `define` directive and specify a new value, then you can use the `undef` directive.

Program

```
#include <stdio.h>
#define VAL 40;       //A
#undef VAL            //B
#define VAL 40        //C
main()
{
    printf ("%d\n", VAL);    //D
}
```

Explanation

1. Statement A defines `VAL` as 40, that is, an erroneous definition.
2. Statement B indicates that the afore mentioned definition no longer exists.
3. Statement C allows a new definition.
4. Statement D uses new definition of 40.

Point to Remember

The `undef` directive nullifies the effect of an earlier definition.

ABC Amber CHM Converter Trial version, http://www.processtext.com/abcchm.html

ifdef

Introduction

The `ifdef` directive makes substitutions based on whether a particular identifier is defined.

Program

Suppose we have three files:

```
file1.h
#define USD 1
file2.h
#define UKP 1
file3
#include <stdio.h>
#include <file1.h>       //A
#ifdef USD                  // B
       #define currency_rate 46     //C
#endif                //D

#ifdef UKP                  // E
   #define currency_rate 100 //F
#endif                //G
main()
{
    int rs;
    rs = 10 * currency_rate;  //H
    printf ("%d\n", rs);
}
```

Explanation

1. Statement A includes `file1.h`, so the content of the file is substituted in that position. If the file name is given in angle brackets, it means the file is searched in the default search path. If the file name is specified within “”, like `include "file1.h"`, then `file1.h` is searched only in the current directory.
2. Statement B is an `ifdef` directive and it checks whether the identifier `USD` is defined. Since it is defined in `file1.h`, the condition is true and the currency rate is defined as 46. You can include multiple directives in `if`, `def` and `endif`.
3. Statement E checks whether the identifier `UKP` is defined. Since it is not defined, because `file2.h`, is not included in the file, the condition is false and its defined directive is not processed.
4. The currency rate in `file3` is taken as 46.
5. In the expression in statement H, the currency rate is substituted as 46.
6. If, instead of `file1.h`, you include `file2.h`, then the currency rate will be 100.

Points to Remember

1. `ifdef` is used to make a substitution depending on whether a certain identifier is defined.
2. If the identifier is defined, it returns true; otherwise, it is false.

ABC Amber CHM Converter Trial version, http://www.processtext.com/abcchm.html

ABC Amber CHM Converter Trial version, http://www.processtext.com/abcchm.html

ifndef

Introduction

`#ifndef` is used to check whether a particular symbol is defined.

Program

Suppose wse have three files:

```
file1.h
#define USD 1

file2.h
#define UKP 1

file3
#include <stdio.h>
#include <file1.h>      //A

#ifndef USD                    // B
       #define currency_rate 100     //C
#endif                 //D

#ifndef UKP                   // E
   #define currency_rate 46 //F
#endif                 //G
main()
{
    int rs;
    rs = 10 * currency_rate;  //H
    printf ("%d\n", rs);
}
```

Explanation

1. `ifndef` is a complement of `ifdef`. That is, if the symbol is defined, `ifndef` returns false.
2. Statement B is an `ifndef` directive and it checks whether the identifier `USD` is defined. Since it is defined in `file1.h`, the condition is false and further processing is not done.
3. Statement E checks whether the identifier `UKP` is defined. Since it is not defined, because `file2.h` is not included in the file, the condition is true and the currency rate is defined as 46.
4. The currency rate in `file3` is taken as 46.
5. In the expression in statement H, the currency rate is substituted as 46.
6. If, instead of `file1`, you include `file2.h`, then the currency rate will be 100.
7. `ifndef` is a complement of `ifdef`. So, when `ifdef` returns true, `ifndef` returns false.

ABC Amber CHM Converter Trial version, http://www.processtext.com/abcchm.html

#if

Introduction

`#if` allows you to define more generalized conditions. Multiple conditions, which are connected by relational operators such as `AND(&&)`, `OR(||)`, are allowed.

Program

Suppose we have three files:

```
file1.h
#define USD 1

file2.h
#define UKP 1

file3
#include <stdio.h>
#include <file1.h>                //A

#if ((1>0) &&(defined (USD))      // B
       #define currency_rate 46                     //C
#endif                        //D

#if (defined (UKP))                      // E
   #define currency_rate 100 //F
#endif                        //G
main()
{
    int rs;
    rs = 10 * currency_rate; //H
    printf ("%d\n", rs);
}
```

Explanation

1. Statement B indicates the `if` directive.
2. The generalized form of the `if` directive is
3.
4. `#if <condition>`
5. `#endif`
6. The condition (1>0) is absolutely not necessary here. It is given just to indicate how you can concatanate multiple conditions.
7. The condition defined (USD) is true only if the identifier USD is defined.
8. Since `file1.h` is included and USD gets defined, the condition is evaluated as true and the currency rate is defined as 46.
9. In statement E, the condition is false because UKP is not defined.
10. In the statement H, the currency rate is 46.

ABC Amber CHM Converter Trial version, http://www.processtext.com/abcchm.html

Points to Remember

1. The `if` directive allows us to use a condition more generalized than `ifdef`.
2. The `defined()` predicate returns true if the symbol is defined; otherwise, it is false.

Previous Next

ABC Amber CHM Converter Trial version, http://www.processtext.com/abcchm.html

ifelse

Introduction

The `ifelse` directive lets us specify the action if the condition is not true.

Program

Suppose we have three files:

```
file1.h
#define USD 1
file2.h
#define UKP 1

file3
#include <stdio.h>
#include <file1.h>              //A

#if (defined (USD))            // B
         #define currency_rate 46
#else
        #define currency_rate 100             //C
#endif                          //D

main()
{
    int rs;
    rs = 10 * currency_rate;    //H
    printf ("%d\n", rs);
}
```

Explanation

1. Statement B indicates the `ifelse` directive.
2. If the identifier `USD` is defined, the currency rate is taken as 46; otherwise, the currency rate is taken as 100.
3. Since `USD` is defined in `file1.h`, the currency rate is taken as 46.

Point to Remember

The `ifelse` directive allows us to take action if the condition is not satisfied.

ABC Amber CHM Converter Trial version, http://www.processtext.com/abcchm.html

ifelif

Introduction

`ifelif` allows us to take one action if there are multiple decision points. For example, if you want to take the currency rate of 1 if USD and UKP are not defined, you can write the following program.

Program

Suppose we have three files:

```
file1.h
#define USD 1

file2.h
#define UKP 1

file3
#include <stdio.h>
#include <file1.h>              //A

#if (defined (USD))                   // B
     #define currency_rate 46
#elif (defined (UKP))
     #define currency_rate 100        //C
#else
     # define currency_rate 1         //D
#endif

main()
{
    int rs;
    rs = 10 * currency_rate;          //H
    printf ("%d\n", rs);
}
```

Explanation

1. Statement B includes the `ifelif` directive. It is similar to the `else` directive.
2. `#elif` appears only after `#if`, `#ifdef`, `#ifndef`, and `#elif`.
3. `#elif` is similar to `#else` but it is followed by a condition.
4. You can have as many `#elif` directives as you want.
5. If USD is defined, then the currency rate is 46; otherwise, if UKP is defined, then the currency rate is 100; otherwise, the currency rate is 1.
6. In this case, if you remove the statement `include file1.h` at position A, then USD and UKP are not defined and currency rate is taken as 1.

Points to Remember

1. `#elif` is similar to `#else` but it is followed by a condition.

2. `#elif` allows taking action in the case of multiple decision points.

Previous Next

ABC Amber CHM Converter Trial version, http://www.processtext.com/abcchm.html

ERROR DIRECTIVE

Introduction

The *error directive* is used to specify an error message for a specific situation. In the following program, the error message is displayed if `USD` and `UKP` are not defined.

Program

Suppose we have three files:

```
file1.h
#define USD 1

file2.h
#define UKP 1

file3
#include <stdio.h>
#include <file1.h>                  //A

#if !defined (USD) || !defined (UKP)      // B
#error "ERROR: NO_CURRENCY rate is specified." //C
#endif

main()
{
    int rs;
    rs = 10 * currency_rate;         //D
    printf ("%d\n", rs);
}
```

Explanation

1. Statement B checks whether `UKP` or `USD` is defined.
2. If both are not defined then the preprocessor displays an error.

Points to Remember

1. The `#error` directive allows us to specify an error message.
2. The error message is generated by the preprocessor.

ABC Amber CHM Converter Trial version, http://www.processtext.com/abcchm.html

#line

Introduction

The `#line` directive allows you to define arbitrary line numbers for the source lines. Normally, the compiler counts lines starting at line number 1; using the `#line` directive, you can specify an arbitrary line number at any point. The compiler then uses that line number for subsequent counts.

Program

```
#include <stdio.h>
main()
{
    printf("A\n");          //A

     #line100               //H
    printf("B\n");          //B
    printf("C FILE %s LINE %d\n", __FILE__, __LINE__ );//C
     #line200               //K

    printf("D\n");          //D
    printf("E\n");          //E
}
```

Explanation

1. The statement H indicates the `#line` directive.
2. The `#line` number in statement B is taken as 100 and for statement `C`, it is taken as 101.
3. The `#line` number in statement D is taken as 200 and for statement E, it is taken as 201.
4. If you introduce any error in statement B then the compiler will display the error at `#line` number 100.
5. C has provided two special identifiers: __FILE__ and __LINE__, which indicate the file name of the source file and the current line number, respectively.

Point to Remember

`#line` is used to indicate line numbers which can be used for debugging.

ABC Amber CHM Converter Trial version, http://www.processtext.com/abcchm.html

MACRO

Introduction

Macros allow replacement of the identifier by using a statement or expression. The replacement text is called the macro body. C uses macros extensively in its standard header files, such as in `getchar()`, `getc()`.

Program

```
#define CUBE(x)  x*x*x      //A
#include <stdio.h>
main ()
{
    int k = 5;
    int j = 0;
    j = CUBE(k);            //B  j = k*k*k

    printf ("value of j is %d\n", j);      //C
}
```

Explanation

1. You can define the macro CUBE as in statement A.
2. The macro can be defined by using parameters, but that is not mandatory.
3. The parameter name that is used in a macro definition is called the *formal* parameter. In this example, it is `x`.
4. `x*x*x` is called the macro body.
5. There should not be any spaces between the macro name and the left parenthesis.
6. CUBE(k) in statement B indicates a macro call.
7. An argument such as `k`, which is used for calling a macro, is called an *actual* parameter.
8. While expanding the macro, the actual parameter is substituted in the formal parameter and the macro is expanded. So you will get the expansion as `j = k*k*k`.
9. The value of `j` is calculated as 125.
10. Since macro expansion is mainly a replacement, you can use any data type for the actual parameter. So, the above macro works well for the float data type.

Points to Remember

1. A macro is used when you want to replace a symbol with an expression or a statement.
2. You can define macros by using parameters.

ABC Amber CHM Converter Trial version, http://www.processtext.com/abcchm.html

MACRO AND FUNCTION

Introduction

While writing the macro, you have to write the macro body carefully because the macro just indicates replacement, not the function call.

Program

```
#include <stdio.h>
#define add(x1, y1)  x1+y1   //E
#define mult(x1,y2) x2*y2   //F
main ()
{
    int a,b,c,d,e;
    a = 2;
    b = 3;
    c = 4;
    d = 5;
    e = mult(add(a, b), add(c, d)); //A

    // mult(a+b, c+d)               //B
    // a+b * c+d                    //C

    printf ("The value of e is %d\n", e);
}
```

Explanation

1. Statement E indicates a macro for adding two numbers.
2. Statement F indicates a macro for multiplying two numbers.
3. Statement A indicates a macro that is supposed to add two numbers and then multiply two numbers. In this case, it is supposed to perform the calculation (2+3) * (4+5).
4. The actual expansion of macro `adds` is given in statement B.
5. The final expansion of `mult` gives the expansion `a+b * c+d`, which is erroneous.
6. The final value of `e` is 17, which is not correct.
7. To get the correct value, use the following definition:
8.
9. `#define add(x1, y1) (x1+y1)`
10. `#define mult(x2, y2) (x2*y2)`

Point to Remember

While using the macro, you have to write the expression correctly. You can use parentheses to give the correct meaning to the expression.

ABC Amber CHM Converter Trial version, http://www.processtext.com/abcchm.html

Chapter 9: Arrays

ARRAYS

Introduction

An *array* is a data structure used to process multiple elements with the same data type when a number of such elements are known. You would use an array when, for example, you want to find out the average grades of a class based on the grades of 50 students in the class. Here you cannot define 50 variables and add their grades. This is not practical. Using an array, you can store grades of 50 students in one entity, say grades, and you can access each entity by using subscript as grades[1], grades[2]. Thus you have to define the array of grades of the float data type and a size of 50. An array is a composite data structure; that means it had to be constructed from basic data types such as array integers.

Program

```
#include <stdio.h>
main()
{
    int a[5];  \\A
    for(int i = 0;i<5;i++)
    {
       a[i]=i;\\B
    }
    printarr(a);
}
void printarr(int a[])
{
    for(int i = 0;i<5;i++)
    {
        printf("value in array %d\n",a[i]);
    }
}
```

Explanation

1. Statement A defines an array of integers. The array is of the size 5—that means you can store 5 integers.
2. Array elements are referred to using subscript; the lowest subscript is always 0 and the highest subscript is (size –1). If you refer to an array element by using an out-of-range subscript, you will get an error. You can refer to any element as `a[0]`, `a[1]`, `a[2]`, etc.
3. Generally, you can use a `for` loop for processing an array. For the array, consecutive memory locations are allocated and the size of each element is same.
4. The array name, for example, `a`, is a pointer constant, and you can pass the array name to the function and manipulate array elements in the function. An array is always processed element by element.
5. When defining the array, the size should be known.

   Note The array subscript has the highest precedence among all operators thus a[1] * a[2] gives the multiplication of array elements at position 1 and position 2.

Points to Remember

ABC Amber CHM Converter Trial version, http://www.processtext.com/abcchm.html

1. An array is a composite data structure in which you can store multiple values. Array elements are accessed using subscript.
2. The subscript operator has the highest precedence. Thus if you write `a[2]++`,it increments the value at location 2 in the array.
3. The valid range of subscript is 0 to size –1.

Previous Next

ABC Amber CHM Converter Trial version, http://www.processtext.com/abcchm.html

ADDRESS OF EACH ELEMENT IN AN ARRAY

Introduction

Each element of the array has a memory address. The following program prints an array limit value and an array element address.

Program

```
#include <stdio.h>
void printarr(int a[]);
main()
{
    int a[5];
    for(int i = 0;i<5;i++)
    {
        a[i]=i;
    }
    printarr(a);
}
void printarr(int a[])
{
    for(int i = 0;i<5;i++)
    {
        printf("value in array %d\n",a[i]);
    }
}
void printdetail(int a[])
{
    for(int i = 0;i<5;i++)
    {
        printf("value in array %d and address is %16lu\n",a[i],&a[i]);
\\ A
    }
}
```

Explanation

1. The function `printarr` prints the value of each element in `arr`.
2. The function `printdetail` prints the value and address of each element as given in statement A. Since each element is of the integer type, the difference between addresses is 2.
3. Each array element occupies consecutive memory locations.
4. You can print addresses using place holders `%16lu` or `%p`.

Point to Remember

For array elements, consecutive memory locations are allocated.

ABC Amber CHM Converter Trial version, http://www.processtext.com/abcchm.html

ABC Amber CHM Converter Trial version, http://www.processtext.com/abcchm.html

ACCESSING AN ARRAY USING POINTERS

Introduction

You can access an array element by using a pointer. For example, if an array stores integers, then you can use a pointer to integer to access array elements.

Program

```
#include <stdio.h>
void printarr(int a[]);
void printdetail(int a[]);
main()
{
    int a[5];
    for(int i = 0;i<5;i++)
    {
        a[i]=i;
    }
    printdetail(a);
}
void printarr(int a[])
{
    for(int i = 0;i<5;i++)
    {
        printf("value in array %d\n",a[i]);
    }
}
void printdetail(int a[])
{
    for(int i = 0;i<5;i++)
    {
        printf("value in array %d and address is %8u\n",a[i],&a[i]);
    }
}
void print_usingptr(int a[]) \\ A
{
    int *b;     \\ B
    b=a;                \\ C
    for(int i = 0;i<5;i++)
    {
        printf("value in array %d and address is %16lu\n",*b,b); \\ D
        b=b+2; \\E
    }
```

```
}
```

Explanation

1. The function `print_using` pointer given at statement A accesses elements of the array using pointers.
2. Statement B defines variable b as a pointer to an integer.
3. Statement C assigns the base address of the array to b, thus the array's first location (a[0]) is at 100; then b will get the value 100. Other elements of the array will add 102,104, etc.
4. Statement D prints two values: `*b` means the value at the location specified by `b`, that is, the value at the location 100. The second value is the address itself, that is, the value of `b` or the address of the first location.
5. For each iteration, `b` is incremented by 2 so it will point to the next array location. It is incremented by 2 because each integer occupies 2 bytes. If the array is long then you may increment it by 4.

Points to Remember

1. Array elements can be accessed using pointers.
2. The array name is the pointer constant which can be assigned to any pointer variable.

Previous Next

ABC Amber CHM Converter Trial version, http://www.processtext.com/abcchm.html

MANIPULATING ARRAYS USING POINTERS

Introduction

When the pointer is incremented by an increment operator, it is always right incremented. That is, if the pointer points to an integer, the pointer is incremented by 2, and, if it is long, it is incremented by 4.

Program

```
#include <stdio.h>
void printarr(int a[]);
void printdetail(int a[]);
void print_usingptr(int a[]);
main()
{
    int a[5];
    for(int i = 0;i<5;i++)
    {
        a[i]=i;
    }
    print_usingptr(a);
}
void printarr(int a[])
{
    for(int i = 0;i<5;i++)
    {
        printf("value in array %d\n",a[i]);
    }
}
void printdetail(int a[])
{
    for(int i = 0;i<5;i++)
    {
        printf("value in array %d and address is %8u\n",a[i],&a[i]);
    }
}
void print_usingptr(int a[])
{
    int *b;
    b=a;
    for(int i = 0;i<5;i++)
    {
        printf("value in array %d and address is %16lu\n",*b,b);
```

```
        b++;                    // A
    }
}
```

Explanation

1. This function is similar to the preceding function except for the difference at statement A. In the previous version, `b = b+2` is used. Here `b++` is used to increment the pointer.
2. Since the pointer is a pointer to an integer, it is always incremented by 2.

Point to Remember

The increment operator increments the pointer according to the size of the data type.

Previous Next

ABC Amber CHM Converter Trial version, http://www.processtext.com/abcchm.html

ANOTHER CASE OF MANIPULATING AN ARRAY USING POINTERS

Introduction

You can put values in the memory locations by using pointers, but you cannot assign the memory location to an array to access those values because an array is a pointer constant.

Program

```
#include <stdio.h>
void printarr(int a[]);
void printdetail(int a[]);
void print_usingptr_a(int a[]);
main()
{
    int a[5];
    int *b;
    int *c;
    for(int i = 0;i<5;i++)
    {
        a[i]=i;
    }
    printarr(a);
    *b=2;            \\ A
    b++;             \\ B
    *b=4;            \\ C
    b++;
    *b=6;            \\ D
    b++;
    *b=8;            \\ E
    b++;
    *b=10;
    b++;
    *b=12;
    b++;
    a=c; //error     \\F
    printarr(a);


}
void printarr(int a[])
{
    for(int i = 0;i<5;i++)
    {
```

```
        printf("value in array %d\n",a[i]);
    }
}
void printdetail(int a[])
{
    for(int i = 0;i<5;i++)
    {
        printf("value in array %d and address is %16lu\n",a[i],&a[i]);
    }
}

void print_usingptr_a(int a[])
{

    for(int i = 0;i<5;i++)
    {
        printf("value in array %d and address is %16lu\n",*a,a); \\ F
        a++; // increase by 2 bytes         \\ G
    }
}
```

Explanation

1. You can assign a value at the location specified by `b` using statement A.
2. Using statement B, you can point to the next location so that you can specify a value at that location using statement C. Using this procedure, you can initialize 5 locations.
3. You cannot assign the starting memory location as given by statement F to access those elements because `a` is a pointer constant and you cannot change its value.
4. The function `print_usingptr_a` works correctly even though you are writing `a++`. This is because when you pass `a` as a pointer in an actual parameter, only the value of `a` is passed and this value is copied to the local variable. So changing the value in the local variable will not have any effect on the outside function.

Point to Remember

The array limit is a pointer constant and you cannot change its value in the program.

Previous Next

ABC Amber CHM Converter Trial version, http://www.processtext.com/abcchm.html

TWO-DIMENSIONAL ARRAY

Introduction

You can define two- or multi-dimensional arrays. It is taken as an array of an array. Logically, the two-dimensional array 3 X 2 is taken as

```
3     1
5     2
8     7
```

Here there are three arrays, i.e. one array in each row. The values are stored as

```
3   1  5   2    8  7
```

This style is called *row measure form*. Each row array is represented as `a[0]`, which consists of elements 3 and 1. `a[1]` consists of 5 2 and `a[2]` consists of 8 7. Each element of `a[0]` is accessed as a `[0] [0]` and `a[0] [1]`, thus the value of `a[0][0]` and `a[0][1]` is 1.

Program

```
#include <stdio.h>
void printarr(int a[][]);
void printdetail(int a[][]);
void print_usingptr(int a[][]);
main()
{
    int a[3][2];      \\ A
    for(int i = 0;i<3;i++)
        for(int j=0;j<2 ;j++)
        {
                {
                      a[i]=i;
                }
        }
    printdetail(a);
}
void printarr(int a[][])
{
    for(int i = 0;i<3;i++)
        for(int j=0;j<2;j++)
        {
                {
                       printf("value in array %d\n",a[i][j]);
                }
```

ABC Amber CHM Converter Trial version, http://www.processtext.com/abcchm.html

```
        }
}
void printdetail(int a[][])
{
    for(int i = 0;i<3;i++)
        for(int j=0;j<2;j++)
        {
                {
                        printf(
                        "value in array %d and address is %8u\n",
                        a[i][j],&a[i][j]);
                }
        }
}
void print_usingptr(int a[][])
{
    int *b;    \\ B
    b=a;                \\ C
    for(int i = 0;i<6;i++)    \\ D
    {
        printf("value in array %d and address is %16lu\n",*b,b);
        b++; // increase by 2 bytes \\ E
    }
}
```

Explanation

1. Statement A declares a two-dimensional array of the size 3 × 2.
2. The size of the array is 3 × 2, or 6.
3. Each array element is accessed using two subscripts.
4. You can use two `for` loops to access the array. Since `i` is used for accessing a row, the outer loop prints elements row-wise, that is, for each value of `i`, all the column values are printed.
5. You can access the element of the array by using a pointer.
6. Statement B assigns the base address of the array to the pointer.
7. The `for` loop at statement C increments the pointer and prints the value that is pointed to by the pointer. The number of iterations done by the `for` loop, 6, is equal to the array.
8. Using the output, you can verify that C is using row measure form for storing a two-dimensional array.

Points to Remember

1. You can define a multi-dimensional array in C.
2. You have to provide multiple subscripts for accessing array elements.
3. You can access array elements by using a pointer.

Previous Next

ABC Amber CHM Converter Trial version, http://www.processtext.com/abcchm.html

THREE-DIMENSIONAL ARRAY

Introduction

Just as with a two-dimensional array, you can define three-dimensional arrays and processing in a similar way. Each three-dimensional array is taken as an array of two-dimensional arrays.

Program

```
#include <stdio.h>
main()
{
    int a[2][3][4];    \\ A
    int b[3][4];       \\ B
    int c[4];          \\ C
    int cnt=0;
    for(int i=0;i<2;i++)
        for(int j=0;j<3;j++)
               for(int k=0;k<4;k++)
               {
                      a[i][j][k] = cnt;
                      cnt;
               }
}
void print_onedim(int a[])    \\ D
{
    for(int i=0;i<4;i++)
        printf("%d ",a[i]);
}
void print_twodim(int a[][4])            \\ E
{
    for(int j=0;j<3;j++)
        print_onedim(a[j]);
    printf("\n");
}
void print_threedim(int a[][3][4])       \\ F
{
    printf("Each two dimension matrix\n");
    for(int j=0;j<2;j++)
        print_twodim(a[j]);;
}
```

Explanation

1. The three-dimensional array consists of two arrays of the size 3 × 4. Each is referred to as `a[0]`

`a[1]`. Thus `a[0]` consists of 12 elements and `a[1]` also consists of 12 elements.

2. Each two-dimensional array is taken as three arrays of the size 4.
3. The function `print_onedim` prints a single-dimensional array.
4. The function `print_twodim` prints a two-dimensional array and it calls the function for printing a single-dimensional value.
5. The function `print_threedim` prints a three-dimensional array and calls the function for printing a three-dimensional value.
6. Dimension two, which is closer to the array name, is called the outermost dimension, and dimension four, which is far from the array name declaration, is called the innermost dimension.
7. When you pass an array to the function, you have to specify the inner dimension. For example, to print `two_dim` you have to specify the inner dimension, i.e. 4, and for `printthree_dim` you have to pass 3 and 4 as inner dimensions.
8. When you pass a single-dimension array, you need not pass a dimension because the function knows what the best address of the array is.
9. In a case of a two-dimensional array, we have to pass the inner dimension because only then does the function know the base address of each array. For example, if the declaration is
10.
11. `int a[3][4]`

it is considered as three arrays of the size 4. So the base address of `a[0]` is `a` itself. The base address of `a[1]` is `a+8` because the first row has 4 elements of size 2 bytes each; thus we can get the base address of `a[1]`. Similarly, the base address of `a[2]` is `a+16`. Thus, to calculate the base address, you should know the inner dimension, 4.

Points to Remember

1. You can declare a multi-dimensional array and access it in a similar way to accessing a two-dimensional array.
2. While passing an array to the function, you have to specify the inner dimension to facilitate calculations of the base addresses.

Previous Next

ABC Amber CHM Converter Trial version, http://www.processtext.com/abcchm.html

POINTER ARRAYS

Introduction

You can define a *pointer array* similarly to an array of integers. In the pointer array, the array elements store the pointer that points to integer values.

Program

```
#include <stdio.h>
void printarr(int *a[]);
void printarr_usingptr(int *a[]);
int *a[5];      \\ A
main()
{

    int i1=4,i2=3,i3=2,i4=1,i5=0;        \\ B
    a[0]=&i1;                        \\ C
    a[1]=&i2;
    a[2]=&i3;
    a[3]=&i4;
    a[4]=&i5;

    printarr(a);
    printarr_usingptr(a);
}
void printarr(int *a[])                  \\ D
{
    printf("Address        Address in array         Value\n");
    for(int  j=0;j<5;j++)
    {
        printf("%16u           %16u                 %d\n",
        a[j],a[j],a[j]);           \\E
    }
}
void printarr_usingptr(int *a[])
{
    int j=0;
    printf("using pointer\n");
    for( j=0;j<5;j++)
    {
        printf("value of elements   %d %16lu %16lu\n",**a,*a,a); \\ F
        a++;
```

```
    }
}
```

Explanation

1. Statement A declares an array of pointers so each element stores the address.
2. Statement B declares integer variables and assigns values to these variables.
3. Statement C assigns the address of `i1` to element `a[0]` of the array. All the array elements are given values in a similar way.
4. The function `print_arr` prints the address of each array element and the value of each array element (the pointers and values that are pointed to by these pointers by using the notations `&a[i]`, `a[i]` and `*a[i])`.
5. You can use the function `printarr_usingptr` to access array elements by using an integer pointer, thus `a` is the address of the array element, `*a` is the value of the array element, and `**a` is the value pointed to by this array element.

Point to Remember

You can store pointers in arrays. You can access values specified by these values by using the * notations.

Previous Next

ABC Amber CHM Converter Trial version, http://www.processtext.com/abcchm.html

Chapter 10: Function

FUNCTION

Introduction

Functions are used to provide modularity to the software. By using functions, you can divide complex tasks into small manageable tasks. The use of functions can also help avoid duplication of work. For example, if you have written the function for calculating the square root, you can use that function in multiple programs.

Program

```
#include <stdio.h>
int add (int x, int y)       //A
{
    int z;            //B
    z = x + y;
    return (z);       //C
}
main ()
{
    int i, j, k;
    i = 10;
    j = 20;
    k = add(i, j);         //D
    printf ("The value of k is%d\n", k);    //E
}
```

Explanation

1. This function adds two integers and returns their sum.
2. When defining the name of the function, its return data type and parameters must also be defined. For example, when you write
3.
4. `int add (int x, int y)`

   `int` is the type of data to be returned, `add` is the name of the function, and `x` and `y` are the parameters of the type `int`. These are called *formal parameters.*
5. The body of a function is just like the body of main. That means you can have variable declarations and executable statements.
6. A function should contain statements that return values compatible with the function's return type.
7. The variables within the function are called *local variables*.
8. After executing the return statement, no further statements in the function body are executed.
9. The name of the function can come from the arguments that are compatible with the formal parameters, as indicated in statement D.
10. The arguments that are used in the call of the function are called *actual parameters.*
11. During the call, the value of the actual parameter is copied into the formal parameter and the function body is executed.
12. After the return statement, control returns to the next statement which is after the call of the function.

ABC Amber CHM Converter Trial version, http://www.processtext.com/abcchm.html

Points to Remember

1. A function provides modularity and readability to the software.
2. To define the function, you have to define the function name, the return data type and the formal parameters.
3. Functions do not require formal parameters.
4. If the function does not return any value, then you have to set the return data type as void.
5. A call to a function should be compatible with the function definition.

Previous Next

ABC Amber CHM Converter Trial version, http://www.processtext.com/abcchm.html

THE CONCEPT OF STACK

Introduction

A *stack* is memory in which values are stored and retrieved in "last in first out" manner by using operations called *push* and *pop*.

Program

Suppose you want to insert values in a stack and retrieve values from the stack. The operations would proceed in the following manner:

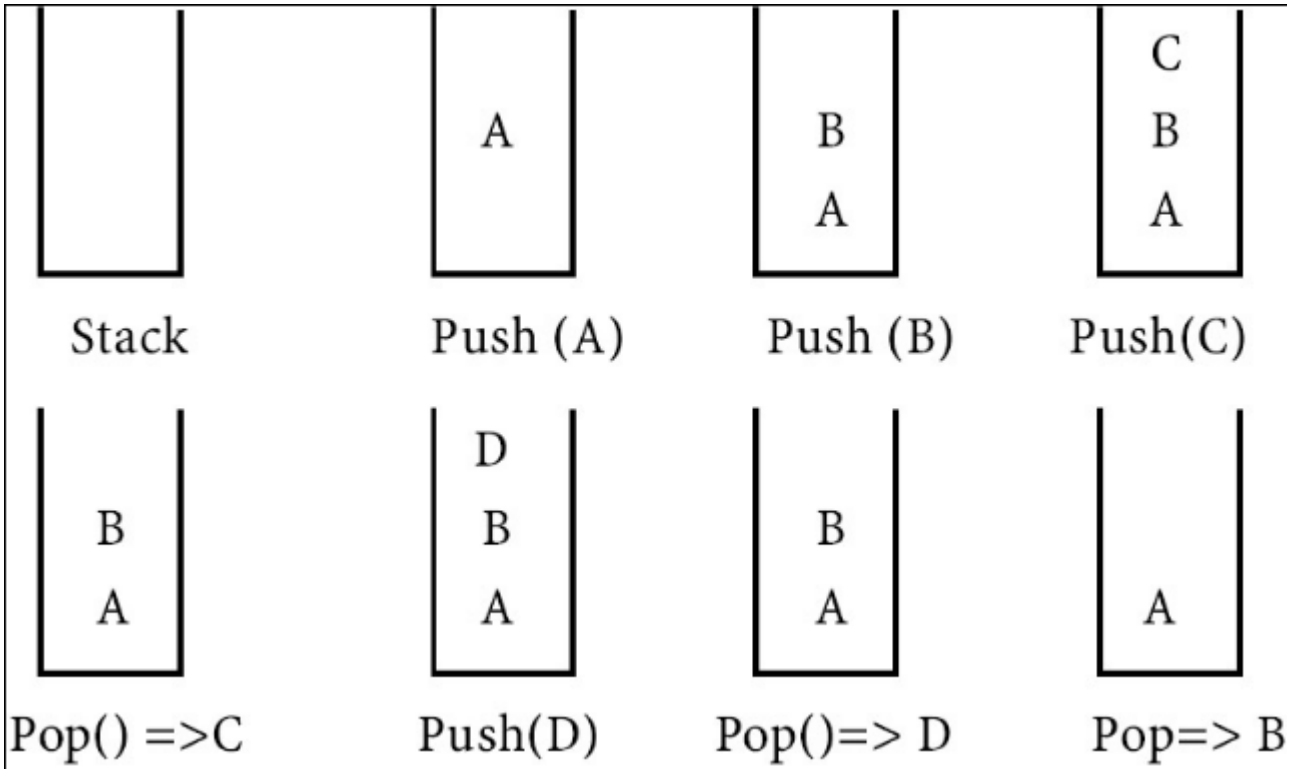

Explanation

1. Initially, the stack is empty. When you start `push A`, `A` is placed in the stack.
2. Similarly, `push B` and `push C` put these elements in the stack; the last element pushed is `C`.
3. The `pop` operation takes the topmost element from the stack. Thus the element `C`, which was put in last, is retrieved first. This method is called *last-in first-out (LIFO)*.
4. The `push D` operation puts element `D` in the stack above `B`.
5. Thus `push` puts the element on the top of the stack and `pop` takes the element from the top of the stack. The element `A` which is pushed is the last element taken from the stack.

Point to Remember

The last-in first-out retrieval from the stack is useful for controlling the flow of execution during the function call.

ABC Amber CHM Converter Trial version, http://www.processtext.com/abcchm.html

THE SEQUENCE OF EXECUTION DURING A FUNCTION CALL

Introduction

When the function is called, the current execution is temporarily stopped and the control goes to the called function. After the call, the execution resumes from the point at which the execution is stopped.

To get the exact point at which execution is resumed, the address of the next instruction is stored in the stack. When the function call completes, the address at the top of the stack is taken.

Program

```
main ( )
{
    printf ("1 \n"); // 1
    printf ("2 \n"); // 2
    printf ("3 \n"); // 3
    printf ("4 \n"); // 4
    printf ("5 \n"); // 5
    f1 ( );
    printf ("6 \n"); // 6
    printf ("7 \n"); // 7
    printf ("8 \n"); // 8
}
void f1 (void)
{
    printf ("f1-9 \n");      // 9
    printf ("f1-10 \n");     // 10
    f2 ( );
    printf ("f1-11 \n");     // 11
    printf ("f1-12 \n");     // 12
}
void f2 (void)
{
    printf ("f2-13 \n");     // 13
    printf ("f2-14 \n");     // 14
    printf ("f3-15 \n");     // 15
}
```

Explanation

1. Statements 1 to 5 are executed and function `f1( )` is called.
2. The address of the next instruction is pushed into the stack.
3. Control goes to function `f1( )`, which starts executing.
4. After the 10th statement, fuction `f2` is called and address of the next instruction, 11, is pushed into the stack.
5. Execution begins for function `f2` and statements 13, 14, and 15 are executed.
6. When `f2` is finished, the address is popped from the stack. So address 11 is popped.
7. Control resumes from statement 11.

8. Statements 11 and 12 are executed.
9. After finishing the `f1` address is popped from the stack, i.e. 6.
10. Statements 6, 7, and 8 are executed.
11. The execution sequence is `1 2 3 4 5 f1_9 f1_10 f2_13 f2_14 f2_15 f1_11 f1_12 6 7 8.`

Points to Remember

1. Functions or sub-programs are implemented using a stack.
2. When a function is called, the address of the next instruction is pushed into the stack.
3. When the function is finished, the address for execution is taken by using the `pop` operation.

Previous Next

ABC Amber CHM Converter Trial version, http://www.processtext.com/abcchm.html

PARAMETER PASSING

Introduction

Information can be passed from one function to another using parameters.

Program

```
main ( )
{
    int i;
    i = 0;
    printf (" The value of i before call %d \n", i);
    f1 (i);
    printf (" The value of i after call %d \n", i);
}
void f1 (int k)
{
    k = k + 10;
}
```

Explanation

1. The parameter used for writing the function is called the formal parameter, `k` in this case.
2. The argument used for calling the function is called the actual parameter.
3. The actual and formal parameters may have the same name.
4. When the function is called, the value of the actual parameter is copied into the formal parameter. Thus `k` gets the value 0. This method is called *parameter passing by value*.
5. Since only the value of `i` is passed to the formal parameter `k`, and `k` is changed within the function, the changes are done in `k` and the value of `i` remains unaffected.
6. Thus `i` will equal 0 after the call; the value of `i` before and after the function call remains the same.

Points to Remember

1. C uses the method of parameter passing by value.
2. In parameter passing by value, the value before and after the call remains the same.

ABC Amber CHM Converter Trial version, http://www.processtext.com/abcchm.html

CALL BY REFERENCE

Introduction

Suppose you want to pass a parameter under the following conditions:

1. You need to change the value of the parameter inside the function.
2. You are interested in the changed value after the function completes.

In languages such as Pascal, you have the option of passing the parameter by reference. C, however, does not support this. As explained in the previous example, you cannot have a changed value after the function call because C uses the method of parameter passing by value. Instead, you'll have to implement the function indirectly. This is done by passing the address of the variable and changing the value of the variable through its address.

Program

```
main ( )
{
    int i;
    i = 0;
   printf (" The value of i before call %d \n", i);
    f1 (&i);       // A
   printf (" The value of i after call %d \n", i);
}
void (int *k)          // B
{
    *k = *k + 10;      // C
}
```

Explanation

1. This example is similar to the previous example, except that the function is written using a pointer to an integer as a parameter.
2. Statement C changes the value at the location specified by `*k`.
3. The function is called by passing the address of `i` using notation `&i`.
4. When the function is called, the address of `i` is copied to `k`, which holds the address of the integer.
5. Statement C increments the value at the address specified by `k`.
6. The value at the address of `i` is changed to 10. It means the value of `i` is changed.
7. The `printf` statements after the function call prints the value 10, that is, the changed value of `i`.

Points to Remember

1. Call by reference is implemented indirectly by passing the address of the variable.
2. In this example, the address of `i` is passed during the function call. It does not change; only the value of the address is changed by the function.

ABC Amber CHM Converter Trial version, http://www.processtext.com/abcchm.html

THE CONCEPT OF GLOBAL VARIABLES

Introduction

The various modules can share information by using *global variables*.

Program

```
#include <stdio.h>
int i =0;     //Global variable
main()
{
    int j;          // local variable in main
    void f1(void) ;
    i =0;
    printf("value of i in main %d\n",i);
    f1();
    printf("value of i after call%d\n",i);
}
void f1(void)
{
    int k;            // local variable for f1.
    i = 50;
}
```

Explanation

1. When you define a variable inside the function block it is called a local variable.
2. The local variable can be accessed only in the block in which it is declared.
3. `j` is the local variable for main and it can be accessed only in the block main. That means you cannot access it in function `f1`.
4. `k` is the local variable for function `f1` and it cannot be accessed in main.
5. The variable `i`, which is outside main, is called a global variable. It can be accessed from function main as well as function `f1`.
6. Any expression in this function is going to operate on the same `i`.
7. When you call function `f1`, which sets the value of `i` to 50, it is also reflected in main because main and `f1` are referring to the same variable, `i`.

Points to Remember

1. Global variables can be accessed in all the functions in that file.
2. Any update to the global variable also affects the other functions, because all functions refer to the same value of i.
3. When you want to share information between multiple functions, you can use the concept of global variables.

ABC Amber CHM Converter Trial version, http://www.processtext.com/abcchm.html

RESOLVING VARIABLE REFERENCES

Introduction

When the same variable is resolved using both local definition and global definition, the local definition is given preference. This is called the rule of inheritance. It says that when you can resolve a reference to the variable by using multiple definitions, the nearest definition is given preference. Since local definition is the nearest, it gets preference.

Program

```
int i =0;            //Global variable  /A
main()
{
    int i ;                 // local variable for main  / B
    void f1(void) ;         //C
    i =0;                   // D
    printf("value of i in main %d\n",i);   // E
    f1();                                  // F
    printf("value of i after call%d\n",i); // G
}
void f1(void)                        // H
{
    int i=0;          //local variable for f1      // I
    i = 50;                                // J
}
```

Explanation

1. Here `i` is declared globally and locally in function main and in function `f1`, respectively, as given in statements A, B and I.
2. Statement D refers to `i`, which can be resolved by using both local definition and global definition. Local definition is given more preference. So statement D refers to the definition at statement B and all the statements in main refer to the definition at statement B, that is, the local definition.
3. When a function is called, statement `i` = 50 refers to the local definition in that function (definition at statement I).
4. Using statement G, the value of `i` is 0 because both main and function `f1` refer to their local copies of `i`. So the changed value of `f1` is not reflected in main.
5. Even if you comment local definition of function `f1` at statement I the value printed remains the same. This is because main refers to its local copy while `f1` refers to the global variable `i` — the two are different.

Point to Remember

When a variable can be resolved by using multiple references, the local definition is given more preference.

ABC Amber CHM Converter Trial version, http://www.processtext.com/abcchm.html

SYNTAX OF FUNCTION DEFINITION

Introduction

When specifying the function, you have to specify the return type, function name, parameter, list, and function body. Within the function body, you can have local definition and return statements.

Program/Example

The general format of a function is

```
<Return type>   <Function name>   <Parameter list>
{
    <local definitions>
     executable statements;
     Return (expression);
}

For example,
int f1 (int j, float f)
{
    int k;
    k = l;
    return (k);
}
```

Explanation

1. A function returns a value of the type that is specified by the return type. If you don't specify a written type, it is assumed that it returns an `int` value.
2. When the function does not return a value, you have to specify the return data type as void. When the function returns void, you may not write return in the body or you can write the return statement as `return;` .
3. All functions must be named.
4. You can specify parameters in the parameter list, separated by commas. While specifying the parameters, you have to specify the parameter data type and parameter name.
5. If you don't specify parameters, then you can specify only parentheses as shown here:
6.
7. `int f1( )`
8. When you want to use variables only for the function then you can declare them just as in main.
9. A function returns a value to the caller using the return statement. You may have multiple return statements and the return expression should evaluate to a value that is compatible with the return data type.
10. A function returns to the caller after executing the first return statement it encounters during execution.
11. A call to a function should match the definition of the function.
12. The order of parameters in the call is important because the actual parameter value is copied to the formal parameter value according to the order. It means that the first argument in the call is copied to the first parameter, the second argument is copied to the second parameter, etc.
13. When you are using whole numbers as parameters, it is better to declare them by using the data type `int`. Because all your lower data types' actual parameters can be used for passing the value, your function can be useful for multiple data types.
14. When you are using real numbers as parameters, it is better to declare them as double so that

the function can be used for both the float and double data types.

Points to Remember

1. While specifying the function you have to specify five main functions: written type, function name, parameter, list, function body and return statement.
2. Function name and function body are necessary, while the others are optional.

Previous Next

ABC Amber CHM Converter Trial version, http://www.processtext.com/abcchm.html

CALLING FUNCTION

Introduction

When a function is written before main it can be called in the body of main. If it is written after main then in the declaration of main you have to write the prototype of the function. The prototype can also be written as a global declaration.

Program

```
Case 1:
#include <stdio.h>
main ( )
{
    int i;
    void (int *k)          // D

    i = 0;
    printf (" The value of i before call %d \n", i);
    f1 (&i);          // A
    printf (" The value of i after call %d \n", i);
}
void (int *k)             // B
{
    *k = *k + 10;         // C
}

Case 2:

#include <stdio.h>
void (int *k)             // B
{
    *k = *k + 10;         // C
}

main ( )
{
    int i;
    i = 0;
    printf (" The value of i before call %d \n", i);
    f1 (&i);          // A
    printf (" The value of i after call %d \n", i);
}
```

ABC Amber CHM Converter Trial version, http://www.processtext.com/abcchm.html

```
Case 3:
#include <stdio.h>
void f1(int *k)                    // B
{
    *k = *k + 10;         // C
}
.
main ( )
{
    int i;
    i = 0;
printf ("The value of i before call %d \n", i);
    f1 (&i);          // A
printf ("The value of i after call %d \n", i);
}
```

Explanation

1. In Case 1, the function is written after main, so you have to write the prototype definition in main as given in statement D.
2. In Case 2, the function is written above the function main, so during the compilation of main the reference of function `f1` is resolved. So it is not necessary to write the prototype definition in main.
3. In Case 3, the prototype is written as a global declaration. So, during the compilation of main, all the function information is known.

Previous Next

ABC Amber CHM Converter Trial version, http://www.processtext.com/abcchm.html

Chapter 11: Storage of Variables

STORAGE

Introduction

In the variable declaration you can also define lifetime or storage duration of the variable. *Lifetime* indicates the length of time the variable value is guaranteed during execution. For example, if the variable is defined inside the function, its value is kept until the function executes. After completion of the function, the storage allocated for the variable is freed.

Program

```
#include <stdio.h>
int g = 10;   \\ A
main()
{
    int i =0;  \\ B
    void f1(); \\ C
    f1();             \\ D
    printf(" after first call \n");
    f1();             \\ E
    printf("after second call \n");
    f1();             \\ F
    printf("after third call \n");

}
void f1()
{
    static int k=0;   \\ G
    int j = 10;              \\ H
    printf("value of k %d j %d",k,j);
    k=k+10;
}
```

Explanation

1. Variables in C language can have automatic or static lifetimes. Automatic means the variable is in existence until the function in which it is defined executes; static means the variable is retained until the program executes.
2. The variable that is defined outside the function, such as `g` in statement A, is called a global variable because it is accessible from all the functions. These global variables have static lifetimes, that is, variable return throughout the program execution. The value of the variable, as updated from one function, affects another function that refers to that variable. It means that the updating in this variable is visible to all functions.
3. Variables such as `i`, defined in main, or `j`, defined in `f1`, are of the automatic type; i exists until main is completed and `j` exists until `f1` is completed.
4. You can define the lifetime of a local variable in a function as given in statement G. The variable `k` has a static lifetime; its value is returned throughout the execution of the program.

5. The function `f1` increments the value of `k` by 10 and prints the values of `j` and `k`.
6. When you call the function for the first time using statement D, `k` is printed as 0, `j` is printed as 10, `k` is incremented to 10, the space of `j` is reallocated, and `j` ceases to exist.
7. When you call the function the second time, it will give 10 (the previous value of `k`) because `k` is a static variable. There are reallocations for `j` so `j` is printed as 10.
8. When you call the function the third time, `j` is still printed as 10.

Points to Remember

1. The variables in C can have static or automatic lifetimes.
2. When a variable has a static lifetime, memory is allocated at the beginning of the program execution and it is reallocated only after the program terminates.
3. When a variable has an automatic lifetime, the memory is allocated to the variable when the function is called and it is deallocated once the function completes its execution.
4. Global variables have static lifetimes.
5. By default, local variables have automatic lifetimes.
6. To make a local variable static, use the storage-class specifier.

Previous Next

ABC Amber CHM Converter Trial version, http://www.processtext.com/abcchm.html

EXTERNAL REFERENCES

Introduction

In collaborative software development it is common for multiple users to write programs in different files. For example, one user implements function `f1`, a second user implements function `f2`, while a third user implements the main function. C has a provision to compile programs even if function or variable implementation is not available. In such cases, the program is compiled but it is not yet fit for execution. The program is not executable until all the references in the file are available.

Program

```
\\ Program in file externa1.c

#include <stdio.h>                  \\ A
#include <d:\cbook\storage\f1.cpp> \\ B
extern int i;                               \\ C
main()
{
    i =0;                                                   \\ D
    printf("value of i %d\n",i);
}

\\ Program in file f1.cpp

int i =7;                                           \\ E
```

Explanation

1. Here the program is written in two files: `extern1.c` has the main and reference of variable `i`.
2. The file `f1.cpp` has the declaration of `i`.
3. In the file `extern.c` there is a reference of `i` so the compiler should know the data type of `i`. This is done using the extern definition by statement C. *Extern* means that the variable or function is implemented elsewhere but is referred to in the current file.
4. Statement D refers to `i`.
5. The definition of `i` is given in the file `f1.cpp`, as given by statement E.
6. In the absence of an `include` directive in statement B, you can still compile the file; it will give no errors. Such a file is called an *object file*. *It is not fit for execution* because the reference of `i` is not resolved.
7. When you write statement B the reference of `i` is re-sorted and the executable file can be made.

Points to Remember

1. Extern definition is used when you have to refer a function or variable that is implemented elsewhere or it will be implemented later on.
2. When all the references are resolved then only the executable file is made.

ABC Amber CHM Converter Trial version, http://www.processtext.com/abcchm.html

REGISTER VARIABLES

Introduction

When you want to refer a variable, many times you can allocate fast memory in the form of a register to that variable. For variables such as loop counters, register allocation is done. The processor has memory in the form of register for its temporary storage. The access time of the register is much less than main memory. That is the reason that register allocation provides more speed. But the processor has a limited number of registers. So the register declaration acts as a directive; it does not guarantee the allocation of a register for storing value of that variable.

Program

```
#include <stdio.h>
main()
{
    register int i = 0;     \\ A

    for( i=0;i<2;i++)
    {
        printf("value of i is %d\n",i);
    }
}
```

Explanation

1. Here the register allocation directive is given for variable `i`. During execution, `i` will be allocated a register if it is available; otherwise, `i` will receive normal memory allocations.
2. You can use a register directive only for variables of the automatic storage class, not for global variables.
3. Generally, you can use register storage for `int` or `char` data types.

   Note You cannot use register allocation for global variables because memory is allocated to the global variable at the beginning of the program execution. At that time, it is not certain which function is invoked and which register is used. Function code may use the register internally, but it also has access to a global variable, which might also use the same register. This leads to contradiction, so global register variables are not allowed.

Points to Remember

1. Register allocation is done for faster access, generally for loop counters.
2. You cannot declare global register variables.

ABC Amber CHM Converter Trial version, http://www.processtext.com/abcchm.html

SCOPE OF VARIABLES

Introduction

In C you can define a variable in the block. The blocks are marked using { and } braces. The blocks can also be defined using the `for` statement. The scope of the variable is in the block in which it is declared, meaning that you can use that variable anywhere in the block. Even if some block is declared in that block, you can use that variable. When the variable is referred in the block and if it can be resolved using two definitions, then the nearest definition has more precedence. So the variable is interpreted according to the nearest definition. Even if the two definitions define two different data types for variables, they are accepted.

Program

```
#include <stdio.h>
main()
{       \\ Block 1
    int i = 10;       \\ A

    {          \\ Block 2
        int i = 0;              \\ B
        for( i=0;i<2;i++)    \\ C
        {
               printf("value of i is %d\n",i);
        }      \\ End of block 2
    }
    printf("the value of i is %d\n",i);    \\ D
}   \\ End of block 1
```

Explanation

1. The statement `block 1` defines the start of block 1.
2. The statement '`end of block 1`' defines the end of block 1.
3. Statement A defines variable `i` which has the scope in the entire block 1.
4. The statement `block 2` defines the start of block 2.
5. The statement '`end of block 2`' defines the end of block 2.
6. Statement B defines variable `i` which is entirely in block 2.
7. The `for` loop refers `i`, which can be resolved using two definitions: statement A and statement B.
8. Since the definition of statement B is nearest, the variable is referred using that definition, so the `for` loop modifies the value of `i` at statement B.
9. Variable `i` at statement A and variable `i` at statement B are two independent variables even though they have the same name. Statement D is outside block 2, so it prints the value of variable `i` in block 1.

Points to Remember

1. In C, you can define variables in the block, which is demarcated by using { and } braces. The variable has the scope inside the block in which it is declared.
2. When the variable is resolved using two definitions, the nearest definition has more precedence.

ABC Amber CHM Converter Trial version, http://www.processtext.com/abcchm.html

FURTHER SCOPE OF VARIABLES

Introduction

In C, you can define the counter in the `for` loop itself; the counter has scope up to the end of the `for` loop.

Program

```
#include <stdio.h>
main()
{
    int k = 10;

    }
       for(int  i=0;i<2;i++)\\ A
       {       \\ B
               printf("value of i is %d\n",i);     \\ C
       }       \\ D
    {
    printf("the value of i is %d\n",i);      \\ E
}
```

Explanation

1. The counter variable `i` is defined at statement A.
2. The scope of the `for` loop is up to statement D, which is the end of the `for` loop for statement B.
3. If you do not comment out statement E, you will get an error, because you cannot refer `i` in the outside block.

Point to Remember

You can define counter variable inside the `for` loop.

ABC Amber CHM Converter Trial version, http://www.processtext.com/abcchm.html

Chapter 12: Memory Allocation

DYNAMIC MEMORY ALLOCATIONS

Introduction

You can use an array when you want to process data of the same data type and you know the size of the data. Sometimes you may want to process the data but you don't know what the size of the data is. An example of this is when you are reading from a file or keyboard and you want to process the values. In such a case, an array is not useful because you don't know what the dimension of the array should be. C has the facility of dynamic memory allocations. Using this, you can allocate the memory for your storage. The allocation is done at runtime. When your work is over, you can deallocate the memory. The allocation of memory is done using three functions: `malloc`, `relloc`, and `calloc`. The functions return the pointers to void, so it can be typecast to any data type, thus making the functions generic. These functions take the input as the size of memory requirement.

Program

```
#include <stdio.h>
#include <malloc.h>
main()
{
    int *base;        \\ A
    int i;
    int cnt=0;
    int sum=0;
    printf("how many integers you have to store \n");
    scanf("%d",&cnt);    \\ B
    base = (int *)malloc(cnt * sizeof(int));     \\ C
    printf("the base of allocation is %16lu \n",base);   \\ D
    if(!base)  \\ E
        printf("unable to allocate size \n");
    else
    {
        for(int j=0;j<cnt;j++)            \\ F
               *(base+j)=5;
    }
    sum = 0;
    for(int j=0;j<cnt;j++)                \\ G
        sum = sum + *(base+j);
    printf("total sum is %d\n",sum);
    free(base);              \\ H
    printf("the base of allocation is %16lu \n",base);
    base = (int *)malloc(cnt * sizeof(int));
    printf("the base of allocation is %16lu \n",base);
    base = (int *)malloc(cnt * sizeof(int));             \\ I
```

```
    printf("the base of allocation is %16lu \n",base);
    base = (int *)calloc(10,2);                          \\ J
    printf("the base of allocation is %16lu \n",base);
}
```

Explanation

1. This program demonstrates the use of dynamic memory allocation for processing `n` integers where `n` is not defined at compilation time, but the user instead specifies the number of integers to be processed.
2. The processing adds 5 to the value of each integer.
3. Statement B reads how many integers you have to process.
4. Statement C allocates memory for the required integers by using the function `malloc`.
5. `malloc` takes the size in bytes as input.
6. The size of the operator returns how many bytes can be occupied by one unit of the specified data type. The size of `int` returns two bytes. If you give the value `cnt` as 10 then it will allocate 20 bytes.
7. `malloc` returns the pointer to void, which is typecast as a pointer to an integer. The value starts at the address of the memory from where allocations are done. The value is stored in the variable base, which is declared at statement A. If memory allocations cannot be done, the base will get the value 0, which can be tested using an `if` statement. The `for` loop F puts a value of 5 in the allocated memory. Note that the first value is stored in the location specified by the base and the next value is stored according to base `+j`. If the base is 100 and `j` is 1 then the value of base + 1 is 102, according to pointer arithmetic, and not 101, because this is a pointer to an integer and an integer occupies two bytes. You can retreive the value by using a pointer to an integer as specified by the `for` loop in statement G. After your work is over, you can return the memory using the function `free`. `free` takes a pointer to storage as input.
8. You can again allocate more or less memory by using the function `malloc`. You can again allocate memory without deallocating previous memory as given by statement I. You can allocate the memory similarly to `malloc` by using the function `calloc`. `calloc` takes two arguments: total number of data and the size of each data.

Points to Remember

You can allocate memory at runtime by using the function `malloc`. `malloc` allocates memory specified using an argument in terms of bytes, and returns the pointer to storage from where the memory is allocated. You can deallocate the memory by using the function `free`.

The prototypes of the function are available in the hidden files `malloc.h`.

Previous Next

ABC Amber CHM Converter Trial version, http://www.processtext.com/abcchm.html

Chapter 13: Recursion

RECURSION

Introduction

You can express most of the problems in the following program by using *recursion.* We represent the function `add` by using recursion.

Program

```
#include <stdio.h>
int add(int pk,int pm);
main()
{
    int k ,i,m;
    m=2;
    k=3;
    i=add(k,m);.
    printf("The value of addition is %d\n",i);
}
int add(int pk,int pm)
{
    if(pm==0) return(pk);           \\ A
    else return(1+add(pk,pm-1));    \\ B
}
```

Explanation

1. The `add` function is recursive as follows:
2.
3. `add (x, y) = 1 + add(x, y-1)  y > 0`
4. `= x  y = 0`
5. `for example,`
6. `add(3, 2) = 1 + add(3, 4)`
7. `add(3, 1) = 1 + add(3, 0)`
8. `add(3, 0) = 3`
9. `add(3, 1) = 1+3 = 4`
10. `add(3, 2) = 1+4 = 5`
11. The recursive expression is `1+add(pk, pm-1)`. The terminating condition is `pm = 0` and the recursive condition is `pm > 0`.

ABC Amber CHM Converter Trial version, http://www.processtext.com/abcchm.html

STACK OVERHEADS IN RECURSION

Introduction

If you analyze the address of local variables of the recursive function, you will get two important results: the depth of recursion and the stack overheads in recursion. Since local variables of the function are pushed into the stack when the function calls another function, by knowing the address of the variable in repetitive recursive call, you will determine how much information is pushed into the stack. For example, the stack could grow from top to bottom, and the local variable `j` gets the address 100 in the stack in the first column. Suppose stack overheads are 16 bytes; in the next call `j` will have the address 84, in the call after that it will get the address 16. That is a difference of 16 bytes. The following program uses the same principle: the difference of the address in consecutive calls is the stack overhead.

Program

```
#include <stdio.h>
int fact(int n);
long old=0;   \\E
long current=0;      \\F
main()
{
    int k = 4,i;
    long diff;
    i =fact(k);
    printf("The value of i is %d\n",i);
    diff = old-current;
    printf("stack overheads are %16lu\n",diff);
}
int fact(int n)
}
    int j;
    static int m=0;
    if(m==0) old =(long) &j; \\A
    if(m==1) current =(long) &j;    \\B
    m++;              \\C
    printf("the address of j and m is %16lu %16lu\n",&j,&m);   \\D
    if(n<=0)
       return(1);
    else
        return(n*fact(n-1));
}
```

Explanation

1. The program calculates factorials just as the previous program.
2. The variable to be analyzed is the local variable `j`, which is the automatic variable. It gets its location in the stack.
3. The static variable `m` is used to track the number of recursive calls. Note that the static variables

are stored in memory locations known as data segments, and are not stored in stack. Global variables such as `old` and `current` are also stored in data segments.

4. The program usually has a three-segment text: first, storing program instructions or program code, then the data segment for storing global and static variables, and then the stack segment for storing automatic variables.
5. During the first call, `m` is 0 and the value of `j` is assigned to the global varable `old`. The value of `m` is incremented.
6. In the next call, `m` is 1 and the value of `j` is stored in current.
7. Note that the addresses of `j` are stored in long variables of type castings.
8. `old` and `current` store the address of `j` in consecutive calls, and the difference between them gives the stack overheads.
9. You can also check the address of `j` and check how the allocation is done in the stack and how the stack grows.

Note You can also check whether the address of m is constant.

Points to Remember

1. The recursive program has a stack overhead.
2. You can calculate stack overheads by analyzing the addresses of local variables.

Previous Next

ABC Amber CHM Converter Trial version, http://www.processtext.com/abcchm.html

WRITING A RECURSIVE FUNCTION

Introduction

A recursive function is a function that calls itself. Some problems can be easily solved by using recursion, such as when you are dividing a problem into sub- problems with similar natures. Note that recursion is a time-consuming solution that decreases the speed of execution because of stack overheads. In recursion, there is a function call and the number of such calls is large. In each call, data is pushed into the stack and when the call is over, the data is popped from the stack. These push and pop operations are time-consuming operations. If you have the choice of iteration or recursion, it is better to choose iteration because it does not involve stack overheads. You can use recursion only for programming convenience. A sample recursive program for calculating factorials follows.

Program

```
#include <stdio.h>
int fact(int n);
main()
{
    int k = 4,i;
    i =fact(k);         \\ A
    printf("The value of i is %d\n",i);
}
int fact(int n)
{
    if(n<=0)           \\ B
    return(1);            \\ C
else
    return(n*fact(n-1)); \\ D
}
```

Explanation

1. You can express factorials by using recursion as shown:
2.
3. `fact (5) = 5 * fact (4)`
4. `In general,`
5. `fact (N) = N * fact (N-1)`
6. `fact 5 is calculated as follows:`
7. `fact (5) = 5 * fact (4) i.e. there is call to fact (4) \\ A`
8. `fact (4) = 4 * fact (3)`
9. `fact (3) = 3 * fact (2)`
10. `fact (2) = 2 * fact (1)`
11. `fact (1) = 1 * fact (0)`
12. `fact (0) = 1 \\ B`
13. `fact (1) = 1 * 1, that is the value of the fact(0) is substituted in 1.`
14. `fact (2) = 2 * 1 = 2`
15. `fact (3) = 3 * 2 = 6`
16. `fact (4) = 4 * 6 = 24`
17. `fact (5) = 5 * 24 = 120 \\ C`
18. The operations from statements B to A are collectivelly called the *winding phase*, while the operations from B to C are called the unwinding phase. The winding phase should be the

terminating point at some time because there is no call to function that is given by statement B; the value of the argument that equals 0 is the terminating condition. After the winding phase is over, the unwinding phase starts and finally the unwinding phase ends at statement C. In recursion, three entities are important: recursive expressions, recursive condition, and terminating condition. For example,

19.
20. `fact ( N) = N * fact (N-1) N > 0`
21. `= 1 N = 0`
    - `N * fact (N-1)` indicates a recursive expression.
    - `N > 0` indicates a recursive condition.
    - `N = 0` indicates a terminating condition.
22. You should note that the recursive expression is such that you will get a terminating condition after some time. Otherwise, the program enters into an infinite recursion and you will get a stack overflow error. Statement B indicates the terminating condition, that is, `N = 0`.
23. The condition `N > 0` indicates a recursive condition that is specified by the `else` statement. The recursive expression is n `* fact(n-1)`, as given by statement D.

Points to Remember

1. Recursion enables us to write a program in a natural way. The speed of a recursive program is slower because of stack overheads.
2. In a recursive program you have to specify recursive conditions, terminating conditions, and recursive expressions.

Previous Next

ABC Amber CHM Converter Trial version, http://www.processtext.com/abcchm.html

Chapter 14: Strings

STRINGS AS AN ARRAY OF CHARACTERS

Introduction

A *string* is defined as an array of characters. Strings are terminated by the special character `'\o'`; this is called a *null parameter* or *null terminator*. When you declare the string, you should ensure that you should have sufficient room for the null terminator. The null terminator has ASCII value 0.

Program

```
main ( )
{
    char s1[6];       \\ A
    char s2[6];
    char ch;
    int cnt = 0;
    s1 = "Hello";       \\ B
    printf ("%s \n", s1);       \\ C
    s2 = {'H', 'e', 'l', 'l', 'o'}  \\ D
    printf("%s \n", s2);                \\ E
    while (  (ch = getchar() )! = '#' && (cnt < 6-1) )          \\ F
        s1[cnt++] = ch;               \\ G
    s1[cnt] = '\0';           \\ H
}
```

Explanation

1. The size of the string is 6, which is the last element terminator, so you can use only 5 positions.
2. In statement B, the string "Hello" is assigned so that the array elements are
3.
4. `H  e  l  l  o  \0`
5. The null terminator is appended automatically.
6. Statement B puts the data in a string using standard array notation.
7. You can print a string using the placeholder `%s`; the string is printed until it encounters a null character.
8. The `while` loop in statement H inputs the string by reading character by character.
9. The function `getchar` returns the character.
10. Note that the counter is incremented up to 5 so as to accommodate the last null terminator.
11. The null terminator is put in place by statement H.
12. The `while` loop can be terminated before counter 5 by putting in the # character.

Points to Remember

1. A string is a character array with a null terminator at the end.
2. You can initialize the array using different methods.

ABC Amber CHM Converter Trial version, http://www.processtext.com/abcchm.html

STRING DEFINITION

Introduction

A string can be defined using a character array or a pointer to characters. Although the two definitions look similar, they are actually different.

Program

```
main ( )
{
    char * s1 = "abcd";      \\ A
    char s2[] = "efgh";       \\ B
    printf( "%s %16lu \n, s1, s1);    \\ C
    printf( "%s %16lu \n, s2, s2);     \\ D
    s1 = s2;                    \\ E
    printf( "%s %16lu \n, s1, s1);     \\ F
    printf( "%s %16lu \n, s2, s2);     \\ G
}
```

Explanation

1. Statement A declares `s1` as a pointer to a character. When this definition is encountered, the compiler allocates space for the string `abcd`; the base address of the string is assigned to `s1`, which is the pointer variable.
2. Statement B declares `s2` as a character array. The size of the array is 5 because of an additional null terminator in this case. Also, a space of 5 characters is allocated and the base address is given to `s2`, which is the pointer constant. During the lifetime of the program, we cannot change the value of `s2`.
3. The allocation for `s1` is the allocation required by the pointer variable.
4. Statement C prints `s1`, using two place holders: `%s` and `%16lu`. Using `%s`, you will print the string as "`abcd`". Using `%16lu` you will print the base address of the string.
5. Statement E assigns a base address of `s2` to `s1`; that is possible because `s1` is a variable.

Point to Remember

When the string is declared as a character pointer, a space is allocated for the pointer variable, which holds the base address of the string.

ABC Amber CHM Converter Trial version, http://www.processtext.com/abcchm.html

STRINGS AS PARAMETERS

Introduction

The string can be passed to a function just as in a normal array. The following examples are used for printing the number of characters in the string:

Program

```
main ( )
{
    char s1[6] = "abcde ";
    int cnt = 0;
    cnt = cnt_str(s1);        \\ A
    printf( " total characters are %d \n", cnt);
}
int cnt_str(char s1[]);        \\ B
{
    int cn = 0;
   while ( (cn < 6) && s1[cn]! = '\0')
    cn++;
    return(cn);
}
```

Explanation

1. A function, `cnt_str`, calculates the number of characters in a string. The string is passed just as a character array. When the array is passed, the base address of the array is actually what gets passed.
2. Statement B is called to a function in which `s1` is passed just as a normal array.

ABC Amber CHM Converter Trial version, http://www.processtext.com/abcchm.html

Chapter 15: Structures

STRUCTURES

Introduction

Structures are used when you want to process data of multiple data types but you still want to refer to the data as a single entity. Structures are similar to records in Cobal or Pascal. For example, you might want to process information on students in the categories of name and marks (grade percentages). Here you can declare the structure 'student' with the fields 'name' and 'marks', and you can assign them appropriate data types. These fields are called members of the structure. A member of the structure is referred to in the form of `structurename.membername`.

Program

```
struct student      \\ A
{
    char name[30];   \\ B
    float marks;     \\ C
}   student1, student2;      \\ D

main ( )
{
    struct student student3; \\ E
    char s1[30];             \\ F
    float f;                 \\ G
    scanf ("%s", name);      \\ H
    scanf (" %f", & f);  \\ I
    student1.name = s1;      \\ J
    student2.marks = f;      \\ K
    printf (" Name is %s \n", student1.name);      \\ L
    printf (" Marks are %f \n", student2.marks);   \\ M
}
```

Explanation

1. Statement A defines the structure type `student`. It has two members: `name` and `marks`.
2. Statement B defines the structure member `name` of the type `character 30`.
3. Statement C defines the structure member `marks` of the type `float`.
4. Statement D defines two structure variables: `structure1` and `structure2`. In the program you have to use variables only. Thus `struct student` is the data type, just as `int` and `student1` is the variable.
5. You can define another variable, `student3`, by using the notations as specified in statement E.
6. You can define two local variables by using statements F and G.
7. Statement J assigns `s1` to a member of the structure. The structure member is referred to as structure `variablename.membername`. The member `student1.name` is just like an ordinary string, so all the operations on the string are allowed. Similarly, statement J assigns a value to `student1.marks`
8. Statement L prints the marks of `student1` just as an ordinary string.

ABC Amber CHM Converter Trial version, http://www.processtext.com/abcchm.html

Points to Remember

1. Structures are used when you want to process data that may be of multiple data types.
2. Structures have members in the form:
3.
4. `structurename.membername.`

Previous Next

ABC Amber CHM Converter Trial version, http://www.processtext.com/abcchm.html

COMPLEX STRUCTURE DEFINITIONS

Introduction

You can define structures of arrays or arrays of structures, etc. The following section gives definitions of complex structures.

Program

```
Struct address      \\ A
{
    plot char [30], struc char[30];
    city char[30]
}
struct student      \\ B
{
    name char[30];
    marks float;
    struct address adr;     \\ C
}
main ( )
{
    struct student student1; \\ D
    struct student class[20];      \\ E
    class[1].marks = 70;     \\ F
    class[1].name = " Anil ";
    class[1].adr.plot = "7 ";        \\ G
    class[1].adr.street = " Mg Road";
    class[1].adr.city = "mumbai";

    printf( " Marks are %d\n", class[1].marks);
    printf( " name are %s\n", class[1].name);
    printf( " adr.plot is %s\n", class[1].adr.plot);
    printf( " adr.street is %s\n", class[1].adr.stret);
    printf( " adr.city is %s\n", class[1].adr.city);
}
```

Explanation

1. Statement A declares the address of a structure containing the members `plot`, `street` and `city`.
2. Statement B declares a structure having 3 members: `name`, `marks`, and `adr`. The data type of `adr` is structure address, which is given by statement C.
3. Statement D defines the variable `student1` of the data type `struct student`.
4. Statement E defines an array class with 20 elements. Each element is a structure.
5. You can refer to marks of the students of `class[1]` using the notation `class[1].marks`. `class[1]` indicates the first element of the array, and since each element is a structure, a

member can be accessed using dot notation.

6. You can refer to the plot of a student of `class[1]` using the notation `class[1].adr.plot`. Since the third element of the structure is `adr`, and `plot` is a member of `adr`, you can refer to members of the nested structures.
7. If you want to refer to the first character of the character array `plot`, then you can refer it as
8.
9. `Class[1].adr.plot[0]`

because `plot` is a character array.

Points to Remember

1. When a structure is a member of another structure it is called a *nested structure*.
2. You can define structures of arrays or arrays of structures, and the members are referred to using dot notations.

Previous Next

ABC Amber CHM Converter Trial version, http://www.processtext.com/abcchm.html

MEMORY ALLOCATION TO STRUCTURE

Introduction

For each structure, variable memory is allocated. The following sections give the memory layout of the structure `student1`.

Program/Example

```
student1
          student1     0     name
30        marks
34        adr                plot
64        street
94                           city
```

Explanation

1. Suppose the base address of the allocations is 0; then the first member `name` starts from 0.
2. Since `name` has 30 characters, the second member, `marks`, starts from location 30; `marks` occupies 4 bytes.
3. The third member, `adr`, starts from location 34, so the first member of `adr` starts from location 34. Period `plot` occupies 30 bytes, so `street` starts at 64.
4. `city` starts at 94.
5. You can print the addresses of the members using the following `printf` statements:
6.
7. `printf( "16lu\n", &student1.marks);`
8. `printf( "16lu\n", &student1.adr.plot);`

Point to Remember

The structure members are allocated consecutive memory locations.

ABC Amber CHM Converter Trial version, http://www.processtext.com/abcchm.html

PROGRAMMING WITH STRUCTURES

Introduction

You can write programs with structures by using modular programming.

Program

```
struct student
{
    name char[30];
    marks float;
}
main ( )
{
    struct student student1;
    student1 = read_student ( )
    print_student( student1);
    read_student_p(student1);
    print_student (student1);
}
struct student read_student( )      \\ A
{
    struct student student2;
    gets(student2.name);
    scanf("%d",&student2.marks);
    return (student2);
}
void print_student (struct student student2)      \\ B
{
    printf( "name is %s\n", student2.name);
    printf( "marks are%d\n", student2.marks);
}
void read_student_p(struct student student2)      \\ C
{
    gets(student2.name);
    scanf("%d",&student2.marks);
}
```

Explanation

1. The function `read_student` reads values in structures and returns the structure.
2. The function `print_student` takes the structure variable as input and prints the content in the structure.
3. The function `read_student_p` reads the data in the structure similarly to `read_student`. It takes the structure `student` as an argument and puts the data in the structure. Since the data of a member of the structure is modified, you need not pass the structure as a pointer even

though structure members are modified. Here you are not modifying the structure, but you are modifying the structure members through the structure.

Points to Remember

1. You can write a function that returns the structure. While writing the function, you should indicate the type of structure that is returned by the function. The `return` statement should return the structure using a variable.
2. You can pass a structure as an argument. You can modify a member of the structure by passing the structure of an argument. The changes in the member made by the function are retained in the called module. This is not against the principle of call by value because you are not modifying the structure variable, but are instead modifying the members of the structure.

Previous Next

ABC Amber CHM Converter Trial version, http://www.processtext.com/abcchm.html

STRUCTURE POINTERS

Introduction

You can process the structure using a *structure pointer*.

Program

```
struct student       \\ A
{
    char name[30];   \\ B
    float marks;     \\ C
};              \\ D

main ( )
{
    struct student *student1;      \\ E
    struct student student2; \\ F
    char s1[30];
    float f;
    student1 = &student2;    \\ G
    scanf ("%s", name);          \\ H
    scanf (" %f", & f);      \\ I
    *student1.name = s1;         \\ J student1-> name = f;
    *student2.marks = f;         \\ K student1-> marks = s1;

    printf (" Name is %s \n", *student1.name);    \\ L
    printf (" Marks are %f \n", *student2.marks); \\ M
}
```

Explanation

1. Statement E indicates that `student1` is the pointer to the structure.
2. Statement F defines the structure variable `student2` so that memory is allocated to the structure.
3. Statement G assigns the address of the structure `student2` to the pointer variable structure `student1`.
4. In the absence of statement G, you cannot refer to the structure using a pointer. This is because when you define the pointer to the structure, the memory allocation is done only for pointers; the memory is not allocated for structure. That is the reason you have to declare a variable of the structure type so that memory is allocated to the structure and the address of the variable is given to the point.
5. Statement J modifies a member of the structure using the * notation. The alternative notation is
6.
7. `student1-> name = f;`
8. `student1-> marks = s1;`

Points to Remember

1. You can access members of the structure using a pointer.
2. To access members of the structure, you have to first create a structure so that the address of

ABC Amber CHM Converter Trial version, http://www.processtext.com/abcchm.html

the structure is assigned to the pointer.

Previous Next

ABC Amber CHM Converter Trial version, http://www.processtext.com/abcchm.html

Chapter 16: Union

UNION

Introduction

Union is a composite type similar to structure. Even though it has members of different data types, it can hold data of only one member at a time.

Program

```
union marks          \\ A
{
    float perc;      \\ B
    char grade;      \\ C
}
main ( )
{
    union marks student1;    \\ E
    student1.perc = 98.5;    \\ F
    printf( "Marks are %f   address is %16lu\n",
        student1.perc, &student1.perc);  \\ G
    student1.grade = 'A'';   \\ H
    printf( "Grade is %c address is %16lu\n",
        student1.grade, &student1.grade);  \\ I
}
```

Explanation

1. Statement A declares a union of the type `marks`. It has two members: `perc` and `grade`. These two members are of different data types but they are allocated the same storage. The storage allocated by the union variable is equal to the maximum size of the members. In this case, the member `grade` occupies 1 byte, while the member `perc` occupies 4 bytes, so the allocation is 4 bytes. The data is interpreted in bytes depending on which member you are accessing.
2. Statement E declares the variable `student1` of the type union.
3. Statement F assigns a value to a member of the union. In this case, the data is interpreted as the `float` data type.
4. Statement H assigns character 'A' to member `grade`. `student1.grade` interprets the data as character data.
5. When you print the value of the member `perc`, you have to use the placeholder `%type`. Note that the addresses printed by both `printf` statements are the same. This means that both members have the same memory location.

Points to Remember

1. In a union, the different members share the same memory location.
2. The total memory allocated to the union is equal to the maximum size of the member.
3. Since multiple members of different data types have the same location, the data is interpreted according to the type of the member.

ABC Amber CHM Converter Trial version, http://www.processtext.com/abcchm.html

ABC Amber CHM Converter Trial version, http://www.processtext.com/abcchm.html

Chapter 17: Files

THE CONCEPT OF FILES

Introduction

A *file* is a data object whose lifetime may be greater than the lifetime of a program responsible for creating it, because it is created on secondary storage devices. It is used to store persistent data values and information. The files are used mainly for input and output of data to an external operating environment. The components of the file are called as records (this term has nothing to do with record data structure).

Types of Files

A file may be a *sequential file*, a *direct-access file*, or an *indexed sequential file*. A sequential file can be thought of as a linear sequence of components of the same type with no fixed maximum bound. The major operations on the sequential files are:

Open operation: When a file is to be used, it is first required to be opened. The open operation requires two operands: the name of the file and the access mode telling whether the file is to be opened for reading or writing. If the access mode is "read," then the file must exist. If the access mode is "write," then if the file already exists, that file is emptied and the file position pointer is set to the start of the file. If the file does not exist then the operating system is requested to create a new empty file with a given name. The open operation requests the information about the locations and other properties of the file from the operating system. The operating system allocates the storage for this information and for buffers, and sets the file-position pointer to the first component of the file. The runtime library of C provides an `fopen(name,mode)` function for it. This function returns a pointer to the internal structure called FILE (you get the definition of this structure in `stdio.h`). This pointer is called a *file descriptor*; it is used by the C program to refer to the file for reading or writing purposes.

Read operation: This operation transfers the current file component to the designated program variable. The runtime library of C provides a function `fgetc(fp)`, where `fp` is a file descriptor, for `fscanf()`. `fscanf()` is similar to `scanf()` except that one extra parameter, `fp`, is required to be passed as the first parameter. The second and third parameters are the same as the first and second parameters of `scanf()`.

Write operation: This operation transfers the contents of the designated program variable to the new component created at the current position. The runtime library of C provides a function `fputc(c,fp)`, where `fp` is a file descriptor, and `c` is a character to be written in the file `fprintf()`. `fprintf()` is similar to `printf()` except that one extra parameter, `fp`, is required to be passed as the first parameter. The second and third parameters are the same as the first and second parameters of `printf()`.

Close operation: This operation notifies the operating system that the file can be detached from the program and that it can deallocate the internal storage used for the file. The file generally gets closed implicitly when the program terminates without explicit action by the programmer. But when the access mode is required to be changed it is required to be closed explicitly and reopened in the new mode. The runtime library of C provides an `fclose(fp)` function for it.

Random Access

Each read and write operation takes place at a position in the file right after the previous one. But it is possible that you may need to read or write the file in any arbitrary order. The runtime library of C provides an `fseek(fp, offset, from_where)` function for this. This function forces the current position in the file, whose descriptor is `fd`, to move by offset bytes from either the beginning of the file, the current file pointer position, or from the end of the file, depending upon the value of `from_where`. The parameter `from_where` must have one of the values (0, 1, or 2) that represent three symbolic constants (defined in `stdio.h`) as shown in Table 17.1.

ABC Amber CHM Converter Trial version, http://www.processtext.com/abcchm.html

Table 17.1: Random access

CONSTANT	WHERE	FILE LOCATION
SEEK_SET	0	File beginning
SEEK_CUR	1	Current file pointer position
SEEK_END	2	End-of-file

After `fseek`, the next operation on an update file can be either input or output.

Program

This program is designed to handle data such at `rollno`, `name` and `marks` of a student. In this program, the following operations are performed:

1. Information on a new student is entered and stored in the `student.txt` file.
2. The `student.txt` file is printed on screen on the operator's request.
3. The `student.txt` file is sorted on the basis of marks and stored in the file `marks.txt`.
4. Information on a student whose `rollno` is given is printed on screen.
5. The average marks of all students are calculated.

```
#include<stdio.h>

 int bubble(int*,int);
 void filewrite();
 void avgmarks();
 void fileprint();
 void filesort();
 void rollin();

/******************* SORTING FUNCTION ************************/
int bubble(int x[],int n)
{
    int hold,j,pass,i,switched = 1;
    for(pass = 0; pass < n-1 && switched == 1;pass++)
    {
        switched=0;
        for (j=0;j<n-pass-1;j++)
               if (x[j]>x[j+1])
               }
                   switched=1;
                   hold = x[j];
                   x[j] = x[j+1];
                   x[j+1]=hold;
               }
    }
    return(0);
}
/*************** FILE WRITING FUNCTION **********************/
```

ABC Amber CHM Converter Trial version, http://www.processtext.com/abcchm.html

```
void filewrite()
{
    int roll,ch,mark;
    char nam[50];
    FILE *fp;
    clrscr();
    fp = fopen("student.txt","a");
    printf("ENTER ROLL NUMBER, NAME, MARKS \n");
    ch =1;
    while(ch)
    {
        scanf("%d%s%d",&roll,&nam,&mark);
        fprintf(fp,"%d %s %d\n",roll,nam,mark);
        printf("\n\n press 1 to continue,0 to stop");
        scanf("%d",&ch);
    }
    fclose(fp) ;
}
/******************* OUTPUTTING DATA ON SCREEN***************/
void fileprint()
{
    int marks[100],rollno[100],x[100],i;
    char name[100][50];
    FILE *fp;

    clrscr();
    fp = fopen("student.txt","r");
    i=0;
    printf("ROLLNO       NAME       MARK\n");
    while(!feof(fp))
    {
        fscanf(fp,"%d %s %d\n",&rollno[i],&name[i],&marks[i]);
        printf(" %d         %s
%d\n",rollno[i],name[i],marks[i]);
        i=i+1;
    }
    fclose(fp);
    printf("\n\n\nPRESS ANY KEY");
    getch();

}
/****************** SORTING FILE ************************/
void filesort()
```

ABC Amber CHM Converter Trial version, http://www.processtext.com/abcchm.html

```
{
    int marks[100],rollno[100],x[100],n,i,j;
   char name[100][50];
   FILE *fp,*fm;

    fp = fopen("student.txt","r");
    fm = fopen("marks.txt","w");
    i=0;
    while(! feof(fp))
    {

        fscanf(fp,"%d %s %d\n",&rollno[i],&name[i],&marks[i]);
        x[i]= marks[i];
        i=i+1;
    }

    n=i;

    bubble(x,n);

    for(i=0;i<n;i++)
    {
        printf(" %d\t",x[i]);
    }

    for(i=0;i<n;i++)
    {
        for (j=0;j<n;j++)
        {
               if(x[i]==marks[j])
               {
                      fprintf(fm,"%d %s
%d\n",rollno[j],name[j],marks[j]);
               }
        }
    }
    fclose(fm);
    fclose(fp);
    printf("\n\n\nPRESS ANY KEY");
    getch();

}
/******************* DATA USING ROLLNO************************/
```

ABC Amber CHM Converter Trial version, http://www.processtext.com/abcchm.html

```
void rollin()
{
    int i,roll,ch,mark,roll1;
    char nam[50];
    FILE *fm;

    ch=1;
    while(ch)
    {
        clrscr();
        fm = fopen("marks.txt","r");
        printf(" \n ENTER ROLL NUMBER - ");
        scanf("%d",&roll1);
        i=0;
        while(! feof(fm))
        {
               fscanf(fm,"%d %s %d\n",&roll,&nam,&mark);
               if(roll1==roll)
               {
                   printf("\nROLLNO. NAME MARKS\n ");
                      printf(" %d       %s
%d\n" ,roll ,nam,mark);
                      break;
               }
               else
                      i=i+1;

        }
        printf(
        "\n\npress 1 to see student info, 0 to return to main menu\n");
        scanf("%d",&ch);
        fclose(fm);
    }
}

void avgmarks()
{
    int marks[100],rollno[100],n,i;
    float avg,x;
   char name[100][50];
   FILE *fm;
   fm = fopen("marks.txt","r");
   i=0;
   while(! feof(fm))
```

ABC Amber CHM Converter Trial version, http://www.processtext.com/abcchm.html

```
   {

       fscanf(fm,"%d %s %d\n",&rollno[i],&name[i],&marks[i]);
       x = x + marks[i];
       i=i+1;
    }
    n = i;
   avg = x/n;
    printf("AVERAGE MARKS OF %d STUDENTS ARE - %f ",n,avg);
    fclose(fm);
    printf("\n\n\nPRESS ANY KEY");
    getch();
}

/**************** FUNC. ENDS************************/
void main()
{
    int marks[100],rollno[100],x[100],n,i,j,roll,c,mark,roll1;
    char name[100][10],nam[50];

    while(c!=6)
    {
        clrscr();
        printf("GIVE CHOICE--\n");
        printf("   1 TO ENTER STUDENT INFO.\n");
        printf("   2 TO SEE STUDENT.TXT FILE\n");
        printf("   3 TO SORT FILE ON BASIS OF MARKS\n");
        printf("   4 TO PRINT STUDENT INFO. USING ROLL NO\n");
        printf("   5 TO FIND AVERAGE OF MARKS\n");
        printf(" 6 TO EXIT\n\n--");
        scanf("%d",&c);
        clrscr();
        switch(c)
        {
        case 1:
               filewrite();
               break;
        case 2:
               fileprint();
               break;
        case 3:
               filesort();
               break;
        case 4:  rollin();
```

ABC Amber CHM Converter Trial version, http://www.processtext.com/abcchm.html

```
                break;
        case 5:  avgmarks();
                break;
        case 6:
                break;
        default:
                break;
        }
    }
}
```

Explanation

1. This program uses the following functions for its specified operation.

`int bubble(int*,int)` –	This bubble sorting technique is used for file sorting.
`void filewrite()` –	Used to write data of a new student in "student.txt" file
`void fileprint()` –	Used to print information on students.
`void filesort()` –	Used to sort the "student.txt" files on mark basis in "marks.txt"
`void rollin()` –	Used to find information on a student using his roll number.
`void avgmarks()` –	Used to find average marks of all students.

2. The `filewrite()` function opens the `student.txt` file in the append mode, and data entered is written in the same file. In the void `fileprint()` file, `student.txt` is opened in read mode and data is read from it. This data is printed on the screen.
3. `filesort()` opens the `student.txt` file in read mode and the file `marks.txt` in write mode. The data of all students is temporarily stored in one buffer consisting of three arrays: one for `rollno`, the second for `name` and the third for `marks`. At the same time, marks are stored in the `x[ ]` array for sorting purposes. The sorting is done by bubble sort. The result of sorting is available in `x[ ]`. At this stage, each `x[ i ]` is compared with marks `[ j ]`. If a match is found, the data on that student is stored in the `marks.txt` file. This process is done for all marks.
4. In this way, we get `a marks.txt` file that is sorted on the basis of `marks`. In the void rollin(), the file `marks.txt` is used to find the student whose roll number (rollno) is given. For every line in the file, the rollno in that file is compared with the rollno to be found. If a match exists in the file, the data on that student is printed on the screen. The `avgmarks()` function uses the file `marks.txt`. Marks of students are added to variable `X`, each time the file pointer is incremented. Then, the average `marks` (sre) is displayed on the screen.
5. In main function, the `switch` statement is used to invoke the function related to the option given by the user.
6. In this program, input consists of the `rollno`, `marks`, and `name` of each student.
7. Output depends on the user's choice. When information on students is to be printed, the program prints the content of the student.txt file on the screen. When information is sought on the basis of the roll number, the program prints the rollno, marks, and name of each student. When the average of marks is found, it prints that.

Previous Next

ABC Amber CHM Converter Trial version, http://www.processtext.com/abcchm.html

DIRECT ACCESS FILES

Introduction

A *direct access file* is a file in which any single component may be accessed at random. Every component has a key value associated with it. A write operation takes a component and its key value, writes the component into the file, and stores both the key and the location of the record in a file, an index. A read operation takes the key of the desired component, searches the index to find the location of the component, and retrieves the component from the file.

Program

A complete C program implementing a direct access file is given below:

```
#include <stdio.h>
#include <string.h>
#include <stdlib.h>
#define MAX 50

typedef struct
{
    char name[10];
    int key;
}   file_record;
/* this function adds the relative address to the index for a key */
void create_index(long index[], int key, long rel_add )
{
    index[key] = rel_add;
}

/* this function writes a record to the file */
void write_rec(FILE *fp, file_record rec)
{
    fwrite(&rec,sizeof(rec),1,fp);
}

void main()
{
    long rel_add;
    int key;
    file_record frec;
    long index[MAX];/* an index list*/
    int n,i;

    FILE *recfile=NULL,*ifile=NULL;
    /* this initializes the index list to all -1 */
```

```
    for(i=0; i< MAX; i++)
        index[i]= (-1);

    recfile=fopen("mfile","w");
    if(recfile == NULL)
    {
        printf("Error in opening file mfile\n");
        exit(0);
    }
    rel_add = 0 ;
    do
    {
        printf(
" Enter the data value and the key of the record to be added to file
mfile\n");
        scanf("%s %d",frec.name,&frec.key);
        while(index[frec.key] != (-1))
        {
              printf(
" A record with this key value already exist in a file enter record key
value\n");
              scanf("%s %d",frec.name,&frec.key);
        }
        create_index(index,frec.key,rel_add);
        write_rec(recfile,frec);
        rel_add = ftell(recfile);
        /* this sets the relative address for the next record to be
       the value of current file position pointer in bytes from
       the beginning of the file */
        printf("Enter 1 to continue adding records to the file\n");
        scanf("%d",&n);
    }while(n == 1);
    ifile=fopen("index_file","w");
    if(ifile == NULL)
    {
        printf("Error in opening file index_file\n");
        exit(0);
    }
    fwrite(index,sizeof(index),1,ifile);/*writes the complete index into the
index_file */
    fclose(recfile);
    fclose(ifile);
    printf("Enter 1 if you want to retrieve a record\n");
    scanf("%d",&n);
```

```
    if( n == 1)
    {
        ifile=fopen("index_file","r");
               if(ifile == NULL)
               {
                      printf("Error in opening file index_file\n");
                      exit(0);
               }
               fread(index,sizeof(index),1,ifile);
               /*reads the complete index into the index list from the
        index_file*/
               fclose(ifile);
          recfile=fopen("mfile","r");
          if(recfile == NULL)
               {
                      printf("Error in opening file mfile\n");
                      exit(0);
               }
    }
    printf("THE CONTENTS OF FILE IS \n");
    while( (fread(&frec,sizeof(frec),1,recfile)) != 0)
    printf("%s %d\n",frec.name,frec.key);
    do
    {
        printf("Enter the key of the record to be retrieved\n");
        scanf("%d",&key);
        rel_add = index[key]; /* gets the relative address of the record from
index list */
        if( (fseek(recfile,rel_add,SEEK_SET))!= 0)
        {
               printf("Error\n");
               exit(0);
        }
        fread(&frec,sizeof(frec),1,recfile);
        printf("The data value of the retrieved record is %s\n",
        frec.name);
        printf("Enter 1 if you want to retrieve a record\n");
        scanf("%d",&n);
    } while(n == 1);
    fclose(recfile);
}
```

Explanation

1. This program writes the names in the file. A unique integer value is assigned to every name as a key value.

2. The program takes the name to be stored in the file along with its key value, writes the name and key value in the file, obtains the relative address of that record, and stores it in a list called an index. The index is organized by key value.
3. When the addition process ends, it writes the complete index into an index file.
4. When retrieval of names is requested, the following occurs:
   A. The complete index is loaded into a list index from the index file.
   B. The index file is used to find the relative address of the record whose key value is given.
   C. The current position pointer is moved to that address.
   D. The record is read from the file.

Example

Input and Output

1.
Enter the data value and the key of the record to be added to file `mfile`
`logk 10`
Enter 1 to continue adding records to the file
1
Enter the data value and the key of the record to be added to file `mfile`
`psd 20`
Enter 1 to continue adding records to the file
1
Enter the data value and the key of the record to be added to file `mfile`
`apg 3`
Enter 1 to continue adding records to the file
1
Enter the data value and the key of the record to be added to file `mfile`
`agk 5`
Enter 1 to continue adding records to the file
1
Enter the data value and the key of the record to be added to file `mfile`
`kdk 34`
Enter 1 to continue adding records to the file
0
Enter 1 if you want to retrieve a record
1
THE CONTENTS OF FILE IS

- `logk 10`
- `psd 20`
- `apg 3`
- `agk 5`
- `kdk 34`

Enter the key of the record to be retrieved
5
The data value of the retrieved record is `agk`
Enter 1 if you want to retrieve a record
1
Enter the key of the record to be retrieved
10
The data value of the retrieved record is `logk`
Enter 1 if you want to retrieve a record
1
Enter the key of the record to be retrieved

34
The data value of the retrieved record is `kdk`
Enter 1 if you want to retrieve a record
1
Enter the key of the record to be retrieved
20
The data value of the retrieved record is `psd`
Enter 1 if you want to retrieve a record
1
Enter the key of the record to be retrieved
10
The data value of the retrieved record is `logk`
Enter 1 if you want to retrieve a record
0
2.
Enter the data value and the key of the record to be added to file `mfile`
`logk 10`
Enter 1 to continue adding records to the file
1
Enter the data value and the key of the record to be added to file `mfile`
`psd 20`
Enter 1 to continue adding records to the file
1
Enter the data value and the key of the record to be added to file `mfile`
`kdk 20`
A record with this key value already exist in a file enter record key value
`kdk 30`
Enter 1 to continue adding records to the file
1
Enter the data value and the key of the record to be added to file `mfile`
`asg 10`
A record with this key value already exists in a file, enter record key value
`asg 15`
Enter 1 to continue adding records to the file
0
Enter 1 if you want to retrieve a record
1
THE CONTENTS OF FILE IS

- `logk 10`
- `psd 20`
- `kdk 30`
- `asg 15`

Enter the key of the record to be retrieved
20
The data value of the retrieved record is `psd`
Enter 1 if you want to retrieve a record
1
Enter the key of the record to be retrieved
15
The data value of the retrieved record is `asg`
Enter 1 if you want to retrieve a record
1
Enter the key of the record to be retrieved
10
The data value of the retrieved record is `logk`

Enter 1 if you want to retrieve a record
1
Enter the key of the record to be retrieved
30
The data value of the retrieved record is `kdk`
Enter 1 if you want to retrieve a record
0

Indexed Sequential Files

An indexed sequential file is like a direct access file with the additional facility of accessing the components in a sequential manner, beginning from the position of the component selected at random. This requires the index to be ordered by key values.

Exercises

1. Write a C program to implement a telephone directory. Your program should provide for retrieval of an arbitrary record, given the name of the telephone subscriber.
2. Write a C program to implement a database of people. Your program should provide for retrieval of information from any arbitrary record, given the code number of the person.

Previous Next

ABC Amber CHM Converter Trial version, http://www.processtext.com/abcchm.html

Part II: Data Structures

Chapter 18: Arrays, Searching, and Sorting

Chapter 19: Stacks and Queues

Chapter 20: Linked Lists

Chapter 21: Trees

Chapter 22: Graphs

ABC Amber CHM Converter Trial version, http://www.processtext.com/abcchm.html

Chapter 18: Arrays, Searching, and Sorting

ARRAYS

Introduction

An *array* is a fixed-sized, homogeneous, and widely-used data structure. By homogeneous, we mean that it consists of components which are all of the same type, called *element type* or *base type*. And by fixed sized, we mean that the number of components is constant, and so does not change during the lifetime of the structure. An array is also called a *random-access data structure*, because all components can be selected at random and are equally accessible. An array can be used to structure several data objects in the programming languages. A component of an array is selected by giving its *subscript*, which is an integer indicating the position of the component in the sequence. Therefore, an array is made of the pairs (value, index); it means that with every index, a value is associated. If every index is one single value then it is called a one-dimensional array, whereas if every index is a *n*-tuple $\{i_1, i_2, i_3, \ldots, in\}$, the array is called a *n* -dimensional array.

Memory Representation

An array is represented in memory by using a sequential mapping. The basic characteristic of the sequential mapping is that every element is at a fixed distance apart. Therefore, if the ith element is mapped into a location having an address a, then the $(i + 1)^{th}$ element is mapped into the memory location having an address (a + 1), as shown in Figure 18.1.

ABC Amber CHM Converter Trial version, http://www.processtext.com/abcchm.html

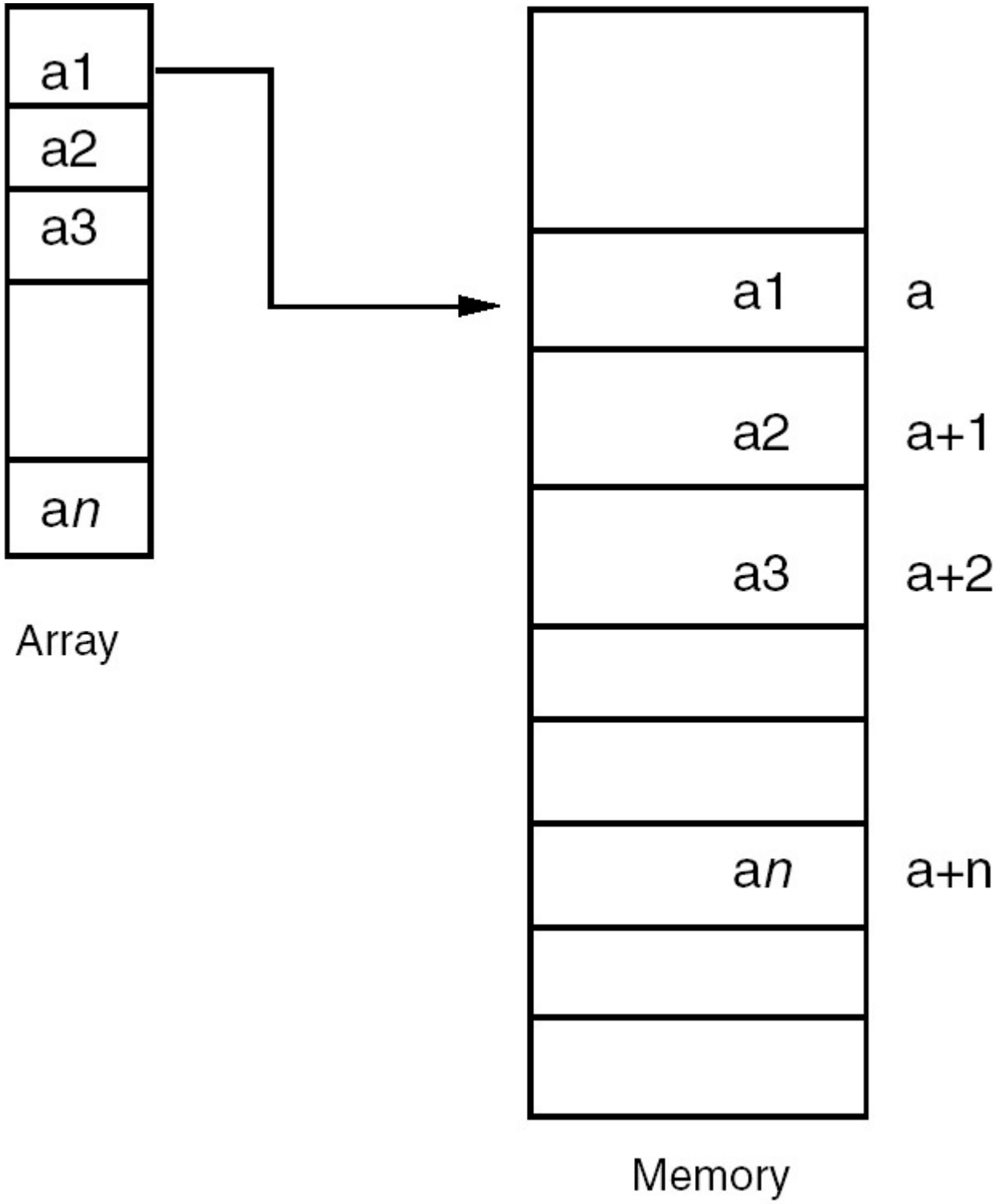

Figure 18.1: Representation of an array.

The address of the first element of an array is called the base address, so the address of the the ith element is

Base address + offset of the ith element from base address

where the offset is computed as:

Offset of the ith element = number of elements before the ith *

size of each element.

If LB is the lower bound, then the offset computation becomes:

offset = (i – LB) * size.

Representation of Two-Dimensional Array

A two-dimensional array can be considered as a one-dimensional array whose elements are also one-dimensional arrays. So, we can view a two dimensional array as one single column of rows and map it sequentially as shown in Figure 18.2. Such a representation is called a *row-major representation*.

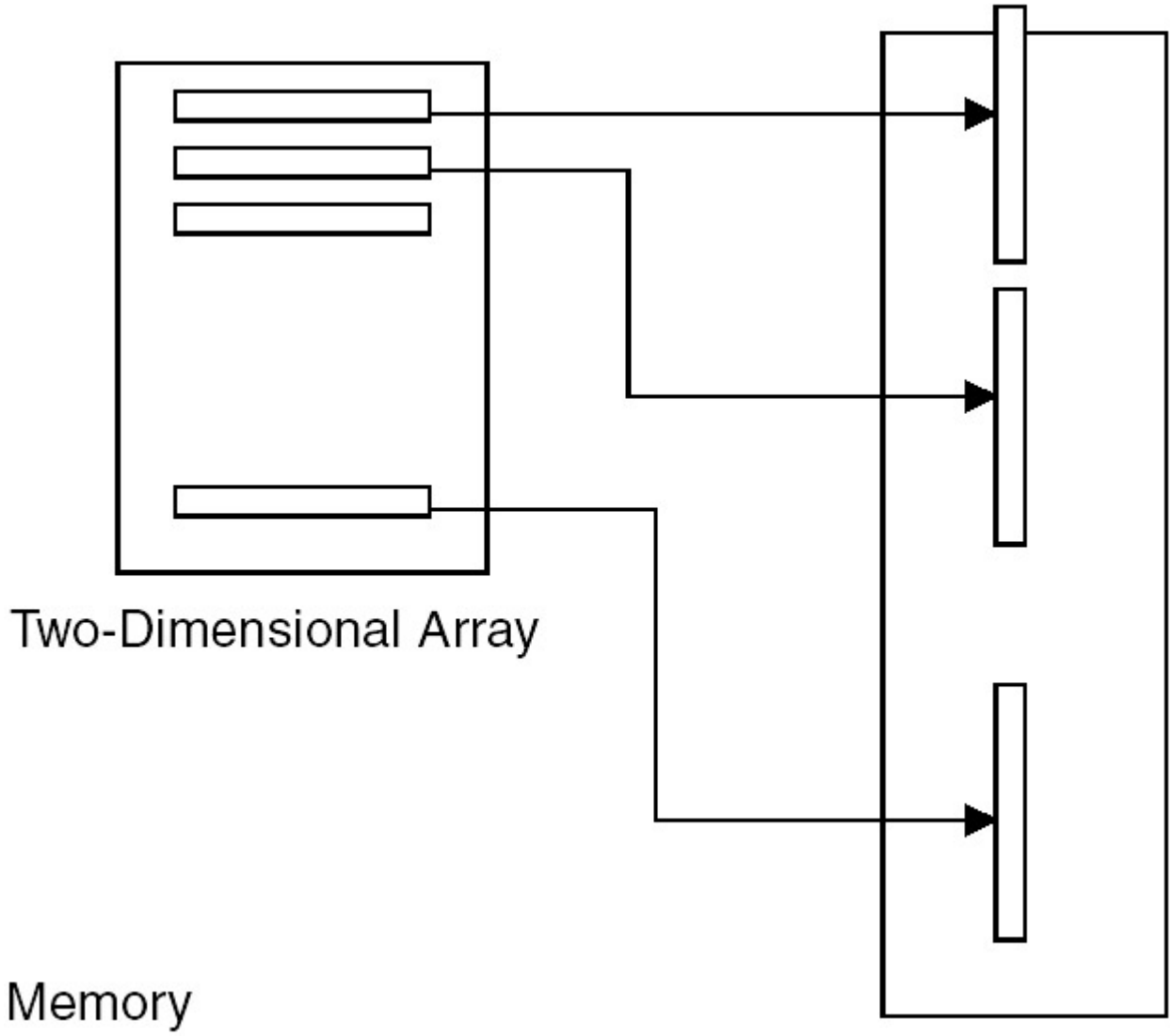

Figure 18.2: Row-major representation of a two-dimensional array.

The address of the element of the ith row and the jth column therefore is:

addr(a[i, j]) = (number of rows placed before i^{th} row * size of a row) + (number of elements placed before the jth element in the ith row * size of element)

where

Number of rows placed before i^{th} row = (i – LB1), and LB1 is the lower bound of the first dimension.

Size of a row = number of elements in a row * a size of element.

Number of elements in a row = (UB2 – LB2+1), where UB2 and LB2 are the upper and lower bounds of the second dimension, respectively.

Therefore:

addr(a[i, j]) = ((i – LB1) * (UB2 – LB2+1) * size) + ((j – LB2)*size)

It is also possible to view a two-dimensional array as one single row of columns and map it sequentially as shown in Figure 18.3. Such a representation is called a *column-major representation*.

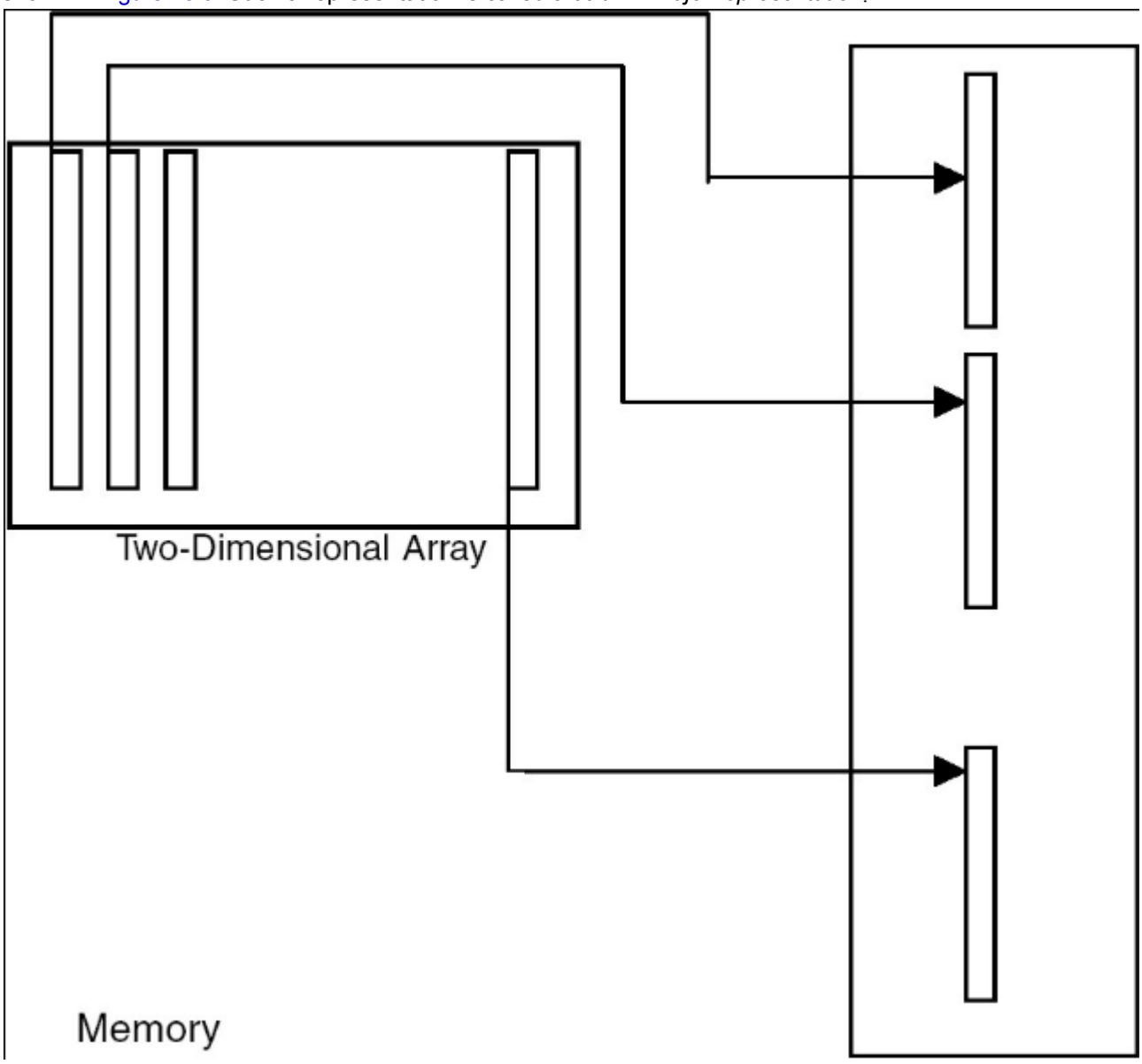

Figure 18.3: Column major representation of a two-dimensional array.

The address of the element of the ith row and the jth column therefore is:

addr(a[i, j]) = (number of columns placed before j^{th} column * size of a column) + (number of elements placed before the ith element in the jth column * size of each element)

Number of columns placed before j^{th} column = (j – LB2) where LB2 is the lower bound of the second dimension.

Size of a column = number of elements in a column * size of element Number of elements in a column = (UB1 – LB1 + 1), where UB1 and LB1 are the upper and lower bounds of the first dimension, respectively.

Therefore:

addr(a[i, j]) = ((j – LB2) * (UB1 – LB1+1) * size) + ((i – LB1)*size)

Previous Next

ABC Amber CHM Converter Trial version, http://www.processtext.com/abcchm.html

ABC Amber CHM Converter Trial version, http://www.processtext.com/abcchm.html

APPLICATION OF ARRAYS

Whenever we require a collection of data objects of the same type and want to process them as a single unit, an array can be used, provided the number of data items is constant or fixed. Arrays have a wide range of applications ranging from business data processing to scientific calculations to industrial projects.

Implementation of a Static Contiguous List

A *list* is a structure in which insertions, deletions, and retrieval may occur at any position in the list. Therefore, when the list is static, it can be implemented by using an array. When a list is implemented or realized by using an array, it is a *contiguous list*. By contiguous, we mean that the elements are placed consecutively one after another starting from some address, called the *base address*. The advantage of a list implemented using an array is that it is randomly accessible. The disadvantage of such a list is that insertions and deletions require moving of the entries, and so it is costlier. A static list can be implemented using an array by mapping the ith element of the list into the ith entry of the array, as shown in Figure 18.4.

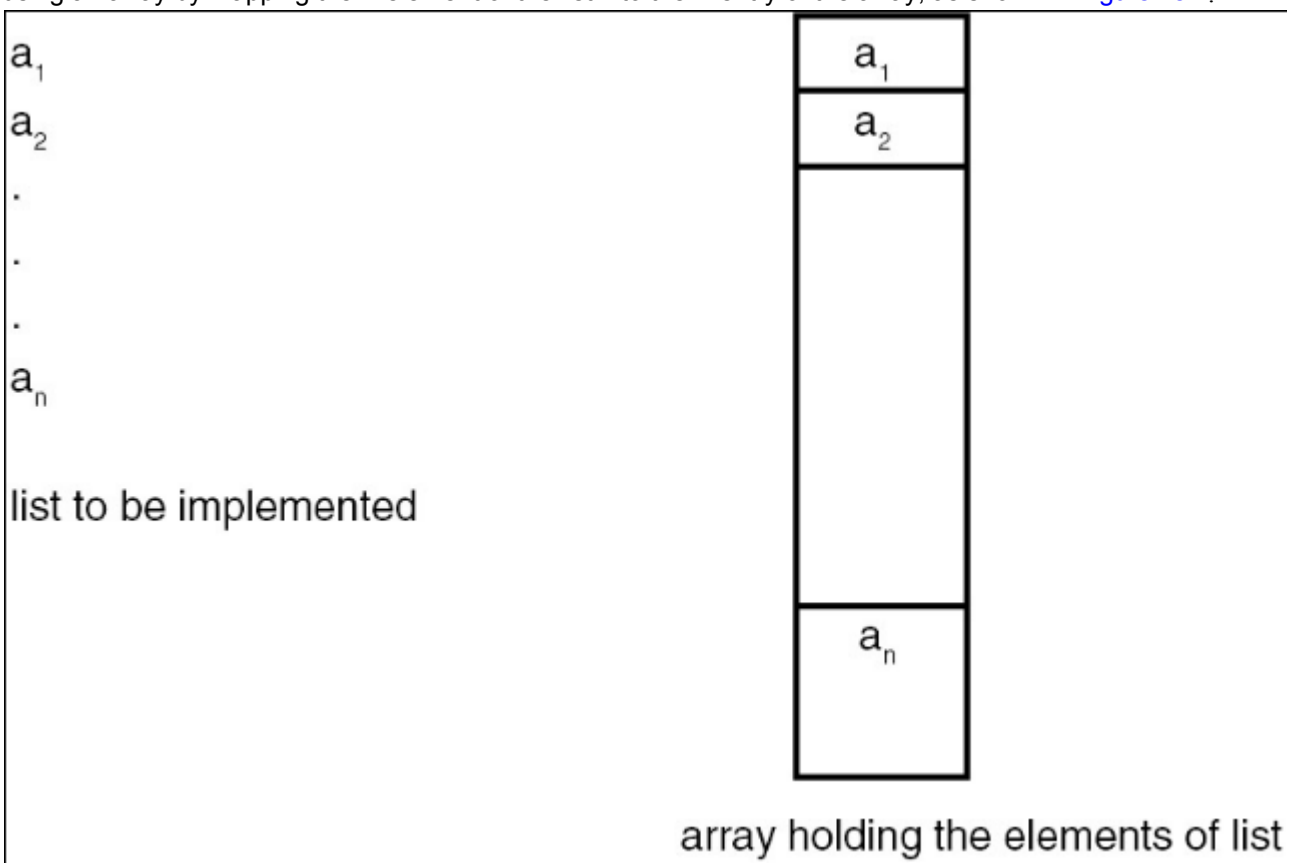

Figure 18.4: Implementation of a static contiguous list.

Program

A complete C program for implementing a list with operations for reading values of the elements of the list and displaying them is given here:

```
#include<stdio.h>
#include<conio.h>
void main()
{
   void read(int *,int);
   void dis(int *,int);
```

```
   int a[5],i,sum=0;

   clrscr();
   printf("Enter the elements of array \n");
   read(a,5);       /*read the array*/
   printf("The array elements are \n");
   dis(a,5);
}

void read(int c[],int i)
{
   int j;
   for(j=0;j<i;j++)
   scanf("%d",&c[j]);
   fflush(stdin);
}

void dis(int d[],int i)
{
   int j;
   for(j=0;j<i;j++)
      printf("%d ",d[j]);
   printf("\n");
}
```

Example

Input

Enter the elements of the first array

```
15
30
45
60
75
```

Output

The elements of the first array are

```
15 30 45 60 75
```

Previous Next

ABC Amber CHM Converter Trial version, http://www.processtext.com/abcchm.html

MANIPULATIONS ON THE LIST IMPLEMENTED USING AN ARRAY

Introduction

Shown next are C programs for carrying out manipulations such as finding the sum of elements of an array, adding two arrays, and reversing an array.

Program

```
ADDITION OF THE ELEMENTS OF THE LIST
#include<stdio.h>
#include<conio.h>
void main()
{
   void read(int *,int);
   void dis(int *,int);
   int a[5],i,sum=0;

   clrscr();
   printf("Enter the elements of list \n");
   read(a,5);        /*read the list*/
   printf("The list elements are \n");
   dis(a,5);
   for(i=0;i<5;i++)
   {
      sum+=a[i];
   }
   printf("The sum of the elements of the list is %d\n",sum);
   getch();
}

void read(int c[],int i)
{
   int j;
   for(j=0;j<i;j++)
   scanf("%d",&c[j]);
   fflush(stdin);
}

void dis(int d[],int i)
{
   int j;
   for(j=0;j<i;j++)
   printf("%d ",d[j]);
```

```
   printf("\n");
}
```

Example

Input

Enter the elements of the first array

```
15
30
45
60
75
```

Output

The elements of the first array are

```
15 30 45 60 75
```

The sum of the elements of an array is 225.

Addition of the two lists

Suppose the first list is

```
1
2
3
4
5
```

and the second list is

```
5
6
8
9
10
```

The first element of first list is added to the first element of the second list, and the result of the addition is the first element of the third list.

In this example, 5 is added to 1, and the first element of third list is 6.

This step is repeated for all the elements of the lists and the resultant list after the addition is

```
6
8
11
13
```

ABC Amber CHM Converter Trial version, http://www.processtext.com/abcchm.html

15

```
#include<stdio.h>
   #include<conio.h>
   void main()
   {
    void read(int *,int);
    void dis(int *,int);
    void add(int *,int *,int * ,int);
    int a[5],b[5],c[5],i;

    clrscr();
    printf("Enter the elements of first list \n");
    read(a,5);       /*read the first list*/
    printf("The elements of first list are \n");
    dis(a,5);  /*Display the first list*/
    printf("Enter the elements of second list \n");
    read(b,5);      /*read the second list*/
    printf("The elements of second list are \n");
    dis(b,5);  /*Display the second list*/
    add(a,b,c,i);
    printf("The resultant list is \n");
    dis(c,5);
    getch();
   }

   void add(int a[],int b[],int c[],int i)
   {
    for(i=0;i<5;i++)
      {
       c[i]=a[i]+b[i];
      }
   }
   void read(int c[],int i)
   {
    int j;
    for(j=0;j<i;j++)
    scanf("%d",&c[j]);
    fflush(stdin);
   }

   void dis(int d[],int i)
   {
    int j;
```

```
    for(j=0;j<i;j++)
    printf("%d ",d[j]);
    printf("\n");
   }
```

Explanation

1. Repeat step (2) for `i=0,1,2,... (n-1)`, where `n` is the maximum number of elements in a list.
2. `c[i] = a[i]+b[i]`, where `a` is the first list, `b` is the second list, and `c` is the resultant list; `a[i]` denotes the ith element of list `a`.

Example

Input

Enter the elements of the first list

```
1
2
3
4
5
```

Output

The elements of the first list are

```
2 3 4 5
```

Input

Enter the elements of the second list

```
6
7
8
9
10
```

Output

The elements of the second list are

```
6 7 8 9 10
```

The resultant list is

```
7 9 11 13 15
```

Inverse of the list

The following program makes a reverse version of the list.

```
#include<stdio.h>
```

ABC Amber CHM Converter Trial version, http://www.processtext.com/abcchm.html

```
#include<conio.h>
void main()
{
   void read(int *,int);
   void   dis(int *,int);
   void  inverse(int *,int);

   int a[5],i;
   clrscr();
   read(a,5);
   dis(a,5);
   inverse(a,5);
   dis(a,5);
   getch();
}

void read(int c[],int i)
{
   int j;
   printf("Enter the list \n");
   for(j=0;j<i;j++)
      scanf("%d",&c[j]);
   fflush(stdin);
}
void dis(int d[],int i)
{
    int j;
   printf("The list is \n");
   for(j=0;j<i;j++)
   printf("%d ",d[j]);
   printf("\n");
}
void inverse(int inver_a[],int j)
{
   int i,temp;
   j-;
   for(i=0;i<(j/2);i++)
   {
      temp=inver_a[i];
      inver_a[i]=inver_a[j];
      inver_a[j]=temp;
      j-;
   }
}
```

Example

Input

Enter the list

```
10
20
30
40
50
```

Output

The list is

```
10 20 30 40 50
```

The inverse of the list is

```
50 40 30 20 10
```

This is another version of an inverse program, in which another list is used to hold the reversed list.

```
#include<stdio.h>
#include<conio.h>
void main()
{
   void read(int *,int);
   void dis(int *,int);
   void inverse(int *,int *,int);
   int a[5],b[5];
   clrscr();
   read(a,5);
   dis(a,5);
   inverse(a,b,5);
   dis(b,5);
   getch();
}

void read(int c[],int i)
{
   int j;
   printf("Enter the list \n");
   for(j=0;j<i;j++)
      scanf("%d",&c[j]);
   fflush(stdin);
```

ABC Amber CHM Converter Trial version, http://www.processtext.com/abcchm.html

```
}
void dis(int d[],int i)
{
   int j;
   printf("The list is \n");
   for(j=0;j<i;j++)
      printf("%d ",d[j]);
   printf("\n");
}
void inverse(int a[],int inverse_b[],int j)
{
   int i,k;
   k=j-1;
   for(i=0;i<j;i++)
   {
      inverse_b[i]=a[k];
      k-;
   }
}
```

Example

Input

Enter the list

```
10
20
30
40
50
```

Output

The list is

```
10 20 30 40 50
```

The inverse of the list is

```
50 40 30 20 10
```

Previous Next

ABC Amber CHM Converter Trial version, http://www.processtext.com/abcchm.html

MERGING OF TWO SORTED LISTS

Introduction

Assume that two lists to be merged are sorted in descending order. Compare the first element of the first list with the first element of the second list. If the element of the first list is greater, then place it in the resultant list. Advance the index of the first list and the index of the resultant list so that they will point to the next term. If the element of the first list is smaller, place the element of the second list in the resultant list. Advance the index of the second list and the index of the resultant list so that they will point to the next term.

Repeat this process until all the elements of either the first list or the second list are compared. If some elements remain to be compared in the first list or in the second list, place those elements in the resultant list and advance the corresponding index of that list and the index of the resultant list.

Suppose the first list is 10 20 25 50 63, and the second list is 12 16 62 68 80. The sorted lists are 63 50 25 20 10 and 80 68 62 16 12.

The first element of the first list is 63, which is smaller than 80, so the first element of the resultant list is 80. Now, 63 is compared with 68; again it is smaller, so the second element in the resultant list is 68. Next, 63 is compared with 50. In this case it is greater, so the third element of the resultant list is 63.

Repeat this process for all the elements of the first list and the second list. The resultant list is 80 68 63 62 50 25 20 16 12 10.

Program

```
#include<stdio.h>
#include<conio.h>
void main()
{
   void read(int *,int);
   void dis(int *,int);
   void sort(int *,int);
   void merge(int *,int *,int *,int);
   int a[5],b[5],c[10];
   clrscr();
   printf("Enter the elements of first list \n");
   read(a,5);      /*read the list*/
   printf("The elements of first list are \n");
   dis(a,5);  /*Display the first list*/
   printf("Enter the elements of second list \n");
   read(b,5);   /*read the list*/
   printf("The elements of second list are \n");
   dis(b,5);  /*Display the second list*/
   sort(a,5);
   printf("The sorted list a is:\n");
   dis(a,5);
   sort(b,5);
   printf("The sorted list b is:\n");
```

ABC Amber CHM Converter Trial version, http://www.processtext.com/abcchm.html

```
   dis(b,5);

   merge(a,b,c,5);
   printf("The elements of merged list are \n");
   dis(c,10);  /*Display the merged list*/
   getch();
}
void read(int c[],int i)
{
   int j;
   for(j=0;j<i;j++)
      scanf("%d",&c[j]);
   fflush(stdin);
}

void dis(int d[],int i)
{
   int j;
   for(j=0;j<i;j++)
      printf("%d ",d[j]);
   printf("\n");
}
void sort(int arr[] ,int k)
{
   int temp;
   int i,j;
   for(i=0;i<k;i++)
   {
      for(j=0;j<k-i-1;j++)
      {
         if(arr[j]<arr[j+1])
         {
            temp=arr[j];
            arr[j]=arr[j+1];
            arr[j+1]=temp;
         }
      }
   }
}
void merge(int a[],int b[],int c[],int k)
{
   int ptra=0,ptrb=0,ptrc=0;
   while(ptra<k && ptrb<k)
   {
```

```
      if(a[ptra] < b[ptrb])
      {
            c[ptrc]=a[ptra];
         ptra++;
      }
      else
      {
            c[ptrc]=b[ptrb];
         ptrb++;
      }
      ptrc++;
   }
   while(ptra<k)
   {
      c[ptrc]=a[ptra];
      ptra++;ptrc++;
   }
   while(ptrb<k)
   {
      c[ptrc]=b[ptrb];
      ptrb++;  ptrc++;
   }
}
```

Example

Input

Enter the elements of the first list

```
10 20 25 50 63
```

Output

The elements of first list are

```
20 25 50 63
```

Input

Enter the elements of the second list

```
16 62 68 80
```

Output

The elements of second list are

```
12 16 62 68 80
```

ABC Amber CHM Converter Trial version, http://www.processtext.com/abcchm.html

The sorted list `a` is

```
63 50 25 20 10
```

The sorted list `b` is

```
80 68 62 16 12
```

The elements of the merged list are

```
80 68 63 62 50 25 20 16 12 10
```

Explanation

1. `ptra=0, ptrb=0, ptrc=0;`
2. If the element in the first list pointed to by `ptra` is greater than the element in the second list pointed to by `ptrb`, place the element of the first list in the resultant list at the index equal to `ptrc`. Increment `ptra` or `ptrc` by one, or else place the element of the second list in the resultant list at the index equal to `ptrc`. Increment `ptrb` and `ptrc` by 1. Repeat this step until `ptra` is greater than the number of terms in the first list and `ptrb` is greater than the number of terms in the second list.
3. If the first list has any elements, place one in the resultant list pointed to by `ptrc`, and increment `ptra` and `ptrc`. Repeat this step until `ptra` is greater than the number of terms in the first list.
4. If the second list has any elements, place one in the resultant list pointed to by `ptrc`, and increment `ptrb` and `ptrc`. Repeat this step until `ptrb` is greater than the number of terms in the first list.

Previous Next

ABC Amber CHM Converter Trial version, http://www.processtext.com/abcchm.html

TRANSPOSE OF A MATRIX

Introduction

The *transpose* of a matrix is obtained by interchanging the rows with the corresponding columns. Let matrix `a` be

```
12 13 14
15 16 17
18 19 11
```

The diagonal elements are the same both in matrix `a` and in the matrix obtained by transposing `a`. In this example, in the 0th row, interchange 13 with 15 and 14 with 18. After interchanging, the matrix becomes

```
12 15 18
13 16 17
14 19 11
```

In the first row, interchange the element that has not yet been interchanged in the 0th row; 17 with 19. After interchanging the elements, the matrix becomes:

```
12 15 18
13 16 19
11 17 11
```

In the next iteration, search for the nondiagonal un-swapped element. In this example, no such element is there, so the result of transposing matrix `a` is

```
12 15 18
13 16 19
14 19 11
```

Program

```
#include<stdio.h>
#include<conio.h>
#define ROW 3
#define COL 3

void main()
{
   void read(int a[][COL],int,int);
   void dis(int a[][COL],int,int);
   void trans(int a[][COL],int,int);
   int a[3][3];
   clrscr();
```

ABC Amber CHM Converter Trial version, http://www.processtext.com/abcchm.html

```
   read(a,ROW,COL);
   printf("\nThe matrix is \n");
   dis(a,ROW,COL);
   trans(a,ROW,COL);
   printf("The tranpose of the matrix is\n");
   dis(a,ROW,COL);
   getch();
}
void read(int c[3][3] ,int i ,int k)
{
    int j,l;
   printf("Enter the array \n");
   for(j=0;j<i;j++)
      for(l=0;l<k;l++)
             scanf("%d",&c[j][l]);
   fflush(stdin);
}
void dis(int d[3][3 ],int i,int k)
{
   int j,l;
   for(j=0;j<i;j++)
   {
      for(l=0;l<k;l++)
             printf("%d ",d[j][l]);
      printf("\n");
   }
}
void trans(int mat[][3],int k ,int l)
{
   int i,j,temp;
   for(i=0;i<k;i++)
       for(j=i+1;j<l;j++)
      {
         temp=mat[i][j];
         mat[i][j]=mat[j][i];
         mat[j][i]=temp;
      }
}
```

Explanation

Basic steps:

1. Repeat step (2) for `i=0,1,2, ..... (k-1 )` where `k` is the number of rows in the matrix.
2. Repeat step (3–5) for `j=(i+1),(i+2).....{l-1)` where `l` is the number of columns in the matrix .

3. `temp = mat[i][j]`
4. `mat[i][j] = mat[j][i]`
5. `mat[j][i] = temp`

Example

Input

Enter the array

```
12
13
14
15
16
17
18
19
11
```

Output

The matrix is

```
12 13 14
15 16 17
18 19 11
```

The transpose of the matrix is

```
12 15 18
13 16 19
14 17 11
```

Alternative Version of the Program

This is another version of the transpose program. Here a separate matrix is used to hold the result of transposition.

```
#include<stdio.h>
#include<conio.h>
#define ROW 3 #define COL 3
void main() {
   void read(int a[][COL],int,int);
   void dis(int a[][COL],int,int);
   void trans(int a[][COL],int b[][COL],int,int);
   int a[3][3],b[3][3],i,j;
   clrscr();
   read(a,ROW,COL);
   printf("\nThe matrix is \n");
```

ABC Amber CHM Converter Trial version, http://www.processtext.com/abcchm.html

```
   dis(a,ROW,COL);
   trans(a,b,ROW,COL);
   printf("The tranpose of the matrix is\n");
   dis(b,ROW,COL);
   getch();
}
void read(int c[3][3] ,int i ,int k)
{
   int j,l;
   printf("Enter the array \n");
   for(j=0;j<i;j++)
       for(l=0;l<k;l++)
              scanf("%d",&c[j][l]);
   fflush(stdin);
}
void dis(int d[3][3 ],int i,int k)
{
   int j,l;
   for(j=0;j<i;j++)
   {
      for(l=0;l<k;l++)
            printf("%d ",d[j][l]);
      printf("\n");
   }
}
void trans(int mat[][3],int tr_mat[][3], int k ,int l)
{
   int i,j;
   for(i=0;i<k;i++)
   for(j=0;j<l;j++)
   {
          tr_mat[i][j]=mat[j][i];
   }
}
```

Example

Input

Enter the array 1

```
2
3
4
5
```

```
6
7
8
9
```

Output

The matrix is

```
1 2 3
4 5 6
7 8 9
```

The transpose of the matrix is

```
1 4 7
2 5 8
3 6 9
```

Previous Next

ABC Amber CHM Converter Trial version, http://www.processtext.com/abcchm.html

FINDING THE SADDLE POINT OF A MATRIX

Introduction

A matrix `a` is said to have a *saddle point* if some entry `a[I][j]` is the smallest value in the `i`th row and the largest value in the `j`th column. A matrix may have more than one saddle point.

Program

```
#include<stdio.h>
#include<conio.h>
#define ROW 3
#define COL 3

void main()
{
   void read(int a[][COL],int,int);
   void dis(int a[][COL],int,int);
   int sadd_pt(int a[][COL],int,int,int *,int*);
   int i,a[3][3],m=0,n=0;
   clrscr();
   read(a,ROW,COL);
   printf("\nThe matrix is \n");
   dis(a,ROW,COL);
   i=sadd_pt(a,3,3,&m,&n);
   printf("The saddle point is %d &its position is row : %d col :
%d\n",
      i,m+1,n+1);
   getch();
}
void read(int c[][3] ,int i ,int k)
{
    int j,l;
   printf("Enter the array \n");
   for(j=0;j<i;j++)
       for(l=0;l<k;l++)
              scanf("%d",&c[j][l]);
   fflush(stdin);
}
void dis(int d[][3],int i,int k)
{
   int j,l;
   for(j=0;j<i;j++)
   {
```

```
      for(l=0;l<k;l++)
            printf("\t%d",d[j][l]);
      printf("\n");
   }
}
int sadd_pt(int mat[][3],int k ,int l,int *row,int *col)
{
   int min=32767,i=0,j,m,n,p=0;
   while(i<k)
   {
      min=32767;
      m=i;
      p=0;
      for(j=0;j<l;j++)
      {
         if(mat[i][j]<min)
         {
            min=mat[i][j];
            n=j;
         }
      }
      for(j=0;j<k;j++)
             if(min>=mat[j][n])
                    p++;

      if(p==3)
      {
            *row=m;
            *col=n;
            return(min);
      }
      i++;
   }
   printf("No saddle point exists\n");
   getch();
   exit(0);
}
```

Example

Input

Enter the array

```
20 30 40
```

```
56 78 45
1 2 3
```

Output

The matrix is

```
20 30 40
56 78 45
1 2 3
```

The saddle point is 45 and its position is row 2, column 3.

Previous Next

ABC Amber CHM Converter Trial version, http://www.processtext.com/abcchm.html

IMPLEMENTATION OF HEAPS

A *heap* is a list with the following attributes:

- Each entry contains a key.
- For all positions `k` in the list, the key at position `k` is least as large as the keys in positions `2k` and `2k+1`, provided these positions exist in the list. Therefore, an array can be used to implement a heap as shown in Figure 18.5.

1	97
2	58
3	75
4	53
5	42
6	53
7	48
8	32
9	20

Figure 18.5: A heap.

A heap is definitely not an ordered list because the first entry in the heap has the largest key, and there is no necessary ordering between the keys in locations `k` and `k+1`, if `k` > 1.

A heap is used in sorting a continuous list of length n in $O(n \log_2(n))$ comparisons and movements of entries, even in the worst case. The corresponding sorting method is called *heapsort*.

ABC Amber CHM Converter Trial version, http://www.processtext.com/abcchm.html

SORTING AND SEARCHING

We encounter several applications that require an ordered list. So it is required to order the elements of a given list either in ascending/increasing order or decending/decreasing order, as per the requirement. This process is called sorting. There are many techniques available for sorting an array-based list. These techniques differ in their time and space complexities. Some of the important sorting techniques are discussed here.

Previous Next

ABC Amber CHM Converter Trial version, http://www.processtext.com/abcchm.html

BUBBLE SORT

Introduction

Bubble sorting is a simple sorting technique in which we arrange the elements of the list by forming pairs of adjacent elements. That means we form the pair of the ith and $(i+1)^{th}$ element. If the order is ascending, we interchange the elements of the pair if the first element of the pair is greater than the second element. That means for every pair (list[i],list[i+1]) for i :=1 to (n–1) if list[i] > list[i+1], we need to interchange list[i] and list[i+1]. Carrying this out once will move the element with the highest value to the last or n^{th} position. Therefore, we repeat this process the next time with the elements from the first to $(n-1)th$ positions. This will bring the highest value from among the remaining $(n-1)$ values to the $(n-1)^{th}$ position. We repeat the process with the remaining $(n-2)$ values and so on. Finally, we arrange the elements in ascending order. This requires to perform $(n-1)$ passes. In the first pass we have $(n-1)$ pairs, in the second pass we have $(n-2)$ pairs, and in the last (or $(n-1)^{th}$) pass, we have only one pair. Therefore, the number of probes or comparisons that are required to be carried out is

$$(n-1) + (n-2) + (n-3) + \ldots + 1$$
$$= n(n-1)/2,$$

and the order of the algorithm is $O(n^2)$.

Program

```
#include <stdio.h>
#define MAX 10
void swap(int *x,int *y)
{
   int temp;
   temp = *x;
   *x = *y;
   *y = temp;
}
void bsort(int list[], int n)
{
   int i,j;
   for(i=0;i<(n-1);i++)
      for(j=0;j<(n-(i+1));j++)
             if(list[j] > list[j+1])
                    swap(&list[j],&list[j+1]);
}
void readlist(int list[],int n)
{
   int i;
   printf("Enter the elements\n");
   for(i=0;i<n;i++)
       scanf("%d",&list[i]);
}
```

ABC Amber CHM Converter Trial version, http://www.processtext.com/abcchm.html

```
void printlist(int list[],int n)
{
   int i;
   printf("The elements of the list are: \n");
   for(i=0;i<n;i++)
      printf("%d\t",list[i]);
}

void main()
{
   int list[MAX], n;
   printf("Enter the number of elements in the list max = 10\n");
   scanf("%d",&n);
   readlist(list,n);
   printf("The list before sorting is:\n");
   printlist(list,n);
   bsort(list,n);
   printf("The list after sorting is:\n");
   printlist(list,n);
}
```

Example

Input

Enter the number of elements in the list, max = 10

```
5
```

Enter the elements

```
23
5
4
9
1
```

Output

The list before sorting is:

The elements of the list are:

```
23 5 4 9 1
```

The list after sorting is:

The elements of the list are:

ABC Amber CHM Converter Trial version, http://www.processtext.com/abcchm.html

ABC Amber CHM Converter Trial version, http://www.processtext.com/abcchm.html

QUICK SORT

Introduction

In the *quick sort* method, an array a[1],…..,a[n] is sorted by selecting some value in the array as a key element. We then swap the first element of the list with the key element so that the key will be in the first position. We then determine the key's proper place in the list. The proper place for the key is one in which all elements to the left of the key are smaller than the key, and all elements to the right are larger.

To obtain the key's proper position, we traverse the list in both directions using the indices `i` and `j`, respectively. We initialize `i` to that index that is one more than the index of the key element. That is, if the list to be sorted has the indices running from *m* to *n*, the key element is at index m, hence we initialize i to (m+1). The index i is incremented until we get an element at the ith position that is greater than the key value. Similarly, we initialize j to n and go on decrementing j until we get an element with a value less than the key's value.

We then check to see whether the values of i and j have crossed each other. If not, we interchange the elements at the key (m^{th})position with the elements at the jth position. This brings the key element to the jth position, and we find that the elements to its left are less than it, and the elements to its right are greater than it. Therefore we can split the list into two sublists. The first sublist is composed of elements from the mth position to the $(j–1)^{th}$ position, and the second sublist consists of elements from the $(j+1)^{th}$ position to the nth position. We then repeat the same procedure on each of the sublists separately.

Choice of the key

We can choose any entry in the list as the key. The choice of the first entry is often a poor choice for the key, since if the list has already been sorted, there will be no element less than the first element selected as the key. So, one of the sublists will be empty. So we choose a key near the center of the list in the hope that our choice will partition the list in such a manner that about half of the elements will end up on one side of the key, and half will end up on the other.

Therefore the function `getkeyposition` is

```
int getkeyposition(int i,j)
{
   return(( i+j )/ 2);
}
```

The choice of the key near the center is also arbitrary, so it is not necessary to always divide the list exactly in half. It may also happen that one sublist is much larger than the other. So some other method of selecting a key should be used. A good way to choose a key is to use a random number generator to choose the position of the next key in each activation of quick sort. Therefore, the function `getkeyposition` is:

```
int getkeyposition(int i,j)
{
   return(random number in the range of i to j);
}
```

Program

```
#include <stdio.h>
#define MAX 10
```

ABC Amber CHM Converter Trial version, http://www.processtext.com/abcchm.html

```
void swap(int *x,int *y)
{
   int temp;
   temp = *x;
   *x = *y;
   *y = temp;
}
int getkeyposition(int i,int j )
{
   return((i+j) /2);
}
void qsort(int list[],int m,int n)
{
   int key,i,j,k;
   if( m < n)
   {
      k = getkeyposition(m,n);
      swap(&list[m],&list[k]);
      key = list[m];
      i = m+1;
      j = n;
      while(i <= j)
      {
         while((i <= n) && (list[i] <= key))
                i++;
         while((j >= m) && (list[j] > key))
                j-;
         if( i < j)
                swap(&list[i],&list[j]);
      }
      swap(&list[m],&list[j]);
      qsort(list[],m,j-l);
      qsort(list[],j+1,n);
   }
}
void readlist(int list[],int n)
{
   int i;
   printf("Enter the elements\n");
   for(i=0;i<n;i++)
       scanf("%d",&list[i]);
}
void printlist(int list[],int n)
{
```

```
   int i;
   printf("The elements of the list are: \n");
   for(i=0;i<n;i++)
       printf("%d\t",list[i]);
}

void main()
{
   int list[MAX], n;
   printf("Enter the number of elements in the list max = 10\n");
   scanf("%d",&n);
   readlist(list,n);
   printf("The list before sorting is:\n");
   printlist(list,n);
   qsort(list,0,n-1);
   printf("\nThe list after sorting is:\n");
   printlist(list,n);
}
```

Example

Input

Enter the number of elements in the list, max = 10

```
10
```

Enter the elements

```
7
99
23
11
65
43
23
21
21
77
```

Output

The list before sorting is:

The elements of the list are:

```
7 99 23 11 65 43 23 21 21 77
```

The list after sorting is:

ABC Amber CHM Converter Trial version, http://www.processtext.com/abcchm.html

Figure 21.12: A binary tree of an expression along with its inorder and postorder.

Given an order of traversal of a tree, it is possible to construct a tree; for example, consider the folowing order:

Inorder = DBEAC

We can construct the binary trees shown in Figure 21.13 by using this order of traversal:

ABC Amber CHM Converter Trial version, http://www.processtext.com/abcchm.html

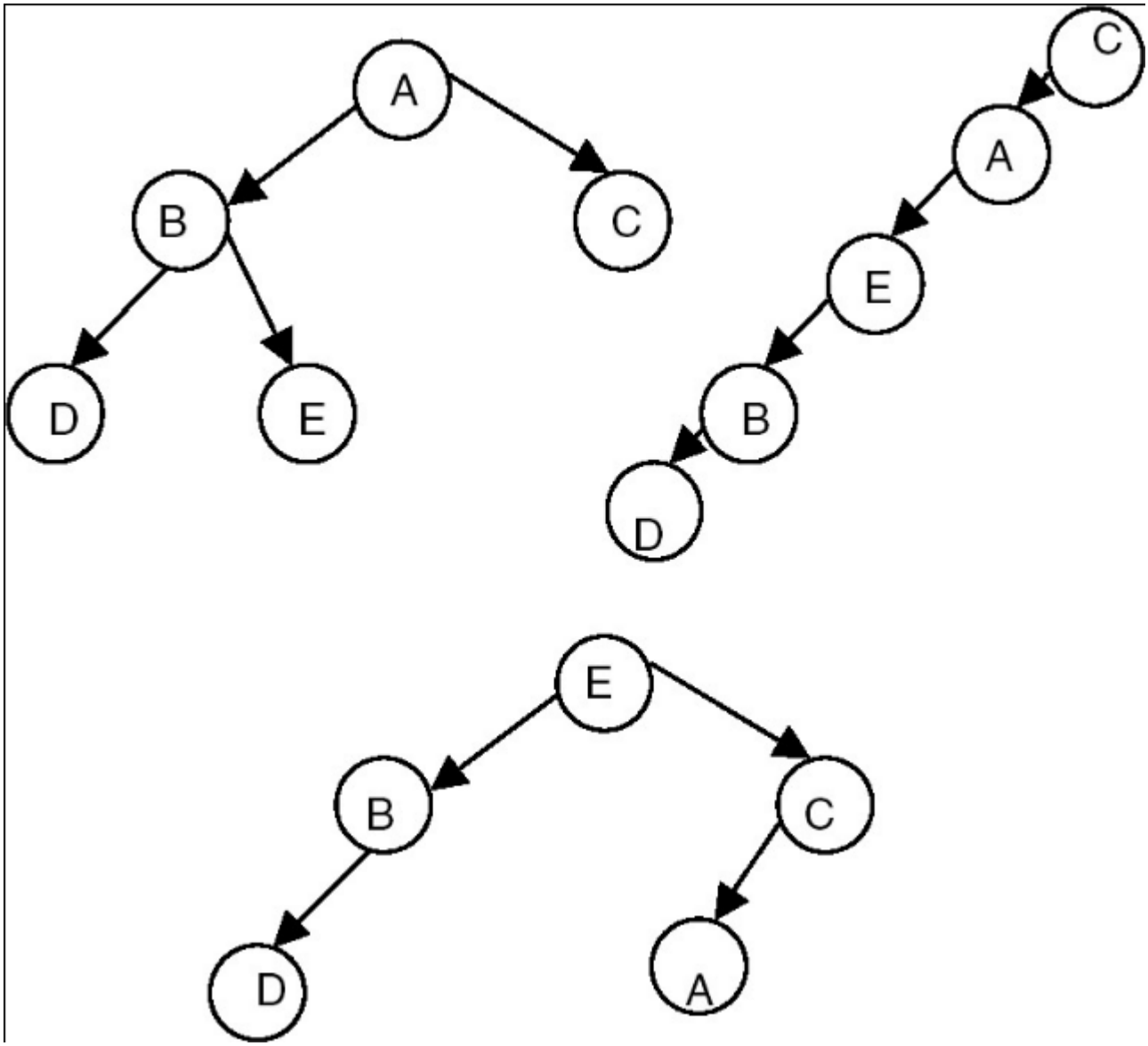

Figure 21.13: Binary trees constructed using the given inorder.

Therefore, we conclude that given only one order of traversal of a tree, it is possible to construct a number of binary trees; a unique binary tree cannot be constructed with only one order of traversal. For construction of a unique binary tree, we require two orders, in which one has to be inorder; the other can be preorder or postorder. For example, consider the following orders:

Inorder = DBEAC

Postorder = DEBCA

We can construct the unique binary tree shown in Figure 21.14 by using these orders of traversal:

ABC Amber CHM Converter Trial version, http://www.processtext.com/abcchm.html

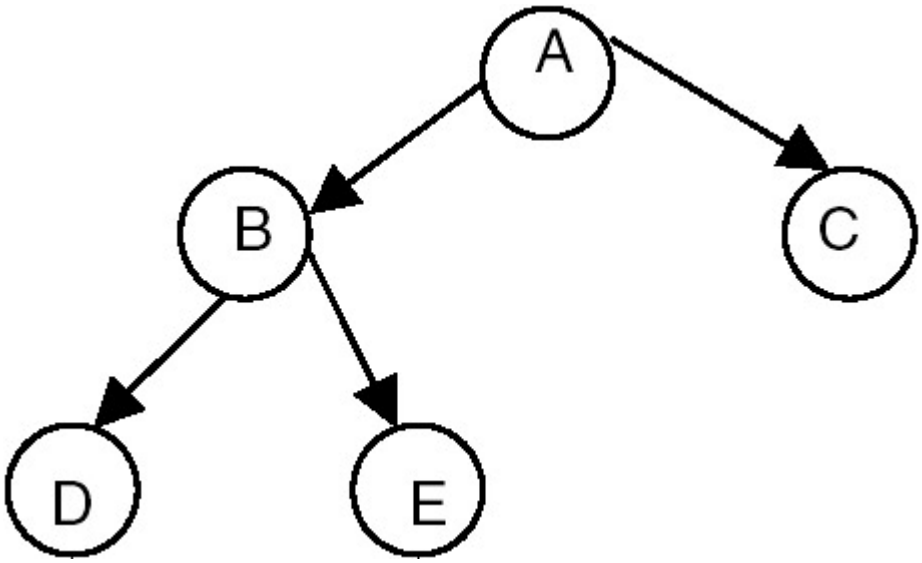

Figure 21.14: A unique binary tree constructed using its inorder and postorder.

Previous Next

ABC Amber CHM Converter Trial version, http://www.processtext.com/abcchm.html

BINARY SEARCH TREE

Introduction

A *binary search tree* is a binary tree that may be empty, and every node must contain an identifier. An identifier of any node in the left subtree is less than the identifier of the root. An identifier of any node in the right subtree is greater than the identifier of the root. Both the left subtree and right subtree are binary search trees.

A binary search tree is shown in Figure 21.15.

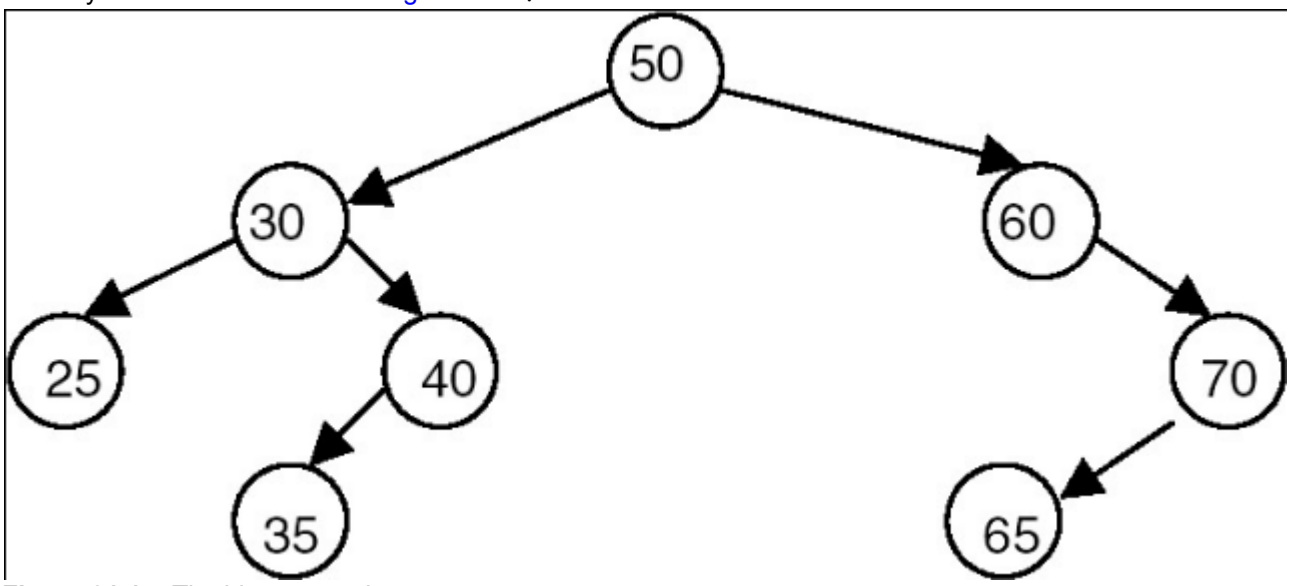

Figure 21.15: The binary search tree.

The binary search tree is basically a binary tree, and therefore it can be traversed in inorder, preorder, and postorder. If we traverse a binary search tree in inorder and print the identifiers contained in the nodes of the tree, we get a sorted list of identifiers in ascending order.

A binary search tree is an important search structure. For example, consider the problem of searching a list. If a list is ordered, searching becomes faster if we use a contiguous list and perform a binary search. But if we need to make changes in the list, such as inserting new entries and deleting old entries, using a contiguous list would be much slower, because insertion and deletion in a contiguous list requires moving many of the entries every time. So we may think of using a linked list because it permits insertions and deletions to be carried out by adjusting only a few pointers. But in an n-linked list, there is no way to move through the list other than one node at a time, permitting only sequential access. Binary trees provide an excellent solution to this problem. By making the entries of an ordered list into the nodes of a binary search tree, we find that we can search for a key in O(n log$n$) steps.

Program: Creating a Binary Search Tree

We assume that every node of a binary search tree is capable of holding an integer data item and that the links can be made to point to the root of the left subtree and the right subtree, respectively. Therefore, the structure of the node can be defined using the following declaration:

```
struct tnode
    {
        int data;
        struct tnode *lchild,*rchild;
    };
```

ABC Amber CHM Converter Trial version, http://www.processtext.com/abcchm.html

A complete C program to create a binary search tree follows:

```
#include <stdio.h>
#include <stdlib.h>
struct tnode
{
   int data;
   struct tnode *lchild, *rchild;
};

struct tnode *insert(struct tnode *p,int val)
{
   struct tnode *temp1,*temp2;
   if(p == NULL)
   {
      p = (struct tnode *) malloc(sizeof(struct tnode)); /* insert the new
node as root node*/
         if(p == NULL)
           {
      printf("Cannot allocate\n");
      exit(0);
          }
       p->data = val;
       p->lchild=p->rchild=NULL;
   }
  else
  {
   temp1 = p;
   /* traverse the tree to get a pointer to that node whose child will be the
newly created node*/
  while(temp1 != NULL)
  {
     temp2 = temp1;
     if( temp1 ->data > val)
          temp1 = temp1->lchild;
     else
          temp1 = temp1->rchild;
  }
  if( temp2->data > val)
  {
  temp2->lchild = (struct tnode*)malloc(sizeof(struct tnode));/*inserts the
newly created node as left child*/
          temp2 = temp2->lchild;
          if(temp2 == NULL)
               {
```

ABC Amber CHM Converter Trial version, http://www.processtext.com/abcchm.html

```
          printf("Cannot allocate\n");
          exit(0);
              }
          temp2->data = val;
          temp2->lchild=temp2->rchild = NULL;
  }
  else
  {
     temp2->rchild = (struct tnode*)malloc(sizeof(struct tnode));/ *inserts
the newly created node
   as left child*/
      temp2 = temp2->rchild;
      if(temp2 == NULL)
           {
      printf("Cannot allocate\n");
      exit(0);
          }
     temp2->data = val;
     temp2->lchild=temp2->rchild = NULL;
}
}
return(p);
}
/* a function to binary tree in inorder */
void inorder(struct tnode *p)
   {
      if(p != NULL)
        {
           inorder(p->lchild);
          printf("%d\t",p->data);
         inorder(p->rchild);
         }
   }
void main()
{
   struct tnode *root = NULL;
   int n,x;
   printf("Enter the number of nodes\n");
   scanf("%d",&n);
   while( n - > 0)
     {
         printf("Enter the data value\n");
         scanf("%d",&x);
         root = insert(root,x);
```

```
    }
     inorder(root);
 }
```

Explanation

1. To create a binary search tree, we use a function called `insert`, which creates a new node with the data value supplied as a parameter to it, and inserts it into an already existing tree whose root pointer is also passed as a parameter.
2. The function accomplishes this by checking whether the tree whose root pointer is passed as a parameter is empty. If it is empty, then the newly created node is inserted as a root node. If it is not empty, then it copies the root pointer into a variable `temp1`. It then stores the value of `temp1` in another variable, `temp2`, and compares the data value of the node pointed to by `temp1` with the data value supplied as a parameter. If the data value supplied as a parameter is smaller than the data value of the node pointed to by `temp1`, it copies the left link of the node pointed to by `temp1` into `temp1` (goes to the left); otherwise it copies the right link of the node pointed to by `temp1` into `temp1` (goes to the right).
3. It repeats this process until `temp1` reaches 0. When `temp1` becomes 0, the new node is inserted as a left child of the node pointed to by `temp2`, if the data value of the node pointed to by `temp2` is greater than the data value supplied as a parameter. Otherwise, the new node is inserted as a right child of the node pointed to by `temp2`. Therefore the insert procedure is:
   - Input: 1. The number of nodes that the tree to be created should have
     2. The data values of each node in the tree to be created
   - Output: The data value of the nodes of the tree in inorder

Example

- Input: 1. The number of nodes that the created tree should have = 5
  2. The data values of the nodes in the tree to be created are: 10, 20, 5, 9, 8
- Output : 5 8 9 10 20

Program

A function for inorder traversal of a binary tree:

```
void inorder(struct tnode *p)
    {
       if(p != NULL)
         {
 inorder(p->lchild);
 printf("%d\t",p->data);
    inorder(p->rchild);
}
```

A non-recursive/iterative function for traversing a binary tree in inorder is given here for the purpose of doing the analysis.

```
void inorder(struct tnode *p)
{
 struct tnode *stack[100];
 int top;
 top = –1;
if(p != NULL)
 {
```

ABC Amber CHM Converter Trial version, http://www.processtext.com/abcchm.html

```
    top++;
    stack[top] = p;
    p = p->lchild;
    while(top >= 0)
       {
          while ( p!= NULL)/* push the left child onto stack*/
           {
      top++;
                stack[top] =p;
     p = p->lchild;
   }
        p = stack[top];
   top-;
printf("%d\t",p->data);
   p = p->rchild;
   if ( p != NULL) /* push right child*/
      {
         top++;
                         stack[top] = p;
          p = p->lchild;
      }
   }
 }
}
```

A function for preorder traversal of a binary tree:

```
void preorder(struct tnode *p)
    {
       if(p != NULL)
         {
printf("%d\t",p->data);
            preorder(p->lchild);
preorder(p->rchild);
          }
```

A function for postorder traversal of a binary tree:

```
void postorder(struct node *p)
    {
       if(p != NULL)
         {
    postorder(p->lchild);
       postorder(p->rchild);
printf("%d\t",p->data);
```

ABC Amber CHM Converter Trial version, http://www.processtext.com/abcchm.html

```
}
```

Explanation

Consider the iterative version of the inorder just given. If the binary tree to be traversed has *n* nodes, the number of `NULL` links are *n*+1. Since every node is placed on the stack once, the statements `stack[top]:=p` and `p:=stack[top]` are executed *n* times. The test for `NULL` links will be done exactly *n*+1 times. So every step will be executed no more than some small constant times *n*. So the order of the algorithm is O(*n*). A similar analysis can be done to obtain the estimate of the computation time for preorder and postorder.

Constructing a Binary Tree Using the Preorder and Inorder Traversals

To obtain the binary tree, we reverse the preorder traversal and take the first node that is a root node. We then search for this node in the inorder traversal. In the inorder traversal, all the nodes to the left of this node will be the part of the left subtree, and all the nodes to the right of this node will be the part of the right subtree. We then consider the next node in the reversed preorder. If it is a part of the left subtree, then we make it the left child of the root; if it is part of the right subtree, we make it part of right subtree. This procedure is repeated recursively to get the tree as shown in Figure 21.16.

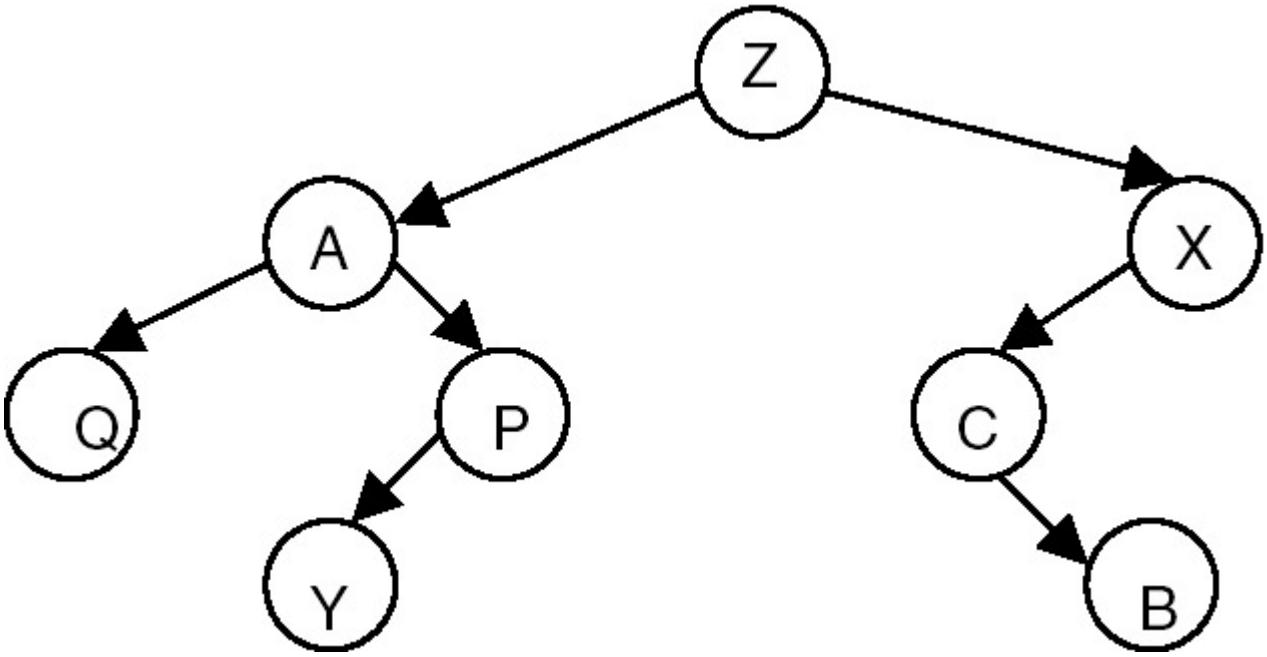

Figure 21.16: A unique binary tree constructed using the inorder and postorder.

For example, for the preorder and inorder traversals of a binary tree, the binary tree and its postorder traversal are as follows:

- Z,A,Q,P,Y,X,C,B = Preorder
- Q,A,Z,Y,P,C,X,B = Inorder

The postorder for this tree is:

Z,A,P,X,B,C,Y,Q

Previous Next

ABC Amber CHM Converter Trial version, http://www.processtext.com/abcchm.html

COUNTING THE NUMBER OF NODES IN A BINARY SEARCH TREE

Introduction

To count the number of nodes in a given binary tree, the tree is required to be traversed recursively until a leaf node is encountered. When a leaf node is encountered, a count of 1 is returned to its previous activation (which is an activation for its parent), which takes the count returned from both the children's activation, adds 1 to it, and returns this value to the activation of its parent. This way, when the activation for the root of the tree returns, it returns the count of the total number of the nodes in the tree.

Program

A complete C program to count the number of nodes is as follows:

```
#include <stdio.h>
#include <stdlib.h>
struct tnode
{
   int data;
   struct tnode *lchild, *rchild;
};
int count(struct tnode *p)
    {
               if( p == NULL)
      return(0);
              else
      if( p->lchild == NULL && p->rchild == NULL)
                return(1);
      else
                return(1 + (count(p->lchild) + count(p->rchild)));

    }

struct tnode *insert(struct tnode *p,int val)
   {
      struct tnode *temp1,*temp2;
      if(p == NULL)
      {
         p = (struct tnode *) malloc(sizeof(struct tnode)); /* insert the new
node as root node*/
            if(p == NULL)
              {
          printf("Cannot allocate\n");
          exit(0);
               }
           p->data = val;
```

ABC Amber CHM Converter Trial version, http://www.processtext.com/abcchm.html

```
            p->lchild=p->rchild=NULL;
       }
      else
      {
       temp1 = p;
       /* traverse the tree to get a pointer to that node whose child will be
the newly created node*/
      while(temp1 != NULL)
      {
        temp2 = temp1;
        if( temp1 ->data > val)
             temp1 = temp1->lchild;
        else
             temp1 = temp1->rchild;
      }
      if( temp2->data > val)
      {
         temp2->lchild = (struct tnode*)malloc(sizeof(struct tnode)); /
*inserts the newly created node
       as left child*/
          temp2 = temp2->lchild;
          if(temp2 == NULL)
               {
          printf("Cannot allocate\n");
          exit(0);
              }
         temp2->data = val;
         temp2->lchild=temp2->rchild = NULL;
    }
    else
    {
       temp2->rchild = (struct tnode*)malloc(sizeof(struct tnode));/ *inserts
the newly created node
  as left child*/
      temp2 = temp2->rchild;
      if(temp2 == NULL)
           {
      printf("Cannot allocate\n");
      exit(0);
          }
      temp2->data = val;
      temp2->lchild=temp2->rchild = NULL;
  }
  }
```

```
  return(p);
  }
  /* a function to binary tree in inorder */
  void inorder(struct tnode *p)
      {
         if(p != NULL)
           {
             inorder(p->lchild);
            printf("%d\t",p->data);
           inorder(p->rchild);
           }
      }
void main()
{
   struct tnode *root = NULL;
   int n,x;
   printf("Enter the number of nodes\n");
   scanf("%d",&n);
   while( n --- > 0)
      {
         printf("Enter the data value\n");
         scanf("%d",&x);
         root = insert(root,x);
     }
      inorder(root);
     printf("\nThe number of nodes in tree are :%d\n",count(root));
}
```

Explanation

- Input: 1. The number of nodes that the tree to be created should have
  2. The data values of each node in the tree to be created
- Output: 1. The data value of the nodes of the tree in inorder
  2. The count of number of node in a tree.

Example

- Input: 1. The number of nodes the created tree should have = 5
  2. The data values of the nodes in the tree to be created are: 10, 20, 5, 9, 8
- Output: 1. 5 8 9 10 20
  2. The number of nodes in the tree is 5

Previous Next

ABC Amber CHM Converter Trial version, http://www.processtext.com/abcchm.html

SWAPPING OF LEFT AND RIGHT SUBTREES OF A GIVEN BINARY TREE

Introduction

An elegant method of swapping the left and right subtrees of a given binary tree makes use of a recursive algorithm, which recursively swaps the left and right subtrees, starting from the root.

Program

```
#include <stdio.h>
#include <stdlib.h>
struct tnode
{
  int data;
  struct tnode *lchild, *rchild;
};

struct tnode *insert(struct tnode *p,int val)
{
   struct tnode *temp1,*temp2;
   if(p == NULL)
   {
         p = (struct tnode *) malloc(sizeof(struct tnode)); /* insert the new
node as root node*/
         if(p == NULL)
           {
      printf("Cannot allocate\n");
      exit(0);
          }
       p->data = val;
       p->lchild=p->rchild=NULL;
   }
  else
  {
    temp1 = p;
   /* traverse the tree to get a pointer to that node whose child will be the
newly created node*/
  while(temp1 != NULL)
  {
    temp2 = temp1;
    if( temp1 ->data > val)
         temp1 = temp1->lchild;
    else
         temp1 = temp1->rchild;
```

ABC Amber CHM Converter Trial version, http://www.processtext.com/abcchm.html

```
  }
  if( temp2->data > val)
  {
     temp2->lchild = (struct tnode*)malloc(sizeof(struct tnode));/ *inserts
the newly created node
  as left child*/
     temp2 = temp2->lchild;
     if(temp2 == NULL)
          {
      printf("Cannot allocate\n");
      exit(0);
           }
       temp2->data = val;
       temp2->lchild=temp2->rchild = NULL;
  }
  else
  {
     temp2->rchild = (struct tnode*)malloc(sizeof(struct tnode));/ *inserts
the newly created node
  as left child*/
     temp2 = temp2->rchild;
     if(temp2 == NULL)
          {
     printf("Cannot allocate\n");
     exit(0);
          }
     temp2->data = val;
     temp2->lchild=temp2->rchild = NULL;
}
}
return(p);
}
/* a function to binary tree in inorder */
void inorder(struct tnode *p)
    {
       if(p != NULL)
         {
            inorder(p->lchild);
           printf("%d\t",p->data);
          inorder(p->rchild);
          }
      }
struct tnode *swaptree(struct tnode *p)
{
```

```
    struct tnode *temp1=NULL, *temp2=NULL;
    if( p != NULL)
    { temp1= swaptree(p->lchild);
                   temp2 = swaptree(p->rchild);
               p->rchild = temp1;
                p->lchild = temp2;
      }
      return(p);
  }

void main()
{
  struct tnode *root = NULL;
  int n,x;
  printf("Enter the number of nodes\n");
  scanf("%d",&n);
  while( n - > 0)
  {
    printf("Enter the data value\n");
    scanf("%d",&x);
    root = insert(root,x);
 }
   printf("The created tree is :\n");
   inorder(root);
   printf("The tree after swapping is :\n");
   root = swaptree(root);
   inorder(root);
   printf("\nThe original tree is \n");
   root = swaptree(root);
   inorder(root);
}
```

Explanation

- Input: 1. The number of nodes that the tree to be created should have
  2. The data values of each node in the tree to be created
- Output: 1. The data value of the nodes of the tree in inorder before interchanging the left and right subtrees
  2. The data value of the nodes of the tree in inorder after interchanging the left and right subtrees

Example

- Input: 1. The number of nodes that the created tree should have = 5
  2. The data values of the nodes in the tree to be created are: 10, 20, 5, 9, 8
- Output: 1. 5 8 9 10 20
  2. 20 10 9 8 5

Previous Next

ABC Amber CHM Converter Trial version, http://www.processtext.com/abcchm.html

SEARCHING FOR A TARGET KEY IN A BINARY SEARCH TREE

Introduction

Data values are given which we call a key and a binary search tree. To search for the key in the given binary search tree, start with the root node and compare the key with the data value of the root node. If they match, return the root pointer. If the key is less than the data value of the root node, repeat the process by using the left subtree. Otherwise, repeat the same process with the right subtree until either a match is found or the subtree under consideration becomes an empty tree.

Program

A complete C program for this search is as follows:

```
#include <stdio.h>
#include <stdlib.h>
struct tnode
{
  int data;
  struct tnode *lchild, *rchild;
};
/* A function to serch for a given data value in a binary search tree*/
struct tnode *search( struct tnode *p,int key)
   {
     struct tnode *temp;
      temp = p;
     while( temp != NULL)
       {
         if(temp->data == key)
                return(temp);
         else
   if(temp->data > key)
      temp = temp->lchild;
   else
      temp = temp->rchild;
        }
return(NULL);
}

/*an iterative function to print the binary tree in inorder*/
void inorder1(struct tnode *p)
{
  struct tnode *stack[100];
  int top;
  top = –1;
 if(p != NULL)
```

ABC Amber CHM Converter Trial version, http://www.processtext.com/abcchm.html

```
 {
    top++;
    stack[top] = p;
    p = p->lchild;
    while(top >= 0)
       {
          while ( p!= NULL)/* push the left child onto stack*/
           {
                       top++;
                 stack[top] =p;
                 p = p->lchild;
         }
         p = stack[top];
         top-;
         printf("%d\t",p->data);
         p = p->rchild;


         if ( p != NULL) /* push right child*/
           {
               top++;
                              stack[top] = p;
               p = p->lchild;
                 }

         }
    }
}
/* A function to insert a new node in binary search tree to
get a tree created*/
struct tnode *insert(struct tnode *p,int val)
{
   struct tnode *temp1,*temp2;
   if(p == NULL)
   {
      p = (struct tnode *) malloc(sizeof(struct tnode)); /* insert the new
node as root node*/
      if(p == NULL)
        {
   printf("Cannot allocate\n");
   exit(0);
       }
    p->data = val;
    p->lchild=p->rchild=NULL;
```

ABC Amber CHM Converter Trial version, http://www.processtext.com/abcchm.html

```
   }
  else
  {
    temp1 = p;
   /* traverse the tree to get a pointer to that node whose child will be the
newly created node*/
  while(temp1 != NULL)
  {
    temp2 = temp1;
    if( temp1 ->data > val)
         temp1 = temp1->lchild;
    else
         temp1 = temp1->rchild;
  }
  if( temp2->data > val)
  {
      temp2->lchild = (struct tnode*)malloc(sizeof(struct tnode));/ *inserts
the newly created node
  as left child*/
     temp2 = temp2->lchild;
     if(temp2 == NULL)
          {
     printf("Cannot allocate\n");
     exit(0);
          }
    temp2->data = val;
    temp2->lchild=temp2->rchild = NULL;
  }
  else
  {
     temp2->rchild = (struct tnode*)malloc(sizeof(struct tnode));/ *inserts
the newly created node
  as left child*/
     temp2 = temp2->rchild;
     if(temp2 == NULL)
          {
     printf("Cannot allocate\n");
     exit(0);
         }
     temp2->data = val;
     temp2->lchild=temp2->rchild = NULL;
  }
}
return(p);
```

```
}
void main()
{
   struct tnode *root = NULL, *temp = NULL;
   int n,x;
   printf("Enter the number of nodes in the tree\n");
   scanf("%d",&n);
   while( n - > 0)
       {
         printf("Enter the data value\n");
         scanf("%d",&x);
         root = insert(root,x);
       }
      printf("The created tree is :\n");
      inorder1(root);
      printf("\n Enter the value of the node to be searched\n");
      scanf("%d",&n);
      temp=search(root,n);
      if(temp != NULL)
          printf("The data value is present in the tree \n");
      else
          printf("The data value is not present in the tree \n");
}
```

Explanation

- Input: 1. The number of nodes that the tree to be created should have
  2. The data values of each node in the tree to be created
  3. The key value
- Output: If the key is present and appears in the created tree, then a message "The data value is present in the tree" appears. Otherwise the message "The data value is not present in the tree" appears.

Example

- Input: 1. The number of nodes that the created tree should have = 5
  2. The data values of the nodes in the tree to be created are: 10, 20, 5, 9, 8
  3. The key value = 9
- Output: The data is present in the tree

Previous Next

ABC Amber CHM Converter Trial version, http://www.processtext.com/abcchm.html

DELETION OF A NODE FROM BINARY SEARCH TREE

Introduction

To delete a node from a binary search tree, the method to be used depends on whether a node to be deleted has one child, two children, or no children.

Deletion of a node with two children

Consider the binary search tree shown in Figure 21.17.

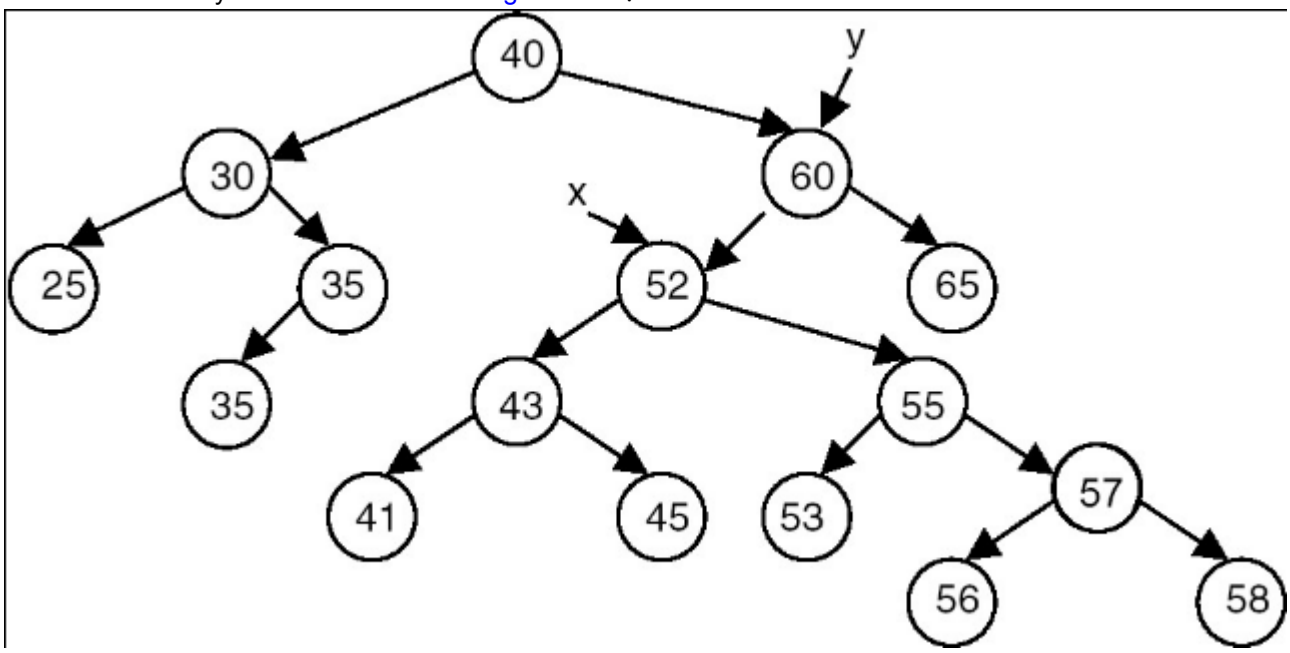

Figure 21.17: A binary tree before deletion of a node pointed to by x.

To delete a node printed to by *x*, we start by letting *y* be a pointer to the node that is the root of the node pointed to by *x*. We store the pointer to the left child of the node pointed to by *x* in a temporary pointer temp. We then make the left child of the node pointed to by *y* the left child of the node pointed to by *x*. We then traverse the tree with the root as the node pointed to by temp to get its right leaf, and make the right child of this right leaf the right child of the node pointed to by *x*, as shown in Figure 21.18.

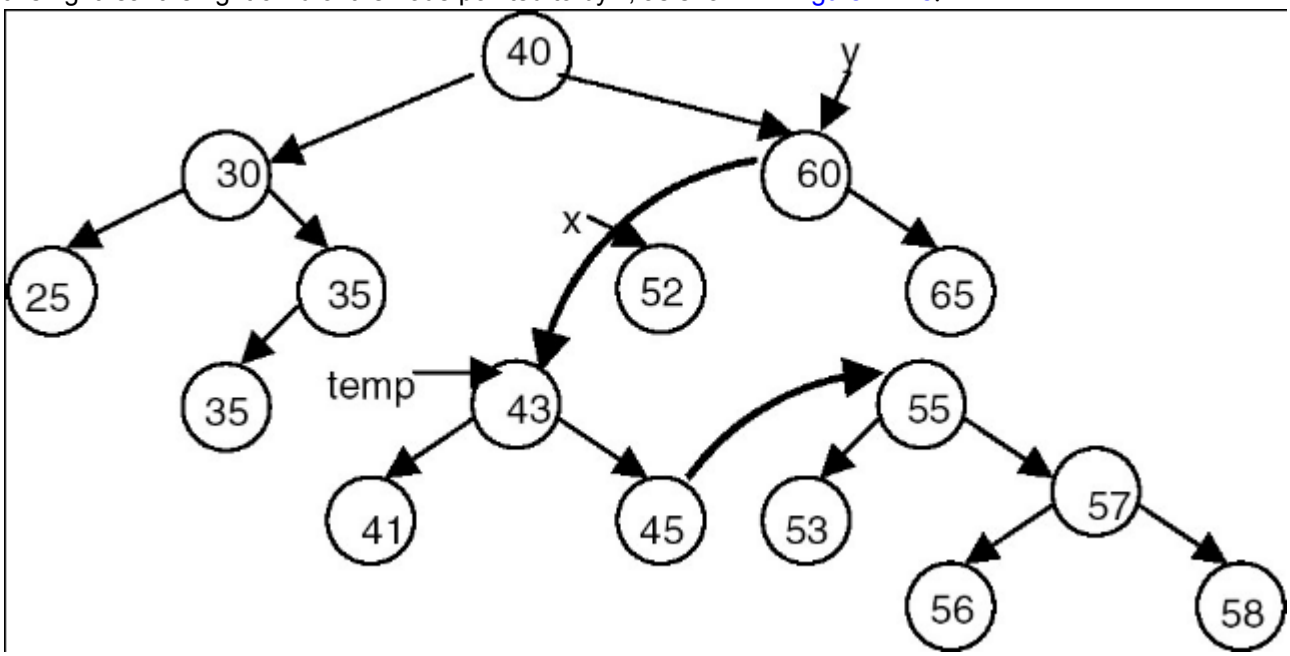

Figure 21.18: A binary tree after deletion of a node pointed to by x.

ABC Amber CHM Converter Trial version, http://www.processtext.com/abcchm.html

Another method is to store the pointer to the right child of the node pointed to by *x* in a temporary pointer temp. We then make the left child of the node pointed by *y* to be the right child of the node pointed to by *x*. We then traverse the tree with the root as the node pointed to by temp to get its left leaf, and make the left child of this left leaf the left child of the node pointed to by *x*, as shown in Figure 21.19.

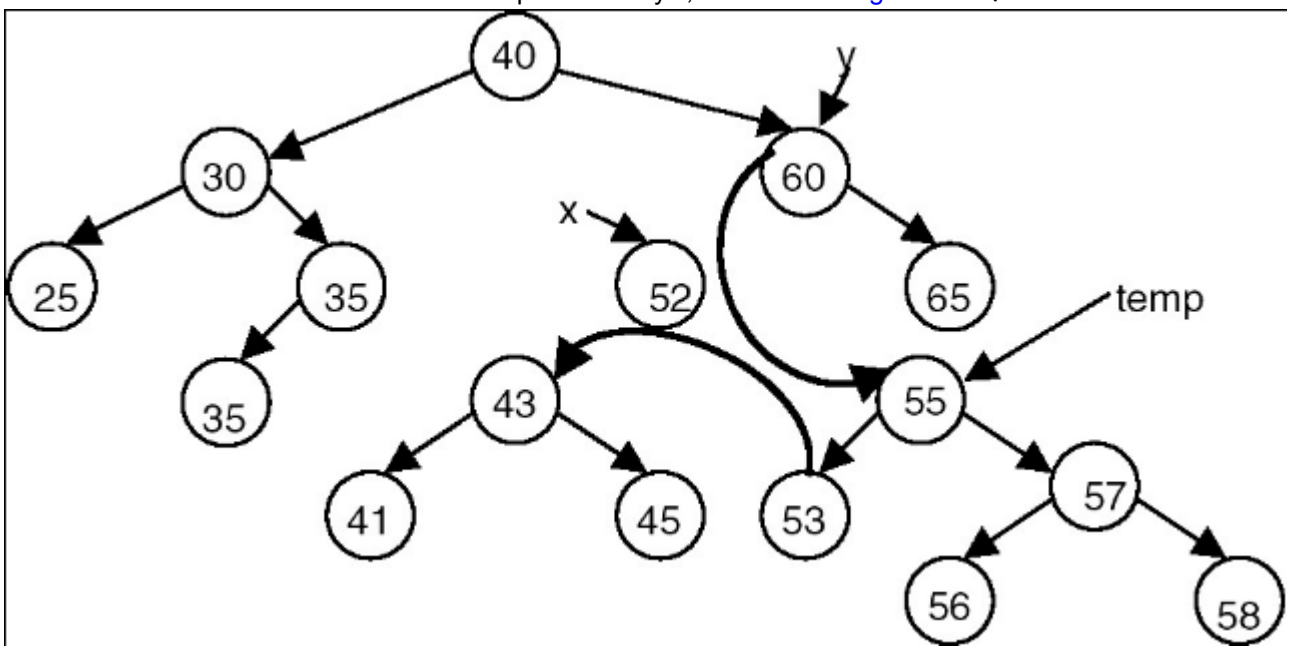

Figure 21.19: A binary tree after deletion of a node pointed to by x.

Deletion of a Node with One Child

Consider the binary search tree shown in Figure 21.20.

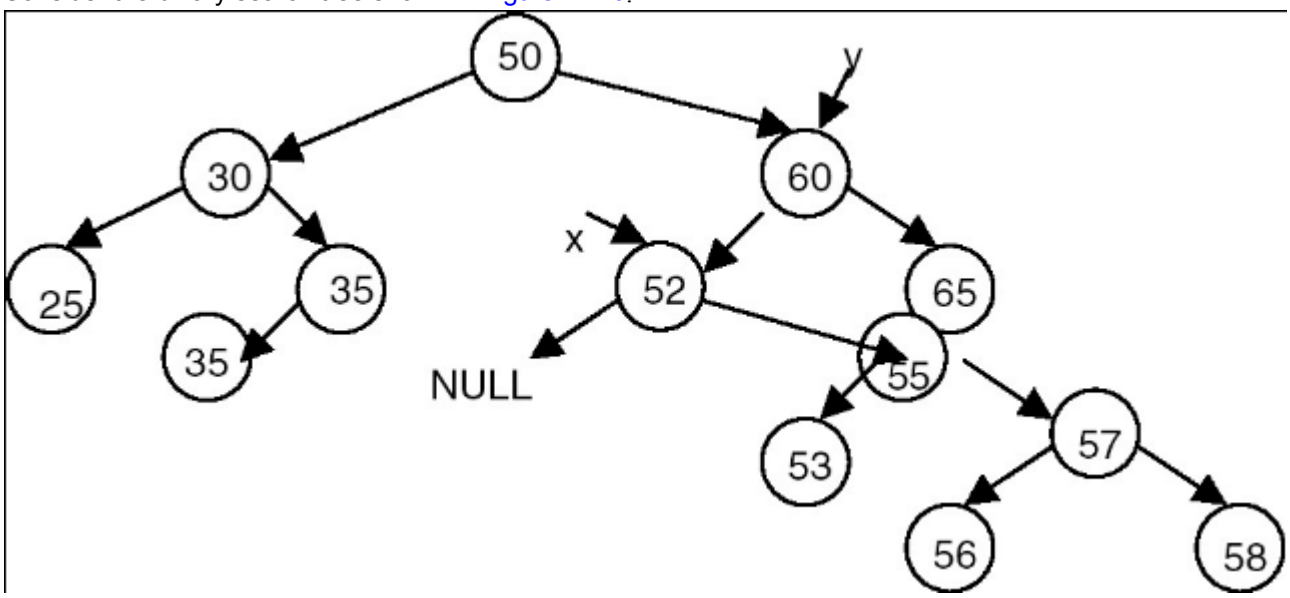

Figure 21.20: A binary tree before deletion of a node pointed to by x.

If we want to delete a node pointed to by *x*, we can do that by letting *y* be a pointer to the node that is the root of the node pointed to by *x*. Make the left child of the node pointed to by *y* the right child of the node pointed to by *x*, and dispose of the node pointed to by *x*, as shown in Figure 21.21.

ABC Amber CHM Converter Trial version, http://www.processtext.com/abcchm.html

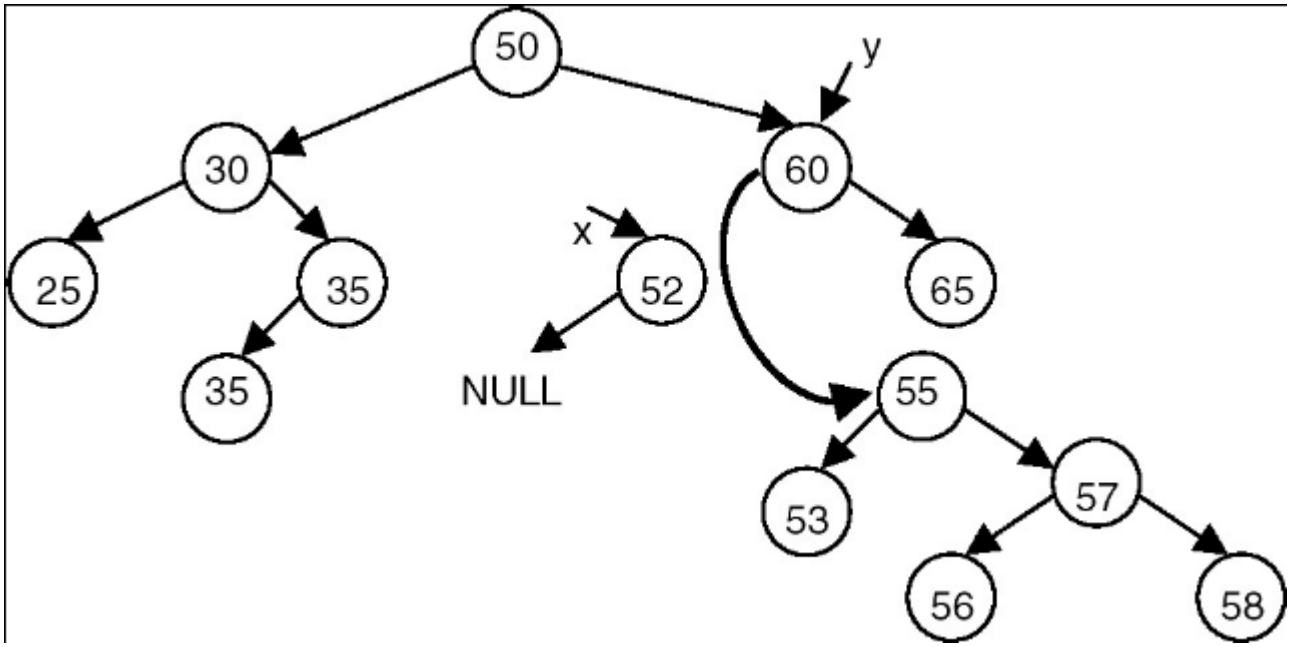

Figure 21.21: A binary tree after deletion of a node pointed to by x.

Deletion of a Node with No Child

Consider the binary search tree shown in Figure 21.22.

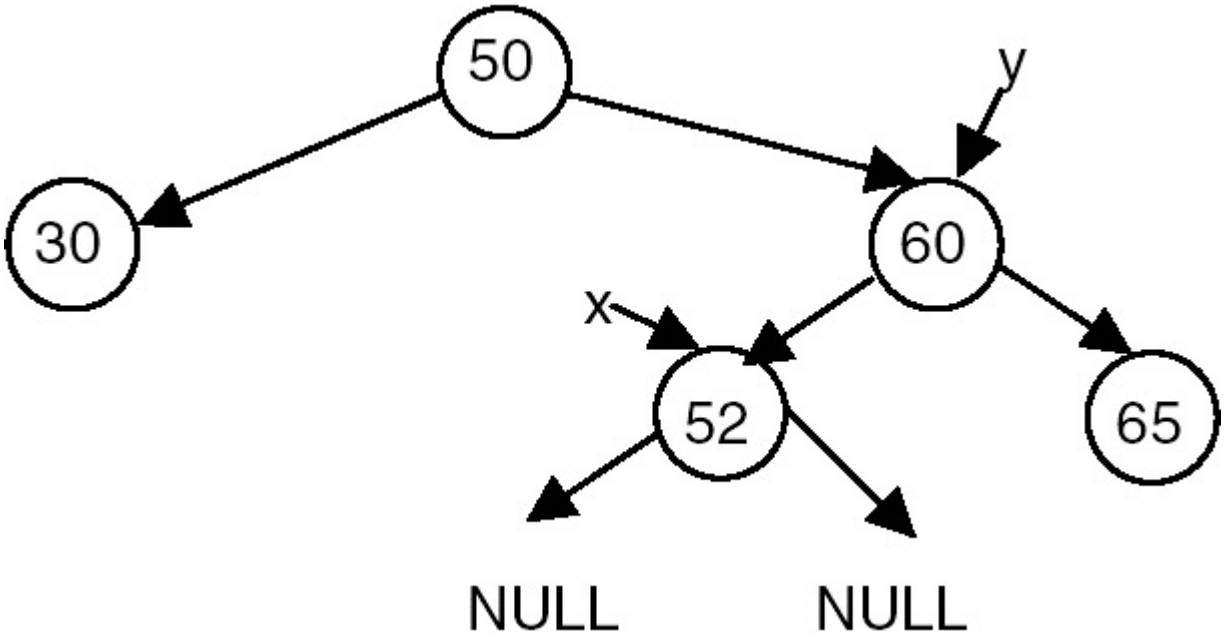

Figure 21.22: A binary tree before deletion of a node pointed to by x.

Set the left child of the node pointed to by *y* to NULL, and dispose of the node pointed to by *x*, as shown in Figure 21.23.

ABC Amber CHM Converter Trial version, http://www.processtext.com/abcchm.html

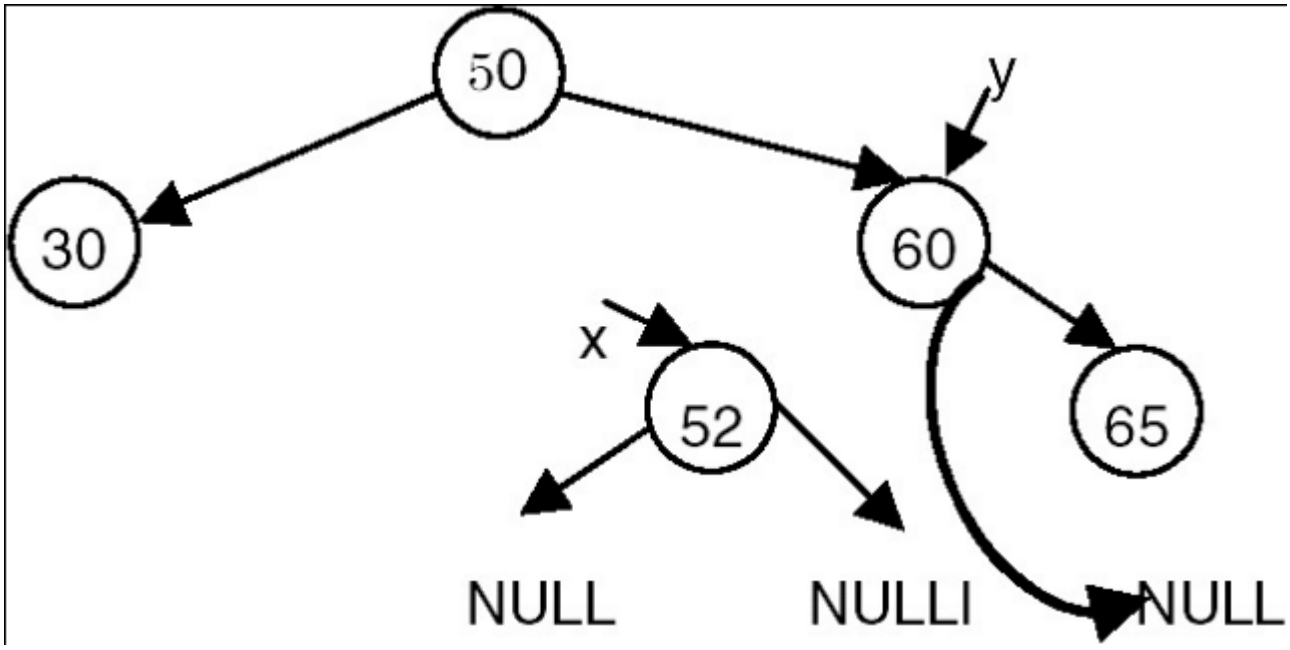

Figure 21.23: A binary tree after deletion of a node pointed to by x.

Program

A complete C program to delete a node, where the data value of the node to be deleted is known, is as follows:

```
#include <stdio.h>
#include <stdlib.h>
struct tnode
{
  int data;
  struct tnode *lchild, *rchild;
};
/* A function to get a pointer to the node whose data value is given
    as well as the pointer to its root */
struct tnode *getptr(struct tnode *p, int key, struct tnode **y)
{
  struct tnode *temp;
     if( p == NULL)
       return(NULL);
     temp = p;
     *y = NULL;
      while( temp != NULL)
       {
         if(temp->data == key)
             return(temp);
         else
     {
             *y = temp; /*store this pointer as root */
     if(temp->data > key)
```

ABC Amber CHM Converter Trial version, http://www.processtext.com/abcchm.html

```
        temp = temp->lchild;
     else
        temp = temp->rchild;
        }
       }
      return(NULL);
}

/* A function to delete the node whose data value is given */
struct tnode *delete(struct tnode *p,int val)
  {
    struct tnode *x, *y, *temp;
    x = getptr(p,val,&y);
    if( x == NULL)
    {
      printf("The node does not exists\n");
      return(p);
    }
    else
    {
    /* this code is for deleting root node*/
    if( x == p)
      {
        temp = x->lchild;
        y = x->rchild;
        p = temp;
        while(temp->rchild != NULL)
      temp = temp->rchild;
      temp->rchild=y;
      free(x);
      return(p);
    }
/* this code is for deleting node having both children */
  if( x->lchild != NULL && x->rchild != NULL)
     {

       if(y->lchild == x)
       {
temp = x->lchild;
y->lchild = x->lchild;
while(temp->rchild != NULL)
    temp = temp->rchild;
temp->rchild=x->rchild;
x->lchild=NULL;
```

ABC Amber CHM Converter Trial version, http://www.processtext.com/abcchm.html

```
x->rchild=NULL;
        }
        else
        {
          temp = x->rchild;
          y->rchild = x->rchild;
           while(temp->lchild != NULL)
      temp = temp->lchild;
    temp->lchild=x->lchild;
x->lchild=NULL;
 x->rchild=NULL;
         }

free(x);
   return(p);
  }
   /* this code is for deleting a node with on child*/
   if(x->lchild == NULL && x->rchild !== NULL)
     {
       if(y->lchild == x)
  y->lchild = x->rchild;
         else
           y->rchild = x->rchild;
         x->rchild; = NULL;
         free(x);
         return(p);
       }
       if( x->lchild != NULL && x->rchild == NULL)
         {
           if(y->lchild == x)
              y->lchild = x->lchild ;
           else
              y->rchild = x->lchild;
           x->lchild = NULL;
           free(x);
           return(p);
         }
       /* this code is for deleting a node with no child*/
       if(x->lchild == NULL && x->rchild == NULL)
        {
           if(y->lchild == x)
              y->lchild = NULL ;
           else
              y->rchild = NULL;
```

ABC Amber CHM Converter Trial version, http://www.processtext.com/abcchm.html

```
            free(x);
            return(p);
         }
     }
}
/*an iterative function to print the binary tree in inorder*/
void inorder1(struct tnode *p)
{
 struct tnode *stack[100];
 int top;
 top = –1;
if(p != NULL)
 {
    top++;
    stack[top] = p;
    p = p->lchild;
    while(top >= 0)
       {
          while ( p!= NULL)/* push the left child onto stack*/
           {
                        top++;
                  stack[top] =p;
                  p = p->lchild;
 }
      p = stack[top];
      top-;
      printf("%d\t",p->data);
      p = p->rchild;
      if ( p != NULL) /* push right child*/
         {
             top++;
         stack[top] = p;
             p = p->lchild;
      }
   }
     }
   }
   /* A function to insert a new node in binary search tree to get a tree
created*/
  struct tnode *insert(struct tnode *p,int val)
  {
     struct tnode *temp1,*temp2;
     if(p == NULL)
     {
```

ABC Amber CHM Converter Trial version, http://www.processtext.com/abcchm.html

```
        p = (struct tnode *) malloc(sizeof(struct tnode)); /* insert the new
node as root node*/
        if(p == NULL)
          {
     printf("Cannot allocate\n");
     exit(0);
          }
       p->data = val;
       p->lchild=p->rchild=NULL;
  }
  else
  {
    temp1 = p;
   /* traverse the tree to get a pointer to that node whose child will be the
newly created node*/
  while(temp1 != NULL)
  {
    temp2 = temp1;
    if( temp1 ->data > val)
         temp1 = temp1->lchild;
    else
         temp1 = temp1->rchild;
  }
  if( temp2->data > val)
  {
     temp2->lchild = (struct tnode*)malloc(sizeof(struct tnode));/ *inserts
the newly created node
  as left child*/
     temp2 = temp2->lchild;
     if(temp2 == NULL)
          {
     printf("Cannot allocate\n");
     exit(0);
         }
    temp2->data = val;
    temp2->lchild=temp2->rchild = NULL;
  }
  else
  {
      temp2->rchild = (struct tnode*)malloc(sizeof(struct tnode));/ *inserts
the newly created node
  as left child*/
     temp2 = temp2->rchild;
     if(temp2 == NULL)
          {
```

ABC Amber CHM Converter Trial version, http://www.processtext.com/abcchm.html

```
      printf("Cannot allocate\n");
      exit(0);
          }
    temp2->data = val;
    temp2->lchild=temp2->rchild = NULL;
  }
  }
  return(p);
  }

  void main()
  {
    struct tnode *root = NULL;
    int n,x;
    printf("Enter the number of nodes in the tree\n");
    scanf("%d",&n);
    while( n - > 0)
        {
          printf("Enter the data value\n");
          scanf("%d",&x);
          root = insert(root,x);
        }
       printf("The created tree is :\n");
       inorder1(root);
       printf("\n Enter the value of the node to be deleted\n");
       scanf("%d",&n);
       root=delete(root,n);
       printf("The tree after deletion is \n");
       inorder1(root);
}
```

Explanation

This program first creates a binary tree with a specified number of nodes with their respective data values. It then takes the data value of the node to be deleted, obtains a pointer to the node containing that data value, and obtains another pointer to the root of the node to be deleted. Depending on whether the node to be deleted is a root node, a node with two children a node with only one child, or a node with no children, it carries out the manipulations as discussed in the section on deleting a node. After deleting the specified node, it returns the pointer to the root of the tree.

- Input: 1. The number of nodes that the tree to be created should have
  2. The data values of each node in the tree to be created
  3. The data value in the node to be deleted
- Output: 1. The data values of the nodes in the tree in inorder before deletion
  2. The data values of the nodes in the tree in inorder after deletion

Example

- Input: 1. The number of nodes taht the created tree should have = 5
  2. The data values of the nodes in the tree to be created are: 10, 20, 5, 9, 8
  3. The data value in the node to be deleted = 9

- Output: 1.5 8 9 10 20
  2 5 8 10 20

Applications of Binary Search Trees

One of the applications of a binary search tree is the implementation of a dynamic dictionary. This application is appropriate because a dictionary is an ordered list that is required to be searched frequently, and is also required to be updated (insertion and deletion mode) frequently. So it can be implemented by making the entries in a dictionary into the nodes of a binary search tree. A more efficient implementation of a dynamic dictionary involves considering a key to be a sequence of characters, and instead of searching by comparison of entire keys, we use these characters to determine a multi-way branch at each step. This will allow us to make a 26-way branch according to the first letter, followed by another branch according to the second letter and so on.

General Comments on Binary Trees

1. Trees are used to organize a collection of data items into a hierarchical structure.
2. A tree is a collection of elements called nodes, one of which is distinguished as the root, along with a relation that places a hierarchical structure on the node.
3. The degree of a node of a tree is the number of descendants that node has.
4. A leaf node of a tree is a node with a degree equal to 0.
5. The degree of a tree is the maximum of the degree of the nodes of the tree.
6. The level of the root node is 1, and as we descend the tree, we increment the level of each node by 1.
7. Depth of a tree is the maximum value of the level for the nodes in the tree.
8. A binary tree is a special case of tree, in which no node can have degree greater than 2.
9. The maximum number of nodes at level i in a binary tree is 2^{i-1}.
10. The maximum number of nodes in a binary tree of depth *k* is 2^{k-1}.
11. A complete binary tree of depth *k* is a tree with n nodes in which these n nodes can be numbered sequentially from 1 to *n*.
12. If a binary tree is a complete binary tree, it can be represented by an array capable of holding *n* elements where n is the number of nodes in a complete binary tree.
13. Inorder, preorder, and postorder are the three commonly used traversals that are used to traverse a binary tree.
14. In inorder traversal, we start with the root node, visit the left subtree first, then process the data of the root node, followed by that of the right subtree.
15. In preorder traversal, we start with the root node. First we process the data of the root node, then visit the left subtree, then the right subtree.
16. In postorder traversal, we start with the root node, visit the left subtree first, then visit the right subtree, and then process the data of the root node.
17. To construct a unique binary tree, we require two orders of traversal, in which one has to be inorder; the other could be preorder or postorder.
18. A binary search tree is an important search structure that is dynamic and allows a search by using $O(\log_2^n)$ steps.

Exercises

1. Write a C program to count the number of non-leaf nodes of a binary tree.
2. Write a C program to delete all the leaf nodes of a binary tree.
3. How many binary trees are possible with three nodes?
4. Write a C program to construct a binary tree with inorder and preorder traversals. Test it for the following inorder and preorder traversals:
   - Inorder: 5, 1, 3, 11, 6, 8, 4, 2, 7
   - Preorder: 6, 1, 5, 11, 3, 4, 8, 7, 2

Previous Next

ABC Amber CHM Converter Trial version, http://www.processtext.com/abcchm.html

Chapter 22: Graphs

GRAPHS

Introduction

Graphs are natural models that are used to represent arbitrary relationships among data objects. We often need to represent such arbitrary relationships among the data objects while dealing with problems in computer science, engineering, and many other disciplines. Therefore, the study of graphs as one of the basic data structures is important.

Basic Definitions and Terminology

A graph is a structure made of two components: a set of vertices V, and a set of edges E. Therefore, a graph is G = (V,E), where G is a graph. The graph may be directed or undirected. In a *directed graph*, every edge of the graph is an ordered pair of vertices connected by the edge, whereas in an *undirected graph*, every edge is an unordered pair of vertices connected by the edge. Figure 22.1 shows an undirected and a directed graph.

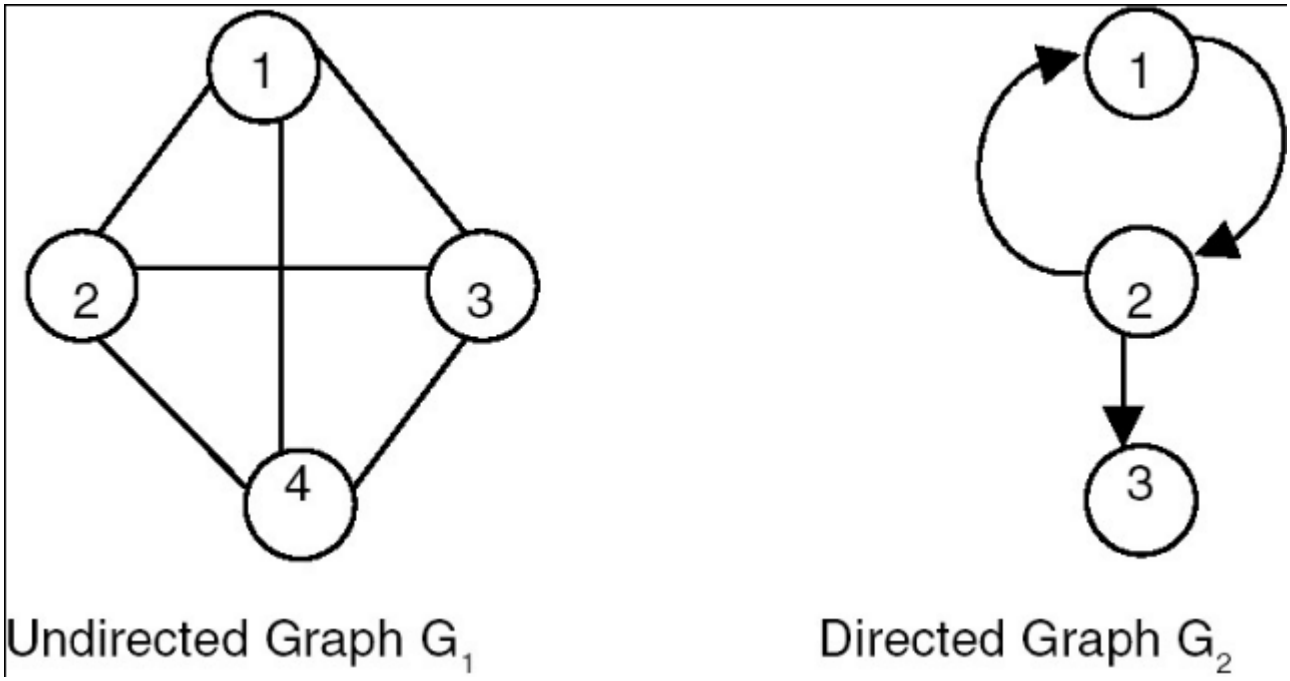

Figure 22.1: Graphs.

Incident edge: (v_i,v_j) is an edge, then edge(v_i,v_j) is said to be incident to vertices v_i and v_j. For example, in graph G_1 shown in Figure 22.1, the edges incident on vertex 1 are (1,2), (1,4), and (1,3), whereas in G_2, the edges incident on vertex 1 are (1,2).

Degree of vertex: The number of edges incident onto the vertex. For example, in graph G_1, the degree of vertex 1 is 3, because 3 edges are incident onto it. For a directed graph, we need to define indegree and outdegree. *Indegree* of a vertex vi is the number of edges incident onto vi, with vi as the head. *Outdegree* of vertex vi is the number of edges incident onto vi, with vi as the tail. For graph G_2, the indegree of vertex 2 is 1, whereas the outdegree of vertex 2 is 2.

Directed edge: A directed edge between the vertices vi and vj is an ordered pair. It is denoted by <vi,vj>.

Undirected edge: An undirected edge between the vertices v_i and v_j is an unordered pair. It is denoted by (v_i,v_j).

Path: A path between vertices v_p and v_q is a sequence of vertices v_p, v_{i1}, v_{i2},..., v_{in},v_q such that there exists a sequence of edges (v_p, v_{i1}), (v_{i1}, v_{i2}), ..., (v_{in}, v_q). In case of a directed graph, a path between the vertices v_p and

v_q is a sequence of vertices v_p, v_{i1}, v_{i2},…, v_{in}, v_q such that there exists a sequence of edges <v_p, v_{i1}>, < v_{i1}, v_{i2}>, …, <v_{in}, v_q>. If there exists a path from vertex v_p to v_q in an undirected graph, then there always exists a path from v_q to v_p also. But, in the case of a directed graph, if there exists a path from vertex v_p to v_q, then it does not necessarily imply that there exists a path from v_q to v_p also.

Simple path: A simple path is a path given by a sequence of vertices in which all vertices are distinct except the first and the last vertices. If the first and the last vertices are same, the path will be a cycle.

Maximum number of edges: The maximum number of edges in an undirected graph with *n* vertices is $n(n-1)/2$. In a directed graph, it is $n(n-1)$.

Subgraph: A *subgraph* of a graph G = (V,E) is a graph G where V(G) is a subset of V(G). E(G) consists of edges (v1,v2) in E(G), such that both v1 and v2 are in V(G). [Note: If G = (V,E) is a graph, then V(G) is a set of vertices of G and E(G) is a set of edges of G.]

If E(G) consists of all edges (v1,v2) in E(G), such that both v1 and v2 are in V(G), then G is called an induced subgraph of G. For example, the graph shown in Figure 22.2 is a subgraph of the graph G2.

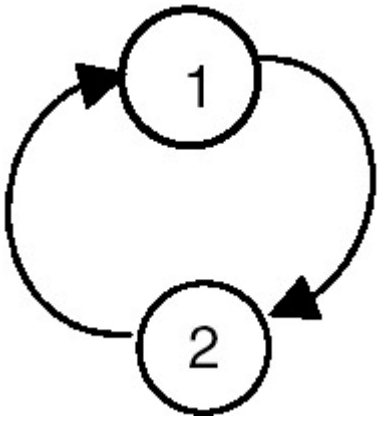

Figure 22.2: The subgraph of graph G2.

For the graph shown in Figure 22.3, one of the induced subgraphs is shown in Figure 22.4.

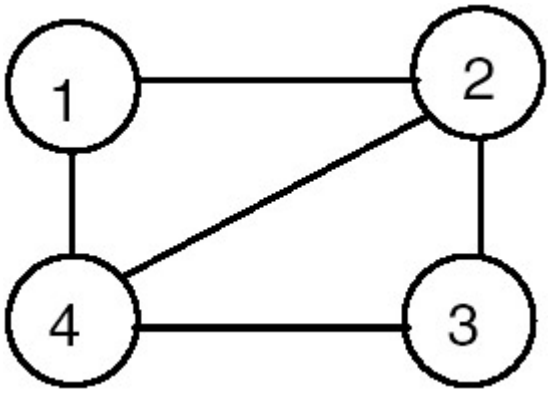

Figure 22.3: Graph G.

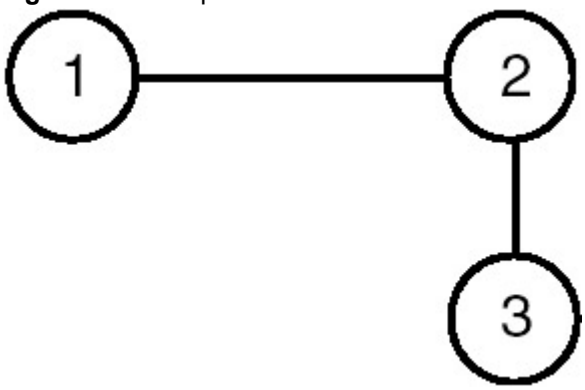

Figure 22.4: Induced subgraph of Graph G of Figure 22.3.

In the undirected graph G, the two vertices v_1 and v_2 are said to be connected if there exists a path in G from v_1 to v_2 (being an undirected graph, there exists a path from v_2 to v_1 also).

Connected graph: A graph G is said to be connected if for every pair of distinct vertices (v_i,v_j), there is a path from v_i to v_j. A connected graph is shown in Figure 22.5.

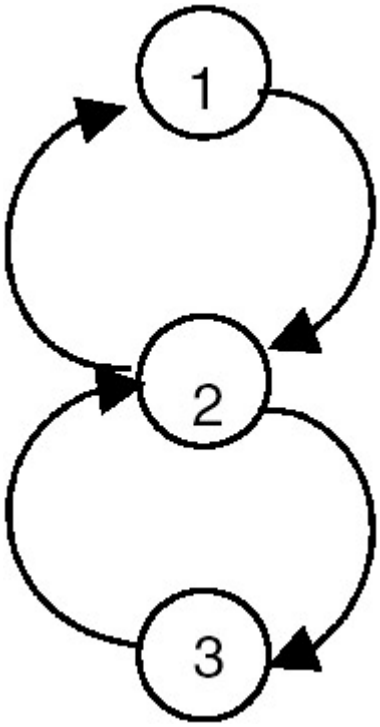

Figure 22.5: A connected graph.

Completely connected graph: A graph G is completely connected if, for every pair of distinct vertices (v_i,v_j), there exists an edge. A completely connected graph is shown in Figure 22.6.

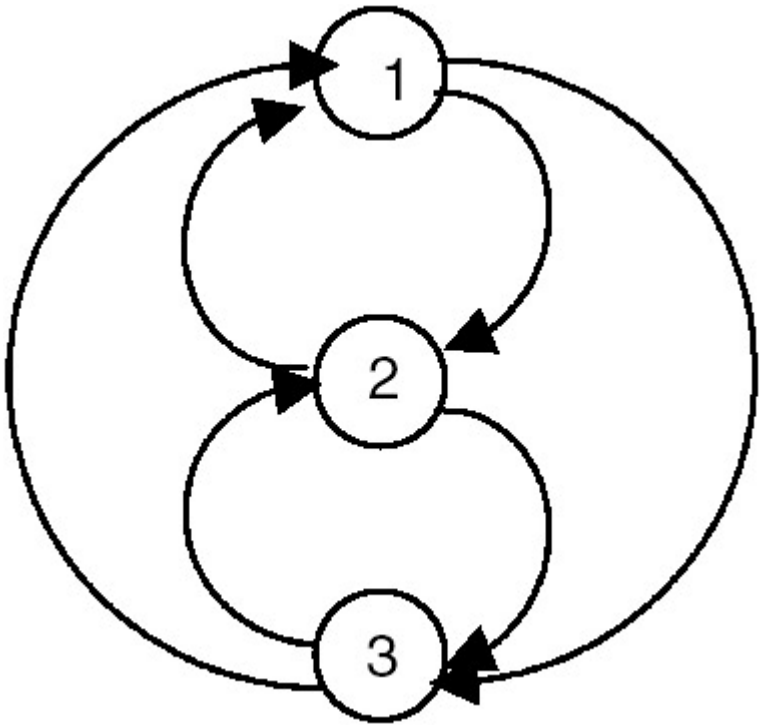

Figure 22.6: A completely connected graph.

Previous Next

ABC Amber CHM Converter Trial version, http://www.processtext.com/abcchm.html

REPRESENTATIONS OF A GRAPH

Array Representation

One way of representing a graph with n vertices is to use an n^2 matrix (that is, a matrix with *n* rows and *n* columns—that means there is a row as well as a column corresponding to every vertex of the graph). If there is an edge from v_i to v_j then the entry in the matrix with row index as v_i and column index as v_j is set to 1 ($adj[v_i, v_j] = 1$, if (v_i, v_j) is an edge of graph G). If e is the total number of edges in the graph, then there will 2e entries which will be set to 1, as long as G is an undirected graph. Whereas if G were a directed graph, only e entries would have been set to 1 in the adjacency matrix. The adjacency matrix representation of an undirected as well as a directed graph is show in Figure 22.7.

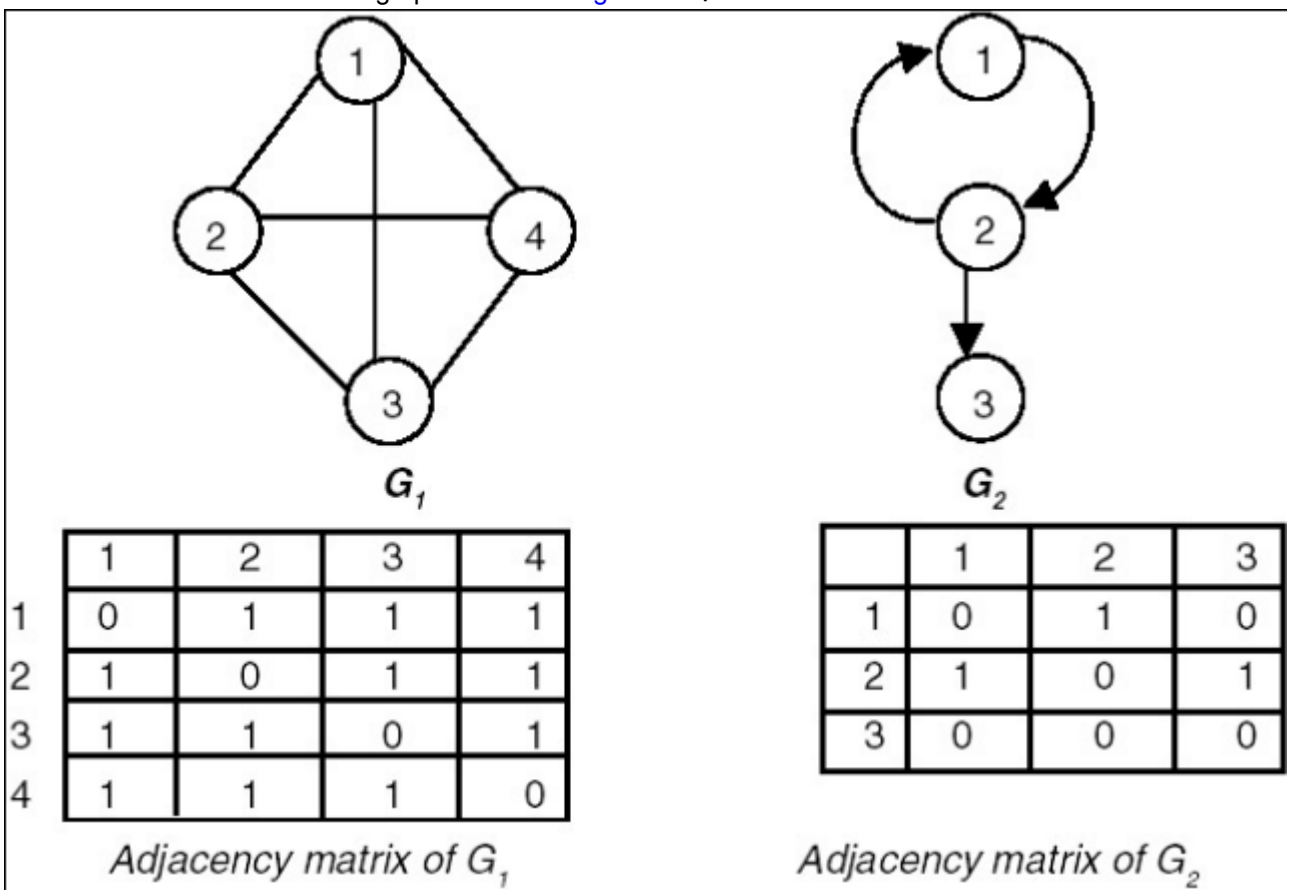

	1	2	3	4
1	0	1	1	1
2	1	0	1	1
3	1	1	0	1
4	1	1	1	0

Adjacency matrix of G_1

	1	2	3
1	0	1	0
2	1	0	1
3	0	0	0

Adjacency matrix of G_2

Figure 22.7: Adjacency matrices.

Example

The adjacency matrix representation of the following diagraph(directed graph), along with the indegree and outdegree of each node is shown here:

ABC Amber CHM Converter Trial version, http://www.processtext.com/abcchm.html

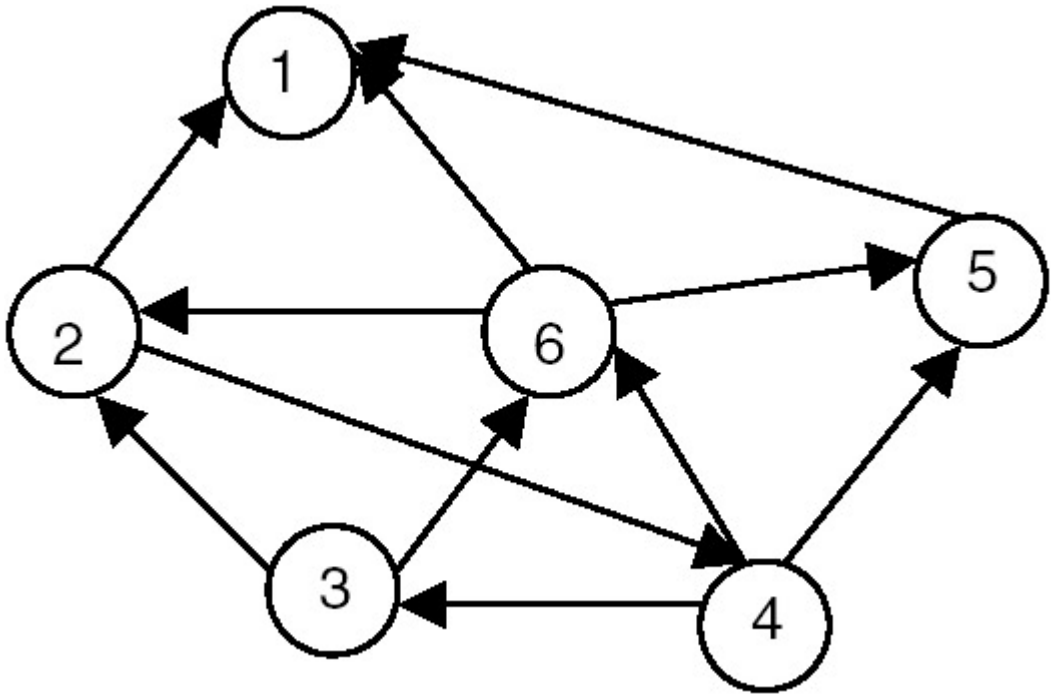

The adjacency matrix representation of the above diagraph is shown here:

	1	2	3	4	5	6
1	0	0	0	0	0	0
2	1	0	0	1	0	0
3	0	1	0	0	0	1
4	0	0	1	0	1	1
5	1	0	0	0	0	0
6	1	1	0	0	1	0

The indegree and outdegree of each node is shown here:

ABC Amber CHM Converter Trial version, http://www.processtext.com/abcchm.html

	Indegree	Outdegree
1	3	0
2	2	2
3	1	2
4	1	3
5	2	1
6	2	3

Linked List Representation

Another way of representing a graph G is to maintain a list for every vertex containing all vertices adjacent to that vertex, as shown in Figure 22.8.

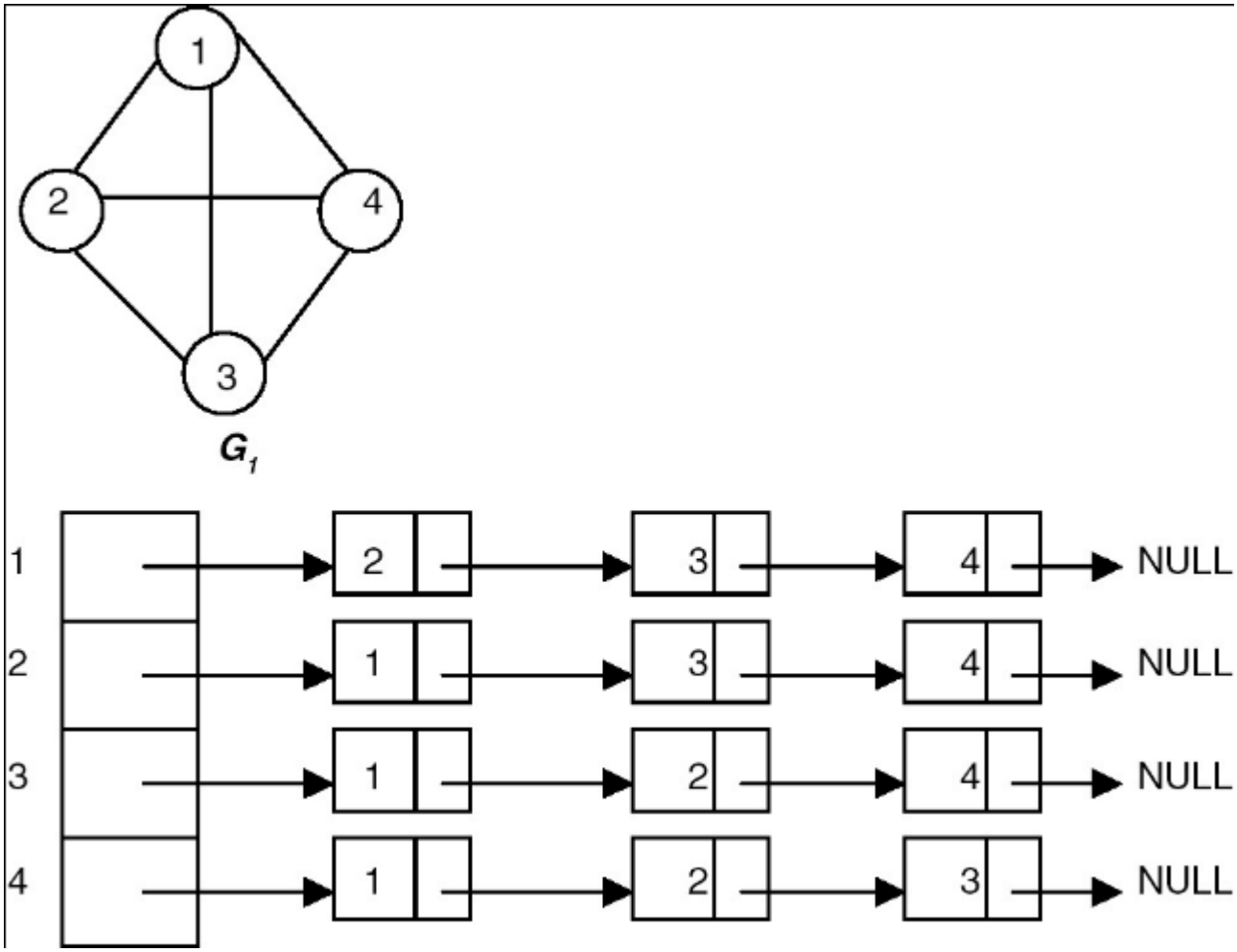

Figure 22.8: Adjacency list of G_1.

Previous Next

ABC Amber CHM Converter Trial version, http://www.processtext.com/abcchm.html

ABC Amber CHM Converter Trial version, http://www.processtext.com/abcchm.html

COMPUTING INDEGREE AND OUTDEGREE OF A NODE OF A GRAPH USING ADJACENCY MATRIX REPRESENTATION

Introduction

To compute the indegree of a node n by using the adjacency matrix representation of a graph, use the node number *n* as a column index in the adjacency matrix and count the number of 1's in that column of the adjacency matrix. This count is the indegree of node *n*. Similarly, to compute the outdegree of a node *n* of a graph, use the node number *n* as the row index in the adjacency matrix and count the number of 1's in that row of the adjacency matrix. This is the outdegree of the node *n*. A complete C program to compute the indegree and outdegree of each node of a graph using the adjacency matrix representation of a graph follows.

Program: Computing the indegree and outdegree

```
#include <stdio.h>
#define MAX 10
/* a function to build an adjacency matrix of the graph*/
void buildadjm(int adj[][MAX], int n)
   {
     int i,j;
     for(i=0;i<n;i++)
         for(j=0;j<n;j++)
         {
         printf("Enter 1 if there is an edge from %d to %d, otherwise enter 0
\n",
i,j);

         scanf("%d",&adj[i][j]);
         }
   }

/* a function to compute outdegree of a node*/
int outdegree(int adj[][MAX],int x,int n)
    {
       int i, count =0;
       for(i=0;i<n;i++)
           if( adj[x][i] ==1) count++;
      return(count);
    }
   /* a function to compute indegree of a node*/
   int indegree(int adj[][MAX],int x,int n)
       {
          int i, count =0;
          for(i=0;i<n;i++)
              if( adj[i][x] ==1) count++;
         return(count);
```

ABC Amber CHM Converter Trial version, http://www.processtext.com/abcchm.html

```
        }
  void main()
      {
        int adj[MAX][MAX],node,n,i;
        printf("Enter the number of nodes in graph maximum = %d\n",MAX);
         scanf("%d",&n);
        buildadjm(adj,n);
        for(i=0;i<n;i++)
        {
           printf("The indegree of the node %d is %d\n",i,indegree(adj,i,n));
         printf("The outdegree of the node %d is %d\n",
i,outdegree(adj,i,n));
    }
}
```

Explanation

1. This program uses the adjacency matrix representation of a directed graph to compute the indegree and outdegree of each node of the graph.
2. It first builds an adjacency matrix of the graph by calling a `buildadjm` function, then goes in a loop to compute the indegree and outdegree of each node by calling the `indegree` and `outdegree` functions, respectively.
3. The indegree function counts the number of 1's in a column of an adjacency matrix using the node number whose indegree is to be computed as a column index.
4. The `outdegree` function counts the number of 1's in a row of an adjacency matrix by using the node number whose outdegree is to be computed as a row index.
   - Input: 1. The number of nodes in a graph
     2. Information about edges, in the form of values, to be stored in adjacency matrix 1, if there is an edge from node i to node j; 0 otherwise.
   - Output: The indegree and outdegree of each node.

Example

ABC Amber CHM Converter Trial version, http://www.processtext.com/abcchm.html

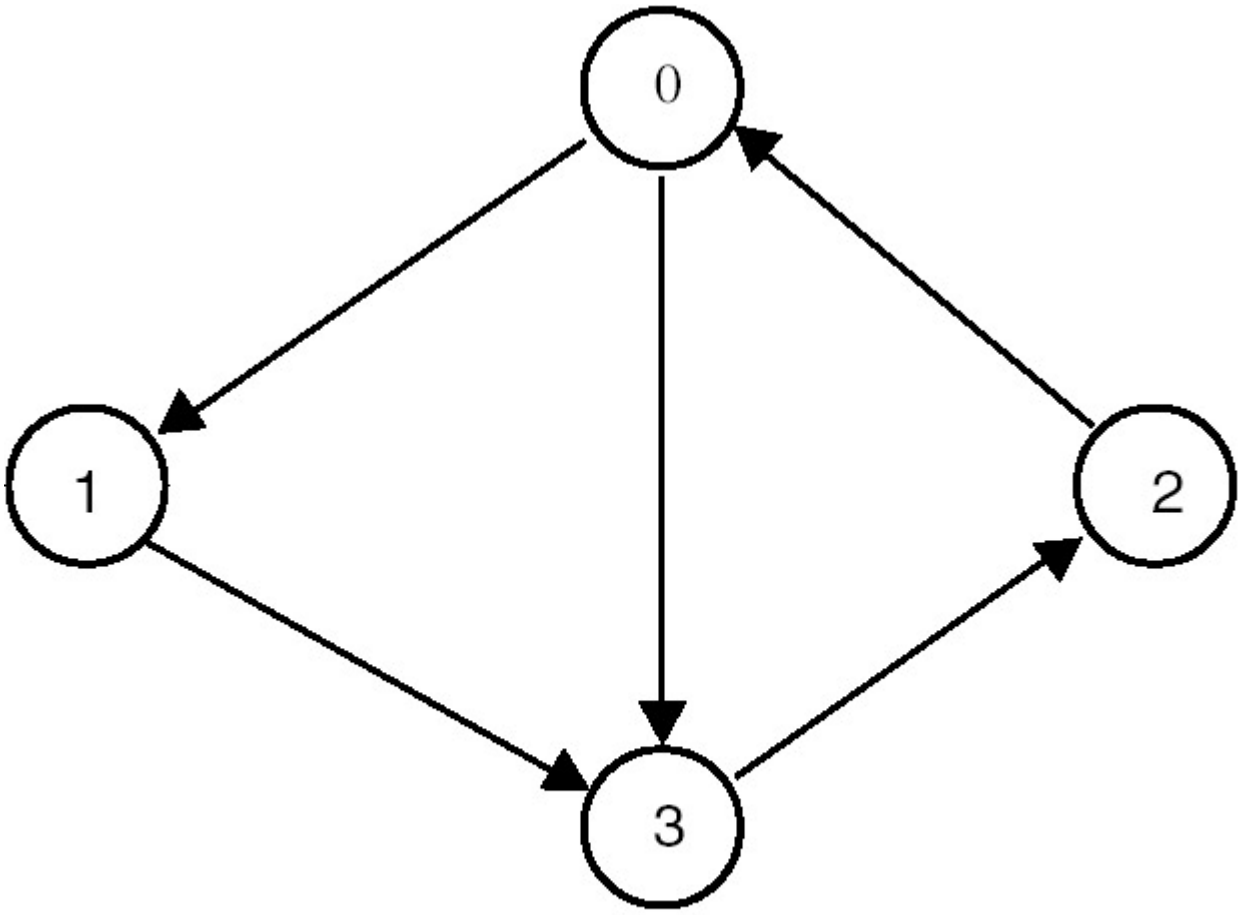

Graph G_1

The adjacency matrix for graph G_1 is:

	0	1	2	3
0	0	1	0	1
1	0	0	0	1
2	1	0	0	0
3	0	0	1	0

For this graph as the input, the output is:

- The indegree of node 0 is 1
- The outdgree of node 0 is 2
- The indegree of node 1 is 1
- The outdgree of node 1 is 1
- The indegree of node 2 is 1
- The outdgree of node 2 is 1
- The indegree of node 3 is 2
- The outdgree of node 3 is 1

Previous Next

ABC Amber CHM Converter Trial version, http://www.processtext.com/abcchm.html

ABC Amber CHM Converter Trial version, http://www.processtext.com/abcchm.html

DEPTH-FIRST TRAVERSAL

Introduction

A graph can be traversed either by using the *depth-first traversal* or *breadth-first traversal*. When a graph is traversed by visiting the nodes in the forward (deeper) direction as long as possible, the traversal is called depth-first traversal. For example, for the graph shown in Figure 22.9, the depth-first traversal starting at the vertex 0 visits the node in the orders:

i. 0 1 2 6 7 8 5 3 4
ii. 0 4 3 5 8 6 7 2 1

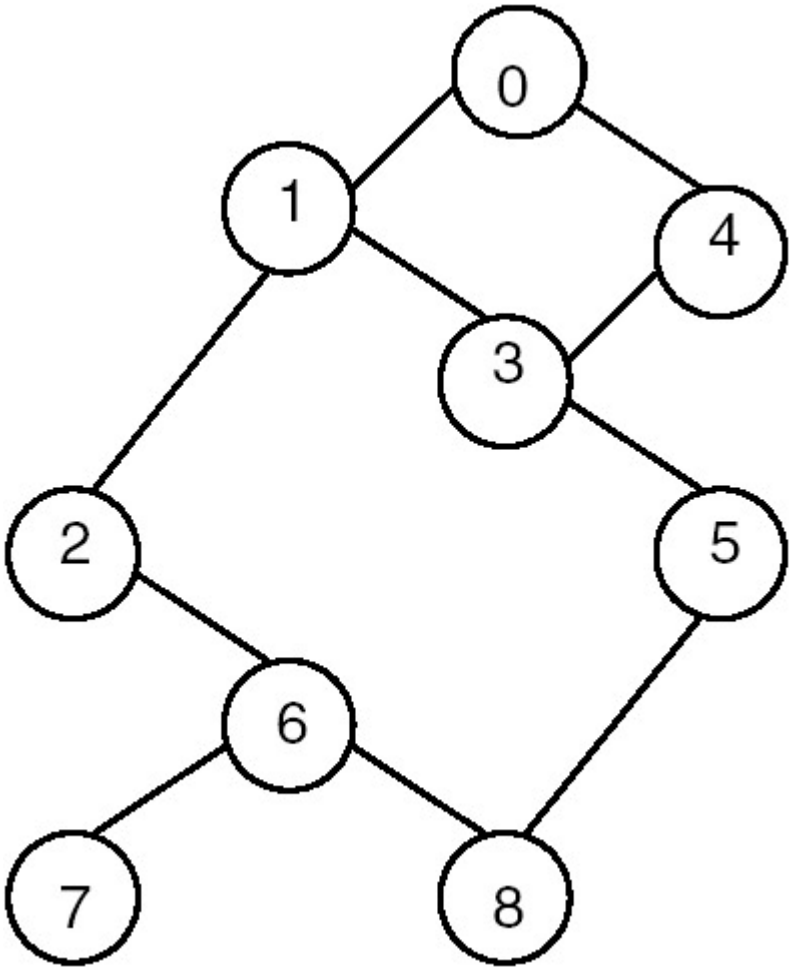

Figure 22.9: Graph G and its depth first traversals starting at vertex 0.

A complete C program for depth-first traversal of a graph follows. It makes use of an array visited of *n* elements where *n* is the number of vertices of the graph, and the elements are Boolean. If visited[i] = 1 then it means that the ith vertex is visited. Initially we set visited[i] = 0.

Program

```
#include <stdio.h>
#define max 10

/* a function to build adjacency matrix of a graph */
void buildadjm(int adj[][max], int n)
   {
     int i,j;
```

ABC Amber CHM Converter Trial version, http://www.processtext.com/abcchm.html

```
     for(i=0;i<n;i++)
         for(j=0;j<n;j++)
          {
     printf("enter 1 if there is an edge from %d to %d, otherwise enter
0 \n",
   i,j);

            scanf("%d",&adj[i][j]);
            }
      }

/* a function to visit the nodes in a depth-first order */
void dfs(int x,int visited[],int adj[][max],int n)
{
   int j;
   visited[x] = 1;
   printf("The node visited id %d\n",x);
   for(j=0;j<n;j++)
      if(adj[x][j] ==1 && visited[j] ==0)
           dfs(j,visited,adj,n);
}
void main()
   {
      int adj[max][max],node,n;
      int i, visited[max];
      printf("enter the number of nodes in graph maximum = %d\n",max);
      scanf("%d",&n);
      buildadjm(adj,n);
      for(i=0; i<n; i++)
        visited[i] =0;
      for(i=0; i<n; i++)
       if(visited[i] ==0)
            dfs(i,visited,adj,n);
      }
```

Explanation

1. Initially, all the elements of an array named `visited` are set to 0 to indicate that all the vertices are unvisited.
2. The traversal starts with the first vertex (that is, vertex 0), and marks it visited by setting `visited[0]` to 1. It then considers one of the unvisited vertices adjacent to it and marks it `visited`, then repeats the process by considering one of its unvisited adjacent vertices.
3. Therefore, if the following adjacency matrix that represents the graph of Figure 22.9 is given as input, the order in which the nodes are visited is given here:
   - Input: 1. The number of nodes in a graph
     2. Information about edges, in the form of values to be stored in adjacency matrix 1 if there is an edge from node i to node j, 0 otherwise
   - Output: Depth-first ordering of the nodes of the graph starting from the initial vertex, which is

vertex 0, in our case.

Example

Input

	0	1	2	3	4	5	6	7	8
0	0	1	0	0	1	0	0	0	0
1	1	0	1	1	0	0	0	0	0
2	0	1	0	0	0	0	1	0	0
3	0	1	0	0	1	1	0	0	0
4	1	0	0	1	0	0	0	0	0
5	0	0	0	1	0	0	0	0	1
6	0	0	1	0	0	0	0	0	1
7	0	0	0	0	0	0	1	0	1
8	0	0	0	0	0	1	1	0	0

Output

0, 1, 2, 6, 8, 5, 3, 4, 7

Analysis

1. If the graph G to which the depth-first search (dfs) is applied is represented using adjacency lists, then the vertices y adjacent to x can be determined by following the list of adjacent vertices for each vertex.
2. Therefore, the `for` loop searching for adjacent vertices has the total cost of $d_1 + d_2 + \ldots + d_n$, where d_i is the degree of vertex v_i, because the number of nodes in the adjacency list of vertex v_i are d_i.
3. If the graph G has n vertices and e edges, then the sum of the degree of each vertex ($d_1 + d_2 + \ldots + d_n$) is 2e. Therefore, there are total of 2e list nodes in the adjacency lists of G. If G is a directed graph, then there are a total of e list nodes only.
4. The algorithm examines each node in the adjacency lists once, at most. So the time required to complete the search is O(e), provided n<= e. Instead of using adjacency lists, if an adjacency matrix is used to represent a graph G, then the time required to determine all adjacent vertices of a vertex is O(n), and since at most n vertices are visited, the total time required is O(n^2).

Previous Next

ABC Amber CHM Converter Trial version, http://www.processtext.com/abcchm.html

BREADTH-FIRST TRAVERSAL

Introduction

When a graph is traversed by visiting all the adjacent nodes/vertices of a node/vertex first, the traversal is called breadth-first traversal. For example, for a graph in which the breadth-first traversal starts at vertex v_1, visits to the nodes take place in the order shown in Figure 22.10.

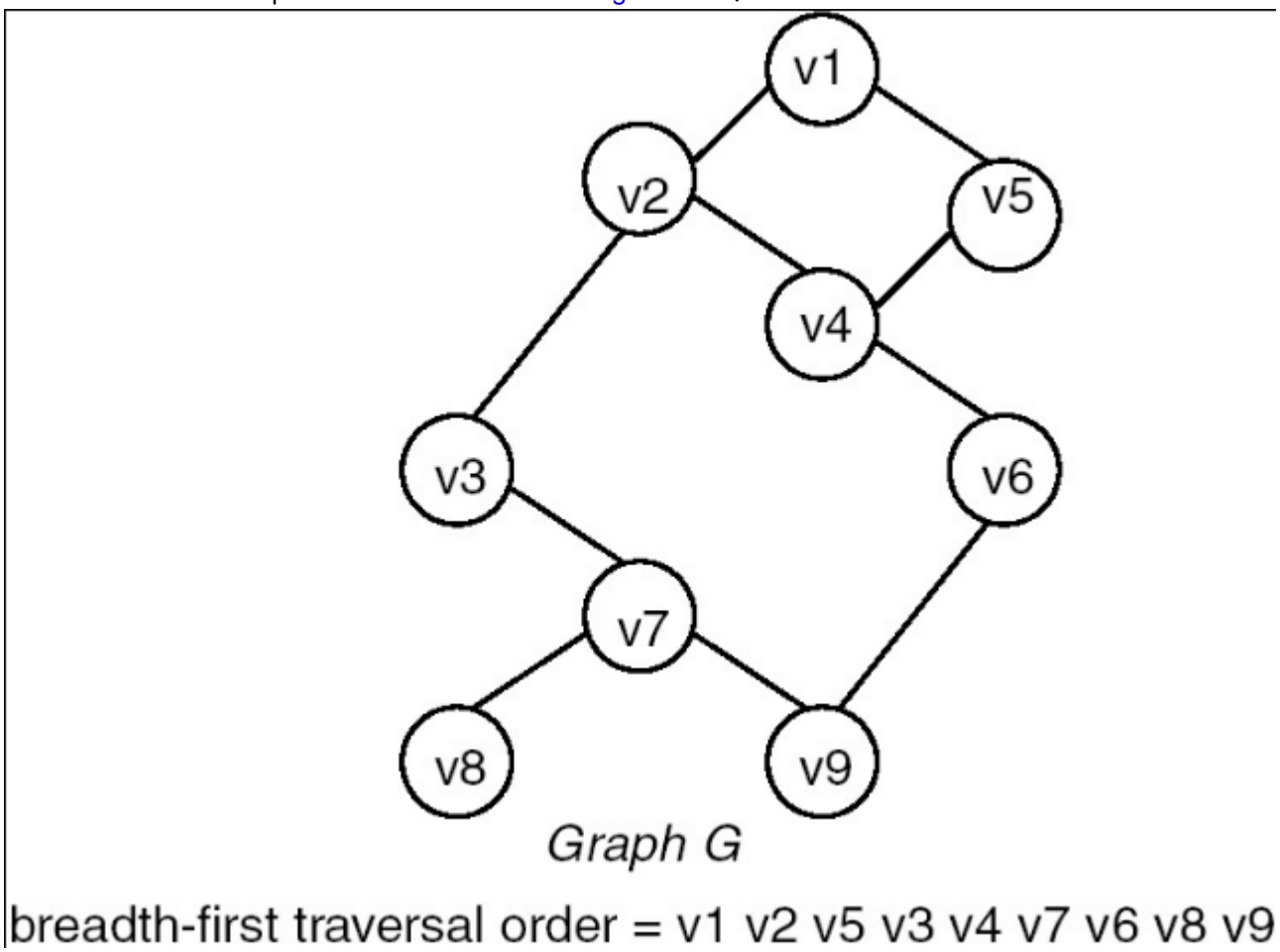

Figure 22.10: Breadth-first traversal of graph G starting at vertex v1.

Program

A complete C program for breadth-first traversal of a graph appears next. The program makes use of an array of *n* visited elements where *n* is the number of vertices of the graph. If `visited[i] = 1`, it means that the i th vertex is visited. The program also makes use of a queue and the procedures `addqueue` and `deletequeue` for adding a vertex to the queue and for deleting the vertex from the queue, respectively. Initially, we set `visited[i] = 0`.

```
#include <stdio.h>
#include <stdlib.h>
#define MAX 10
struct node
   {
     int data;
     struct node *link;
   };
```

ABC Amber CHM Converter Trial version, http://www.processtext.com/abcchm.html

```
void buildadjm(int adj[][MAX], int n)
   {
     int i,j;
     printf("enter adjacency matrix \n",i,j);
     for(i=0;i<n;i++)
         for(j=0;j<n;j++)
                 scanf("%d",&adj[i][j]);
   }

/* A function to insert a new node in queue*/
struct node *addqueue(struct node *p,int val)
{
   struct node *temp;
   if(p == NULL)
   {
      p = (struct node *) malloc(sizeof(struct node)); /* insert the new node
first node*/
      if(p == NULL)
         {
              printf("Cannot allocate\n");
              exit(0);
         }
     p->data = val;
     p->link=NULL;
  }
 else
 {
 temp= p;
while(temp->link != NULL)
{
 temp = temp->link;
}
   temp->link = (struct node*)malloc(sizeof(struct node));
   temp = temp->link;
   if(temp == NULL)
        {
              printf("Cannot allocate\n");
              exit(0);
        }
   temp->data = val;
   temp->link = NULL;
}
return(p);
}
```

ABC Amber CHM Converter Trial version, http://www.processtext.com/abcchm.html

```
struct node *deleteq(struct node *p,int *val)
{  struct node *temp;
   if(p == NULL)
   {
        printf("queue is empty\n");
               return(NULL);
   }
    *val = p->data;
    temp = p;
    p = p->link;
    free(temp);
    return(p);
  }

void bfs(int adj[][MAX], int x,int visited[], int n, struct node **p)
{
    int y,j,k;
    *p = addqueue(*p,x);
    do{

            *p = deleteq(*p,&y);
            if(visited[y] == 0)
                 {
                      printf("\nnode visited = %d\t",y);
              visited[y] = 1;
                  for(j=0;j<n;j++)
              if((adj[y][j] ==1) && (visited[j] == 0))
                      *p = addqueue(*p,j);
               }

      }while((*p) != NULL);
}
void main()
   {
     int adj[MAX][MAX];

     int n;
     struct node *start=NULL;
     int i, visited[MAX];
     printf("enter the number of nodes in graph maximum = %d\n",MAX);
     scanf("%d",&n);
     buildadjm(adj,n);
     for(i=0; i<n; i++)
        visited[i] =0;
```

```
    for(i=0; i<n; i++)
      if(visited[i] ==0)
           bfs(adj,i,visited,n,&start);
   }
```

Example

Input and Output

Enter the number of nodes in graph maximum = 10 9

Enter adjacency matrix

```
0 1 0 0 1 0 0 0 0
1 0 1 1 0 0 0 0 0
0 1 0 0 0 0 1 0 0
0 1 0 0 1 1 0 0 0
1 0 0 1 0 0 0 0 0
0 0 0 1 0 0 0 0 1
0 0 1 0 0 0 0 1 1
0 0 0 0 0 0 1 0 0
0 0 0 0 0 1 1 0 0
node visited = 0
node visited = 1
node visited = 4
node visited = 2
node visited = 3
node visited = 6
node visited = 5
node visited = 7
node visited = 8
```

Previous Next

ABC Amber CHM Converter Trial version, http://www.processtext.com/abcchm.html

CONNECTED COMPONENT OF A GRAPH

Introduction

The *connected component* of a graph is a maximal subgraph of a given graph, which is connected. For example, consider the graph that follows.

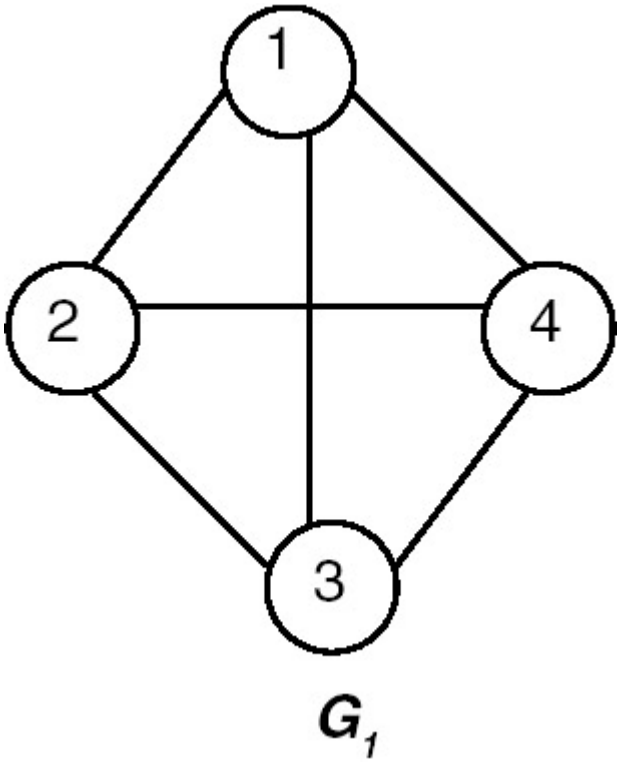

The connected component of the graph G1 is shown in Figure 22.11.

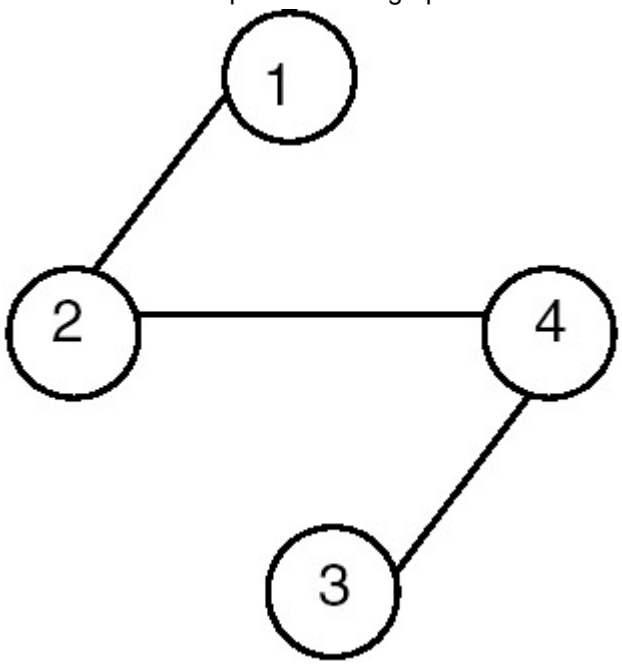

Figure 22.11: Connected component of G_1.

Strongly Connected Component

For a diagraph (directed graph), a *strongly connected component* is that component of the graph in which, for every pair of distinct vertices vi and vj, there is a directed path from vi to vj, and also a directed path from vj to

vi. For example, consider the diagraph shown in Figure 22.12.

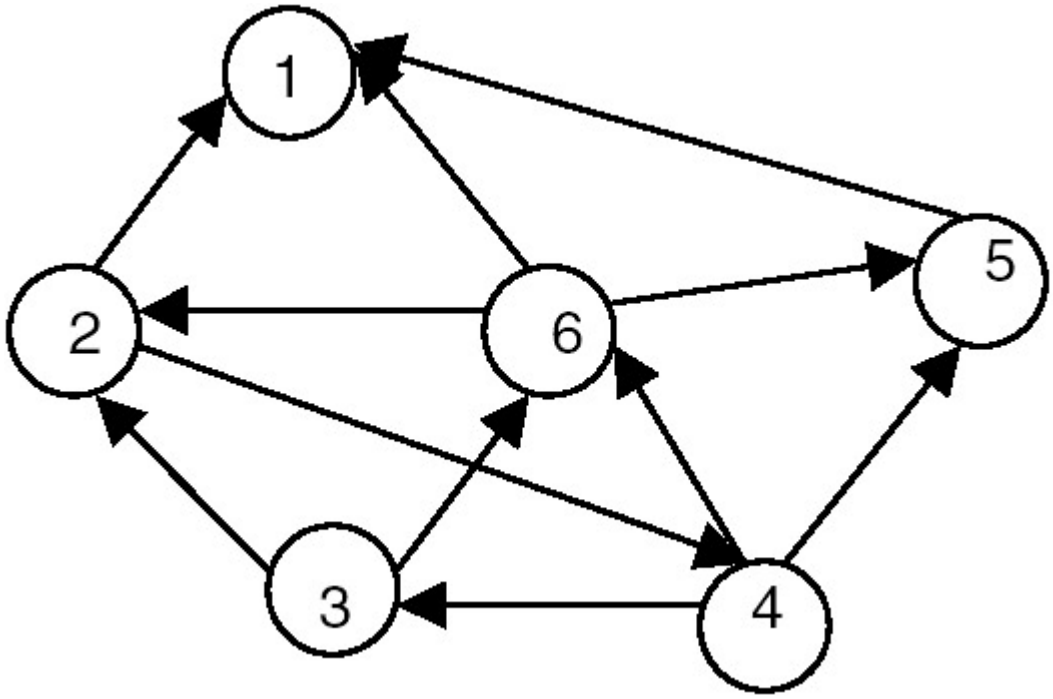

Figure 22.12: A diagraph.

The strongly connected components of the graph are shown in Figure 22.13.

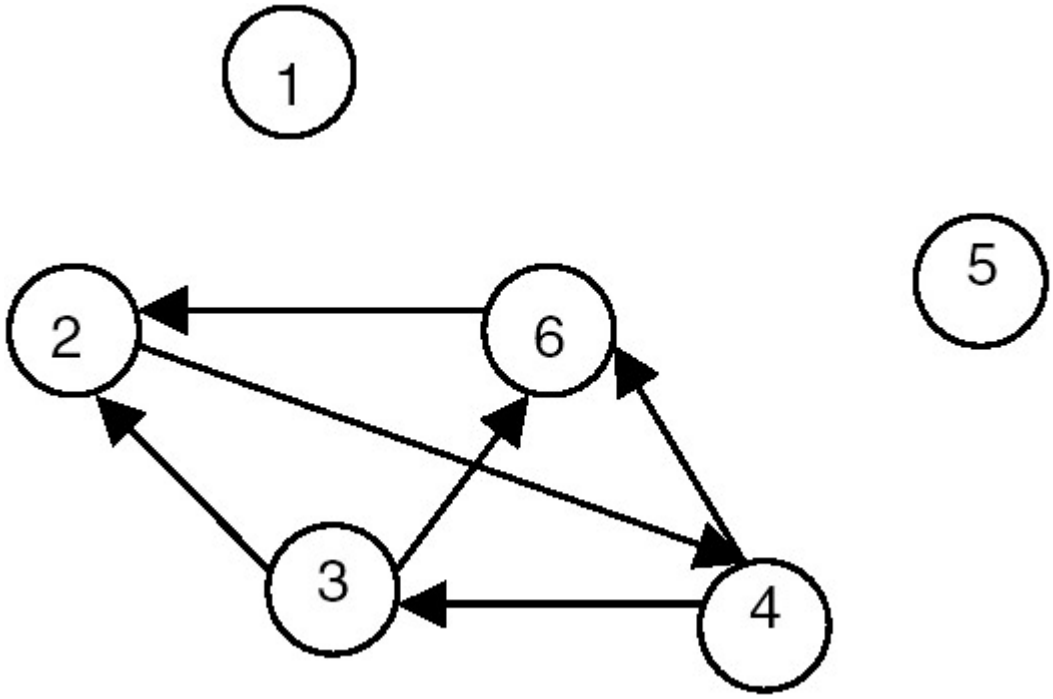

Figure 22.13: Strongly connected components of the graph shown in Figure 22.12.

Example

Is the following diagraph strongly connected?

ABC Amber CHM Converter Trial version, http://www.processtext.com/abcchm.html

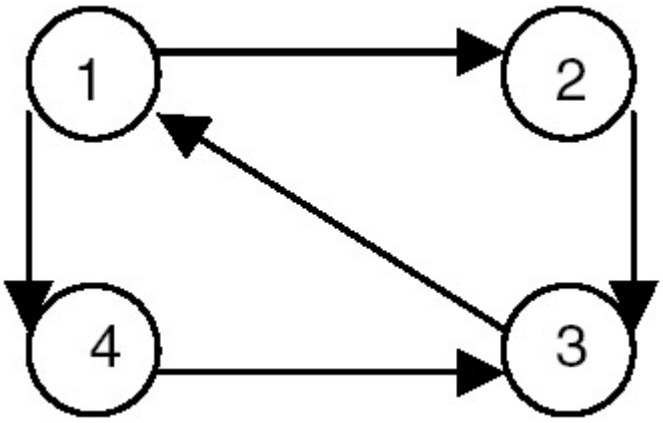

This table shows the possible pairs of vertices, and the forward and backward paths between them, for the previous graph:

PAIR OF VERTICES	FORWARD PATH	BACKWARD PATH
<1, 2>	1-2	2-3-4
<1,3>	1-2-3	3-1
<1,4>	1-4	4-3-1
<2,3>	2-3	3-1-2
<2,4>	2-3-1-4	4-3-1-2
<3,4>	3-1-4	4-3

Therefore, we see that between every pair of distinct vertices of the given graph there exists a forward as well as a backward path, so it is strongly connected.

Program

Write a function `dfs(v)` to traverse a graph in a depth-first manner starting from vertex v. Use this function to find connected components in the graph. Modify `dfs()` to produce a list of newly visited vertices. The graph is represented as adjacency lists.

```
#include <stdio.h>

#define MAXVERTICES 20
#define MAXEDGES 20

typedef enum {FALSE, TRUE, TRISTATE} bool;
typedef struct node node;

struct node {
   int dst;
   node *next;
};

void printGraph( node *graph[], int nvert ) {
   /*
    * prints the graph.
```

ABC Amber CHM Converter Trial version, http://www.processtext.com/abcchm.html

```
    */
   int i, j;
   for( i=0; i<nvert; ++i ) {
       node *ptr;
       for( ptr=graph[i]; ptr; ptr=ptr->next )
           printf( "[%d] ", ptr->dst );
       printf( "\n" );
   }
}

void insertEdge( node **ptr, int dst ) {
    /*
     * insert a new node at the start.
     */
    node *newnode = (node *)malloc( sizeof(node) );
    newnode->dst = dst;
    newnode->next = *ptr;
    *ptr = newnode;
}

void buildGraph( node *graph[], int edges[2][MAXEDGES], int nedges ) {
    /*
     * fills graph as adjacency list from array edges.
     */
    int i;
    for( i=0; i<nedges; ++i ) {
        insertEdge( graph+edges[0][i], edges[1][i] );
        insertEdge( graph+edges[1][i], edges[0][i] ); // undirected graph.
    }
}

void dfs( int v, int *visited, node *graph[] ) {
    /*
     * recursively traverse graph from v using visited.
     * and mark all the vertices that come in dfs path to TRISTATE.
     */
    node *ptr;

    visited[v] = TRISTATE;
    //printf( "%d \n", v );
    for( ptr=graph[v]; ptr; ptr=ptr->next )
       if( visited[ ptr->dst ] == FALSE )
           dfs( ptr->dst, visited, graph );
}
```

ABC Amber CHM Converter Trial version, http://www.processtext.com/abcchm.html

```
void printSetTristate( int *visited, int nvert ) {
    /*
     * prints all vertices of visited which are TRISTATE.
     * and set them to TRUE.
     */
    int i;

    for( i=0; i<nvert; ++i )
       if( visited[i] == TRISTATE ) {
           printf( "%d ", i );
           visited[i] = TRUE;
       }
    printf( "\n\n" );
}

void compINC(node *graph[], int nvert) {
    /*
     * prints all connected components of graph represented using INC lists.
     */
    int *visited;
    int i;

    visited = (int *)malloc( nvert*sizeof(int) );
    for( i=0; i<nvert; ++i )
        visited[i] = FALSE;

    for( i=0; i<nvert; ++i )
        if( visited[i] == FALSE ) {
            dfs( i, visited, graph );
            // print all vertices which are TRISTATE.
            // and mark them to TRUE.
            printSetTristate( visited, nvert );
       }
   free( visited );
}

int main() {
    int edges[][MAXEDGES] = { {0,2,4,5,5,4},
                              {1,1,3,4,6,6}
                            };
    int nvert = 7; // no of vertices.
    int nedges = 6; // no of edges in the graph.
    node **graph = (node **)calloc( nvert, sizeof(node *) );
```

```
    buildGraph( graph, edges, nedges );
    printGraph( graph, nvert );
    compINC( graph, nvert );

    return 0;
}
```

Explanation

1. The graph is represented as adjacency lists. The graph contains an array of n pointers where n is the number of vertices in the graph. Each entry i in the array contains a list of vertices to which i is connected. For example, if the graph is as shown in the first diagram, the adjacency lists for the graph are as shown in the subsequent diagram.

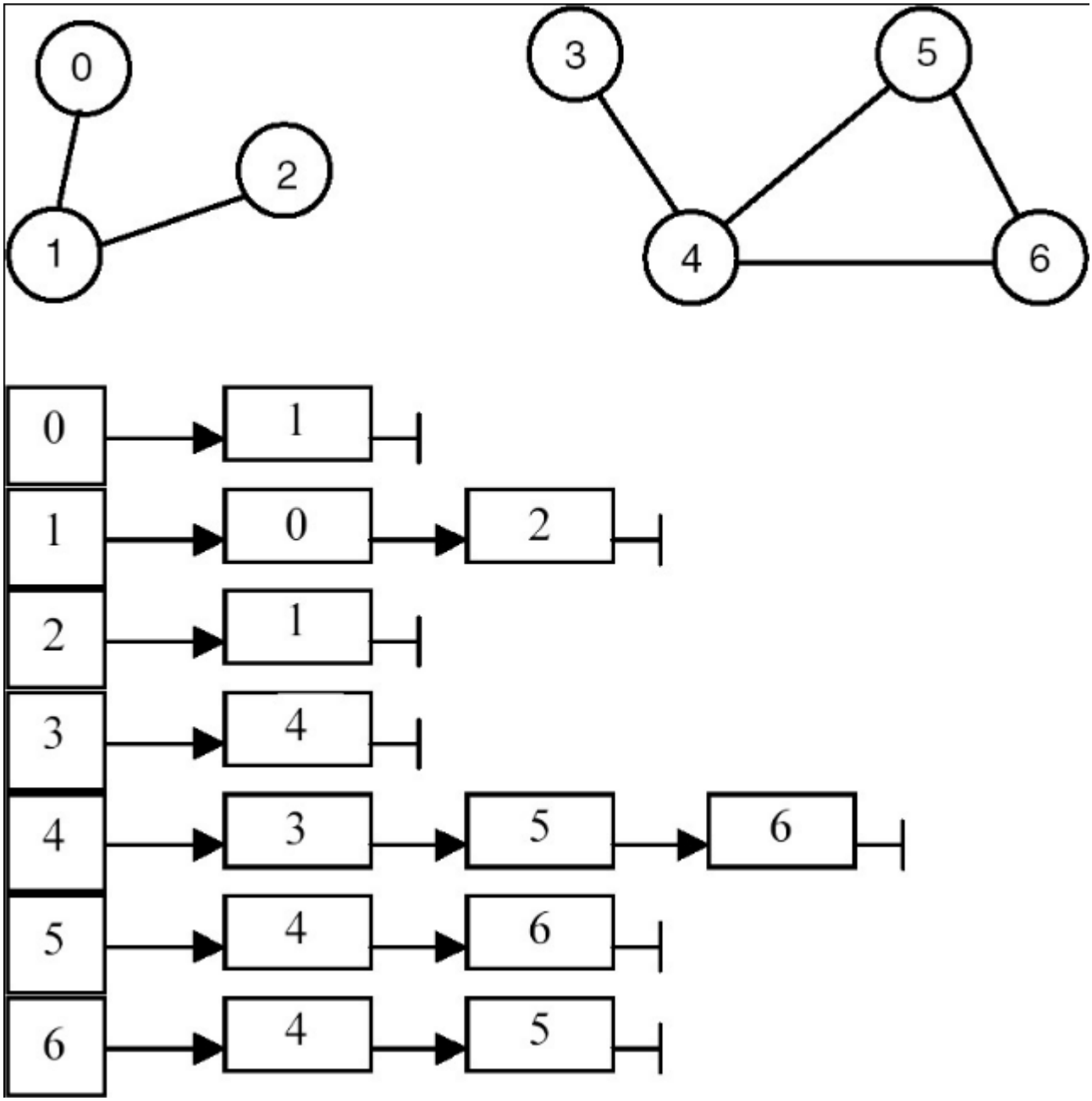

Each node in list `i` contains a vertex to which `i` is connected.

2. `dfs(v)` is implemented recursively. A Boolean vector `visited[]` is maintained whose entries are initially all `FALSE`. `dfs(v)` marks v as visited by making `visited[v] = TRUE`. It then finds all the adjacent nodes of v and starts `dfs()` from those nodes that have not yet been

visited. For example, if `dfs(v)` is called with `v == 0`, it marks 0 and then it traverses the adjacency list `graph[0]` and calls `dfs(1)`. This marks 1 and traverses the adjacency list `graph[1]`. But since 0 is already marked, `dfs(2)` is called. It marks `2` and starts traversal of `graph[2]`. But since 1 is marked, it returns. All the previous invocations return as there are no nodes being considered in the lists. Thus, the marked vertices are {0, 1, 2}.

3. `compINC()` is a function that finds all the connected components of a graph. It maintains a local copy of the vector `visited[]` and passes it as a parameter to `dfs(v)`. `compINC()` passes that vertex as a parameter to `dfs()` that has not yet been visited. Thus each invocation of `dfs()` finds one connected component of the graph.
4. In order to modify `dfs()` to produce a list of newly visited vertices, we tag the vertices visited using `dfs()` as `TRISTATE`. In `compINC()`, all these `TRISTATE` vertices will form one connected component. This status is then converted to `TRUE`. The next invocation to `dfs()` returns another set of vertices tagged as `TRISTATE`, which forms another connected component and so on.

For example, in the previous program, first all vertices are tagged as `FALSE`. After the invocation of `dfs(0)`, the vertices tagged as `TRISTATE` are {0, 1, 2}. These are output and their tags are changed from `TRISTATE` to `TRUE`. The next invocation of `dfs(3)` tags vertices {3, 4, 5, 6} as `TRISTATE`. These are then output and their tags are changed from `TRISTATE` to `TRUE`. Since there is no vertex remaining whose tag is `FALSE`, the algorithm stops.

Points to Remember

1. All the reachable vertices can be traversed from a source vertex by using depth-first search.
2. The data representation (a graph in this case) should be such that it should make algorithms operate on the data efficiently. Being represented as adjacency lists, we could easily traverse the list to get the vertices adjacent to a particular vertex.
3. Note how a simple recursive procedure solves the problem of finding all the reachable vertices from a vertex.
4. Note the use of descriptive words such as `FALSE`, `TRUE` and `TRISTATE`, rather than integers 0, 1 and 2. It makes the program easily understandable.

Previous Next

ABC Amber CHM Converter Trial version, http://www.processtext.com/abcchm.html

DEPTH-FIRST SPANNING TREE AND BREADTH-FIRST SPANNING TREE

Introduction

If graph G is connected, the edges of G can be partitioned into two disjointed sets. One is a set of tree edges, which we denote by set T, and the other is a set of back edges, which we denote by B. The tree edges are precisely those edges that are followed during the depth-first traversal or during the breadth-first traversal of graph G. If we consider only the tree edges, we get a subgraph of G containing all the vertices of G, and this subgraph is a tree called *spanning tree* of the graph G. For example, consider the graph shown in Figure 22.14.

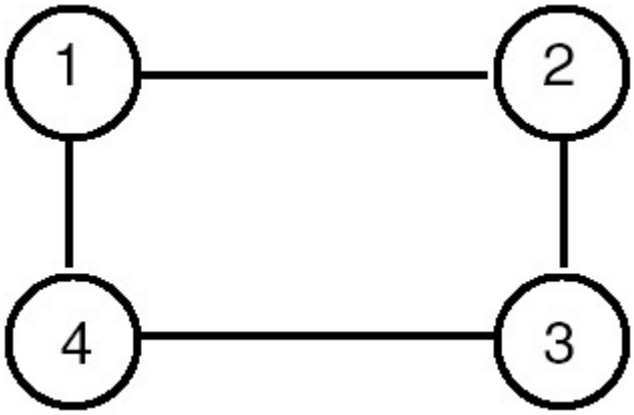

Figure 22.14: Graph G.

One of the depth-first traversal orders for this tree is 1-2-3-4, so the tree edges are (1,2), (2,3) and (3,4). Therefore, one of the spanning trees obtained by using depth-first traversal of the graph of Figure 22.14 is shown in Figure 22.15.

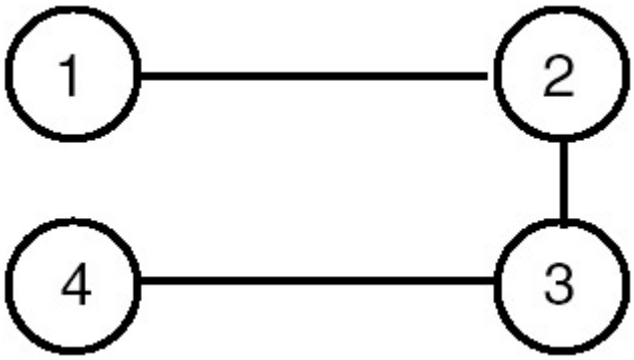

Figure 22.15: Depth first spanning tree of the graph of Figure 22.14.

Similarly, one of the breadth-first traversal orders for this tree is 1-2-4-3, so the tree edges are (1,2), (1,4) and (4,3). Therefore, one of the spanning trees obtained using breadth-first traversal of the graph of Figure 22.14 is shown in Figure 22.16.

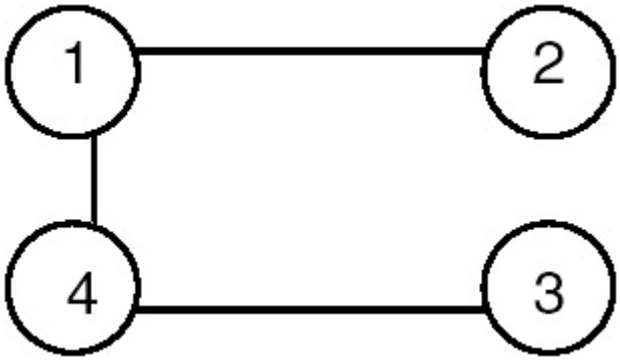

Figure 22.16: Breadth-first spanning tree of the graph of Figure 22.14.

The algorithm for obtaining the depth-first spanning tree (dfst) appears next.

```
T = f; {initially set of tree nodes is empty}
dfst( v : node);
{
   if (visited[v] = false)
   {
      visited[v] = true;
      for every adjacent i of v do
      {
            T = T È {(v,i)}
            dfst(i);
      }
   }
}
```

If a graph G is not connected, the tree edges, which are precisely those edges followed during the depth-first, traversal of the graph G, constitute the depth-first *spanning forest*. The depth-first spanning forest will be made of trees, each of which is one of the connected components of graph G.

When a graph G is directed, the tree edges, which are precisely those edges followed during the depth-first traversal of the graph G, form a depth-first spanning forest for G. In addition to this, there are three other types of edges. These are called *back edges, forward edges*, and *cross edges*. An edge A →B is called a back edge, if B is an ancestor of A in the spanning forest. A non-tree edge that goes from a vertex to a proper descendant is called a forward edge. An edge which goes from a vertex to another vertex that is neither an ancestor nor a descendant is called a cross edge. An edge from a vertex to itself is a back edge. For example, consider the directed graph G shown in Figure 22.17.

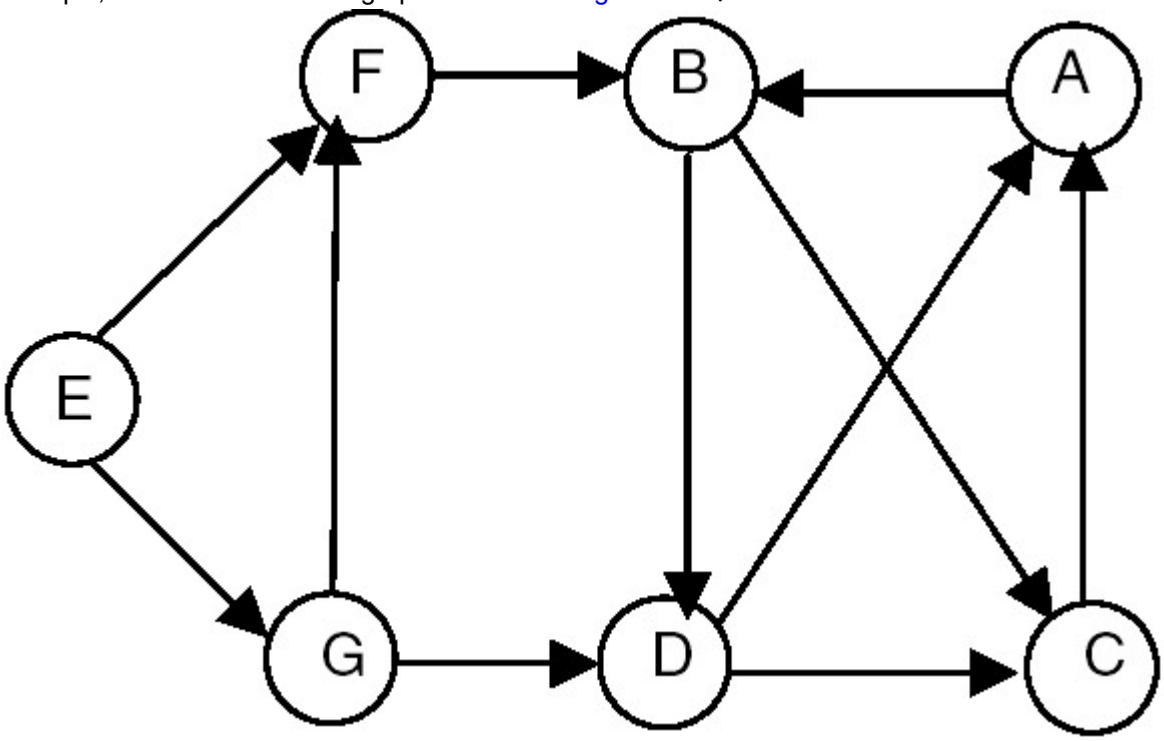

Figure 22.17: A directed graph G.

The depth-first spanning forest for graph G of Figure 22.17 is shown in Figure 22.18.

ABC Amber CHM Converter Trial version, http://www.processtext.com/abcchm.html

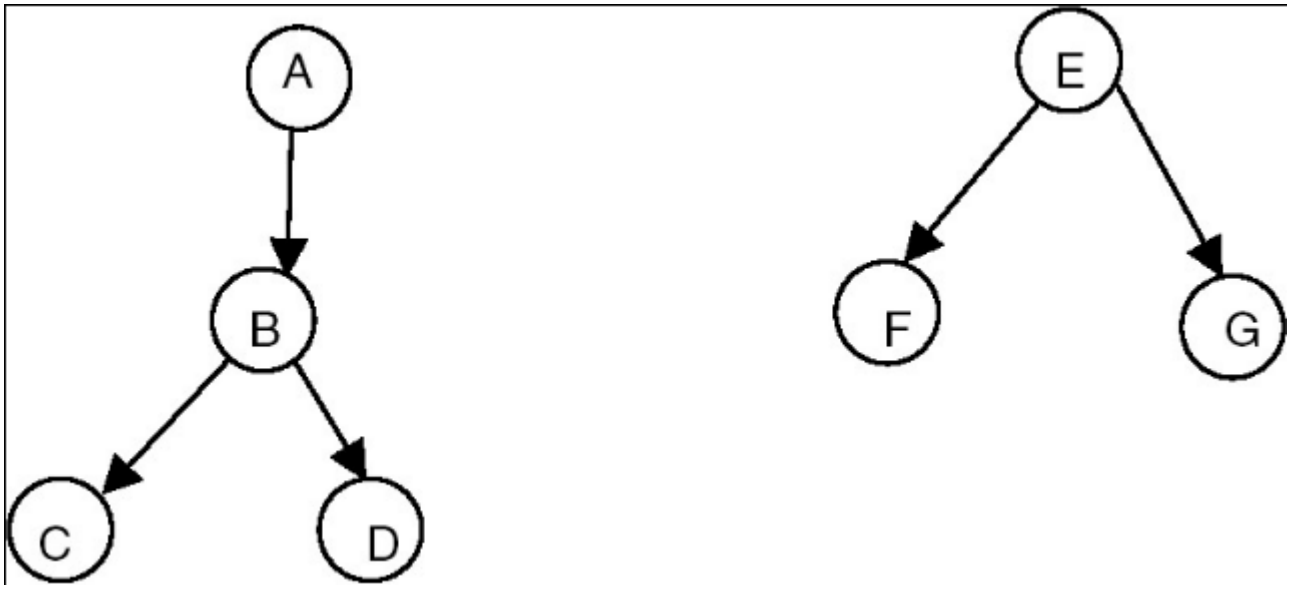

Figure 22.18: Depth-first spanning forest for the graph G of Figure 22.17.

In graph G of Figure 22.17, the edges such as C → A and D → A are the back edges, the edges such as D → C and G → D are cross edges.

Example

Consider the graph shown in Figure 22.19.

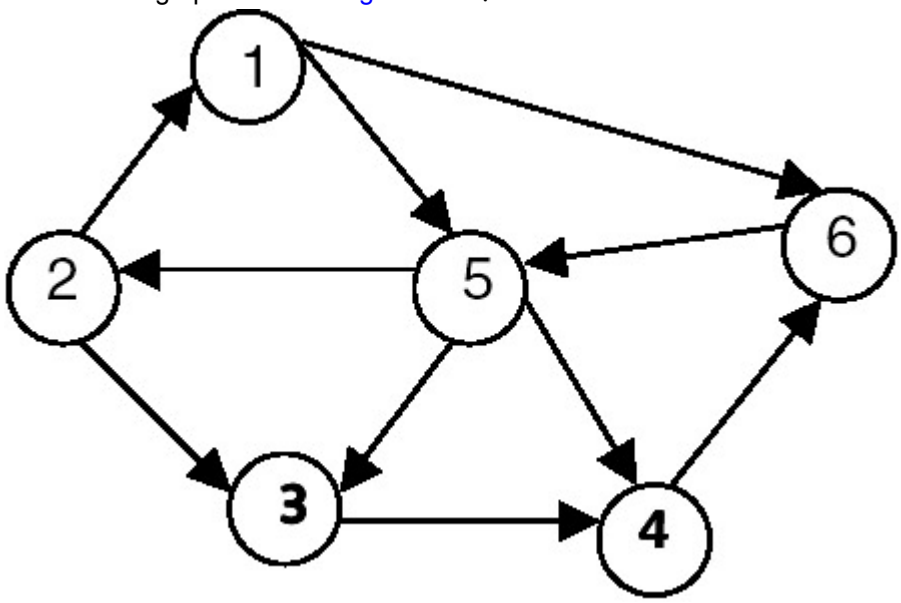

Figure 22.19: A graph G.

If we apply the procedure dfst to this graph, one of the depth-first spanning trees that we get by starting with vertex 1 is shown in Figure 22.20.

ABC Amber CHM Converter Trial version, http://www.processtext.com/abcchm.html

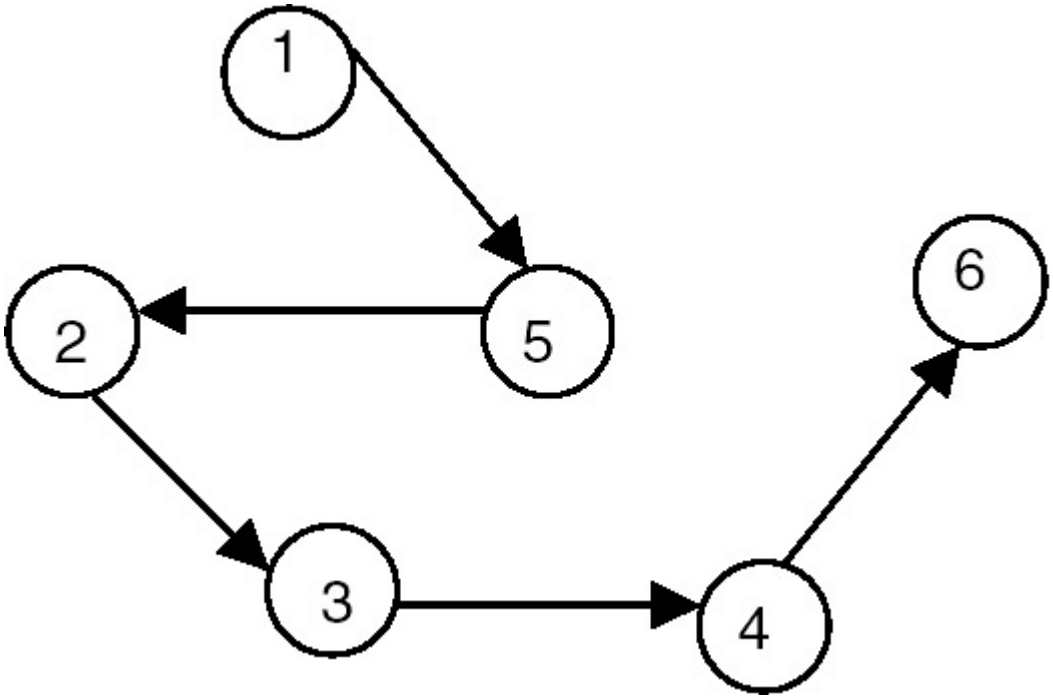

Figure 22.20: Depth-first spanning tree of the graph G of Figure 22.19.

Previous Next

ABC Amber CHM Converter Trial version, http://www.processtext.com/abcchm.html

MINIMUM-COST SPANNING TREE

Introduction

When the edges of the graph have weights representing the cost in some suitable terms, we can obtain that spanning tree of a graph whose cost is minimum in terms of the weights of the edges. For this, we start with the edge with the minimum-cost/weight, add it to set T, and mark it as visited. We next consider the edge with minimum-cost that is not yet visited, add it to T, and mark it as visited. While adding an edge to the set T, we first check whether both the vertices of the edge are visited; if they are, we do not add to the set T, because it will form a cycle. For example, consider the graph shown in Figure 22.21.

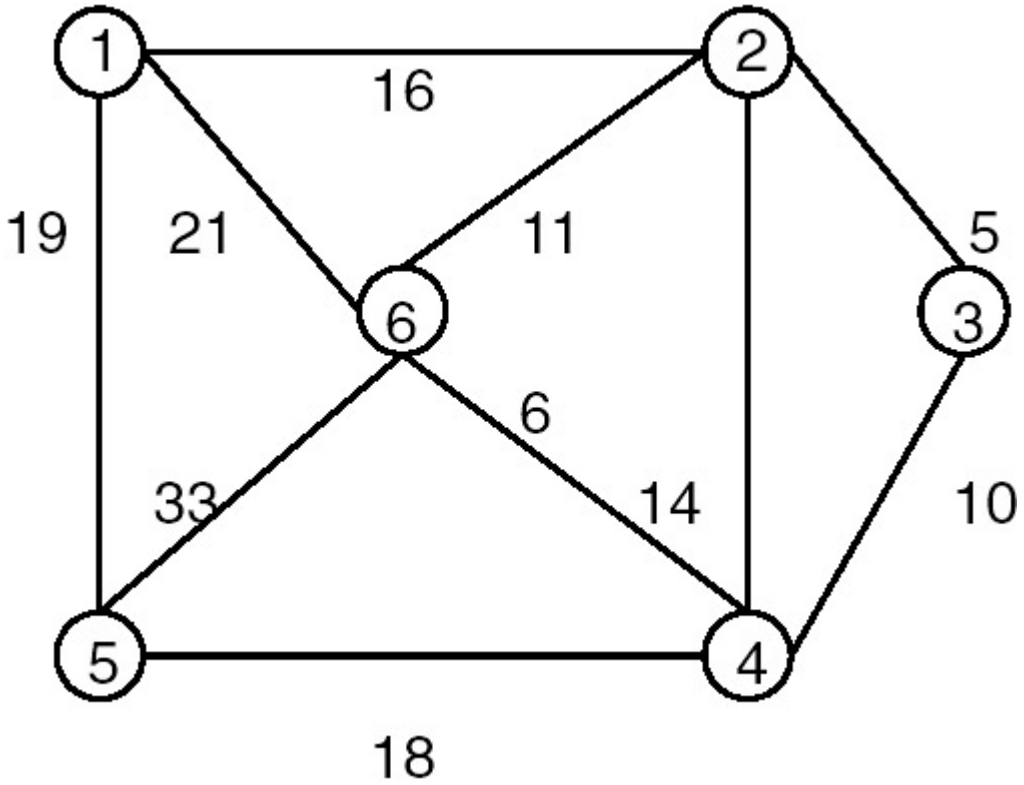

Figure 22.21: A graph G.

The *minimum-cost spanning tree* of the graph of Figure 22.21 is shown in Figure 22.22.

ABC Amber CHM Converter Trial version, http://www.processtext.com/abcchm.html

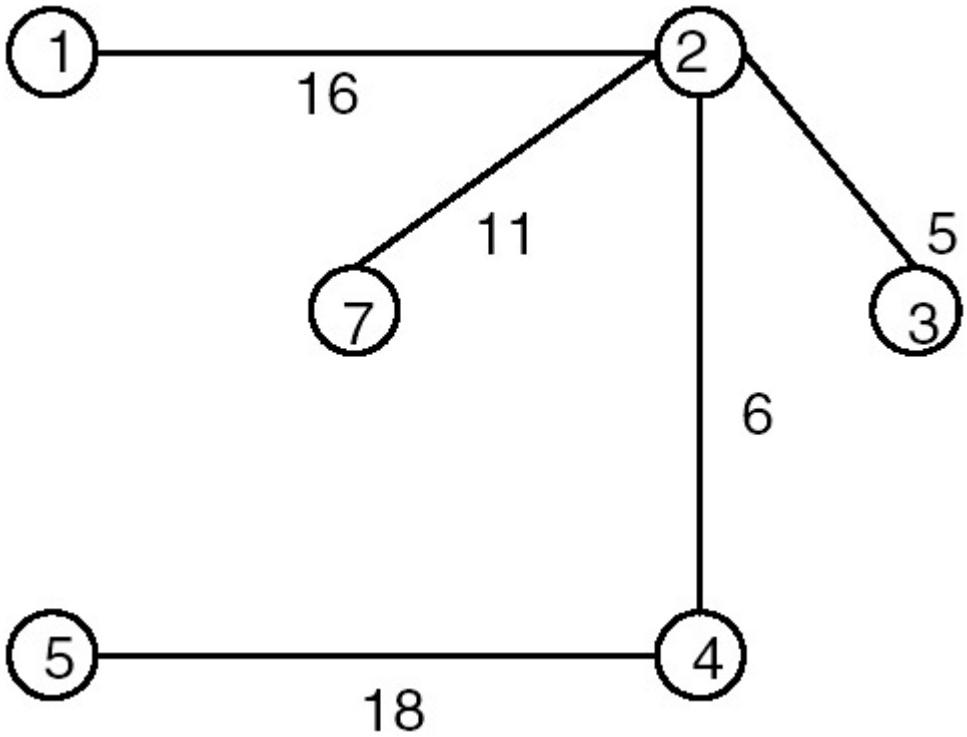

Figure 22.22: The minimum-cost spanning tree of graph G of Figure 22.21.

MST Property

Let G = (V,E) be a connected graph with a cost function defined on the edges. Let U be some proper subset of the set of vertices V. If (u,v) is an edge of lowest cost such that u is in U, and v is in V-U, there is a minimum-cost spanning tree that includes edge (u,v). Many of the methods of constructing a minimum-cost spanning tree use the following properties.

Prim's Algorithm

Let G = (V,E) be a weighted graph, and suppose V = {1,2,…,n}. The Prim's algorithm begins with a set U initialized to {1}, and at each stage finds the shortest edge (u,v) that connects u in U and v in V-U, and then adds v to U. It repeats this step until U = V.

```
mcost(G is a graph; T is a set of edges)
   U is a set of vertices
   u,v are vertices;
{
   T= ô
   U = {1}
   while U '" V
   {
```

Find the lowest-cost edge (u,v) such that u is in U and v is in V-U

```
      add (u,v) to T
      add v to U
   }
}
```

Program

ABC Amber CHM Converter Trial version, http://www.processtext.com/abcchm.html

The following program can be used to find the minimum spanning tree of a graph.

```
#include <stdio.h>

#define MAXVERTICES 10
#define MAXEDGES 20
typedef enum {FALSE, TRUE} bool;

int getNVert(int edges[][3], int nedges) {
   /*
    * returns no of vertices = maxvertex + 1;
    */
   int nvert = -1;
   int j;

   for( j=0; j<nedges; ++j ) {
      if( edges[j][0] > nvert )
             nvert = edges[j][0];

      if( edges[j][1] > nvert )
             nvert = edges[j][1];
   }
   return ++nvert;         // no of vertices = maxvertex + 1;
}

bool isPresent(int edges[][3], int nedges, int v) {
   /*
    * checks whether v has been included in the spanning tree.
    * thus we see whether there is an edge incident on v which has
    * a negative cost. negative cost signifies that the edge has been
    * included in the spanning tree.
    */

   int j;
   for(j=0; j<nedges; ++j)
      if(edges[j][2] < 0 && (edges[j][0] == v || edges[j][1] == v))
               return TRUE;

   return FALSE;
}

void spanning(int edges[][3], int nedges) {
   /*
```

ABC Amber CHM Converter Trial version, http://www.processtext.com/abcchm.html

```
    * finds a spanning tree of the graph having edges.
    * uses kruskal's method.
    * assumes all costs to be positive.
    */
   int i, j;
   int tv1, tv2, tcost;
   int nspanedges = 0;
   int nvert = getNVert(edges, nedges);

   // sort edges on cost.
   for(i=0; i<nedges-1; ++i)
      for(j=i; j<nedges; ++j)
             if(edges[i][2] > edges[j][2]) {
                    tv1 = edges[i][0]; tv2 = edges[i][1]; tcost = edges[i][2];
                    edges[i][0] = edges[j][0]; edges[i][1] = edges[j][1];
edges[i][2] = edges[j][2];
                    edges[j][0] = tv1; edges[j][1] = tv2; edges[j][2] = tcost;
                  }
    for(j=0; j<nedges-1; ++j) {
        // consider edge j connecting vertices v1 and v2.
        int v1 = edges[j][0];
        int v2 = edges[j][1];

         // check whether it forms a cycle in the up until now formed spanning
tree.
         // checking can be done easily by checking whether both v1 and v2 are
in
        // the current spanning tree!
        if(isPresent(edges, nedges, v1) && isPresent(edges, nedges, v2)) //
cycle.
                 printf("rejecting: %d %d %d...\n", edges[j][0], edges[j][1],
edges[j][2]);
   else {
           edges[j][2] = -edges[j][2];
           printf("%d %d %d.\n", edges[j][0], edges[j][1], -edges[j][2]);
           if(++nspanedges == nvert-1)
                   return;
         }
   }
   printf("No spanning tree exists for the graph.\n");
}

main() {
    int edges[][3] = {
                                {0,1,16},
```

ABC Amber CHM Converter Trial version, http://www.processtext.com/abcchm.html

```
                                    {0,4,19},
                                    {0,5,21},
                                    {1,2,5},
                                    {1,3,6},
                                    {1,5,11},
                                    {2,3,10},
                                    {3,4,18},
                                    {3,5,14},
                                    {4,5,33}
                              };
 int nedges = sizeof(edges)/3/sizeof(int);
 spanning(edges, nedges);

 return 0;
}
```

Explanation

1. A tree consisting solely of edges in a graph G, and including all vertices in G, is called a spanning tree. A minimum spanning tree of a weighted graph is the spanning tree with minimum total cost of its edges.

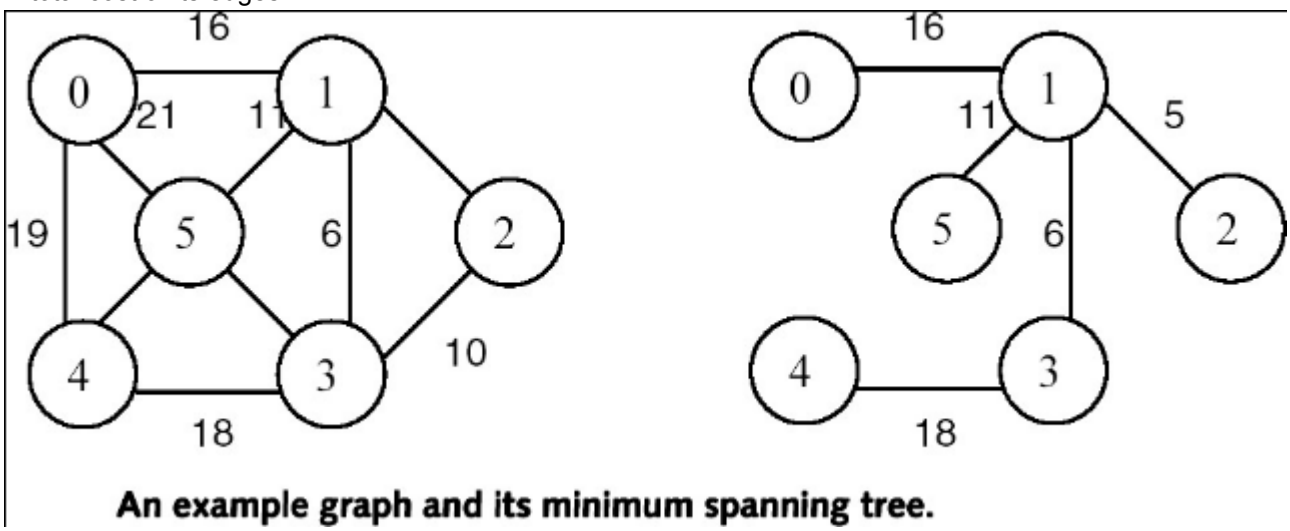

An example graph and its minimum spanning tree.

2. The graph is represented as an array of edges. Each entry in the array is a triplet representing an edge consisting of source vertex, destination vertex, and the cost associated with the edge. The method used in finding a minimum spanning tree is that given by Kruskal. In this approach, a minimum spanning tree T is built edge by edge. Edges are considered for inclusion in T in non-decreasing order of their costs. An edge is included if it does not form a cycle with the edges that are already in T. Since graph G is connected and has $n > 0$ vertices, exactly $n - 1$ edges will be selected for inclusion in T.
3. Kruskal's algorithm is as follows:
4.
5. `T={};  // empty set.`
6. `while T contains less than n-1 edges and E not empty do`
7. `  choose an edge (v, w) from E of lowest cost.`
8. `  delete (v, w) from E.`
9. `  if (v, w) does NOT create a cycle in T`
10. `  add (v, w) to T.`
11. `  else`
12. `  discard (v, w).`
13. `endwhile.`

```
if T contains less than n-1 edges
   print("no spanning tree exists for this graph.");
```

16. In order for the choice of the lowest-cost edge from E to become efficient, we sort the edge array over the cost of edge. To check whether an edge (v, w) forms a cycle, we simply need to check whether both v and w appear in any of the previously added edges in T. We assume that all the costs are positive and we make them negative to signify that the edge has been included in T.
17. Example:

For the example graph in item 1, the run of the algorithm goes as follows:

STEP	EDGE	COST	ACTION	SPANNING-TREE
0	—	—	—	{}.
1	(1, 2)	5	accept	{(1, 2)}.
2	(1, 3)	6	accept	{(1, 2), (1, 3)}.
3	(2, 3)	10	reject	{(1, 2), (1, 3)}.
4	(1, 5)	11	accept	{(1, 2), (1, 3), (1, 5)}.
5	(3, 5)	14	reject	{(1, 2), (1, 3), (1, 5)}.
6	(0, 1)	16	accept	{(1, 2), (1, 3), (1, 5), (0, 1)}.
7	(3, 4)	18	accept	{(1, 2), (1, 3), (1, 5), (0, 1), (3, 4)}.

Points to Remember

1. A minimum spanning tree of a weighted graph G is a tree that consists of edges solely from the edges of G, which covers all the vertices in G, and which has the minimum combined cost of its edges.
2. The complexity of Kruskal's method used for finding the minimum spanning tree of a graph G is O(eloge) where e is the number of edges in G.
3. Note that the union and find algorithms for set representation can be used for checking for cycle and inclusion of an edge in a set.
4. There can be multiple minimum spanning trees in a graph.

Application of Minimum-Cost Spanning Tree

A property of a spanning tree of a graph G is that a spanning tree is a minimal connected subgraph of G (by minimal, we mean the one with the fewest number of edges). Therefore, if nodes of G represent cities and the edges represent possible communication links connecting two cities, then the spanning trees of graph G represent all feasible choices of the communication network. If each edge has weight representing cost measured in some suitable terms (such as cost of construction or distance etc.), then the minimum-cost spanning tree of G is the selection of the required communication network.

Previous Next

ABC Amber CHM Converter Trial version, http://www.processtext.com/abcchm.html

DIRECTED ACYCLIC GRAPH (DAG)

Concept

A *directed acyclic graph* (DAG) is a directed graph with no cycles. A DAG represents more general relationships than trees but less general than arbitrary directed graphs. An example of a DAG is given in Figure 22.23.

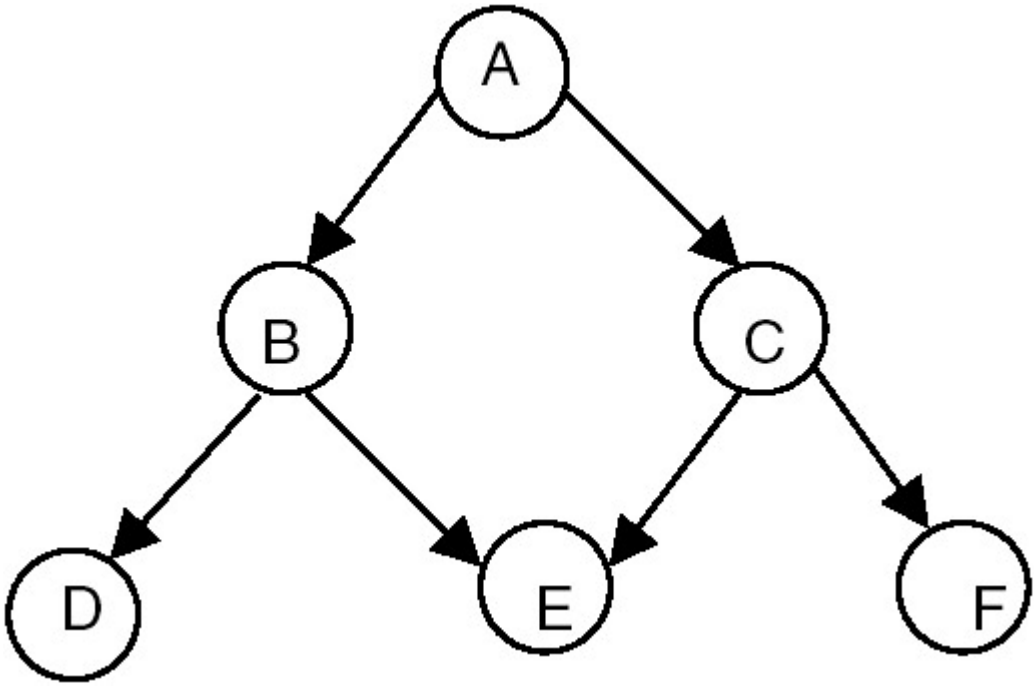

Figure 22.23: Directed acyclic graph.

DAGs are useful in representing the syntactic structure of arithmetic expressions with common sub-expressions. For example, consider the following expression:

$(a+b)*c + ((a+b + e)$

In this expression, the term $(a + b)$ is a common sub-expression, and therefore represented in the DAG by the vertices with more than one incoming edge, as shown in Figure 22.24.

ABC Amber CHM Converter Trial version, http://www.processtext.com/abcchm.html

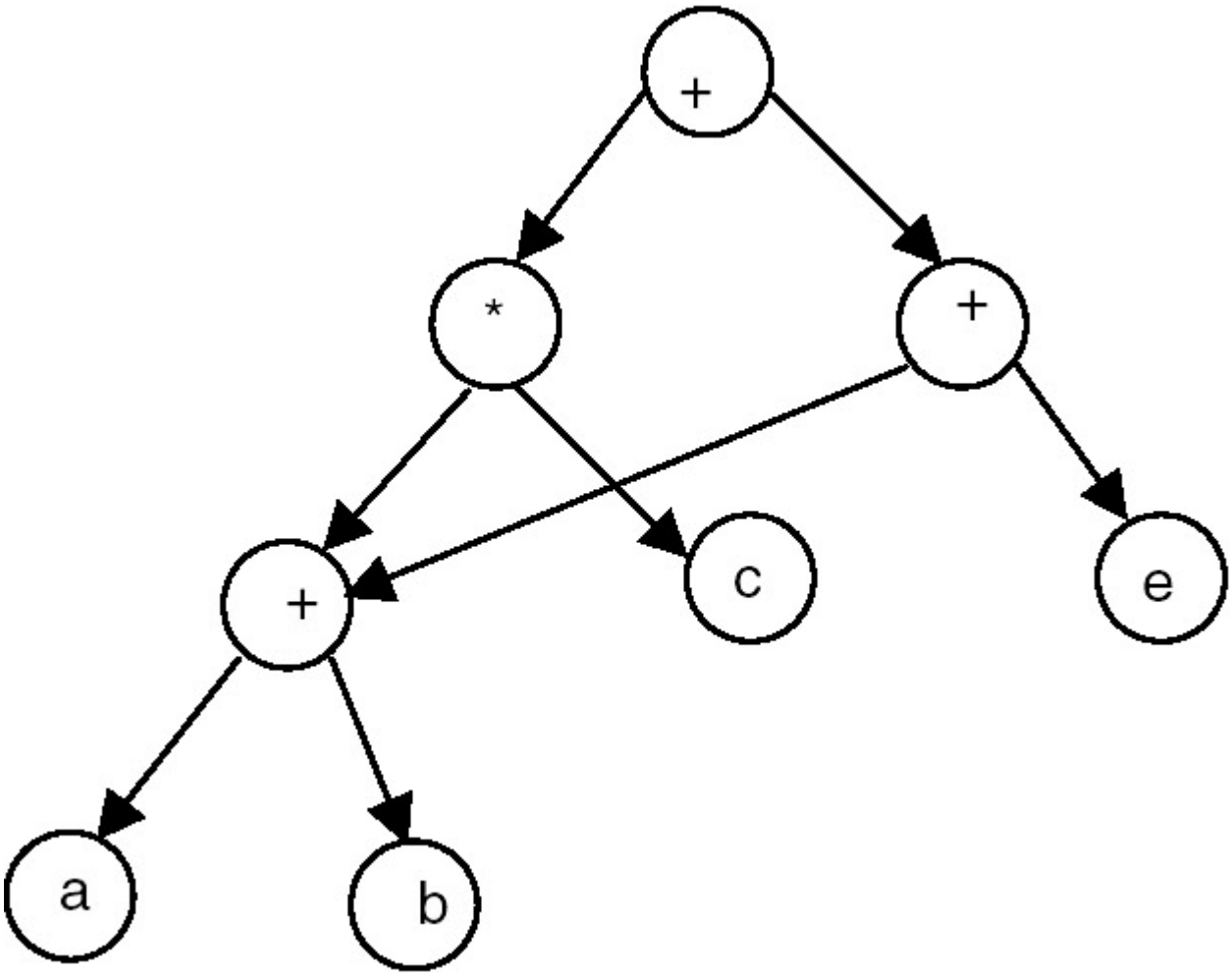

Figure 22.24: DAG representation of expression (a+b)*c +((a+b) + e).

Topological Sort of Directed Graph

A *topological sort* is a method for ordering the nodes of the directed graph G in which the nodes represent tasks or activities, and the edges represent precedence relations between nodes, that is, when the edges of the graph represent dependency among the node/vertices of graph G. It lists the vertices/nodes in such an order that a vertex *vi* gets listed only after all the vertices on which *vi* depends have been listed. For a topological sort to be feasible, it is required that the directed graph G not have any directed cycles. In other words, the graph G should be a DAG. This also means that the precedence relation defined by the edges of G must be irreflexive. The precedence relation defined by the edges of G is certainly transitive and so is a partial order. It starts with a vertex that does not have any predecessor and lists it. After that it logically deletes it from the graph and once again searches for that vertex that does not have any predecessor, and repeats the procedure. It does not give a unique order. For example, consider the directed graph shown in Figure 22.25.

ABC Amber CHM Converter Trial version, http://www.processtext.com/abcchm.html

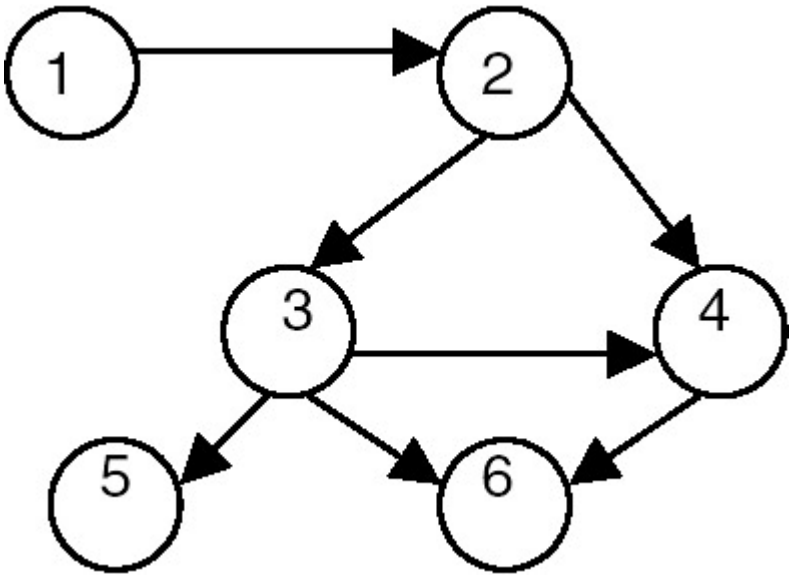

Figure 22.25: A graph G.

The topological sort of the graph in Figure 22.25 gives the following orders:

- 1-2-3-4-5-6
- 1-2-3-5-4-6
- 1-2-3-4-6-5

The algorithm for a topological sort is presented here:

```
while there exist a node
    {
        select a node which does not have any predecessor
        list the selected node
        delete it from the graph
     }
```

The procedure for a depth first search, with a print statement added to print the nodes, can also be used, as shown in the following program, to perform a topological sort. This algorithm prints the vertices accessible from *x* in reverse topological sort. This algorithm prints the vertices accessible from *x* in reverse topological order.

Program

Write a program to find the topological order of a diagraph G represented as adjacency lists.

```
#include <stdio.h>

#define N 11                // no of total vertices in the graph.

typedef enum {FALSE, TRUE} bool;
typedef struct node node;

struct node {
   int count;         // for arraynodes : in-degree.
                      // for listnodes : vertex no this vertex is connected to.
                      // if this node is out of graph : –1.
```

ABC Amber CHM Converter Trial version, http://www.processtext.com/abcchm.html

```
                    // if this has 0 indegree then it occurs in zerolist.
   node *next;
};

node graph[N];
node *zerolist;

void addToZerolist( int v ) {
    /*
     * adds v to zerolist as v has 0 predecessors.
     */
    node *ptr = (node *)malloc( sizeof(node) );
    ptr->count = v;
    ptr->next = zerolist;
    zerolist = ptr;
}

void buildGraph( int a[][2], int edges ) {
   /*
    * fills global graph with input given in a.
    * a[i][0] is src vertex and a[i][1] is dst vertex.
    */
   int i;

   // init graph.
   for( i=0; i<N; ++i ) {
       graph[i].count = 0;
       graph[i].next = NULL;
   }

   // now add the list entries.
   for( i=0; i<edges; ++i ) {
      // add new node to src list.
      node *ptr = (node *)malloc( sizeof(node) );
      ptr->count = a[i][1];
      ptr->next = graph[ a[i][0] ].next;
      graph[ a[i][0] ].next = ptr;
      // increase indegree of dst.
      graph[ a[i][1] ].count++;
   }

   // now create list of zero predecessors.
   zerolist = NULL;     // list of vertices having 0 predecessors.
   for( i=0; i<N; ++i )
```

ABC Amber CHM Converter Trial version, http://www.processtext.com/abcchm.html

```
        if( graph[i].count == 0 ) {
                addToZerolist(i);
        }
}

void printGraph() {
    int i;
    node *ptr;

    for( i=0; i<N; ++i ) {
        node *ptr;
        printf( "%d: pred=%d: ", i, graph[i].count );
        for( ptr=graph[i].next; ptr; ptr=ptr->next )
                printf( "%d ", ptr->count );
        printf( "\n" );
    }
    printf( "zerolist: " );
        for( ptr=zerolist; ptr; ptr=ptr->next )
            printf( "%d ", ptr->count );
        printf( "\n" );
    }

    int getZeroVertex() {
        /*
         * returns the vertex with zero predecessors.
         * if no such vertex then returns –1.
         */
        int v;
        node *ptr;

        if( zerolist == NULL )
            return –1;
        ptr = zerolist;
        v = ptr->count;
        zerolist = zerolist->next;
        free(ptr);

        return v;
    }

    void removeVertex( int v ) {
        /*
         * deletes vertex v and its outgoing edges from global graph.
         */
```

ABC Amber CHM Converter Trial version, http://www.processtext.com/abcchm.html

```
        node *ptr;
        graph[v].count = –1;
        // free the list graph[v].next.
        for( ptr=graph[v].next; ptr; ptr=ptr->next ) {
           if( graph[ ptr->count ].count > 0 ) // normal nodes.
                  graph[ ptr->count ].count-;
           if( graph[ ptr->count ].count == 0 )          // this is NOT else of
above if.
                  addToZerolist( ptr->count );
        }
}

void topsort( int nvert ) {
    /*
     * finds recursively topological order of global graph.
     * nvert vertices of graph are needed to be ordered.
     */
    int v;

    if( nvert > 0 ) {
       v = getZeroVertex();
       if( v == –1 ) {       // no such vertex.
               fprintf( stderr, "graph contains a cycle.\n" );
               return;
       }
       printf( "%d.\n", v );
       removeVertex(v);
       topsort( nvert-1 );
   }
}

int main() {
    int a[][2] = {
                            {0,1},
                            {0,3},
                            {0,2},
                            {1,4},
                            {2,4},
                            {2,5},
                            {3,4},
                            {3,5}
                        };
    buildGraph( a, 8 );
    printGraph();
```

```
    topsort(N);
}
```

Explanation

1. A linear ordering of vertices of a diagraph G, with the property that if i is a predecessor of j then i precedes j in linear order, is called a topological order of G.
2. The diagraph G is maintained as adjacency lists. In this representation, G is an array `graph[0..n-1]` where each element `graph[i]` is a linked list of vertices. Vertex i is connected to, and n is the number of, vertices in G.
3. We also maintain a `zerolist`, which is a list of vertices that have zero predecessors. The necessity of this list will be clear in the algorithm shown in number four of this explanation.
4. The algorithm for topological sort is:
5.
6. `topsort(n) {`
7. `  if( n > 0 ) {`
8. `if every vertex has a predecessor then`
9. `  error( "graph contains a cycle." ).`
10. `pick a vertex v that has no predecessors. // getZeroVertex()`
11. `output v.`
12. `delete v and all the edges leading out of v in the graph. // removeVertex()`
13. `topsort(n-1).`
14. `  }`
15. `}`
16. The algorithm `topsort()` is tail-recursive. From `zerolist`, it removes a vertex v containing zero predecessors and outputs it. This vertex v has no predecessors in G or all its predecessors have already been output. Thus all the vertices in `zerolist` are the candidates for the next output. After v is output, all the vertices to which v points may become the candidates for the next output. Thus we remove all the edges starting from v and rerun `topsort()` over the remaining vertices.
17. See the following example of a diagraph.

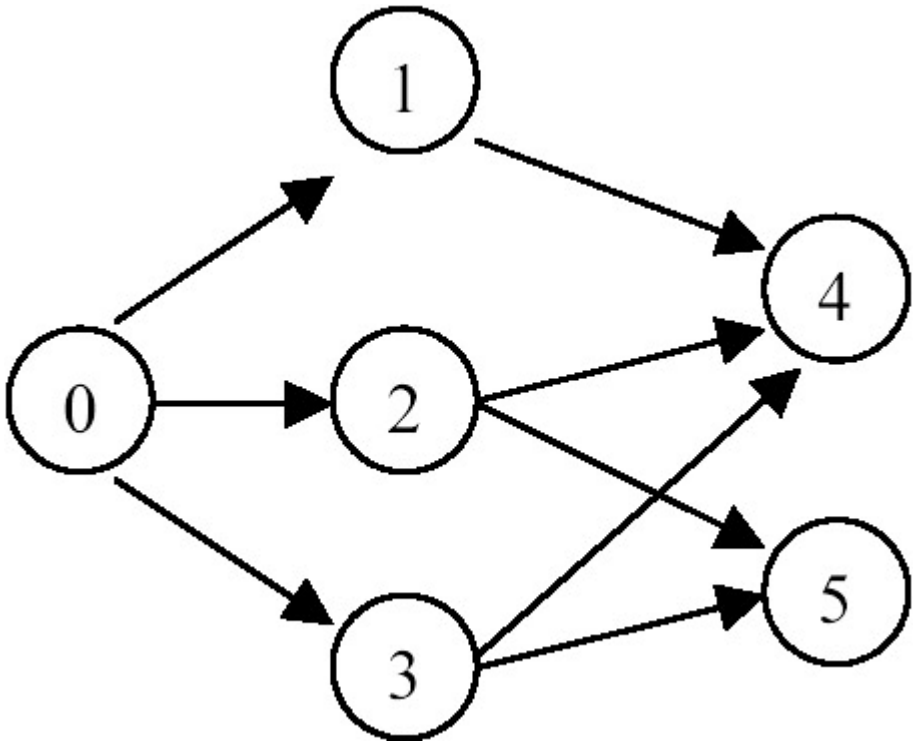

STEP	ZEROLIST	OUTPUT
0	{0}	nil

ABC Amber CHM Converter Trial version, http://www.processtext.com/abcchm.html

STEP	ZEROLIST	OUTPUT
1	{1, 2, 3}	0
2	{2, 3}	1
3	{3}	2
4	{4,5}	3
5	{5}	4
6	{}	5

Points to Remember

1. A linear ordering of vertices of a diagraph G, with the property that if i is a predecessor of j then i precedes j in the linear ordering, is called a topological order of G.
2. The complexity of topological order is O(*n*+*e*) where *n* is the number of vertices and *e* is the number of edges in the diagraph.
3. Removal of an edge results in a decrease in the predecessor count of the destination vertex. If this count reaches 0, the vertex should be inserted in the `zerolist`.
4. By maintaining a list of vertices with zero predecessors, the computing time of the algorithm decreases.
5. The algorithm is therefore a total time of O(*e*), if graph G is represented by an adjacency list, and O(n^2) if graph G is represented by an adjacency matrix.

General Comments on Graphs

1. A graph is a structure that is often used to model the arbitrary relationships among the data objects while solving many problems.
2. A graph is a structure made of two components: a set of vertices V, and the set of edges E. Therefore, a graph is G = (V,E), where G is a graph.
3. The graph may be directed or undirected. When the graph is directed, every edge of the graph is an ordered pair of vertices connected by the edge.
4. When the graph is undirected, every edge of the graph is an unordered pair of vertices connected by the edge.
5. The maximum number of edges in an undirected graph with n vertices is $n(n - 1)/2$, whereas in the case of a directed graph, it is $n(n - 1)$.
6. Adjacency matrices and adjacency lists are used to represent graphs.
7. A graph can be traversed by using either the depth first traversal or the breadth first traversal.
8. When a graph is traversed by visiting in the forward (deeper) direction as long as possible, the traversal is called depth first traversal.
9. When a graph is traversed by visiting all the adjacencies of a node/vertex first, the traversal is called breadth first traversal.
10. A connected component of a graph is a maximal subgraph of a given graph that is connected.
11. A DAG is an important data structure used for representing syntactic structure of expressions with common subexpressions.
12. A DAG is also used in representing partial orders.
13. A topological sort lists the vertices in such an order that if a vertex vi is a predecessor of vertex vj then vi precedes vj in the linear ordering.
14. Topological sort is possible only for a DAG.

Exercises

1. Find out the minimum number of edges in a strongly connected diagraph on *n* vertices.
2. Test the program for obtaining the depth first spanning tree for the following graph:

ABC Amber CHM Converter Trial version, http://www.processtext.com/abcchm.html

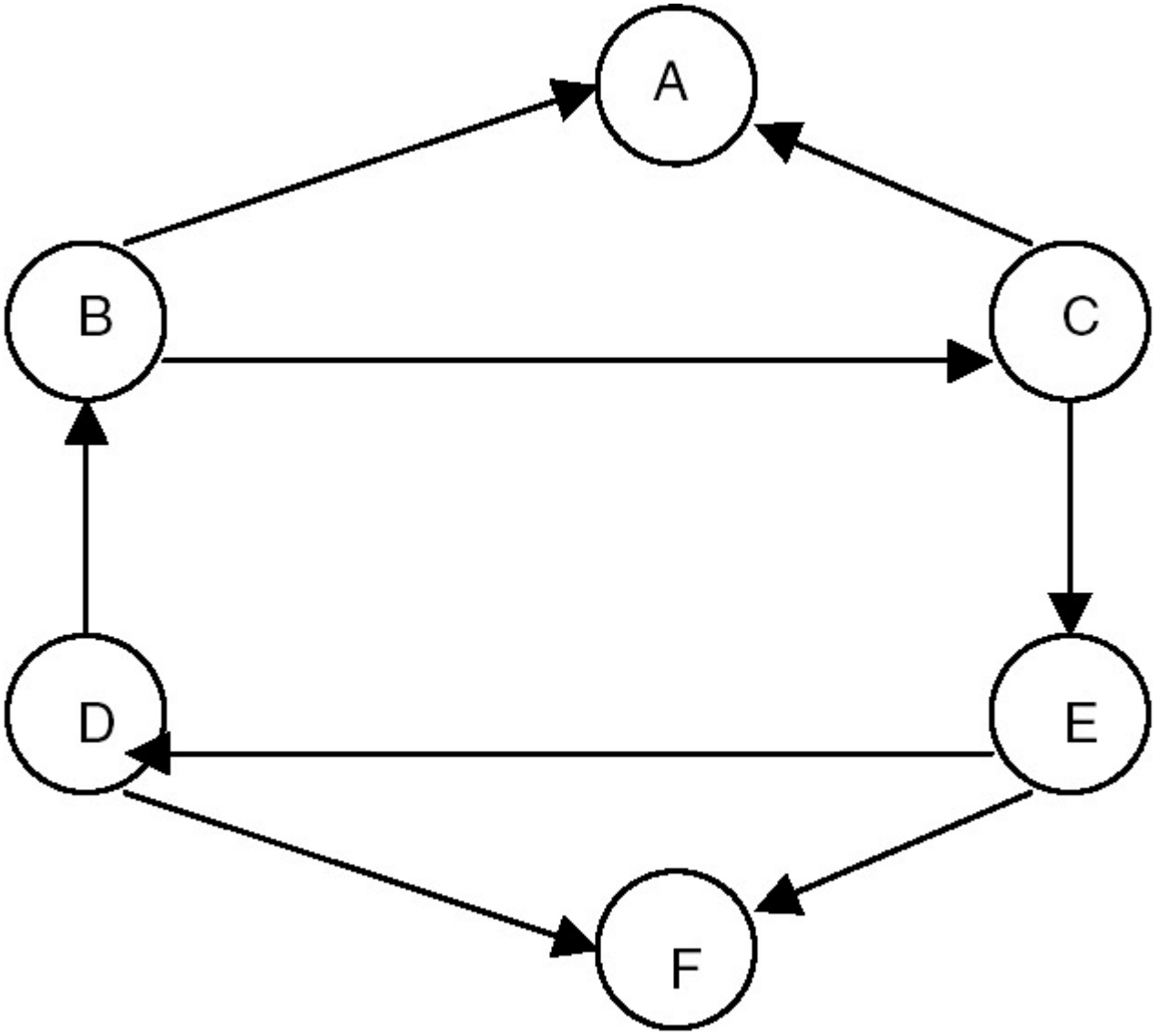

3. Test the program for obtaining the minimum cost spanning tree for the following graph:

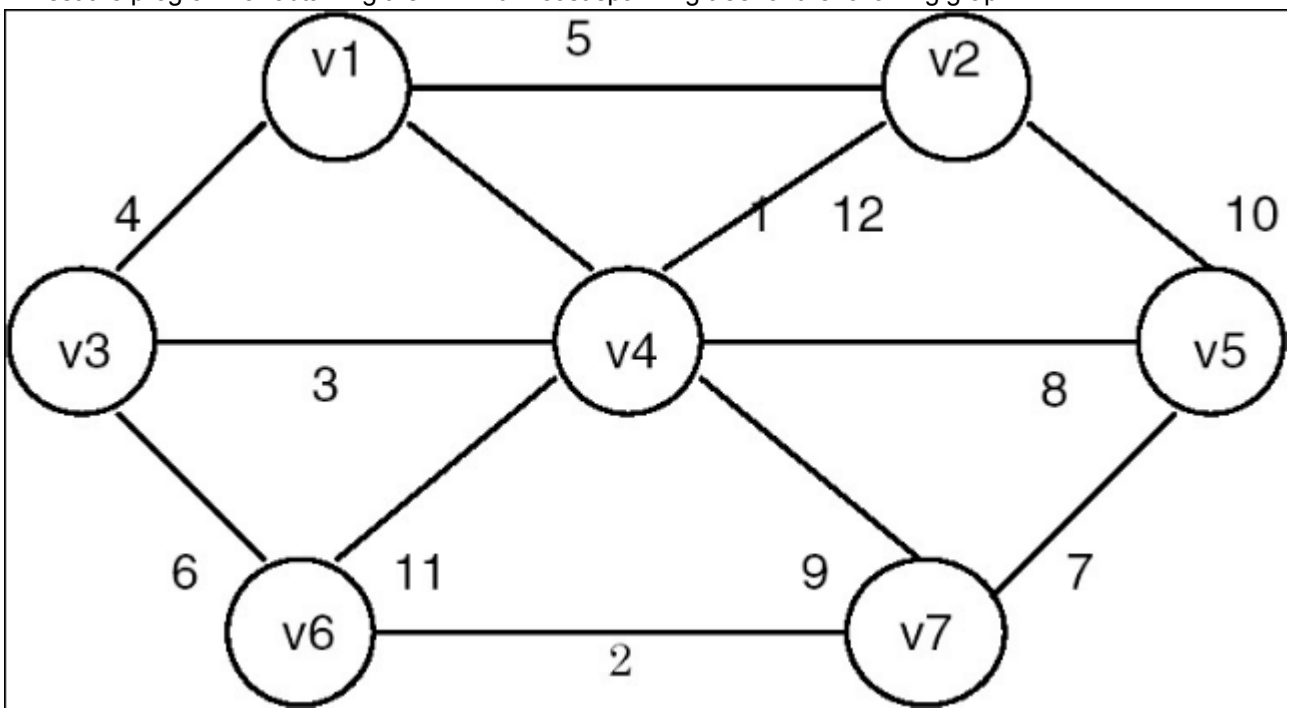

4. Test a program for topological sort for the following DAG:

ABC Amber CHM Converter Trial version, http://www.processtext.com/abcchm.html

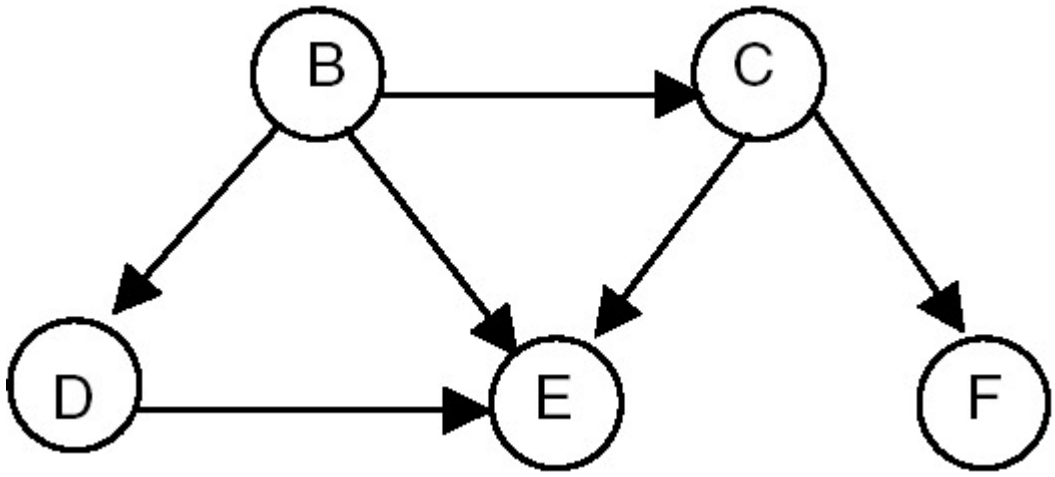

Previous Next

ABC Amber CHM Converter Trial version, http://www.processtext.com/abcchm.html

Part III: Advanced Problems in Data Structures

Chapter 23: Problems in Arrays, Searching, Sorting, Hashing

Chapter 24: Problems in Stacks and Queues

Chapter 25: Problems in Linked Lists

Chapter 26: Problems in Strings

Chapter 27: Problems in Trees

Chapter 28: Problems in Graphs

Chapter 29: Miscellaneous Problems

ABC Amber CHM Converter Trial version, http://www.processtext.com/abcchm.html

Chapter 23: Problems in Arrays, Searching, Sorting, Hashing

PROBLEM: CALCULATE THE VALUE OF AN *N* × N DETERMINANT

Program

```
#include <stdio.h>
#include <math.h>

#define N 3
#define EPSILON 1e-10

typedef enum {FALSE, TRUE} bool;

void print( double a[][N] ) {
    /*
     * print the matrix.
     */
    int i, j;

    for( i=0; i<N; ++i ) {
       for( j=0; j<N; ++j )
              printf( "%8.4g ", a[i][j] );
       printf( "\n" );
    }
    printf( "\n" );
}

void divRow( double a[][N], int row, double divisor ) {
    /*
     * divides row of a by divisor.
     */
    int j;
    for( j=0; j<N; ++j )
    a[row][j] /= divisor;
}

void subRow( double a[][N], int row1, int row2 ) {
    /*
     * row1 -= row2.
     */
```

ABC Amber CHM Converter Trial version, http://www.processtext.com/abcchm.html

```
    int j;
    for( j=0; j<N; ++j )
       a[row1][j] -= a[row2][j];
}

bool anyZero( double a[][N] ) {
    /*
     * returns TRUE if any diagonal entry of a is zero (less than EPSILON).
     */
    int i;
    for( i=0; i<N; ++i )
       if( fabs(a[i][i]) <= EPSILON )
             return TRUE;
    return FALSE;
}

double makeUpper( double a[][N] ) {
    /*
     * makes a an upper-triangular matrix.
     * returns 0 if any of the diagonal entries are 0; 1 otherwise.
     */
    int i, j;
    double factor = 1.0;
    double temp;

    for( i=1; i<N; ++i )    // dont worry about row 0.
       for( j=0; j<i; ++j ) {
              temp = a[i][j];
              if( fabs(temp) > EPSILON ) {
                     printf( "factor=%g dividing row %d by %g...\n", factor,
i, temp );
                     divRow( a, i, temp );
                     print(a);
                     factor *= temp;
              }
              temp = a[j][j];
              if( fabs(temp) > EPSILON && fabs(temp-1.0) > EPSILON ) {
                     printf( "factor=%g dividing row %d by %g...\n", factor,
j, temp );
                     divRow( a, j, temp );
                     print(a);
                     factor *= temp;
                }
                if( fabs(a[i][j]) > EPSILON ) {
```

ABC Amber CHM Converter Trial version, http://www.processtext.com/abcchm.html

```
                        printf( "factor=%g row[%d] -= row[%d]...\n", factor, i,
j );
                        subRow( a, i, j );
                        print(a);
                }
                if( anyZero(a) == TRUE )
                        return 0;
            }
        a[N-1][N-1] *= factor;        // all but(?) last element of row N-1
are zero.

        return 1;
    }

    double multDia( double a[][N] ) {
        /*
         * returns multiplication of diagonal elements.
         */
        int i;
        double factor = 1;

        for( i=0; i<N; ++i )
            factor *= a[i][i];
        return factor;
    }

    int main() {
        double a[N][N] =                            {    {8,0,1},
                                                     {2,1,3},
                                                     {5,3,9}
                                                 };
        double factor;
    print(a);
    factor = makeUpper(a);
    print(a);
    printf( "determinant = %g.\n", factor*multDia(a) );
}
```

Explanation

1. The usual way of finding the value of an $N \times N$ determinant is to take the first element of the first row and multiply it by the value of the determinant formed by removing that row and that column. This procedure is followed recursively at every step until only a single element remains whose value itself is the value of the 1 × 1 determinant. The sign of the element being multiplied may change depending on its row and column. In general, if the element has row i and column j, then its sign is determined by the formula (–1)^(i+j).
2. There is another way to solve the problem. We note that if we perform row or column transformations on the determinant, its value does not change. We take advantage of this fact to

transform the matrix corresponding to the determinant into an upper or lower triangular matrix and then find its determinant value. It becomes clear that the determinant value of an upper or lower triangular matrix is the product of the diagonal elements. Thus the job of finding a determinant value is basically a matter of making a matrix upper or lower triangular.

3. To make a matrix upper triangular (**`makeUpper()`**), we perform row transformations on the matrix. Another important observation is that multiplication of a determinant D by a value v is a new determinant in which any of the rows of D are multiplied by v. Multiplication of a row by v means multiplying each element in the row by v. Thus we maintain a variable factor that keeps track of the multiplier as the rows of the determinant are multiplied or divided by various factors in the process of upper-triangulation. We assume all elements of the determinant to be floating-point numbers.
4. In the process of upper-triangulation, if any of the diagonal elements become 0 (`anyZero()`), that means the value of the determinant is 0 (remember that the value of the determinant is the multiplication of diagonal elements (`multDia()`).
5. Since here we assume that the elements are floating-point numbers, the calculations might not be exact. To account for this approximation, we maintain an error term `EPSILON` which is set to a sufficiently low value (tending to 0). Any value in the range +`EPSILON`...0...–`EPSILON` is considered to be 0.
6. The algorithm for making a matrix upper triangular is as follows:
7.
8. `factor = 1.`
9. `for i=1 to N-1 do`
10. `for j=0 to i-1 do`
11. `  divide row i by D[i][j]  // divRow().`
12. `  factor *= D[i][j].`
13. `  divide row j by D[j][j]  // divRow().`
14. `  factor *= D[j][j].`
15. `  subtract elements of row j from corresponding elements of row i`
16. `// subRow().`
17. `  check for any of the diagonal elements of D to be 0.`
18. `// anyZero().`
19. `  determinant = factor*product of diagonal elements.`
20. **Example:** Let the determinant be
21.
22. `| 8 0 1 |`
23. `| 2 1 3 |`
24. `| 5 3 9 |.`
25. `factor = 1.`

Snapshots of the algorithm when run on this determinant are shown here.

I	J	STEP	FACTOR	DETERMINANT
1	0	divide row 1 by	2	|8 0 1 | |1 0.5 1.5 | |5 3 9 |
1	0	divide row 0 by 8	16	| 1 0 0.125 | | 1 0.5 1.5 | | 5 3 9 |
1	0	row 1 _= row 0|	16	| 1 0 0.125 | | 0 0.5 1.375 | | 5 3 9 |
2	0	divide row 2 by 5	80	| 1 0 0.125 | | 0 0.5 1.375 |

ABC Amber CHM Converter Trial version, http://www.processtext.com/abcchm.html

I	J	STEP	FACTOR	DETERMINANT
				| 1 0.6 1.8 |
2	0	row 2 _= row 0	80	| 1 0 0.125 |
				| 0 0.5 1.375 |
				| 0 0.6 1.675 |
2	1	divide row 2 by 0.6	48	| 1 0 0.125 |
				| 0 0.5 1.375 |
				| 0 1 2.792 |
2	1	divide row 1 by 0.5	24	| 1 0 0.125 |
				| 0 1 2.75 |
				| 0 1 2.792 |
2	1	row 2 _= row 1	24	| 1 0 0.125 |
				| 0 1 2.75 |
				| 0 0 0.0417|

Thus, the determinant = 24*(1*1*0.0417) = 1.

Points to Remember

1. The first way to solve the problem recursively was natural but clumsy, as it requires removal of a row and a column. So, when designing an algorithm, we should try different approaches and then select the most appropriate one.
2. Note how we reduced the problem of finding a determinant value to making a matrix upper triangular. These reductions not only simplify a problem but can also help in reusing the code and analysis.
3. An error term such as `EPSILON` should be used in floating point computations.

Previous Next

ABC Amber CHM Converter Trial version, http://www.processtext.com/abcchm.html

PROBLEM:WRITE A PROGRAM TO FIND THE SADDLE POINT OF A MATRIX, IF IT EXISTS

Program

```
#include <stdio.h>

#define M 3
#define N 3

int findMin( int a[][N], int row ) {
   /*
    * find min value in row of a.
    * return the value.
    */
   int min = a[row][0];
   int j;

   for( j=1; j<N; ++j )
      if( a[row][j] < min )
          min = a[row][j];
      return min;
}

int findMax( int a[][N], int col ) {
   /*
    * find max val in col of a.
    * return the value.
    */
   int max = a[0][col];
   int i;

   for( i=1; i<M; ++i )
      if( a[i][col] > max )
             max = a[i][col];
      return max;
}

void saddle( int a[][N] ) {
    /*
     * finds ALL saddle points of a if exist.
     */
    int i, j;
```

ABC Amber CHM Converter Trial version, http://www.processtext.com/abcchm.html

```
    for( i=0; i<M; ++i ) {
        int min = findMin( a, i );

        for( j=0; j<N; ++j ) {
            int max;
            max = findMax( a, j );
            if( min == max )
                printf( "Saddle : (%d,%d).\n", i, j );
        }
    }
}

int main() {
    int a[M][N] = {5,7,3,7,7,9,7,1,2};
    int row, col;

    saddle(a);

    return 0; }
```

Explanation

1. An M × N matrix is said to have a saddle point if some entry a[i][j] is the smallest in row i and the largest in column j. In the following example matrix, 7 is the saddle point.
2.
3. `| 1 2 3 |`
4. `a = | 4 5 6 |`
5. `| 7 8 9 |`
6. The program is simple and could be completed in O(M × N × M) time by using nested `for` loops. The algorithm is as follows:
7.
8. `for i=0 to M-1 {`
9. `min = minimum value in row i.  // findMin().`
10. `for j=0 to N-1 {`
11. `max = maximum value in column j.  // findMax().`
12. `if (min == max)`
13. `print "saddle found at row ", i, "and column ", j.`
14. `}`
15. `}`
16. Finding the minimum in a row is O(N) and finding the maximum in a column is O(M). Thus the complexity of the algorithm becomes O(M*(N+N*M)), or O(M*N*M).

Points to Remember

1. A saddle point is the value which is minimum in the row and maximum in the column.
2. There can be more than one saddle point in a matrix.
3. There may be no saddle point in a matrix.
4. The complexity of the algorithm is O(M × M × N), where M × N is the size of the matrix.

Previous Next

ABC Amber CHM Converter Trial version, http://www.processtext.com/abcchm.html

PROBLEM: MULTIPLY TWO SPARSE MATRICES

Write a function `mmult()` to multiply two sparse matrices and store the result in another sparse matrix. Each sparse matrix is represented by an array of triplets. Each triplet consists of a row, a column, and a value.

Program

```
#include <stdio.h>

#define M 10              // the matrices are MxP, PxN and MxN.
#define P 7
#define N 8

void ftrans( int a[][3], int b[][3] ) {
    /*
     * finds fast-transpose of a in b.
     */
   int t[P+1];
   int i, j, n, terms;
   int temp, temp2;

   n = a[0][1];
   terms = a[0][2];
   b[0][0] = n;
   b[0][1] = a[0][0];
   b[0][2] = terms;

   if( terms <= 0 )
      return;
   for( i=0; i<n; ++i )
       t[i] = 0;
   for( i=1; i<=terms; ++i )
       t[a[i][1]]++;
   temp = t[0];
   t[0] = 1;
   for( i=1; i<n; ++i ) {
       temp2 = t[i], t[i] = t[i-1]+temp, temp = temp2;
   }
   for( i=1; i<=terms; ++i ) {
       j = t[a[i][1]];
       b[j][0] = a[i][1], b[j][1] = a[i][0], b[j][2] = a[i][2];
       t[a[i][1]] = j+1;
   }
```

ABC Amber CHM Converter Trial version, http://www.processtext.com/abcchm.html

```
}

void printMatrix( int a[][3] ) {
    /*
     * prints the matrix in the form of 3-tuples.
     */
   int i;
   int nterms = a[0][2];

   printf( "rows=%d cols=%d vals=%d.\n", a[0][0], a[0][1], a[0][2] );
   for( i=1; i<=nterms; ++i )
       printf( "a[%d][%d] = %d.\n", a[i][0], a[i][1], a[i][2] );
   putchar( '\n' );
}
void insert( int c[][3], int row, int col, int val ) {
    /*
     * insert or add the triplet (row,col,val) in c.
     * update c[0][2] if necessary.
     */
    int i, terms = c[0][2];

    for( i=1; i<=terms && c[i][0]<row; ++i )
       ;
    for( ; i<=terms && c[i][1]<col; ++i )
       ;
    if( i<=terms && c[i][1] == col )     // already inserted.
       c[i][2] += val;
    else {                                          // a new entry should be
inserted at i.
            c[i][0] = row; c[i][1] = col; c[i][2] = val;
            c[0][2]++;
    }
}

void mmult( int a[][3], int b[][3], int c[][3] ) {
    /*
     * c = a*b;
     */
    int i, j, mn = M*N;
    int aterms = a[0][2], bterms = b[0][2];
    int rowsofb = b[0][0];
    int *t = (int *)malloc( rowsofb*sizeof(int) );
    int temp, temp2;
    int arow, acol, aval, brow, browstart, browend;
```

ABC Amber CHM Converter Trial version, http://www.processtext.com/abcchm.html

```
    c[0][0] = a[0][0];
    c[0][1] = b[0][1];

    // init c.
    for( i=0; i<=mn; ++i )
      c[i][2] = 0;

   // fill t[] : t[i] points to row of b where actual row i starts.
   // last+1 entry is also maintained for easing loops.
   for( i=0; i<=rowsofb; ++i )
       t[i] = 0;
   for( i=1; i<=bterms; ++i )
       t[b[i][0]]++;
   temp = t[0];
   t[0] = 1;
   for( i=1; i<=rowsofb; ++i )
      temp2 = t[i], t[i] = t[i-1]+temp, temp = temp2;

   // now start mult.
   for( i=1; i<=aterms; ++i ) {
       arow = a[i][0]; acol = a[i][1]; aval = a[i][2];
       brow = acol;
       browstart = t[brow]; browend = t[brow+1];
       for( j=browstart; j<browend; ++j )
              insert( c, arow, b[j][1], aval*b[j][2] );
   }
}

int main() {
    int a[][3] = {
                          {4,2,3},
                          {0,1,2},
                          {1,0,3},
                          {3,1,4}
                     };
    int b[][3] = {
                          {2,3,3},
                          {0,2,5},
                          {1,0,7},
                          {1,1,6}
                     };
    int c[M*N+1][3];
```

ABC Amber CHM Converter Trial version, http://www.processtext.com/abcchm.html

```
    printMatrix(a);
    printMatrix(b);
    mmult( a, b, c );
    printMatrix(c);

    return 0;
}
```

Explanation

1. A sparse matrix is represented by an array of triplets. Each triplet consists of a row, a column, and a value corresponding to one nonzero element in the sparse matrix. Thus, we maintain an array of size N × 3 for each sparse matrix, where N is the number of non-zero elements in the array. The first row of each sparse matrix contains the number of rows, columns, and nonzero elements in the matrix. An example follows.

I	A[I][0]	A[I][1]	A[I][2]
0	7	7	8
1	1	1	15
2	1	4	22
3	1	6	_15
4	2	2	11
5	2	3	3
6	3	4	_6
7	5	1	91
8	6	3	28

2. `a[0][0]=7` is the number of rows of the matrix `a`. `a[0][1]=7` is the number of columns of the matrix `a`. `a[0][2]=8` is the number of nonzero elements in the matrix a. The nonzero elements are saved in rows `i=1` to `i=8` where `a[i][0]` is the row, `a[i][1]` is the column, and `a[i][2]` is the value in the matrix `a`. Note that the elements are sorted by row, but inside a row they are sorted by columns.
3. The function `mmult(a, b, c)` takes each element of `a`, with row `arow` and column `acol`, and multiplies with each element of row `acol` of `b`. The product is added to the element in `c` with row `arow` and column equal to the column of the element in `b`. Note that since `a` and `b` are sorted by (row, column), the new entries generated for `c` are also in the same sorted order. Thus we can easily insert the new entries in `c` at the end of the currently stored entries.
4. The only problem now is how to reach the first entry in `b` with row `acol`. One way is to use a binary search to reach the row, as it is sorted by row. But we note that the number of rows of `b` is fixed. So we maintain an array of indices pointing to the first entries for each row in `b`. Thus, if the matrix `b` is as shown previously, the indices maintained in a vector `t` are as shown here.

I	T[I]
0	0
1	1
2	4
3	6
4	0
5	7

ABC Amber CHM Converter Trial version, http://www.processtext.com/abcchm.html

I	T[I]
6	8

5. `t[i] == 0` signifies that row `i` of `b` does not contain any elements. Because of this, the original binary search of order O(log *n*) can now be done in O(1) time. But this needs extra O(Nb) time to construct t[] where Nb is the number of non-zero entries in `b`.
6. `Example:` Let
7.
8. `    | 0 2 |`
9. `a = | 3 0 |, b = | 0 0 5 |`
10. `    | 0 0 |      | 7 0 6 |`
11. `    | 1 4 |`

Here M = 4, P = 2, and N = 3. Then we should get

```
    | 14 0 12 |
c = |  0 0 15 |
    |  0 0  0 |
    | 28 0 29 |
```

The algorithm traverses each element of `a`, and for each element in `a` with row `arow` and column `acol`:

row `acol` of `b` is traversed

the element in a is multiplied by each element in the row-list of b with row acol and column bcol, and

the products are inserted in c as c[arow][bcol].

Thus in every step, an element in a contributes to c. If c[arow][bcol] exists, the product is added to the original value. The multiplication of a and b is given here for the previous example.

STEP	AROW	ACOL	BCOL	A[AROW][ACOL] *B[ACOL][BCOL]	C[AROW][BCOL]
1	0	1	0	14	14
2	0	1	2	12	12
3	1	0	2	15	15
4	3	0	2	5	5
5	3	1	0	28	28
6	3	1	2	24	29

Note that in step 6, the product is 24, while `c[3][2]` gets a value of 29. This happens because `c[3][2]` already contains a value 5 in step 4.

Points to Remember

1. By storing the sparse matrix as an array of triplets, we save a considerable amount of space required for pointers, in the case of a sparse matrix represented by horizontal and vertical lists.
2. Note how the matrix multiplication time reduces by storing the indices to the rows of `b`.
3. The complexity of `mmult()` is O(Na*Cb*Nc*Nc) where Na is the number of non-zero elements in a, Cb is the number of columns in b and Nc is the number of entries in c. The factor Nc*Nc can be reduced by maintaining the maximum (row, column) inserted in c and by performing a binary search while searching for an existing (row, column), or by maintaining an array similar to t[] for b. By storing such extra indices, insertion in c can be done in O(1) which will make mmult() be

ABC Amber CHM Converter Trial version, http://www.processtext.com/abcchm.html

O(Na*Cb).

Previous Next

ABC Amber CHM Converter Trial version, http://www.processtext.com/abcchm.html

PROBLEM: MULTIPLICATION OF TWO SPARSE MATRICES (DIFFERENT VERSIONS)

Let `a` and `b` be two sparse matrices. Write a function `sMatMul(a, b, c)` to set up the structure for `c=a*b`.

Program

```
#include <stdio.h>

#define M 10
#define N 10
#define P 10
#define DEFAULTVAL 0
#define SUCCESS 0
#define ERROR -1

typedef int type;
typedef struct node node;

struct node {
   type data;
   int row;
   int col;
   node *hnext;
   node *vnext;
};

typedef struct {
   node *rows;
   node *cols;
} spmat;

void sInit( spmat *mat, int rows, int cols ) {
    /*
     * initialize the matrix.
     */
   int i;

   mat->rows = (node *)malloc( sizeof(node)*rows );
   mat->cols = (node *)malloc( sizeof(node)*cols );
   for( i=0; i<rows; ++i ) {
       mat->rows[i].hnext =
       mat->rows+i; mat->rows[i].row = i;
```

ABC Amber CHM Converter Trial version, http://www.processtext.com/abcchm.html

```
    }
    for( i=0; i<cols; ++i ) {
        mat->cols[i].vnext =
        mat->cols+i; mat->cols[i].col = i;
    }
}

int sAdd( spmat *mat, int row, int col, type data ) {
    /*
     * adds a new node to the sparse matrix.
     */
    node *ptr;

    if( data == DEFAULTVAL )
        return;
    ptr       = (node *)malloc( sizeof(node) ); // freed in cColInsert() if
reqd.
    ptr->data = data;
    ptr->row = row;
    ptr->col = col;
    cRowInsert( mat->rows+row, ptr );
    cColInsert( mat->cols+col, ptr );

    return SUCCESS;
}

int cRowInsert( node *head, node *dataptr ) {
    /*
     * inserts dataptr in appropriate row of sparse matrix.
     */
    node *ptr, *prev;
    for( prev=head, ptr=prev->hnext; ptr!=head && ptr->col<dataptr->col;
prev=ptr, ptr=ptr->hnext )
        ;
    if( ptr!=head && ptr->col == dataptr->col ) { // data already exists.
        ptr->data += dataptr->data; // this is for multiplication.
        return SUCCESS;
    }
    // dataptr should be added between prev and ptr.
    dataptr->hnext = ptr;
    prev->hnext = dataptr;

    return SUCCESS;
}
```

ABC Amber CHM Converter Trial version, http://www.processtext.com/abcchm.html

```
int cColInsert( node *head, node *dataptr ) {
   /*
    * inserts dataptr in appropriate col of sparse matrix.
    * Assume that cRowInsert() was called before.
    */
   node *ptr, *prev;
   for( prev=head, ptr=prev->vnext; ptr!=head && ptr->row<dataptr->row;
prev=ptr, ptr=ptr->vnext )
              ;
          if( ptr!=head && ptr->row == dataptr->row ) { // data already
exists.
              free(dataptr);
              return SUCCESS;
          }
          // dataptr should be added between prev and ptr.
          dataptr->vnext = ptr;
          prev->vnext = dataptr;

          return SUCCESS;
}

void cRowPrint( node *head ) {
    /*
     * print a row.
     */
   node *ptr;

   printf( "%2d : ", head->row );
   for( ptr=head->hnext; ptr!=head; ptr=ptr->hnext )
      printf( "%d(%d,%d) ", ptr->data, ptr->row, ptr->col );
   printf( "\n" );
}

void cColPrint( node *head ) {
    /*
     * print a col.
     */
    node *ptr;
    printf( "%2d : ", head->col );
    for( ptr=head->vnext; ptr!=head; ptr=ptr->vnext )
       printf( "%2d(%d,%d) ", ptr->data, ptr->row, ptr->col );
    printf( "\n" );
}
```

ABC Amber CHM Converter Trial version, http://www.processtext.com/abcchm.html

```
void sHPrint( spmat *mat, int rows ) {
    /*
     * print sparse matrix by traversing it row-wise.
     */
    int i;
    for( i=0; i<rows; ++i )
        cRowPrint( mat->rows+i );
    printf( "\n" );
}

void sVPrint( spmat *mat, int cols ) {
    /*
     * print sparse matrix by traversing it col-wise.
     */
    int i;
    for( i=0; i<cols; ++i )
        cColPrint( mat->cols+i );
    printf( "\n" );
}

type sGetVal( spmat *a, int row, int col ) {
    /*
     * return a[row][col];
     */
    node *head = a->rows+row;
    node *ptr;

    for( ptr=head->hnext; ptr!=head; ptr=ptr->hnext )
       if( ptr->col == col )
              return ptr->data;
    return DEFAULTVAL;       // entry absent in matrix : default value 0.
}

int sMatMulBad( spmat *a, spmat *b, spmat *c ) {
   /*
    * original inefficient implementation of matrix mult.
    */
   int i, j, k;

   for( i=0; i<M; ++i )
      for( j=0; j<N; ++j ) {
             type data = 0;
             for( k=0; k<P; ++k )
```

ABC Amber CHM Converter Trial version, http://www.processtext.com/abcchm.html

```
                    data += sGetVal(a,i,k)*sGetVal(b,k,j);
            sAdd( c, i, j, data );
      }
   return SUCCESS;
}

int sMatMul( spmat *a, spmat *b, spmat *c ) {
   /*
    * matrix multiplication.
    */
   node *ptri, *ptrj;
   int i;

   for( i=0; i<M; ++i )
       for( ptri=a->rows[i].hnext; ptri!=a->rows+i; ptri=ptri->hnext )

              int row = ptri->col;
              for( ptrj=b->rows[row].hnext; ptrj!=b->rows+row;
ptrj=ptrj->hnext ) {
                          sAdd( c, i, ptrj->col, ptri->data*ptrj->data );
                    }
           }
        return SUCCESS;
}

int main() {
    spmat a, b, c;

    sInit(&a,M,P); sInit(&b,P,N); sInit(&c,M,N);
    sAdd( &a, 0,1, 2 );
    sAdd( &a, 1,0, 3 );
    sAdd( &a, 3,1, 4 );

    sAdd( &b, 0,2, 5 );
    sAdd( &b, 1,0, 7 );
    sAdd( &b, 1,1, 6 );

    sHPrint(&a,M);
    sHPrint(&b,P);

    sMatMul( &a, &b, &c );
    sHPrint(&c,M);
    sVPrint(&c,N);
```

```
    return 0;
}
```

Explanation

1. A sparse matrix is represented as two arrays of pointers: one for rows and the other for columns. Each row and each column is represented by horizontal and vertical circular lists. A nonzero entry `a[i][j]` is added as a node to the horizontal list of row `i` and the same node in the vertical list of column `j`. A node represents an entry. Thus it contains row, column, and values along with horizontal and vertical pointers in the lists.
2. Let the sizes of sparse matrices `a`, `b` be M×P, P×N. Thus the size of `c` is M×N. We describe the algorithm using an example. Let
3.
4.
5.
6.
7.

```
      | 0 2 |
a = | 3 0 |, b = | 0 0 5 |
      | 0 0 |       | 7 0 6 |
      | 1 4 |
```

Here M = 4, P = 2, and N = 3. Then we should get

```
     | 14 0 12 |
c = |  0 0 15 |.
     |  0 0  0 |
     | 28 0 29 |
```

8. The algorithm traverses each row of `a` and checks its horizontal list corresponding to each row for any elements in it. For each element in `a` with row `arow` and column `acol`, row `acol` of `b` is traversed and the element in `a` is multiplied by each element in the row-list of `b` with row `acol` and column `bcol`. The products are inserted in `c` as `c[arow][bcol]`. Thus, in every step, an element in `a` contributes to `c`. If `c[arow][bcol]` exists, then the product is added to the original value. The multiplication of `a` and `b` is given here for the previous example.

STEP	AROW	ACOL	BCOL	A[AROW][ACOL]*B[ACOL][BCOL]	C[AROW][BCOL]
1	0	1	0	14	14
2	0	1	2	12	12
3	1	0	2	15	15
4	2				
5	3	0	2	5	5
6	3	1	0	28	28
7	3	1	2	24	29

9. Step 4 signifies that `a`[4] is taken for traversal but is not traversed as it is empty. Note that the product is 24 in step 7, while `c`[3][2] gets a value of 29. This happens because `c`[3][2] already contains a value of 5 in step 5.
10. Let `na`, `nb` be the number of nonzero entries in `a` and `b`. The basic step in this algorithm is adding the products of the elements in `a` and `b` to `c`. So even if the outer loop traverses from 0 to M–1, the `sAdd()` function gets invoked for each entry `a[i][j]`. This invoking is done for each nonzero element in row `j` of `b`. Thus at most, the number of multiplications for `a[i][j]` will be equal to `N`, number of columns of `b`. Thus the complexity of the matrix multiplication algorithm is O(na*N). However, if we add the complexity due to the outermost loop, the complexity is O(na*N+M*nb).

ABC Amber CHM Converter Trial version, http://www.processtext.com/abcchm.html

Points to Remember

1. A slight modification to the usual `add(matrix,row,col,value)` function resulted in an easing of the implementation of the matrix multiplication. In general, if `a[i][j]` is inserted and it already exists, then we either overwrite the value or return an error. By adding the new value to the original value, we can add products of elements of `a` and `b` to `c` incrementally.
2. The sparse matrix, as it is represented by a complicated data structure, should be initialized properly.
3. An array-based matrix multiplication program has the complexity O(M*P*N). If we use a similar procedure in this representation as in `sMatMulBad()`, the complexity increases to O(M*P*N*P) as sGetVal is O(P).
4. Insertions were simplified by the representation of empty rows and columns by head nodes rather than `NULL` lists.

Previous Next

ABC Amber CHM Converter Trial version, http://www.processtext.com/abcchm.html

PROBLEM: IMPLEMENT *K*-WAY SORT-MERGE TO SORT A FILE CONTAINING RECORDS

Program

```
#include <stdio.h>
#include <malloc.h>

#define N 80
#define K 2                        // K-way merge.
#define DATAFILE "main.txt"
#define TEMPFILE "temp.txt"

typedef struct node node;
typedef enum {FALSE, TRUE} bool;

struct node {
   int val;
   char s[N];
};

node buf[K];           // buffer used for merging.
int rec[K];            // record numbers of nodes in buffer.

int getNRecords( char *filename ) {
   /*
    * returns no of records in file filename using size of the file.
    */
   int off;
   FILE *fp = fopen( filename, "r" );
   fseek (fp, 0, SEEK_END );
   off = ftell(fp)/sizeof(node); // no of records.
   fclose(fp);

   return off;
}

void writeToFile( char *filename, node *n ) {
    /*
     * writes record n to file filename.
     */
   FILE *fp = fopen( filename, "a" );
   fwrite( n, sizeof(node), 1, fp );
```

ABC Amber CHM Converter Trial version, http://www.processtext.com/abcchm.html

```
    fclose(fp);
}

void readFromFile( char *filename, node *n, int off ) {
     /*
      * reads a record at offset off from file filename into n.
      * off is number of records before the record in the file (NOT bytes).
      * off starts from 0.
      */
    FILE *fp;
    //printf( "reading rec no %d...\n", off );
    if( off >= getNRecords(filename) ) {
        fprintf( stderr, "ERROR: reading beyond the file.\n" );
        return;
    }
    printf("total records are %d\n",getNRecords(filename));
    fp = fopen( filename, "r" );
    fseek( fp, off*sizeof(node), SEEK_CUR );
    fread( n, sizeof(node), 1, fp );
    fclose(fp);
}

void writeFun( char *filename ) {
     /*
      * writes some data to filename.
      */
    node data[10] = {
                                        {5,"five"},
                                        {3,"three"},
                                        {4,"four"},
                                        {8,"eight"},
                                        {7,"seven"},
                                        {6,"six"},
                                        {9,"nine"},
                                        {10,"ten"},
                                        {1,"one"},
                                        {2,"two"}
                    };
    int i;
    for( i=0; i<10; ++i )
        writeToFile( filename, data+i );
}

void readFun( char *filename ) {
```

ABC Amber CHM Converter Trial version, http://www.processtext.com/abcchm.html

```
    /*
     * reads filename and prints the data.
     */
    node n;
    int i, nrec = getNRecords(filename);

    for( i=0; i<nrec; ++i ) {
        readFromFile( filename, &n, i );
        printf( "%2d={%2d,%-5s}.\n", i, n.val, n.s );
    }
}

void copyrec( int *rec, int *rec2 ) {
     int i;
     *rec2 = *rec;

   for( i=0; i<K; ++i )
       rec2[i] = rec[i];
}

void fillbuf( int start, int l, int nrec, char *srcfile ) {
    /*
     * fills buf and rec with appropriate values.
     * l is length of each run.
     * start is rec no of first rec in first run.
     * data is in srcfile in nrec records.
     */
    int i;
    printf( "start=%d l=%d.\n", start, l );
    for( i=0; i<K; ++i ) {
        int startoff = start+l*i;
        if( startoff >= nrec )
               break;
        rec[i] = startoff;
        printf( "buf[%d]=%d.\n", i, startoff );
        readFromFile( srcfile, buf+i, startoff );
   }
   for( ; i<K; ++i )
      rec[i] = -1;
   getchar();
}

void updatebuf( node *buf, int *rec, int *rec2, int prevrec, int l, char
*srcfile, int nrec ) {
```

ABC Amber CHM Converter Trial version, http://www.processtext.com/abcchm.html

```
      /*
       * updates buf+rec2 as rec2[prevrec] was output.
       * read appropriate record from srcfile if necessary.
       * rec still contains the original rec nos which can be used for
       * checking ends of runs.
       * l is runlength.
       */
      if( rec2[prevrec] < nrec-1 && rec2[prevrec] < rec[prevrec]+l-1 ) {
         // rec2[prevrec] was NOT the last rec of that run.
         rec2[prevrec]++;
         readFromFile( srcfile, buf+prevrec, rec2[prevrec] );
   }
   else {
      // rec2[prevrec] was the last rec of that run.
      rec2[prevrec] = -1; // job of this run is over.
   }
}

int getMin( node *buf, int *rec2 ) {
    /*
     * returns index in buf of that record which has min sorting value.
     * rec2 is needed for checking whether a buf entry is valid.
     */
    int minval = 9999;
    int minindex = -1;
    int i;

    for( i=0; i<K; ++i )
        if( rec2[i] != -1 && buf[i].val < minval ) {
               minval = buf[i].val;
               minindex = i;
        }
    return minindex;
}

void merge( char *srcfile, char *dstfile, node *buf, int *rec2, int l, int
nrec ) {
    /*
     * rec2 contains record numbers being compared; global rec also contains
     * the same at this point.
     * buf contains their actual data.
     * l is runlength.
     * srcfile is needed for reading next data.
     * the data is appended to dstfile.
```

ABC Amber CHM Converter Trial version, http://www.processtext.com/abcchm.html

```
    * total no of records being written is min(l*k,nrec-rec[0]).
    */
   int totalrec = l*K;
   int i;
   int nrecremaining = nrec-rec[0];        // no of rec in srcfile yet to be
written to dstfile.

   if( nrecremaining < totalrec )
      totalrec = nrecremaining;
   printf( "totalrec=%d nrecremaining=%d.\n", totalrec, nrecremaining
);

   for( i=0; i<totalrec; ++i ) {
       int nextrec = getMin( buf, rec2 ); // here goes the comparison.
       printf( "after getMin: min=%d rec2=%d %d %d buf=%d %d %d.\n", nextrec,
rec2[0], rec2[1], rec2[2], buf[0].val, buf[1].val, buf[2].val );
       if( nextrec == _1 ) {
              fprintf( stderr, "ERROR: merge(): all rec2 are _1!\n" );
              return;
       }
       //printf( "min=%d.\n", nextrec );
       // this is the index in rec2 of next record to be output.
       writeToFile( dstfile, buf+nextrec );
       // remove this written record. read new record from srcfile if needed.
       updatebuf( buf, rec, rec2, nextrec, l, srcfile, nrec );
       //printf( "after updatebuf : rec2=%d %d %d.\n", rec2[0], rec2[1],
rec2[2] );
   }
}
void mergedriver( char *srcfile, char *dstfile ) {
    /*
     * sort+merge srcfile and store in dstfile.
     */
    int nrec = getNRecords(srcfile);
    int i, l;
    int rec2[K];
    char tempname[N];

    for( l=1; l<nrec; l*=K ) {
        // l is length of each run.
        // no of runs = ceil( nrec/l );
        // we need to consider only K runs at a time.

        for( i=0; i<nrec; i+=l*K ) {
```

ABC Amber CHM Converter Trial version, http://www.processtext.com/abcchm.html

```
                // fill buf with appropriate values.
                fillbuf( i, l, nrec, srcfile );
                copyrec( rec, rec2 );
                merge( srcfile, dstfile, buf, rec2, l, nrec );
        }
        unlink( srcfile );
        strcpy( tempname, srcfile );
        strcpy( srcfile, dstfile );
        strcpy( dstfile, tempname );
    }
    // sorted file is srcfile.
    printf( "\n\n\n" );
    readFun( srcfile );
}

int main() {
    char srcfile[N] = DATAFILE;
    char dstfile[N] = TEMPFILE;
    unlink( srcfile );
    unlink( dstfile );
    writeFun( srcfile );
    readFun( srcfile );
    printf( "nrec=%d.\n", getNRecords(srcfile) );
    mergedriver( srcfile, dstfile );

    return 0;
}
```

Explanation

1. The function `main()` creates a test file by using `writeFun()` and calls `mergedriver()`. `mergedriver()` calls the function `merge()` after reading (`fillbuf()`) K blocks of the file into memory.
2. The function `merge()` compares the blocks and sorts them on the predetermined key. The block with the minimum key (`getMin()`) is written to the file and its block is filled (`updatebuf()`) with the next record from the file. The sorting and merging thus proceeds simultaneously to successively sort the file.
3. The number of blocks being compared are called runs. Each run length increases with each iteration. It is 1 initially, then it becomes K, then K*K and so on. As it becomes greater than or equal to the number of records in the file (`getNRecords()`), the file is sorted because all the records in each run are sorted after each iteration.
4. **Example:** Assume the blocks are saved in a file as shown next and let K=3. Then the algorithm transforms the file as follows:

STEP	FILE	RUNLENGTH
1	5 3 4 8 7 6 9 10 2 1	1
2	3 4 5 6 7 8 2 9 10 1	3
3	2 3 4 5 6 7 8 9 10 1	9

ABC Amber CHM Converter Trial version, http://www.processtext.com/abcchm.html

STEP	FILE	RUNLENGTH
4	1 2 3 4 5 6 7 8 9 10	27

Points to Remember

1. he complexity of merge-sort is O(*n* log*n*) where n is the number of records in the file. However, in general, the statements that are added to the complexity are comparisons or a nested assignment. But in case of files, one needs to consider reading and writing of records in the file, as the time required for execution of one such operation is much more than a comparison in memory or a simple assignment.
2. Sorting in files is called external sorting while sorting in main memory is termed internal sort.
3. By exchanging the names of source and destination files in `mergedriver()`, we avoided copying of files in each iteration.

Previous Next

ABC Amber CHM Converter Trial version, http://www.processtext.com/abcchm.html

PROBLEM: FIND A PLATEAU IN A MATRIX

Find a rectangular region in a matrix with the maximum sum of its elements. The elements may be negative.

Program

```
#include <stdio.h>

#define COLS 5
#define MININT -99999

int filter(int a[][COLS], int i, int j, int k, int l, int rows, int cols) {
    /*
     * filter the matrix of size k*l starting from a[i][j].
     * size of the matrix is rows*cols.
     * k, l start with 1.
     */
   int iii, jjj;
   int sum = 0;

   if(i+k > rows || j+l > cols) // the matrix was already considered
                                                                // with smaller k,
l.
           return MININT;

     for(iii=0; iii<k && (i+iii)<rows; ++iii)
         for(jjj=0; jjj<l && (j+jjj)<cols; ++jjj) {
                 sum += a[i+iii][j+jjj];
                 if(sum < 0)
                        return sum;              // this is reqd: if all vals
-ve.
         }
     return sum;
}

void printMatrix(int a[][COLS], int i, int j, int k, int l, int rows, int
cols) {
  /*
   * print a rectangular region of a from a[i][j] of size k*l if possible.
   * the matrix is bounded by rows*cols.
   */
  int iii, jjj;

  for(iii=0; iii<k && (i+iii)<rows; ++iii) {
```

ABC Amber CHM Converter Trial version, http://www.processtext.com/abcchm.html

```
      for(jjj=0; jjj<l && (j+jjj)<cols; ++jjj)
             printf("%d ", a[i+iii][j+jjj]);
      printf("\n");
   }
   getchar();
}

void plateau(int a[][COLS], int rows, int cols) {
    /*
     * finds a rectangular region having max sum of elements in it.
     */
    int maxsum = a[0][0];
    int maxrow1=0, maxrow2=0, maxcol1=0, maxcol2=0;
    int i, j, k, l;
    int sum;

    for(i=0; i<rows; ++i)
        for(j=0; j<cols; ++j)
            // generate k*l matrix using a[i][j].
            for(k=1; k<=rows; ++k)
                   for(l=1; l<=cols; ++l) {
                          sum=filter(a, i, j, k, l, rows, cols);
                          if(sum > maxsum) {
                                 maxsum=sum, maxrow1=i, maxcol1=j, maxrow2=i+k
-1, maxcol2=j+l-1;
                          }
                     }
       printf("sum=%d.\n", filter(a, maxrow1, maxcol1, maxrow2-maxrow1+1,
maxcol2-maxcol1+1, rows, cols));
       printMatrix(a, maxrow1, maxcol1, maxrow2-maxrow1+1, maxcol2-maxcol1+1,
rows, cols);

}

int main() {
    int a[][COLS] = {
                           {5,-1,-2,-4,1},
                           {-3,2,10,-6,3},
                           {-1,9,-11,-7,9},
                           {3,101,3,-2,-96},
                           {-1,-2,0,3,-3},
                           {-1,-2,-3,2,-3}
                       };
   plateau(a, sizeof(a)/COLS/sizeof(int), COLS);
```

ABC Amber CHM Converter Trial version, http://www.processtext.com/abcchm.html

```
    return 0;
}
```

Explanation

1. Considesr the following matrix. The rectangle of elements with the maximum sum is also given.
2.
3. | 5 –1 –2 –4 1 | | 5 –1 |
4. | –3 2 10 –6 3 | | –3 2 |
5. | –1 9 –11–7 9 | | –1 9 | sum = 115.
6. | 3 101 3 –2 –96 | | 3 101|
7. | –1 –2 0 3 –3 |
8. | –1 –2 –3 2 –3 |

An example matrix and its maximum-sum-plateau.

9. A straightforward algorithm to find a maximum sum is as follows.
10.
11. `for i=0 to rows-1`
12. `for j=0 to columns-1 {`
13. `maxsum = matrix[i][j].`
14. `for height=1 to rows`
15. `for width=1 to columns {`
16. `let M = matrix of size height x width from matrix[i][j].`
17. `let sum = sum of elements of M.`
18. `if sum > maxsum`
19. `maxsum = sum.`
20. `}`
21. `}`

The values of i, j, width, and height at any point represent the matrix. Those values can be saved to print the matrix at the end of the algorithm.

The complexity of this procedure is O(m*m*m*n*n*n) where the size of the original matrix is m × n. The complexity of finding the sum of elements of M is O(m*n).

22. This procedure can be made more efficient by noting that not every internal matrix M needs to be generated. For an element `matrix[i][j]`, the maximum width of the matrix starting from the element can be columns-j and maximum height can be rows–i. Thus, the number of iterations of loops over width and height can be decreased. Also, for an element e, if the sum of elements of a rectangular region of size height × width starting from e is negative, then no rectangular region of size more than height × width starting from e can have a sum higher than the final result. We show this in the example matrix.

Let `i=1` and `j=2`. `matrix[i][j] = 10`. Let height = 2 and width = 1. Thus the matrix contains two elements in it, {10, –11} and the sum is –1. Since the sum is negative, there is no point in increasing the size of the matrix and considering other elements because whatever their sum (say s), by adding this matrix to it, the total sum is definitely going to be lower than s. The matrix containing sum s may be a candidate for the result. So our matrix cannot have a sum greater than the final result. Thus, if we increase the height of the matrix further so that the elements are {10, –11, 3}, the sum becomes 2 which is less than a 1 × 1 matrix starting from 3. Instead, if we increase the width so that the elements are {10, –11, –6, –7}, the sum is –14 which is even lower.

The function `filter()` implements this strategy.

Points to Remember

1. By considering only those matrices that start from an element e, that is those increasing in width to the right of e and increasing in height downwards from e, we select all the possible rectangular regions without any repetition.
2. We need not increase the size of a submatrix once the sum of its elements becomes negative.
3. If all the values in the input matrix are negative, then the result is a 1×1 matrix with the only

element having a minimum magnitude.

4. There can be multiple solutions to this problem.
5. The complexity of finding the sum of elements of a submatrix can be increased by noting the sum incrementally.

Previous Next

ABC Amber CHM Converter Trial version, http://www.processtext.com/abcchm.html

PROBLEM: IMPLEMENTATION OF A HASH SEARCH

Write a program that takes strings as inputs and stores them in a hash table. It should then ask the user for strings to be searched in the hash table. Use shift- folding as the hashing function and chaining for overflow handling.

Program

```
#include <stdio.h>
#include <string.h>
#include <malloc.h>

#define MAXLEN 80
#define HASHSIZE 23             // some prime val.
#define SHIFTBY 3               // each group size in hashing.

typedef struct node node;
typedef char *type;
typedef node *hashtable[HASHSIZE];

struct node {
   int val;
   char *key;
   node *next;
};

int hGetIndex(char *key) {
   /*
    * returns index into hashtable applying hash function.
    * uses shift-folding followed by mod function for hashing.
    */
   int i, n, finaln=0;
   char *keyptr;

   for(keyptr=key; *keyptr; finaln+=n)
       for(i=0, n=0; i<SHIFTBY && *keyptr; ++i, ++keyptr)
              n = n*10 + *keyptr;
   finaln %= HASHSIZE;

   return finaln;
}

void hInsert(hashtable h, char *key, int val) {
    /*
```

ABC Amber CHM Converter Trial version, http://www.processtext.com/abcchm.html

```
     * insert s in hashtable h.
     * use shift-folding followed by mod function for hashing.
     * does NOT check for duplicate insertion.
     */
   node *ptr = (node *)malloc(sizeof(node));
   int index = hGetIndex(key);

   ptr->key = strdup(key);
   ptr->val = val;
   ptr->next = h[index];

   h[index] = ptr;
   printf("h[%d] = %s.\n", index, key);
}

int hGetVal(hashtable h, char *key) {
   /*
    * returns val corresponding to key if present in h else -1.
    */
   node *ptr;

   for(ptr=h[hGetIndex(key)]; ptr && strcmp(ptr->key, key); ptr=ptr->next)
      ;
   if(ptr)
       return ptr->val;
   return -1;
}

void printHash(hashtable h) {
    /*
     * print the hashtable rowwise.
     */
   int i;
   node *ptr;

   for(i=0; i<HASHSIZE; ++i) {
       printf("%d: ", i);
       for(ptr=h[i]; ptr; ptr=ptr->next)
              printf("%s=%d ", ptr->key, ptr->val);
       printf("\n");
   }
}

int main() {
```

ABC Amber CHM Converter Trial version, http://www.processtext.com/abcchm.html

```
    char s[MAXLEN];
    int i = 0;
    hashtable h = {"abc"};

    printf("Enter the string to be hashed: ");
    gets(s);

    while(*s) {
       hInsert(h, s, i++);
       printf("Enter the string to be hashed(enter to end): ");
       gets(s);
    }
    printf("Enter the string to be searched: ");
    gets(s);

    while(*s) {
       printf("%s was inserted at number %d.\n", s, hGetVal(h, s));
       printf("\nEnter the string to be searched(enter to end): ");
       gets(s);
    }
    //printHash(h);

    return 0;
}
```

Explanation

1. The hash table is maintained as an array of lists. Each list is either empty or contains nodes containing strings that map to the index in the hash table, after application of the hashing function. The string in the node is called the key. Each node also stores an integer that is the number at which the string was inserted in the hash table. Thus, each node contains a (key, value) pair. In a realistic situation, a value can be anything that has a key associated with it.
2. The program contains two loops. In the first, it asks the user to enter a series of strings and calls `hInsert()` to insert the strings in the hash table. The second loop asks the user to enter a string and returns the number at which it was inserted. An insertion number of –1 indicates that the string is not present in the hash table. This is done by using the function `hGetVal()`. Both these functions make use of the hashing function `hGetIndex()`, which, given a string, returns its hashing index. It folds the string into a pattern of *m* characters (perhaps except the last), and forms an integer out of each *m* characters. It then adds all these integers to get another number. This is then divided by the size of the hash table array to get the remainder as an index into the hash table. `hInsert()` adds this new string and its insertion sequence to a node and this node is added to the start of the list in the index. `hGetVal()` searches the list at this index for the input string. If it finds such a string, its insertion sequence is returned, otherwise it returns –1.
3. Since the complexity of insertion of a node in the list is O(1), the complexity of `hInsert()` is the complexity of the hashing function. The complexity of the hashing function is O(*p*) where p is the average length of the string. Thus the complexity of `hInsert()` is O(*p*). The complexity of `hGetVal()` is O(*p*+*q*) where *q* is the average number of nodes in each list. Chaining involves a linear search.

Points to Remember

1. The complexity of insertion in the hash table is decided by the hashing function if simple chaining

ABC Amber CHM Converter Trial version, http://www.processtext.com/abcchm.html

is used for overflow handling.

2. The complexity of searching is decided by both the hashing function and the overflow handling technique.
3. An ideal hash function maps every input string to a different index and thus has zero collisions. Assuming that the complexity of a hash function is O(1), the insertions and searching into an ideal hash table are O(1).
4. Hash tables are used in compilers for symbol-table management. Hash tables have numerous other applications as well.
5. Different overflow handling techniques such as linear probing, quadratic probing, random probing, rehashing, etc., are in use depending on the application requirement.

Previous Next

ABC Amber CHM Converter Trial version, http://www.processtext.com/abcchm.html

PROBLEM: IMPLEMENTATION OF REHASHING

Write functions to insert and search in a hash table by using the rehashing technique. Use linear probing if the rehashing fails.

Program

```
#include <stdio.h>
#include <string.h>
#include <malloc.h>
#define MAXLEN 80
#define HASHSIZE 23             // some prime val.
   typedef struct node node;
   typedef char *type;
   typedef node *hashtable[HASHSIZE];

   struct node {
      int val;
      type key;
};

int hGetIndex1(type key) {
   /*
    * returns index into hashtable applying hash function.
    * uses sum of elements followed by mod function for hashing.
    */
   int n=0;
   char *keyptr;

   for(keyptr=key; *keyptr; ++keyptr)
       n += *keyptr;

   return n%HASHSIZE;
}

int hGetIndex2(type key) {
   /*
    * returns index into hashtable applying hash function.
    * sums the products of elements with their indices and then mod.
    */
   long n=0;
   int i;
   type keyptr;
```

ABC Amber CHM Converter Trial version, http://www.processtext.com/abcchm.html

```
   printf("Function 2:).\n");
   for(keyptr=key, i=1; *keyptr; ++keyptr, ++i)
       n += i**keyptr;

   return n%HASHSIZE;
}
int hGetEmptySlot(hashtable h, int index) {
   /*
    * search for an empty slot in h starting from index+1.
    */
   int i;

   for(i=index+1; i<HASHSIZE; ++i) // index+1 to end of hashtable.
       if(!h[i])
             return i;
   for(i=0; i<index; ++i)                  // starting from 0 to index-
1.
       if(!h[i])
              return i;
   return -1;
}

int hLinearProbe(hashtable h, type key, int index) {
   /*
    * search for node having key in h starting from index+1.
    */
   int i;

   for(i=index+1; i<HASHSIZE; ++i) // index to end of hashtable.
       if(h[i] && !strcmp(h[i]->key, key))
               return i;
       else if(!h[i])
               return -1;
   for(i=0; i<index; ++i)    // starting from 0 to index-1.
       if(h[i] && !strcmp(h[i]->key, key))
               return i;
       else if(!h[i])
               return -1;
   return -1;
}

void hInsert(hashtable h, type key, int val) {
    /*
```

ABC Amber CHM Converter Trial version, http://www.processtext.com/abcchm.html

```
     * insert s in hashtable h.
     * does NOT check for duplicate insertion.
     */
    node *ptr = (node *)malloc(sizeof(node));
    int index = hGetIndex1(key);

    if(h[index]) {
        index = hGetIndex2(key);
        if(h[index]) {
             index = hGetEmptySlot(h, index);
             if(index == -1) {
                    printf("ERROR: Hashtable full.\n");
                    return;
             }
        }
    }
    ptr->key = strdup(key);
    ptr->val = val;

    h[index] = ptr;
    printf("h[%d] = %s.\n", index, key);
}

int hGetVal(hashtable h, type key) {
    /*
     * returns val corresponding to key if present in h else -1.
     */
    int index = hGetIndex1(key);

    if(h[index] && strcmp(h[index]->key, key)) {
        index = hGetIndex2(key);
        if(h[index] && strcmp(h[index]->key, key)) {
               index = hLinearProbe(h, key, index);
               if(index == -1)
                      return -1;
        }
        else if(!h[index])
                return -1;
    }
    else if(!h[index])
        return -1;

    printf("index=%d ", index);
```

ABC Amber CHM Converter Trial version, http://www.processtext.com/abcchm.html

```
    return h[index]->val;
}
void printHash(hashtable h) {
     /*
      * print the hashtable.
      */
    int i;
    for(i=0; i<HASHSIZE; ++i)
        if(h[i]) {
                printf("%d: ", i);
                printf("%s=%d ", h[i]->key, h[i]->val);
                printf("\n");
        }
    }

    int main() {
        char s[MAXLEN];
        int i = 0;
        hashtable h = {"asd"};

        printf("Enter the string to be hashed: ");
        gets(s);

        while(*s) {
            hInsert(h, s, i++);
            printf("Enter the string to be hashed(enter to end): ");
            gets(s);
        }
        printf("Enter the string to be searched: ");
        gets(s);

        while(*s) {
           printf("%s was inserted at number %d.\n", s, hGetVal(h, s));
           printf("\nEnter the string to be searched(enter to end): ");
           gets(s);
        }
        printHash(h);

        return 0;
}
```

Explanation

1. Rehashing is one method of handling collisions. If a single application of the hash function results in a collision, and we detect that the space is already occupied by another element, we can use some other hash function to generate another index in the hash table. If this index is also already

filled, we can either use another hash function to generate another index or we can use linear probing or chaining. We use linear probing here to guarantee full utilization of the hash table in a finite amount of time.

2. We use simple `mod()` function as the first hash function (`hGetIndex1()`). We add the ASCII values of the input characters and apply `mod()` to get an index in the range of the hash table. We use a modification of this `mod()` function as the second hash function (`hGetIndex2()`). We add the products of the ASCII values of characters and their indices to get a final sum to which we apply the mod function to get the second index. If this slot is also filled, we use linear search (`hLinearProbe()`) over the hash table starting from index to the end of the hash table, and then starting from the start of the hash table to the index, to get an empty slot. If we do not find an empty slot, we output an error message. Otherwise the index of the empty slot is returned.
3. An identical procedure is used during searching (`hGetVal()`). It applies the first hash function to get the first index. If this is empty, –1 is returned. If it contains the node containing the search key, the value corresponding to that key is returned. If the key is different, we apply the second hash function to get another index. If this is empty, –1 is returned. If it contains the node containing the search key, the value corresponding to that key is returned. If the key is different, we apply linear probing (`hLinearProbe()`) to search for the key in the hash table. If we get such a node, the value corresponding to the key is returned. If such a node does not exist, an error message is printed.
4. Since linear probing (and not chaining) is used, the hash table is simply an array of pointers to nodes where each node contains only a key and value.
5. Example:
   - Let `HASHSIZE` = 23.
   - Let strings to be inserted be as follows: `'dj'`, `'na'`, `'id'`, `'q'`.
   - `hGetIndex1('dj')` returns 22, so it is inserted in hash table[22].
   - `hGetIndex1('na')` returns 0, so it is inserted in hash table[0].
   - `hGetIndex1('id')` returns 21, so it is inserted in hash table[21].
   - `hGetIndex1('q')` returns 21. Since the space is already filled by `'id'`, `hGetIndex2('q')` is called. It returns 22. But it is also filled by `'dj'`. So a linear search for an empty slot is done starting from index 22 (wrapping over the hash table). It finds that the next index 0 is filled with `'na'` and its next index 1 is empty. Hence `'q'` gets inserted in hash table[1].

Points to Remember

1. Since no deletions are taking place in the hash table, we can reduce the complexity of searching for an element. This is because during searching, if we get an empty slot, that means the search key cannot be present beyond that location. This follows from the predicate that a value is inserted into the first empty slot we get.
2. The hash table could have been an array of nodes instead of node pointers. But our implementation can save space if the `val` field is of a larger size and if many slots of the hash table are empty.
3. The complexities of both hash functions is O(n) where n is the average length of the string to be inserted. The complexity of linear probing is O(`HASHSIZE`) where `HASHSIZE` is the hashtable size.
4. The advantage of modular programming over `hash.c` is that the function `main()` remains the same even after changing the implementation of the hashing procedure.

Previous Next

ABC Amber CHM Converter Trial version, http://www.processtext.com/abcchm.html

Chapter 24: Problems in Stacks and Queues

PROBLEM: CONVERT AN INFIX EXPRESSION TO PREFIX FORM

Program

```
#include <stdio.h>
#include <string.h>
#include <ctype.h>

#define N 80

typedef enum {FALSE, TRUE} bool;

#include "stack.h"
#include "queue.h"

#define NOPS 7

char operators [] = "()^/*+-";
int priorities[] = {4,4,3,2,2,1,1};
char associates[] = " RLLLL";

char t[N]; char *tptr = t; // this is where prefix will be saved.

int getIndex( char op ) {
   /*
    * returns index of op in operators.
    */
   int i;
   for( i=0; i<NOPS; ++i )
       if( operators[i] == op )
              return i;
   return –1;
}

int getPriority( char op ) {
   /*
    * returns priority of op.
    */
   return priorities[ getIndex(op) ];
}
```

ABC Amber CHM Converter Trial version, http://www.processtext.com/abcchm.html

```
char getAssociativity( char op ) {
    /*
     * returns associativity of op.
     */
   return associates[ getIndex(op) ];
}
void processOp( char op, queue *q, stack *s ) {
    /*
     * performs processing of op.
     */
   switch(op) {
   case ')':
          printf( "\t S pushing )...\n" );
          sPush( s, op );
          break;
   case '(':
          while( !qEmpty(q) ) {
                 *tptr++ = qPop(q);
                 printf( "\tQ popping %c...\n", *(tptr-1) );
          }
          while( !sEmpty(s) ) {
                 char popop = sPop(s);
                 printf( "\tS popping %c...\n", popop );
                 if( popop == ')' )
                        break;
                 *tptr++ = popop;
          }
          break;
   default: {
          int priop;     // priority of op.
          char topop;    // operator on stack top.
          int pritop;    // priority of topop.
          char asstop;   // associativity of topop.
          while( !sEmpty(s) ) {
                 priop = getPriority(op);
                 topop = sTop(s);
                 pritop = getPriority(topop);
                 asstop = getAssociativity(topop);

                 if( pritop < priop || (pritop == priop && asstop == 'L') ||
topop == ')' ) // IMP.
                            break;
                 while( !qEmpty(q) ) {
                        *tptr++ = qPop(q);
```

ABC Amber CHM Converter Trial version, http://www.processtext.com/abcchm.html

```
                        printf( "\tQ popping %c...\n", *(tptr-1) );
                    }
                    *tptr++ = sPop(s);
                    printf( "\tS popping %c...\n", *(tptr-1) );
                }
                printf( "\tS pushing %c...\n", op );
                sPush( s, op );
                break;
            }
        }
}

bool isop( char op ) {
    /*
     * is op an operator?
     */
    return (getIndex(op) != -1);
}

char *in2pre( char *str ) {
    /*
     * returns valid infix expr in str to prefix.
     */
    char *sptr;
    queue q = {NULL};
    stack s = NULL;
    char *res = (char *)malloc( N*sizeof(char) );
    char *resptr = res;

    tptr = t;
    for( sptr=str+strlen(str)-1; sptr!=str-1; -sptr ) {
        printf( "processing %c tptr-t=%d...\n", *sptr, tptr-t );
        if( isalpha(*sptr) ) // if operand.
                qPush( &q, *sptr );
        else if( isop(*sptr) ) // if valid operator.
                processOp( *sptr, &q, &s );
        else if( isspace(*sptr) ) // if whitespace.
                ;
        else {
                fprintf( stderr, "ERROR:invalid char %c.\n", *sptr );
                return "";

        }
    }
```

```
    while( !qEmpty(&q) ) {
        *tptr++ = qPop(&q);
        printf( "\tQ popping %c...\n", *(tptr-1) );
    }
    while( !sEmpty(&s) ) {
        *tptr++ = sPop(&s);
        printf( "\tS popping %c...\n", *(tptr-1) );
    }
    *tptr = 0;
    printf( "t=%s.\n", t );
    for( -tptr; tptr!=t-1; -tptr ) {
        *resptr++ = *tptr;
    }
    *resptr = 0;

    return res;
}

int main() {
    char s[N];

    puts( "enter infix freespaces max 80." );
    gets(s);
    while(*s) {
        puts( in2pre(s) );
        gets(s);
    }

    return 0;
}
```

Explanation

1. In an infix expression, a binary operator separates its operands (a unary operator precedes its operand). In a postfix expression, the operands of an operator precede the operator, while in a prefix expression the operator precedes its operands. Like postfix, a prefix expression is parenthesis-free, that is, any infix expression can be unambiguously written in its prefix equivalent without the need for parentheses.
2. When an infix expression is converted to reverse-prefix, it is scanned from right to left. A queue of operands is maintained, noting that the order of operands in infix and prefix remains the same. Thus, while scanning the infix expression, whenever an operand is encountered, it is pushed in a queue. If the scanned element is a right parenthesis (‘)’), it is pushed in a stack of operators. If the scanned element is a left parenthesis (‘(‘), the queue of operands is emptied to the prefix output followed by popping of all the operators but excluding a right parenthesis in the operator stack.
3. If the scanned element is an arbitrary operator o, then the stack of operators is checked for operators with greater priority than the priority for o. Such operators are popped and written to the prefix output after emptying the operand queue. The operator o is finally pushed in the stack.
4. When the scanning of the infix expression is complete, first the operand queue and then the operator stack are emptied to the prefix output. Any whitespace in the infix input is ignored. Thus

the prefix output we get can be reversed to get the required prefix expression of the infix input.

5. **Example:** If the infix expression is *a***b*+*c*/*d*, then different snapshots of the algorithm while scanning the expression from right to left are as follows:

step	remaining expression	scanned element	queue of operands	stack of operators	prefix output
0	a*b+c/d	nil	empty	empty	nil
1	a*b+c/	d	d	empty	nil
2	a*b+c	/	d	/	nil
3	a*b+	c	d c	/	nil
4	a*b	+	empty	+	dc/
5	a*	b	b	+	dc/
6	a	*	b	* +	dc/
7	nil	a	b a	* +	dc/
8	nil	nil	empty	empty	dc/ba*+

The final prefix output we get is *dc*/*ba**+, whose reverse is +**ab*/*cd*, which is indeed the prefix equivalent of the input infix expression *a***b*+*c***d*. Note that all the operands are simply pushed to the queue in steps 1, 3, 5, and 7. In step 2, the operator / is pushed to the empty stack of operators.

In step 4, the operator + is checked against the elements in the stack. Since / (division) has higher priority than + (addition), the queue is emptied to the prefix output (thus we get '*dc*' as the output) and then the operator / is written (thus we get '*dc/*' as the output). The operator + is then pushed to the stack. In step 6, the operator * is checked against the stack elements. Since * has a higher priority than +, * is pushed to the stack. Step 8 signifies that all of the infix expression has been scanned. Thus, the queue of operands is emptied to the prefix output (to get '*dc*/*ba*'), followed by emptying of the stack of operators (to get '*dc*/*ba**+').

Points to Remember

1. A prefix expression is parenthesis-free.
2. When an infix expression is converted to its postfix equivalent, it is scanned from right to left. The prefix expression we get is the reverse of the required prefix equivalent.
3. Conversion of infix to prefix requires a queue of operands and a stack, as in the conversion of an infix to postfix.
4. The order of operands in a prefix expression is the same as that in its infix equivalent.
5. If the scanned operator o1 and the operator o2 at the stack top have the same priority, then the associativity of o2 is checked. If o2 is right associative, it is popped from the stack.

Previous Next

ABC Amber CHM Converter Trial version, http://www.processtext.com/abcchm.html

PROBLEM: IMPLEMENTATION OF TWO STACKS USING AN ARRAY

Two stacks are represented in an array `twostacks[0..N-1]`, such that one stack starts from start of the array and grows towards its end while the other one starts from the end of the array and grows towards the start. Thus at any time, the maximum number of elements that the two stacks together can accommodate is N. Write functions `Push(stacki, data)` and `Delete(stacki)` to add element data and to delete an element from stack number `stacki`, 1 <= `stacki` <= 2. The functions should be able to add elements to the stacks as long as there are fewer than N elements in both stacks together.

Program

```
#include <stdio.h>

#define N 10                    // combined size of the two stacks.
#define EINDEXOUTOFBOUND –1     // error code on overflow in the stacks.
#define SUCCESS 0               // success code.

typedef int type;                       // type of each data item.

type twostacks[N];              // stacks implemented using array.
int stop1 = –1;                         // pointer for stack 1.
int stop2 = N;                  // pointer for stack 2.

int sPush( int stacki, type data ) {
   /*
    * pushes data on top of stacki.
    * returns error on overflow.
    */
   if( stop2-stop1 == 1 ) // overflow.
      return EINDEXOUTOFBOUND;

   if( stacki == 1 ) { // first stack.
      twostacks[ ++stop1 ] = data;
   }
   else {              // second stack.
      twostacks[ -stop2 ] = data;
   }
   return SUCCESS;
}

int sDelete( int stacki ) {
   /*
    * deletes element at top from stacki.
    */
   printf( "deleting from stack %d...\n", stacki );
```

ABC Amber CHM Converter Trial version, http://www.processtext.com/abcchm.html

```
   if( stacki == 1 ) { // first stack.
      if( stop1 >= 0 )
            -stop1;
      else
            return EINDEXOUTOFBOUND;

   }
   else {          // second stack.
       if( stop2 < N )
               ++stop2;
       else
               return EINDEXOUTOFBOUND;
   }
   return SUCCESS;
}
void sPrint() {
    /*
     * prints the two stacks.
     */
   int i;
   for( i=0; i<=stop1; ++i )
       printf( "%d ", twostacks[i] );
   printf( ": " );
   for( i=stop2; i<N; ++i )
       printf( "%d ", twostacks[i] );
   printf( "\n" );
}

int main() {
    sPush(1,1);
    sPush(2,1);
    sPush(1,4);
    sPush(2,5);
    sPrint();
    sDelete(2);
    sDelete(2);
    sPrint();
    sDelete(2);
    sDelete(1);
    sDelete(1);
    sDelete(1);
    sPrint();
    sPush(2,2);
```

```
    sPush(1,9);
    sPrint();
    sDelete(1);
    sPrint();
    sDelete(2);
    sPrint();
    sPush(2,0);
    sPush(1,5);
    sPush(1,3);
    sPrint();
    sDelete(2);
    sPrint();

    return 0;
}
```

Explanation

1. The two stacks are characterized by their indices (stack pointers). Index 1 starts from –1 and goes up to N – 1 while index 2 starts from N and goes up to 0. When index 1 equals –1, it signifies that stack 1 is empty. When index 2 equals to N, that signifies that stack 2 is empty.
2. If the array is full, indices 1 and 2 point to consecutive elements. This situation is characterized as (index2 – index1 == 1).

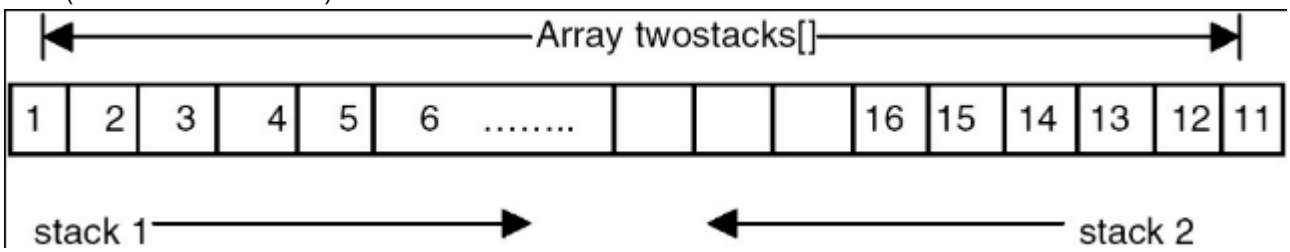

3. In `Push(stacki,data)`, this condition is checked to signify overflow. If space is available, insertion of the element proceeds. If `stacki` == 1 then index 1 is incremented and the data is inserted at the index. If `stacki` == 2, index 2 is decremented and the data is inserted at the index.
4. In `Delete(stacki)`, the condition for underflow is checked. If `stacki` == 1 then index 1 == –1 signifies underflow of stack 1. If `stacki` == 2 then index 2 == N signifies underflow of stack 2. If an element exists, then deletion of the element at the stack top proceeds. If `stacki` == 1 then index 1 is decremented, whereas if `stacki` == 2 then index 2 is incremented.

Points to Remember

1. To implement two stacks using an array, the two stacks should grow in opposite directions.
2. The maximum number of elements that the two stacks together can accommodate at any time is equal to the size of the array.
3. For an empty stack, making the stack pointer point to an element beyond the first element helps in an insertion, without needing to check for an extra condition. Thus, since we have a stack index/value of –1 during insertion, we need simply to increment it to point to the next empty slot. This is not possible with pointers as we need to explicitly check it for being `NULL` as in
4.
5. `if( stacktop == NULL )`
6. `error("stack empty.");.`

Previous Next

ABC Amber CHM Converter Trial version, http://www.processtext.com/abcchm.html

Chapter 25: Problems in Linked Lists

PROBLEM: IMPLEMENTATION OF POLYNOMIALS USING LINKED LISTS

Write functions to add, subtract, and multiply two polynomials represented as lists. Also, write a function to evaluate the polynomial for a given value of its variable.

Program

```
/* compile with -lm option. */

#include <stdio.h>
#include <stdarg.h>
#include <math.h>

typedef struct node node;

typedef int type;

typedef node *polynomial;

struct node {
   type coeff;
   type power;
   node *next;
};

polynomial createPoly(int n, ...) {
   /*
   * create a list from the arguments.
   * n is the number of nodes which will be created.
   * thus after n there should be 2n arguments: (coeff, power) pairs.
   * it is assumed that their powers are decreasing.
   */
   va_list vl;
   polynomial p = NULL;
   int i;

   va_start(vl, n);

   for(i=0; i<n; ++i) {
      node *ptr = (node *)malloc(sizeof(node));
      ptr->coeff = va_arg(vl, int);
```

ABC Amber CHM Converter Trial version, http://www.processtext.com/abcchm.html

```
      ptr->power = va_arg(vl, int);
      ptr->next = p;
      p = ptr;
   }
   va_end(vl);

   return p;
}

void pPrint(polynomial p) {
   node *ptr;

   for(ptr=p; ptr; ptr=ptr->next)
      printf("%dx%d + ", ptr->coeff, ptr->power);
   printf("\n");
}

polynomial pSub(polynomial p1, polynomial p2) {
   /*
    * return p1-p2 recursively.
    */
   node *ptr = (node *)malloc(sizeof(node));

      if(p1 && p2 && p1->power == p2->power) {
            ptr->coeff = p1->coeff - p2->coeff;
            ptr->power = p1->power;
            ptr->next = pSub(p1->next, p2->next);
      }
      else if(p1 && ((p2 && p1->power < p2->power) || !p2)) {
             ptr->coeff = p1->coeff;
            ptr->power = p1->power;
            ptr->next = pSub(p1->next, p2);
      }
      else if(p2 && ((p1 && p1->power > p2->power) || !p1)) {
              ptr->coeff = -p2->coeff;
              ptr->power = p2->power;
              ptr->next = pSub(p1, p2->next);
      }
      else { // p1 == p2 == NULL.
             free(ptr);
             return NULL;
      }
   return ptr;
}
```

ABC Amber CHM Converter Trial version, http://www.processtext.com/abcchm.html

```
polynomial pAdd(polynomial p1, polynomial p2) {
   /*
    * return p1+p2 recursively.
    */
   node *ptr = (node *)malloc(sizeof(node));

      if(p1 && p2 && p1->power == p2->power) {
              ptr->coeff = p1->coeff + p2->coeff;
              ptr->power = p1->power;
              ptr->next = pAdd(p1->next, p2->next);
      }
      else if(p1 && ((p2 && p1->power < p2->power) || !p2)) {
              ptr->coeff = p1->coeff;
              ptr->power = p1->power;
              ptr->next = pAdd(p1->next, p2);
      }
      else if(p2 && ((p1 && p1->power > p2->power) || !p1)) {
              ptr->coeff = p2->coeff;
              ptr->power = p2->power;
              ptr->next = pAdd(p1, p2->next);
      }
      else { // p1 == p2 == NULL.
              free(ptr);
              return NULL;
      }
   return ptr;
}

   void pInsertOrAdd(polynomial p, node *ptr) {
      /*
       * p->next anytime contains a partial product.
       * add ptr at appropriate place in it keeping powers in order.
       */
      node *curr, *prev;

      for(prev=p, curr=prev->next; curr && curr->power < ptr->power;
prev=curr, curr=curr->next)
           ;
      // prev will always be NON-NULL :).
      if(curr && curr->power == ptr->power)
         curr->coeff += ptr->coeff, free(ptr);
      else
         prev->next = ptr, ptr->next = curr;
```

ABC Amber CHM Converter Trial version, http://www.processtext.com/abcchm.html

```
}
polynomial pMult(polynomial p1, polynomial p2) {
 /*
  * return p1*p2.
  */
node p3, *ptr1, *ptr2, *ptr;

p3.next = NULL;

for(ptr1=p1; ptr1; ptr1=ptr1->next)
    for(ptr2=p2; ptr2; ptr2=ptr2->next) {
            ptr = (node *)malloc(sizeof(node));
            ptr->coeff = ptr1->coeff * ptr2->coeff;
            ptr->power = ptr1->power + ptr2->power;
            pInsertOrAdd(&p3, ptr);
    }
return p3.next;
}

int pEval(polynomial p1, int x) {
/*
 * evaluate p1 at x.
 */
node *ptr;
int result = 0;
   for(ptr=p1; ptr; ptr=ptr->next)
       result += ptr->coeff * pow(x, ptr->power);

   return result;
}

int main() {
    polynomial p1 = createPoly(3, 3, 5, -1, 3, -10, 0),
                  p2 = createPoly(3, -2, 3, 0, 2, 20, 0);

   pPrint(p1);
   pPrint(p2);
   pPrint(pAdd(p1, p2));
   pPrint(pSub(p1, p2));
   pPrint(pMult(p1, p2));
   printf("value of p1 at x=%d is %d.\n", 2, pEval(p1, 2));

   return 0;
}
```

ABC Amber CHM Converter Trial version, http://www.processtext.com/abcchm.html

Explanation

1. A polynomial, such as *ax3+bx+c*, is represented by using a linked list of nodes. Each node contains a coefficient and a power of the variable x. Thus this above expression is stored as follows:

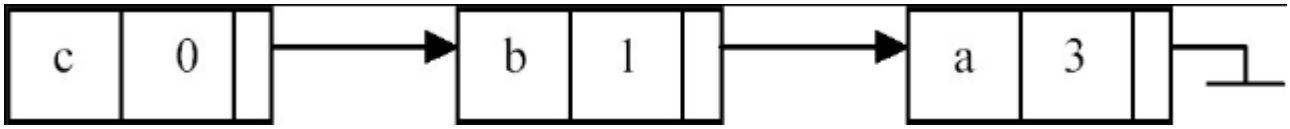

2. The function `createPoly()` creates a linked list of the given coefficients and powers sent to the function, using the variable number of arguments technique.
3. `pAdd(p1, p2)` adds polynomials p1 and p2 and returns the sum. It adds coefficients of the nodes of lists p1 and p2 containing the same power. The nodes in p1 and p2 for which there is no node in the other list with the same power is copied to the result as it is. The traversal of p1 and p2 is done such that the resulting list is also sorted based on power in ascending order. This traversal is done using recursion. The function `pSub()` for subtraction is identical. For example,

   (3 × 5 + 4 × 3 + 9) + (5 × 3 _ 4x) = (3 × 5 + 9 × 3 _ 4x + 9)

   and

   (3 × 5 + 4x 3 + 9) + (5 × 3 _ 4x) = (3 × 5 _ 1 × 3 + 4x + 9)
4. The function `pMult(p1, p2)` traverses each node n2 of list p2 for each node n1 of list p1, and prepares a new node whose coefficient is the product of the coefficients in the two nodes n1 and n2 and whose power is the sum of the powers of n1 and n2. It is possible to get the same resulting power for two multiplications. So the procedure `pInsertOrAdd()` traverses the resulting list p3 for occurrence of the node with the same power. If such a node n3 exists, then the new coefficient is added to the old coefficient of n3; otherwise a new node with the new coefficient is inserted in p3. For example,

   (3 × 5 + 4 × 3 + 9) × (5 × 3 _ 4x)
   = (15 × 8 _ 12 × 6) + (20 × 6 _ 16 × 4) + (45 × 3 _ 36x)
   = (15 × 8 + 8 × 6 _ 16 × 4 + 45 × 3 _ 36x).
5. The function pEval(p1, *x*) evaluates the expression in p1 at point x and returns the value. This is done by traversing the list p1 once and adding the values coefficient *$x_{\perp}$ power for each node. For example, the value of the polynomial (3x5+4x3+9) at *x*=2 is (3*$2_{\perp}$5+4*$2_{\perp}$3+9) = (96+32+9) = 137.
6. The complexity of `pAdd()` and `pSub()` is O(m1+m2), where m1 and m2 are the lengths of the input lists. The complexity of `pInsertOrAdd()` is O(m1+m2). Thus the complexity of `pMult()` is O(m1*m2*(m1+m2)). The complexity of `pEval()` is O(*m*) where *m* is the length of the input list.

Points to Remember

1. Polynomials can be represented using linked lists. This has the advantage of reduced space if many of the coefficients in the list are zero. Also, the procedures operating on polynomials represented by arrays and lists are not different as far as complexity is concerned.
2. To avoid sending a variable number of arguments to `createPoly()`, an array can be passed as a parameter.
3. The program should be compiled with the –lm option in order to link `libm` library for the function `pow()`.

Previous Next

ABC Amber CHM Converter Trial version, http://www.processtext.com/abcchm.html

PROBLEM: IMPLEMENTATION OF CIRCULAR LISTS BY USING ARRAYS

A linear list is maintained circularly in an array `clist[0...N-1]` with rear and front set up as for circular queues. Write functions to delete the k-th element in the list and to insert an element e immediately after the k-th element.

Program

```
#include <stdio.h>
#define N 10                // size of the list.
#define FIRSTINDEX 0 // index of first element in the list.
#define ILLEGALINDEX -1     // illegal index - for special cases.
#define EINDEXOUTOFBOUND -1 // error code on overflow in the list.
#define SUCCESS 0           // success code.

typedef int type;           // type of each data item.

type clist[N];          // list implemented using array.
int front = ILLEGALINDEX;   // points to first element in the list.
int rear;                           // points to last element in the list.

int lPush( type data ) {
/*
 * appends 'data' to the end of the list if space is available.
 * otherwise returns error.
 */
if( front == ILLEGALINDEX ) { // list empty.
    front = rear = FIRSTINDEX;
}
else if( (rear+1)%N == front ) { // list overflow.
   return EINDEXOUTOFBOUND;
}
else      // normal case.
   rear = (rear+1)%N;   // %N for wrapping around of index.
   clist[rear] = data;
   return SUCCESS;
}

void lPrint() {
   /*
    * prints elements in the list from front to rear.
    */
   int i;
```

ABC Amber CHM Converter Trial version, http://www.processtext.com/abcchm.html

```
   int nelem = lGetNElements();

   for( i=0; i<nelem; ++i )
      printf( "%d ", clist[ (front+i)%N ] );
   printf( "\n" );
}

int lGetNElements() {
    /*
     * returns no of elements in the list.
     */
   if( front == ILLEGALINDEX )       // empty list.
      return 0;
   else if( front <= rear ) // no wrapping of rear.
      return (rear-front+1);
   else                                          // wrapping of rear.
      return (N-front+rear+1);
}

int lDeleteK( int k ) {
   /*
    * deletes k'th element in the list if present.
    * otherwise returns error.
    * k starts from 1.
    * this procedure may be improved by checking for number of elements
    * to be shifted after deleting k'th element. thus we can shift either
    * k+1..N elements or 1..K-1 elements.
    */
   int index, i;
   int nelem = lGetNElements();
   printf( "deleting %d'th element...\n", k );
   if( k > nelem || k < 1 )
       return EINDEXOUTOFBOUND;

   index = (front+k-1)%N;   // index of the element to be deleted.

   for( i=k+1; i<=nelem; ++i )
      clist[ (front+i-2)%N ] = clist[ (front+i-1)%N ];

   if( nelem == 1 ) // list is empty now.
       front = ILLEGALINDEX;
   else if( k == 1 )
       front = (front+1)%N;
   else
```

ABC Amber CHM Converter Trial version, http://www.processtext.com/abcchm.html

```
      rear = (rear-1+N)%N;

   return SUCCESS;
}

int lInsertAfterK( type data, int k ) {
   /*
    * inserts 'data' after k'th element in the list.
    * if list is full or k is out of bounds, error is returned.
    * k starts from 0.
    */
   int i, index;

   int nelem = lGetNElements();
   printf( "inserting %d after %d'th element...\n", data, k );
   if( k > nelem || k < 0 || nelem == N )
       return EINDEXOUTOFBOUND;
   if( nelem == 0 ) // list empty.
   front = rear = FIRSTINDEX;
   else
      rear = (rear+1)%N;

   index = (front+k)%N;   // index at which data should be inserted.

   for( i=nelem; i>k; -i )
      clist[ (front+i)%N ] = clist[ (front+i-1)%N ];
   clist[ (front+k)%N ] = data;
}
int main() {
   lInsertAfterK(100,0);
   lPrint();
   lPush(0);
   lPush(4);
   lPush(7);
   lPush(1);
   lPush(13);
   lPush(2);
   lPush(5);
   lPrint();
   lInsertAfterK(2,1);
   lPrint();
   lDeleteK(4);
   lPrint();
   lPush(6);
```

ABC Amber CHM Converter Trial version, http://www.processtext.com/abcchm.html

```
    lPush(3);
    lPush(23);
    lPrint();
    lDeleteK(9);
    lPrint();
    lInsertAfterK(20,9);
    lPrint();
    lDeleteK(10);
    lPrint();
    lInsertAfterK(20,0);
    lPrint();
    return 0;
}
```

Explanation

1. `clist[0...N-1]` is a global queue of integers. The `rear` and `front` are its two pointers (indices) maintained for insertion and deletion of elements. The rear points to the last element inserted in the queue while `front` points to the next element to be removed from the queue.
2. An empty queue is represented by front = –1. The `front` and `rear` are updated on insertions and deletions. Since the queue is circular and the array size is fixed, element e is inserted when rear = N – 1 goes to `clist[0]`, if it is empty. Also, after removal of an element from the queue when front = N – 1, front points to `clist[0]`, if it exists. Thus the indices `front` and `rear` wrap around in the range 0...N – 1.
3. The number of elements in the queue at any time (`lGetNElements()`) can be found using the following formula:

   Number of elements = 0 if front == –1.
   = rear – front + 1 if front <= rear.
   = N – front + rear + 1 otherwise.
4. To delete the k-th element (k > 0) (`lDeleteK()`), it is first checked to see if the number of elements in the queue is less than or equal to k. If there is a k- th element, its index in the array can be found using the formula (front+k–1)%N. After deletion of the element, all the elements after it are shifted back by one position and `rear` is updated. If k == 1, or if the deleted element was the last element in the queue, then `front` needs to be updated accordingly. For example, let the queue look like this:

   If k == 5, then after `lDeleteK()` runs, the queue looks like this:

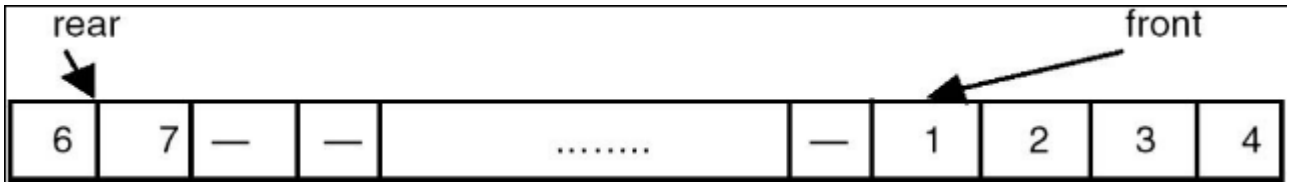

   Note that elements 6 and 7 have been shifted back by one position.
5. To insert an element after the k-th element (k >= 0) (`lInsertAfterK()`), again k is checked against the number of elements in the queue. The index for the new element would be `(front+k)%N`. To create space for the new element, all the elements after k-th element need to be shifted foward by one position. The new element can then be inserted and the indices `front` and `rear` are updated accordingly. For example, say the queue looks like the following:

ABC Amber CHM Converter Trial version, http://www.processtext.com/abcchm.html

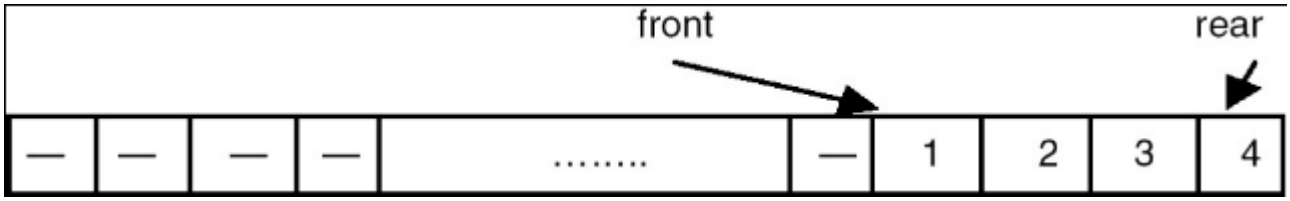

Then, after `lInsertAfterK()` is run with k == 4, the queue becomes

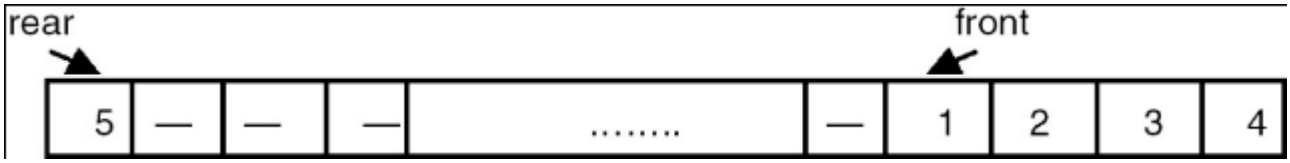

Note how the rear is wrapped around.

6. Because of the shifting required in insertion and deletion, the time complexity of both the functions is O(*n*). We note that if insertions and deletions take place at rear and front, respectively, the complexity remains O(1). The constant of proportionality of the complexity can be improved by checking the number of elements before and after the k-th element and then shifting the smaller number of the two.

Points to Remember

1. In an array-based circular queue implementation, the indices `front` and `rear` wrap around the N elements.
2. The index of a k-th element is calculated as `(front+k-1)%N`.
3. The number of elements in the queue is calculated as 0, `(rear–front+1)`, or (N–`front`+ `rear`+1) depending on whether the queue is empty (`front` == –1). There is no wrapping of indices (`front` <= `rear`) and `rear` is wrapped around (`front` > `rear`).
4. To insert an element after the k-th element, all the elements after it should be first shifted forward by one position. To delete an element at the k-th position, all the elements after it should be shifted back by one position.
5. Corner cases such as queue full and queue empty should be handled properly.

Previous Next

ABC Amber CHM Converter Trial version, http://www.processtext.com/abcchm.html

PROBLEM: REVERSING LINKS IN THE CASE OF CIRCULAR LIST

Write a function for a singly linked circular list that reverses the direction of the links.

Program

```
#include <stdio.h>

#define SUCCESS 0
#define ERROR -1

typedef int type;
typedef struct node node;

struct node {
   type data;
   node *next;
};

node *head = NULL;

int lInsert( type data ) {
   /*
    * inserts a new node containing data at start of the list.
    */
   node *ptr = (node *)malloc( sizeof(node) );
   ptr->data = data;
   if( head == NULL ) { // this is the first element in the list.
       ptr->next = ptr;
       head = ptr;
   }
   else {
      ptr->next = head->next;
      head->next = ptr;
   }
   return SUCCESS;
}

void lPrint() {
   node *ptr;

   if( head == NULL )
      return;
```

```
   else
      printf( "%d ", head->data );
      for( ptr=head->next; ptr!=head;
         ptr=ptr->next ) printf( "%d ", ptr->data );
      printf( "\n" );
   }
   int lReverse() {
      /*
       * insitu reverses the list.
       */
      node *curr, *prev, *next;

      printf( "reversing list...\n" );
      if( head == NULL )
          return SUCCESS;
      for( prev=head, curr=prev->next, next=curr->next; curr!=head; prev=curr,
curr=next, next=next->next ) {
          curr->next = prev;
   }
   head->next = prev;

   return SUCCESS;
}

int main() {
   lPrint();
   lInsert(1);
   lPrint();
   lInsert(2);
   lInsert(3);
   lInsert(4);
   lInsert(5);
   lInsert(6);
   lPrint();
   lReverse();
   lPrint();
   return 0;
}
```

Explanation

1. `main()` creates a linked list of integers and then calls `lReverse()` to reverse the list. Note that the list is circular.
2. The function `lReverse()` maintains three pointers, `prev`, `curr`, and `next`, while traversing the list. They point to consecutive nodes in the list. If the list is non-empty, then `prev` points to the head node while `curr` and next are accordingly assigned to the next elements in the list. The circular list is traversed until `curr == head` of the list. At every step, `curr->next` points to

`prev`. At the end of the loop, all the nodes in the list except the head node point to their original previous nodes. Thus at the end of the loop, `head->next` is assigned `prev` which is the last node in the list.

3. Example:

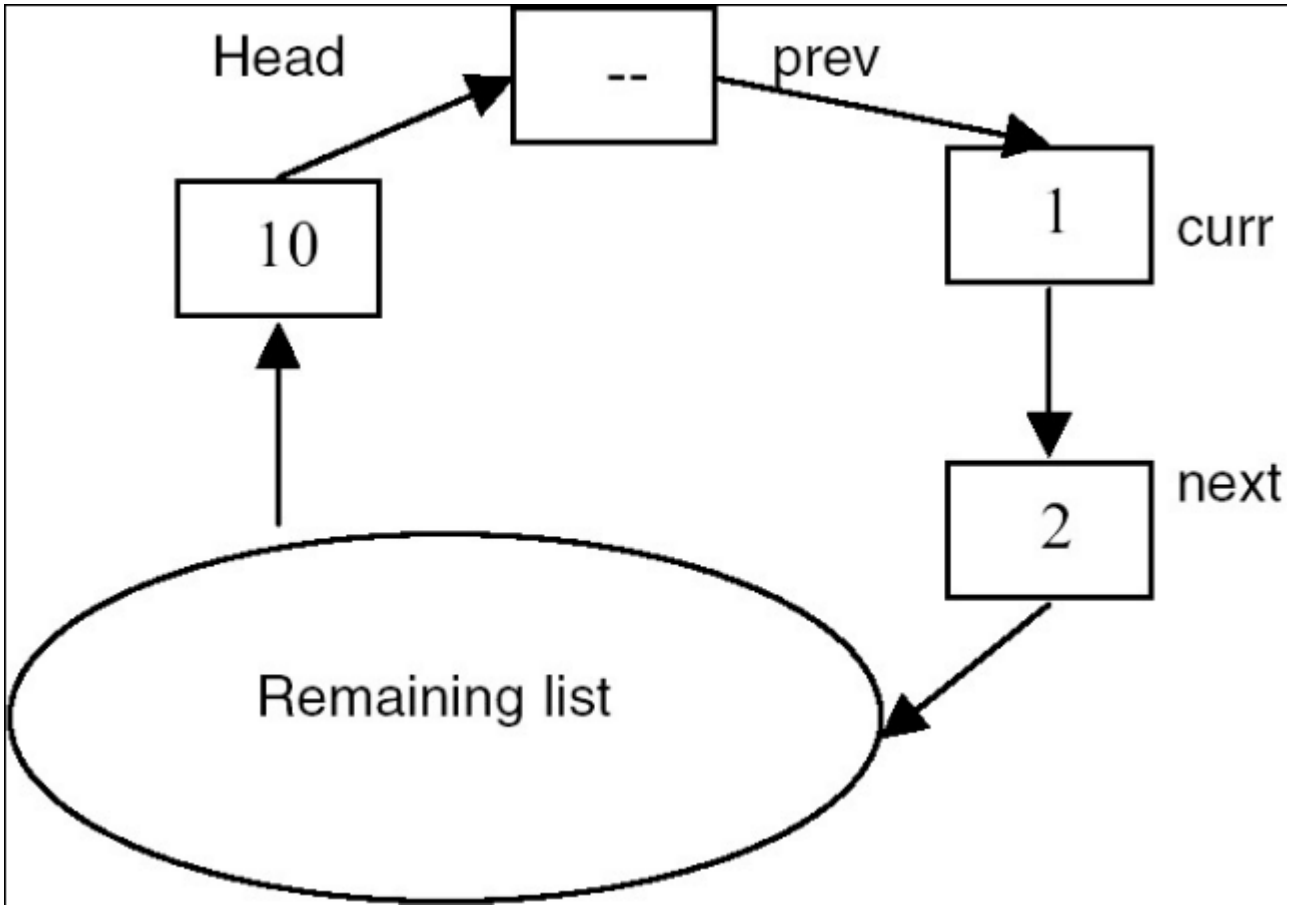

After reversal this list appears as shown here:

ABC Amber CHM Converter Trial version, http://www.processtext.com/abcchm.html

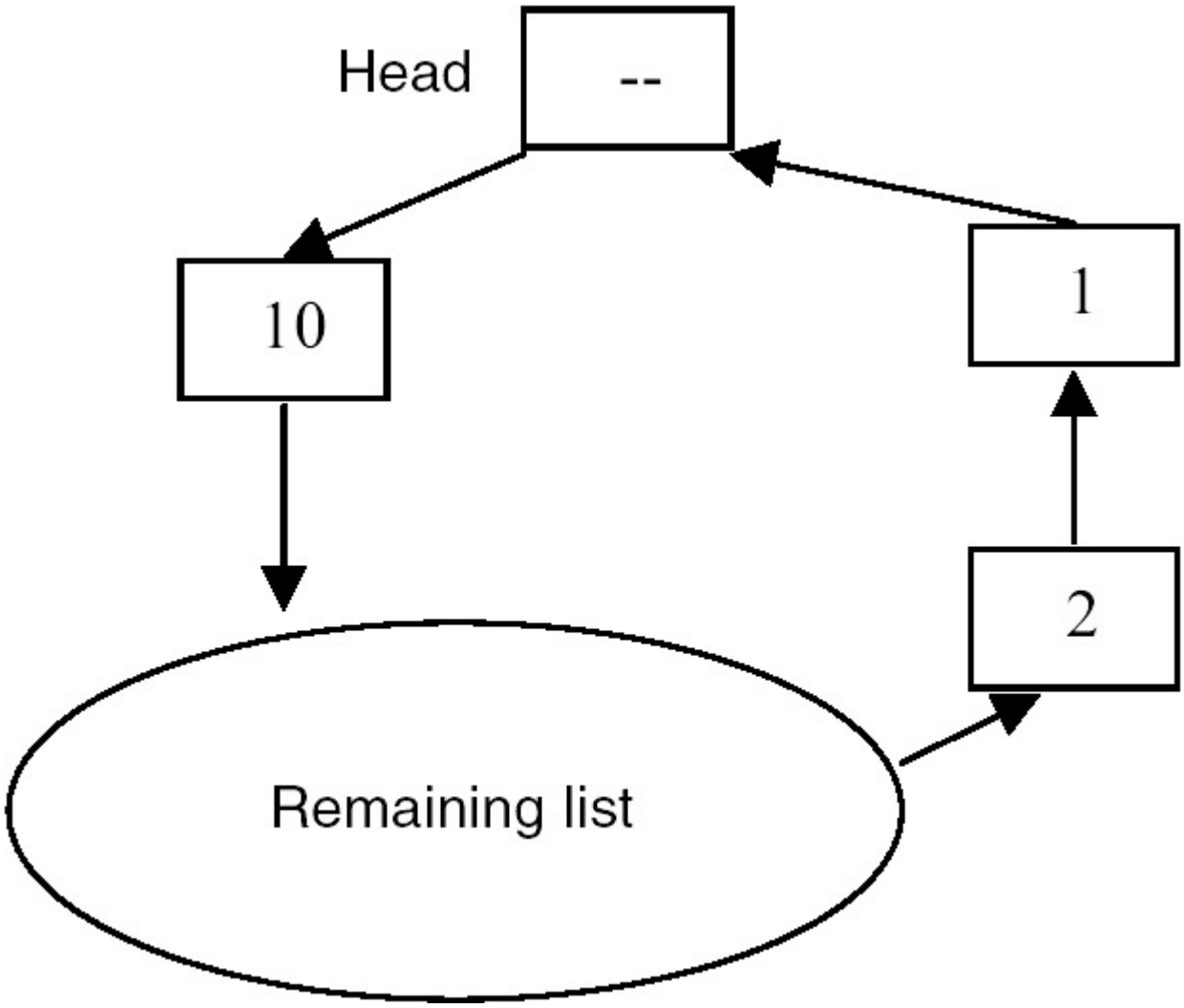

Points to Remember

1. Note that the loop advances `curr` as `curr=next` rather than `curr=curr->next`, because `curr->next` gets changed in the loop.
2. The complexity of the reversal procedure is O(n).
3. If the head is maintained as a fixed node, that is, an empty list is denoted by a single node rather than `NULL`, then the functions operating on the list get simplified.

Previous Next

ABC Amber CHM Converter Trial version, http://www.processtext.com/abcchm.html

PROBLEM: MEMORY MANAGEMENT USING LISTS

Design a storage management scheme where all requests for memory are of the same size, say K. Write functions to free and allocate storage in this scheme.

Program

```
#include <stdio.h>

#define N 90
#define K 10

#define SUCCESS 0
#define ERROR -1

typedef struct node node;

struct node {
   void *ptr; // points to free block of size K.
   node *next;
};

struct head {
   //int nnodes;
   node *next;
   char *bytes;            // mem will be allocated from this pool.
}freelist;

void init() {
   /*
    * initialize the memory space.
    */
   int i;
   void memfree( void * );

   //freelist.nnodes = 0;
   freelist.next = NULL;
   freelist.bytes = (char *)malloc(N);

   for( i=N/K-1; i>=0; -i ) {
      memfree( freelist.bytes+K*i );
   }
}
```

ABC Amber CHM Converter Trial version, http://www.processtext.com/abcchm.html

```
void *memalloc() {          // assume request to be of size K.
    /*
     * returns a void
     * pointer to area from freelist.
     */
    void *ptr;
   node *nodeptr;

   if( freelist.next == NULL )
      return (void *)NULL;
   nodeptr = freelist.next;
   ptr = nodeptr->ptr;
   freelist.next = freelist.next->next;
   free(nodeptr);           // this is standard free().

   return ptr;
}

void memfree( void *ptr ) {
    /*
     * adds ptr to freelist.
     */
   node *nodeptr;

   if( ptr == NULL )
      return;
   nodeptr       = (node *)malloc( sizeof(node) );
   nodeptr->ptr = ptr;
   nodeptr->next = freelist.next;
   freelist.next = nodeptr;
}

void print() {
   node *ptr;

   for( ptr=freelist.next; ptr!=NULL; ptr=ptr->next ) {
      printf( "%u ", ptr->ptr );
   }
   printf( "\n\n" );
}
int main() {
   void *p1, *p2, *p3, *p4;
   init();
   printf( "after init...\n" );
```

```
    print();
    p1 = memalloc();
    printf( "after memalloc(p1)...\n" );
    p2 = memalloc(); p3 = memalloc();
    print();
    memfree(p1); memfree(p2); memfree(p3);
    printf( "after memfree(p1)...\n" );
    print();

    return 0;
}
```

Explanation

1. Since all requests are of the same size, theoretically only one bit is required with each block of size K to tag it as free or allocated. However, we do not know the number of blocks (the size of the memory pool). So we need a list of such status bits. An array-based list would have been sufficient but the size of a memory pool can be very large. So we prefer a linked list of status bits.
2. The functions on the memory pool are `memfree()` and `memalloc()`, which need pointers to the memory areas to be exchanged between the memory manager and the user program. So instead of bits, we store only the pointers to the memory areas. We further shorten this list by storing only pointers to the free blocks in the lists. Thus we maintain a free-list of free pointers.
3. We take advantage of all the requests of the same size to make `memfree()` and `memalloc()` functions O(1). `memalloc()` returns the first free pointer in the list and `memfree()` adds the free pointer to the head of the free-list. The only loop in the program is required only once, for initializing the free-list at the start of the program. A global memory pool of size N acts as the free pool. It is divided into blocks of size K and pointers to the start of each block are inserted into the free-list.

Points to Remember

1. If all the requests are of the same size, then allocation and free operations can be done in O(1) time.
2. Instead of a separate free-list, each free block of size K can contain a pointer to the next free block of memory.

Previous Next

ABC Amber CHM Converter Trial version, http://www.processtext.com/abcchm.html

PROBLEM: MEMORY MANAGEMENT USING VARIOUS SCHEMES

Implement a memory allocation scheme by using the algorithms *first-fit*, *next-fit,* and *best-fit*.

Program

```
#include <stdio.h>

#define N 100

typedef struct node node;
typedef enum {FALSE, TRUE} bool;

struct node {
   char *ptr; // start addr.
   int size;          // size of the free block.
   node *next;        // next free block.
};

char mem[N];          // total memory pool.
node freelist;        /*
                * the freelist should be sorted on start addr.
                * this will ease coalescing adjacent blocks.
                      */

void init() {
   /*
    * init freelist to contain the whole mem.
    */
   node *ptr = (node *)malloc( sizeof(node) );
   ptr->ptr = mem;
   ptr->size = N;
   ptr->next = NULL;
   freelist.next = ptr;
}

void removenode( node *ptr, node *prev ) {
   /*
    * remove a node ptr from the list whose previous node is prev.
    */
   prev->next = ptr->next;
   free(ptr);
}
```

ABC Amber CHM Converter Trial version, http://www.processtext.com/abcchm.html

```
char *firstfit( int size ) {
    *
    * returns ptr to free pool of size size from freelist.
    */
   node *ptr, *prev;
   char *memptr;

   for( prev=&freelist, ptr=prev->next; ptr; prev=ptr, ptr=ptr->next )
      if( ptr->size > size ) {
             memptr = ptr->ptr;
             ptr->size -= size;
             ptr->ptr += size;
             return memptr;
      }
      else if( ptr->size == size ) {
            memptr = ptr->ptr;
            removenode( ptr, prev );
            return memptr;
      }
   return NULL;
}

char *nextfit( int size ) {
   /*
    * returns ptr to free pool of size size from freelist.
    * the free pool is second allocatable block instead of first.
    * if no second block then first is returned.
    */
   bool isSecond = FALSE;
   node *prev, *ptr;
   node *firstprev, *firstptr;

   for( prev=&freelist, ptr=prev->next; ptr; prev=ptr, ptr=ptr->next )
      if( ptr->size >= size && isSecond == FALSE ) {
             isSecond = TRUE;
             firstprev = prev;
             firstptr = ptr;
      }
      else if( ptr->size > size && isSecond == TRUE ) {
             char *memptr = ptr->ptr;
             ptr->size -= size;
             ptr->ptr += size;
             return memptr;
      }
```

ABC Amber CHM Converter Trial version, http://www.processtext.com/abcchm.html

```
      else if( ptr->size == size && isSecond == TRUE ) {
             char *memptr = ptr->ptr;
             removenode( ptr, prev );
             return memptr;
      }
   // ptr is NULL.
   ptr = firstptr;
   prev = firstprev;

   if( ptr->size > size && isSecond == TRUE ) {
       char *memptr = ptr->ptr;
       ptr->size -= size;
       ptr->ptr += size;
       return memptr;
   }
   else if( ptr->size == size && isSecond == TRUE ) {
       char *memptr = ptr->ptr;
       removenode( ptr, prev );
       return memptr;
   }
   else    // isSecond == FALSE
      return NULL;
}

char *bestfit( int size ) {
   /*
    * returns ptr to free pool of size size from freelist.
    * the allocated block's original size - size is min in the freelist.
    */
   node *ptr, *prev;
   char *memptr;
   int minwaste = N+1;
   node *minptr = NULL, *minprev;

   for( prev=&freelist, ptr=prev->next; ptr; prev=ptr, ptr=ptr->next )
      if( ptr->size >= size && ptr->size-size < minwaste ) {
             minwaste = ptr->size-size;
             minptr = ptr;
             minprev = prev;
      }
   if( minptr == NULL )    // could NOT get any allocatable mem.
       return NULL;
   ptr = minptr;
   prev = minprev;
```

ABC Amber CHM Converter Trial version, http://www.processtext.com/abcchm.html

```
   if( ptr->size > size ) {
            memptr = ptr->ptr;
            ptr->size -= size;
            ptr->ptr += size;
            return memptr;
   }
   else if( ptr->size == size ) {
              memptr = ptr->ptr;
              removenode( ptr, prev );
              return memptr;
   }
   return NULL;
}

void addtofreelist( char *memptr, int size ) {
   /*
    * add memptr of size to freelist.
    * remember that block ptrs are sorted on mem addr.
    */
   node *prev, *ptr, *newptr;

   for( prev=&freelist, ptr=prev->next; ptr && ptr->ptr<memptr; prev=ptr,
ptr=ptr->next )
      ;
   // memptr is to be added between prev and ptr.
   newptr = (node *)malloc( sizeof(node) );
   newptr->ptr = memptr;
   newptr->size = size;
   newptr->next = ptr;
   prev->next = newptr;
}

void coalesce() {
   /*
    * combine adj blocks of list if necessary.
    */
   node *prev, *ptr;

   for( prev=&freelist, ptr=prev->next; ptr; prev=ptr, ptr=ptr->next )
       // check for prev mem addr and size against ptr->ptr.
       if( prev != &freelist && prev->ptr+prev->size == ptr->ptr ) {//
prev->size += ptr->size;       //
             prev->next = ptr->next;
             free(ptr);
```

ABC Amber CHM Converter Trial version, http://www.processtext.com/abcchm.html

```
                ptr = prev;          // ).
        }
}

char *memalloc( int size ) {
   /*
    * return ptr to pool of mem of the size.
    * return NULL if NOT available.
    * ptr-sizeof(int) contains size of the pool allocated, like malloc.
    */
   char *ptr = bestfit( size+sizeof(int) );   // change this to
   firstfit() or nextfit().
          printf( "allocating %d using bestfit...\n", size );
          if( ptr == NULL )
              return NULL;
          *(int *)ptr = size;

   return ptr+sizeof(int);
}

void memfree( char *ptr ) {
   /*
    * adds ptr to freelist and combine adj blocks if necessary.
    * size of the mem being freed is at ptr-sizeof(int).
    */
   int size = *(int *)(ptr-sizeof(int));
   printf( "freeing %d...\n", size );
   addtofreelist( ptr-sizeof(int), size+sizeof(int) );
   coalesce();      // combine adjacent blocks.
}

void printfreelist() {
   node *ptr;
   printf( "\t" );
   for( ptr=freelist.next; ptr; ptr=ptr->next )
      printf( "{%u %d} ", ptr->ptr, ptr->size );
   printf( "\n" );
}

int main() {
   char *p1, *p2, *p3, *p4, *p5;
   init();
   printfreelist();
```

ABC Amber CHM Converter Trial version, http://www.processtext.com/abcchm.html

```
    p1 = memalloc(10);
    printfreelist();
    p2 = memalloc(15);
    printfreelist();
    p3 = memalloc(23);
    printfreelist();
    p4 = memalloc(3);
    printfreelist();
    p5 = memalloc(8);
    printfreelist();
    memfree(p1);
    printfreelist();
    memfree(p5);
    printfreelist();
    memfree(p3);
    printfreelist();
    p1 = memalloc(23);
    printfreelist();
    p1 = memalloc(23);
    printfreelist();
    memfree(p2);
    printfreelist();
    p1 = memalloc(3);
    printfreelist();
    memfree(p4);
    printfreelist();
    p2 = memalloc(1);
    printfreelist();
    memfree(p1);
    printfreelist();
    memfree(p2);
    printfreelist();

    return 0;
}
```

Explanation

1. A memory manager provides a pool of memory when requested (`memalloc()`) and frees a pool of memory (`memfree()`) to be used for the next allocation request. It maintains a free-list of pointers to memory blocks along with their sizes. Whenever there is a request for a free pool of memory having the size `size`, this free-list is searched for the appropriate block depending on the algorithm. If such a block is found, it is removed from the free-list and a pointer to it is returned. Whenever a pool of memory is freed using `memfree(p)`, the pointer `p` is added to the free-list. If possible, the adjacent blocks are combined using `coalesce()` to get a bigger free pool.
2. In a first-fit algorithm, the first free pool of memory is granted if it has sufficient size to satisfy the request. Thus, if sizes of free pools in the free-list are {10 9 20 34 43 12 22}, and the request is

for size 21, then the pointer to the pool pointed to by the node having size 34 is returned.

3. In a next-fit algorithm, the second free pool of memory is granted if it has sufficient size to satisfy the request. If no such second free pool is available, then the first such free pool is granted. Thus, if the free-list is as shown earlier, then a request for size 21 is fulfilled using the block having size 43.
4. In a best-fit algorithm, that free pool of memory is granted which retains the minimum amount of space after allocation. Thus, if the free-list is as shown earlier, then a request for size 21 is fulfilled by the block having size 22, as its residual memory is 22 – 21 = 1.
5. Note that the free-list is sorted on the address each node saves and not on size. Sorting on size can help improve the performance of `memalloc()` by a constant factor. The advantage of sorting on addresses is realized during coalescing of adjacent blocks. This happens when two adjacent blocks that are free are stored in the free-list in adjacent nodes. This may keep a request unsatisfied, even if a free pool of the requested size existed. So, we check for the start address of a block added to its size with the start address of the next block. If they match, we combine the two nodes. This procedure is followed until this condition is violated.
6. The complexity of each of the three algorithms is O(*n*) where *n* is the number of nodes in the free-list. It has been seen using experiments that first- and best-fit have nearly similar performances and somewhat better than the next-fit algorithm. The complexity of `memalloc()` is the same as the algorithm it implements. The complexity of `memfree()` is O(*n*), as it needs to insert the free pointer in a sorted list.

Points to Remember

1. In first-fit, the first free pool satisfying the request is returned. In next-fit, the second such free pool is returned. In best-fit, the free pool which leaves a free pool of minimum size after allocation is returned.
2. If the application requires two pointers to point to the same area, then the problem of a dangling pointer may arise in the system, where a pointer may point to an area that is not allocated. This happens when another pointer pointing to the same memory area frees the pool.
3. Garbage collection is the process of collecting the memory that was previously allocated but is no longer being used by the application. Garbage is generated as a result of bad programming practice, wherein we allocate memory as required but do not free it after its use. Algorithms using reference counts and the mark-and-sweep algorithm are generally used for garbage collection.

Previous Next

ABC Amber CHM Converter Trial version, http://www.processtext.com/abcchm.html

PROBLEM: GARBAGE COLLECTION—THE FIRST METHOD

Implement a `mark()` procedure used in garbage collection to mark all the nodes traversible from a head node by using a stack.

Program

```
/************************ mark1.s.c **************************/
#include <stdio.h>

typedef struct snode snode;
typedef list stype;
typedef struct snode *stack;

struct snode {
   stype op;
   snode *next;
};

bool sEmpty( stack *s ) {
   return (*s == NULL);
}

void sPush( stack *s, stype op ) {
   /*
    * pushes op in stack s.
    */
   snode *ptr = (snode *)malloc( sizeof(snode) );
   ptr->op = op;
   ptr->next = *s;
   *s = ptr;
}

stype sTop( stack *s ) {
   /*
    * returns top op from stack s without popping.
    */
   if( sEmpty(s) )
      return NULL;
   return (*s)->op;
}

stype sPop( stack *s ) {
   /*
```

ABC Amber CHM Converter Trial version, http://www.processtext.com/abcchm.html

```
    * pops op from top of stack s.
    */
   snode *ptr = *s;
   stype op;

   if( sEmpty(s) )
      return NULL;
   *s = (*s)->next;
   op = ptr->op;
   free(ptr);

   return op;
}

/************************ mark1.c ***************************/
#include <stdio.h>

typedef struct node node;
typedef int type;
typedef enum {FALSE, TRUE} bool;
typedef node *list;

#include "mark1.s.c"

struct node {
   bool mark;
   type val;
   node *horiz;
   node *vert;
};

list newNode() {
   /*
    * return a new node.
    */
   return (list)calloc(1, sizeof(node));
}

list createList() {
   /*
    * return a dummy list created.
    */
   list ptr;
   snode *s = NULL;
```

ABC Amber CHM Converter Trial version, http://www.processtext.com/abcchm.html

```
list sixptr;
list nineptr;

ptr = newNode();
sPush(&s, ptr);
ptr->val = 1;
ptr->horiz = newNode();
ptr = ptr->horiz;
sPush(&s, ptr);
ptr->val = 2;
ptr->vert = newNode();
ptr = ptr->vert;
sPush(&s, ptr);
ptr->val = 3;
ptr->vert = newNode();
ptr = ptr->vert;
ptr->val = 4;
ptr = sPop(&s);
ptr->horiz = newNode();
ptr = ptr->horiz;
ptr->val = 5;
ptr->horiz = newNode();
ptr = ptr->horiz;
sPush(&s, ptr);
sixptr = ptr;
ptr->val = 6;
ptr->vert = newNode();
ptr = ptr->vert;
ptr->val = 7;
ptr = sPop(&s);
ptr->horiz = newNode();
ptr = ptr->horiz;
ptr->val = 8;
ptr = sPop(&s);
ptr->horiz = newNode();
ptr = ptr->horiz;
sPush(&s, ptr);
nineptr = ptr;
ptr->val = 9;
ptr->vert = newNode();
ptr = ptr->vert;
ptr->val = 10;
ptr->horiz = newNode();
ptr = ptr->horiz;
```

ABC Amber CHM Converter Trial version, http://www.processtext.com/abcchm.html

```
   ptr->val = 11;
   ptr = sPop(&s);
   ptr->horiz = newNode();
   ptr = ptr->horiz;
   ptr->vert = nineptr;   // an internal link.
   ptr->val = 12;
   ptr->horiz = newNode();
   ptr = ptr->horiz;
   sPush(&s, ptr);
   ptr->val = 13;
   ptr->vert = newNode();
   ptr = ptr->vert;
   ptr->val = 14;
   ptr->horiz = sixptr;   // an internal link.
   ptr = sPop(&s);
   return sPop(&s);
}

void markList(list ptr) {
   /*
    * print the horiz and vert lists iteratively using a stack.
    */
   snode *s = NULL;
   list horiz;

   if(!ptr || ptr->mark)
      return;

   ptr->mark = TRUE;
   printf("marked=%d.\n", ptr->val);
   sPush(&s, ptr);

   while(!sEmpty(&s)) {
      ptr = sPop(&s);
      do {
                     horiz = ptr->horiz;
                     if(horiz && horiz->mark == FALSE) {
                     horiz->mark = TRUE;
                     printf("marked=%d.\n", horiz->val);
                     sPush(&s, horiz);
         }
         ptr = ptr->vert;
         if(!ptr || ptr->mark)
               break;
```

ABC Amber CHM Converter Trial version, http://www.processtext.com/abcchm.html

```
            ptr->mark = TRUE;
            printf("marked=%d.\n", ptr->val);
         } while(TRUE);
      }
   }

void markListRec(list ptr) {
   /*
    * mark the list pointed to by ptr recursively.
    */
   for(; ptr && !ptr->mark; ptr=ptr->horiz) {
      ptr->mark = TRUE;
      printf("marked=%d.\n", ptr->val);
      markListRec(ptr->vert);
   }
}

int main() {
   list head = createList();
   markListRec(head);

   return 0;
}
```

Explanation

1. An algorithm called *mark-and-sweep* is used for garbage collection. In this, from every variable, memory is traversed and marked as used. Then a traversal over the whole memory is done to add all the unmarked nodes to the free-list, thus collecting the garbage. The former is called `mark` while the latter is called `sweep`.
2. We implement the marking procedure here. We assume the node structure as follows:
3.
4.
5. `struct node {`
6. `   bool mark;`
7. `   type val;`
8. `   node *horiz;`
9. `   node *vert;`
10. `};`

Thus the lists are generalized and can grow in both horizontal and vertical directions.

11. The recursive marking algorithm is as shown here:
12.
13. `markListRec(ptr) {`
14. `   for(; ptr && !ptr->mark; ptr=ptr->horiz) {`
15. `      ptr->mark = TRUE;`
16. `      markListRec(ptr->vert);`
17. `   }`
18. `}`

This procedure uses the system stack for recursion (internally).

19. The iterative procedure `markList(ptr)` uses an explicit stack to store the nodes. It contains a

nested loop in which the list is traversed horizontally and vertically. The next node on the horizontal list is marked and pushed on stack and the whole vertical list is then traversed. The same strategy is used for each node in the vertical list. Whenever a node is visited, it is checked to see if it was marked. If yes, then it is not processed; otherwise, it is marked.

20. **Example**: The function `createlist()` creates an arbitrary list structure as shown here.

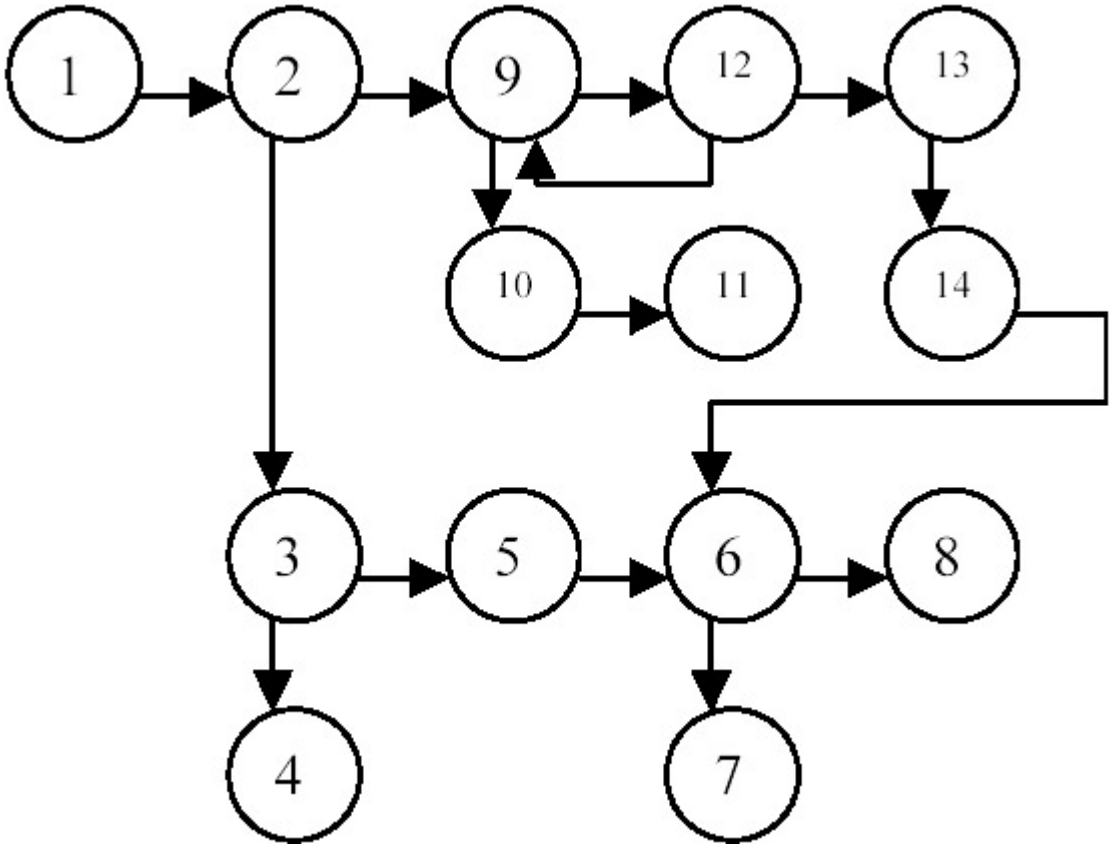

Different steps of the algorithm:

STEP	PTR	PTR->MARK	HORIZ	HORIZ->MARK	STACK	OUTPUT
0	1	F	—	—	1	1
1	1	T	2	F	2	1 2
2	2	T	9	F	9	1 2 9
3	3	F	9	T	9	1 2 9 3
4	3	T	5	F	9 5	1 2 9 3 5
5	4	F	5	T	9 5	1 2 9 3 5 4
6	5	T	6	F	9 6	1 2 9 3 5 4 6
7	6	T	8	F	9 8	1 2 9 3 5 4 6
8	7	F	8	T	9 8	1 2 9 3 5 4 6 8 7
9	8	T	nil	—	9	1 2 9 3 5 4 6 8 7
10	9	T	12	F	12	1 2 9 3 5 4 6 8 7 12
11	10	F	12	F	12	1 2 9 3 5 4

STEP	PTR	PTR->MARK	HORIZ	HORIZ->MARK	STACK	OUTPUT
						6 8 7 12 10
12	10	T	11	F	12 11	1 2 9 3 5 4 6 8 7 12 10 11
13	11	T	11	T	12	1 2 9 3 5 4 6 8 7 12 10 11
14	12	T	13	F	13	1 2 9 3 5 4 6 8 7 12 10 11 13
15	9	T	13	T	13	1 2 9 3 5 4 6 8 7 12 10 11 13
16	13	T	nil	—	empty	1 2 9 3 5 4 6 8 7 12 10 11 13
17	14	F	6	T	empty	1 2 9 3 5 4 6 8 7 12 10 11 13 14
18	14	T	6	T	empty	1 2 9 3 5 4 6 8 7 12 10 11 13 14

Thus in each step, the horizontal node is pushed as the return point and the whole vertical list is traversed. The return point is then popped and the procedure is continued until the stack becomes empty.

In step 9, since 8 is already marked, nothing is output. In step 14, `ptr` points to 12, which is marked, and `horiz` points to 13, which is unmarked. Thus it marks 13 and pushes it on stack. In the next step, the vertical list is traversed and `ptr` points to 9 while `horiz` is still 13. Since 9 is already marked, it is left and 13 is popped. `horiz` is now nil. Now the vertical list of 13 is traversed and `ptr` points to 14, which is unmarked, and so is marked. `horiz` now points to 6, which is marked, so nothing is done to it. A vertical pointer of 14 is traversed and it is found to be nil, so the inner loop quits. The stack is empty at this point, so the outer loop also quits and the procedure terminates.

Points to Remember

1. A simple recursive procedure such as `markListRec()` can be more readable and compact than its iterative version `markList()`.
2. The complexity of the marking algorithm is O(*e*), where *e* is equal to the number of links in the graph.
3. To mark all the memory traversible from program variables, `markList()` should be called for each of the variables.
4. There is a serious caveat in using this algorithm for garbage collection. Usually, garbage is created when the user runs out of memory. This algorithm, however, requires a stack to work, so it will not proceed when there is not enough memory. So an algorithm that does not require more than a constant amount of extra memory should be used for garbage collection.

Previous Next

ABC Amber CHM Converter Trial version, http://www.processtext.com/abcchm.html

PROBLEM: GARBAGE COLLECTION— THE SECOND METHOD

Implement the marking procedure used in garbage collection without using more than a constant amount of memory.

Program

```
/************************ mark2.s.c *************************/
#include <stdio.h>

typedef struct snode snode;
typedef list stype;
typedef struct snode *stack;

struct snode {
   stype op;
   snode *next;
};
bool sEmpty( stack *s ) {
   return (*s == NULL);
}

void sPush( stack *s, stype op ) {
   /*
    * pushes op in stack s.
    */
   snode *ptr = (snode *)malloc( sizeof(snode) );
   ptr->op = op;
   ptr->next = *s;
   *s = ptr;
}

stype sTop( stack *s ) {
   /*
    * returns top op from stack s without popping.
    */
   if( sEmpty(s) )
      return NULL;
   return (*s)->op;
}

stype sPop( stack *s ) {
   /*
    * pops op from top of stack s.
```

ABC Amber CHM Converter Trial version, http://www.processtext.com/abcchm.html

```
    */
   snode *ptr = *s;
   stype op;

   if( sEmpty(s) )
      return NULL;
   *s = (*s)->next;
   op = ptr->op;
   free(ptr);

   return op;
}
   /************************ mark2.c ***************************/
#include <stdio.h>

typedef struct node node;
typedef int type;
typedef enum {FALSE, TRUE} bool;
typedef node *list;

struct node {
   bool mark;
   bool tag;
   type val;
   node *horiz;
   node *vert;
};

#include "mark2.s.c"

list newNode() {
   /*
    * return a new node.
    */
   list ptr = (list)calloc(1, sizeof(node));
   return ptr;
}

list createList() {
   /*
    * return a dummy list created.
    */
   list ptr;
   snode *s = NULL;
```

```
list sixptr;
list nineptr;

ptr = newNode();
sPush(&s, ptr);
ptr->val = 1;
ptr->horiz = newNode();
ptr = ptr->horiz;
sPush(&s, ptr);
ptr->val = 2;
ptr->vert = newNode();
ptr = ptr->vert;
sPush(&s, ptr);
ptr->val = 3;
ptr->vert = newNode();
ptr = ptr->vert;
ptr->val = 4;
ptr = sPop(&s);
ptr->horiz = newNode();
ptr = ptr->horiz;
ptr->val = 5;
ptr->horiz = newNode();
ptr = ptr->horiz;
sPush(&s, ptr);
sixptr = ptr;
ptr->val = 6;
ptr->vert = newNode();
ptr = ptr->vert;
ptr->val = 7;
ptr = sPop(&s);
ptr->horiz = newNode();
ptr = ptr->horiz;
ptr->val = 8;
ptr = sPop(&s);
ptr->horiz = newNode();
ptr = ptr->horiz;
sPush(&s, ptr);
nineptr = ptr;
ptr->val = 9;
ptr->vert = newNode();
ptr = ptr->vert;
ptr->val = 10;
ptr->horiz = newNode();
ptr = ptr->horiz;
```

ABC Amber CHM Converter Trial version, http://www.processtext.com/abcchm.html

```
   ptr->val = 11;
   ptr = sPop(&s);
   ptr->horiz = newNode();
   ptr = ptr->horiz;
   ptr->vert = nineptr;   // an internal link.
   ptr->val = 12;
   ptr->horiz = newNode();
   ptr = ptr->horiz;
   sPush(&s, ptr);
   ptr->val = 13;
   ptr->vert = newNode();
   ptr = ptr->vert;
   ptr->val = 14;
   ptr->horiz = sixptr;   // an internal link.
   ptr = sPop(&s);

   return sPop(&s);
}

void markList(list ptr) {
   /*
    * print the horiz and vert lists iteratively without using a stack.
    */
   list p, q, t;

   p = ptr; t = NULL;
   do {
      printf("p->val=%d.\n", p->val);
      q = p->vert;
      if(q)
            if(q->mark == FALSE && q->tag == FALSE) {
                   q->mark = TRUE; p->tag = TRUE;
                   p->vert = t; t = p;
                   p = q;
            }
            else {
                  q->mark = TRUE;
label:
                  q = p->horiz;
                  if(q)
                         if(q->mark == FALSE && q->tag == FALSE) {
                                q->mark = TRUE; p->horiz = t;
                                t = p; p = q;
                         }
```

ABC Amber CHM Converter Trial version, http://www.processtext.com/abcchm.html

```
                        else {
                              q->mark = TRUE;
label2:
                              while(t) {
                                      q = t;
                                      if(q->tag) {
                              t = q->vert; q->vert = p;
                              q->tag = FALSE; p = q;
                                      goto label;
                                      }
                              t = q->horiz; q->horiz = p;
                                      p = q;
                              }
                           }
                     else
                        goto label2;
                }
         else
               goto label;
      } while(t);
}

int main() {
   list head = createList();
   markList(head);

   return 0;
}
```

Explanation

1. The node structure is assumed to be as follows.
2.
3. `struct node {`
4. `  bool mark;`
5. `  bool tag;`
6. `  type val;`
7. `  node *horiz;`
8. `  node *vert;`
9. `};`

   Thus, using `horiz` and `vert`, generalized lists can be created containing data in `val`. `mark` is used for marking the nodes as visited or not. An additional Boolean tag is needed since we are not using an extra amount of memory in the algorithm, except for a few pointers. The `mark` and `tag` fields are initially `FALSE` for each node.

   The explicit stack is used for creating the list (`createList()`), not for marking the nodes.
10. This algorithm modifies some of the links in the list. However, by the time it finishes its task, the list structure is restored. Starting from `ptr`, `markList()` traces all possible paths made up of `horiz` and `vert`. Whenever a choice is to be made, the `vert` direction is explored first. Instead

of maintaining a stack of return points, we now maintain the path taken from `ptr` to the node `p` that is currently being examined. This path is maintained by changing some of the pointers along the path from `ptr` to `p`.

11. **Example**: Consider this example list. We omit the `val` field as it is not important here.

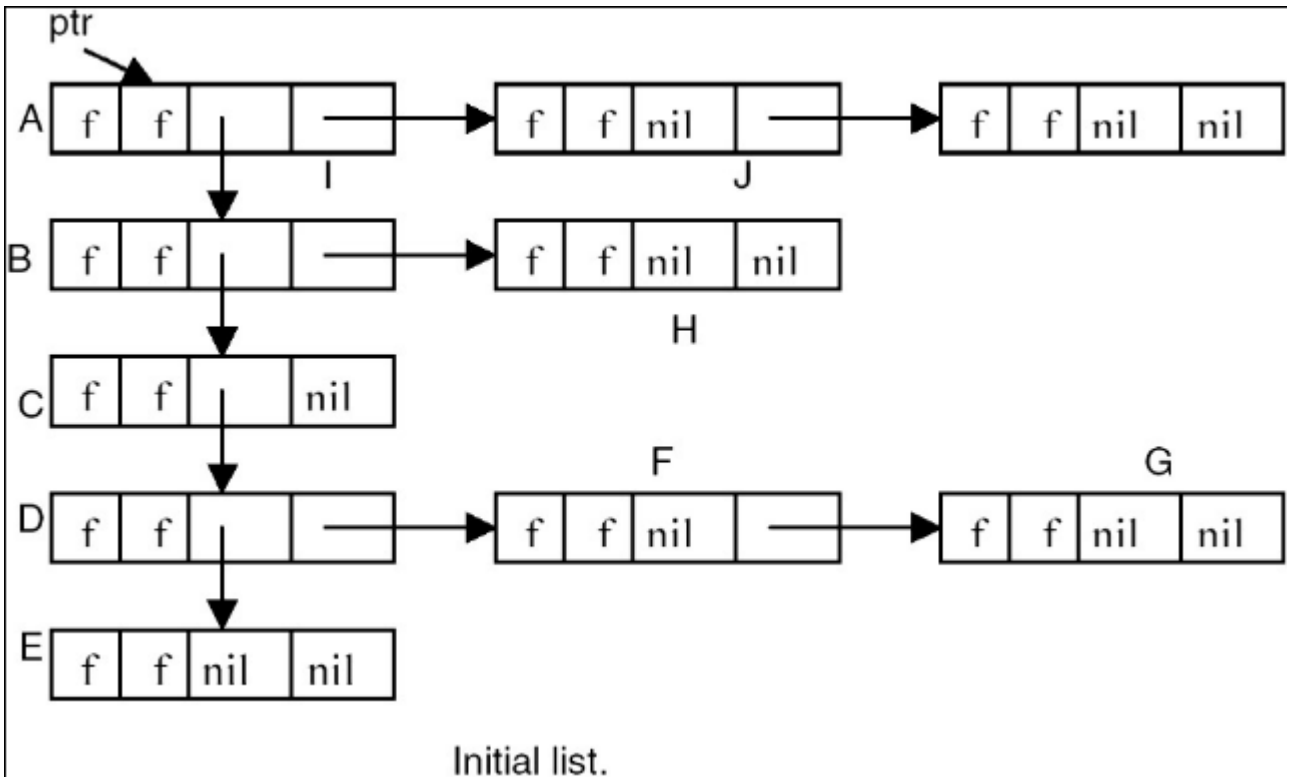

Initial list.

Initially, all nodes except node A are unmarked. From A we can move down to B or right to I. This algorithm always moves down when faced with such an alternative. We use `p` to point to the node currently being examined and `t` to point to the node preceding `p` in the path from `ptr` to `p`. The path `t` to `ptr` will be examined as a chain composed of the nodes on this `t - ptr` (read as "`t` to `ptr`") path. If we advance from node `p` to node `q`, then either `q=p->horiz` or `q=p->vert`, and `q` will become the node currently being examined. The node preceding `q` on the `ptr-q` path is `p`, and so the path list must be updated to represent the path from `p` to `ptr`. This is done simply by adding the node `p` to the `t-ptr` path that has been already constructed. Nodes will be linked onto this path through either their `vert` or `horiz` field. When node `p` is added to the path chain, `p` is linked to `t` via its `vert` field, if `q=p->vert`. When `q=p->horiz`, `p` is linked to `t` via its `horiz` field. In order to be able to determine whether a node on the `t-ptr` path list is linked through either the `vert` or `horiz` field, we make use of the `tag` field. When `vert` is used for linking, this `tag` will be `TRUE`. Thus, for nodes on `t-ptr` path we have:

```
tag = FALSE if the node is linked via horiz field.
    = TRUE if the node is linked via vert field.
```

The `tag` will be reset to `FALSE` when the node gets off the `t-ptr` path list. Different snapshots of the list are shown here:

ABC Amber CHM Converter Trial version, http://www.processtext.com/abcchm.html

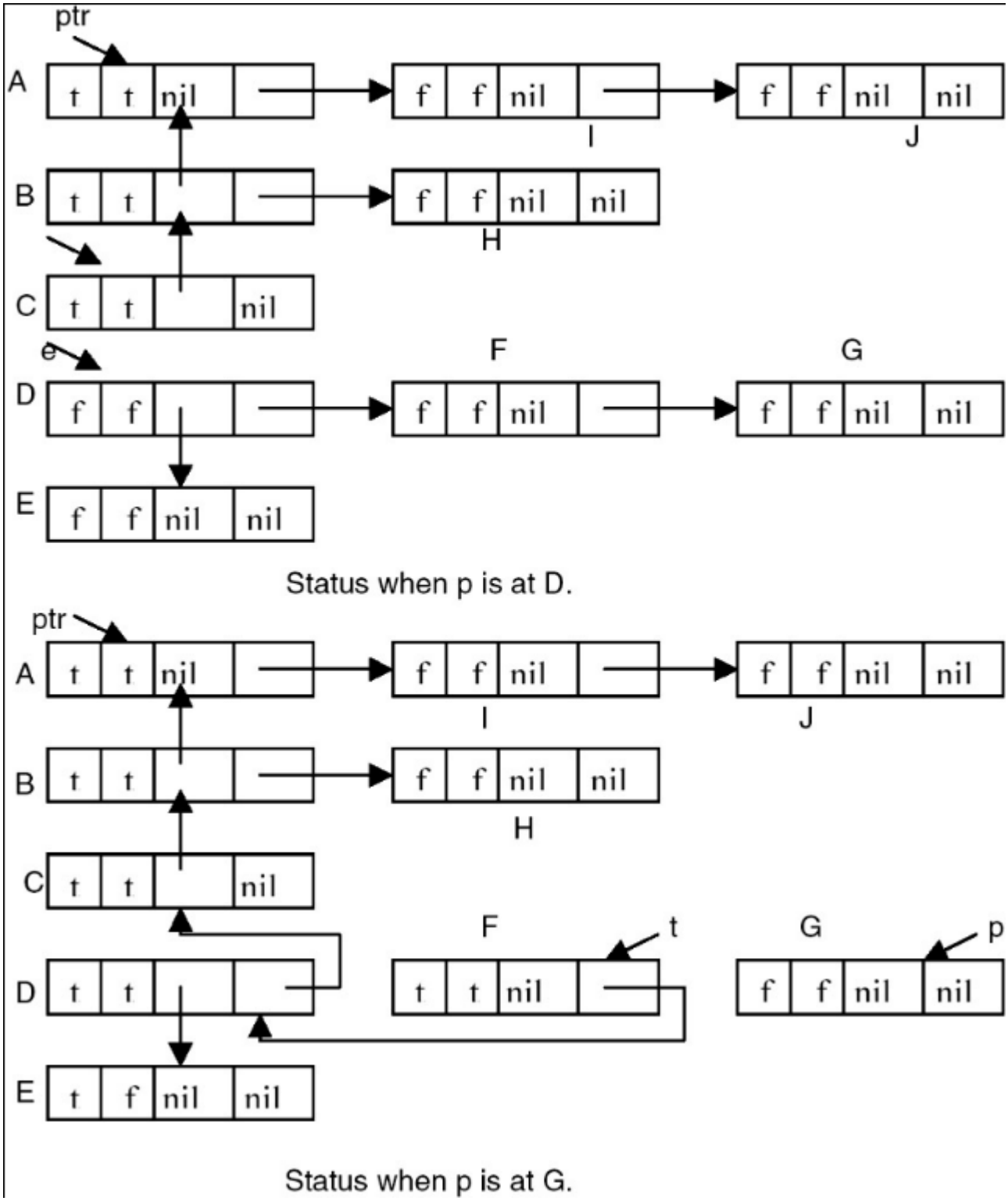

At the end of the algorithm, all the nodes are marked and all tag fields are restored to `FALSE`. Thus the list looks like this.

ABC Amber CHM Converter Trial version, http://www.processtext.com/abcchm.html

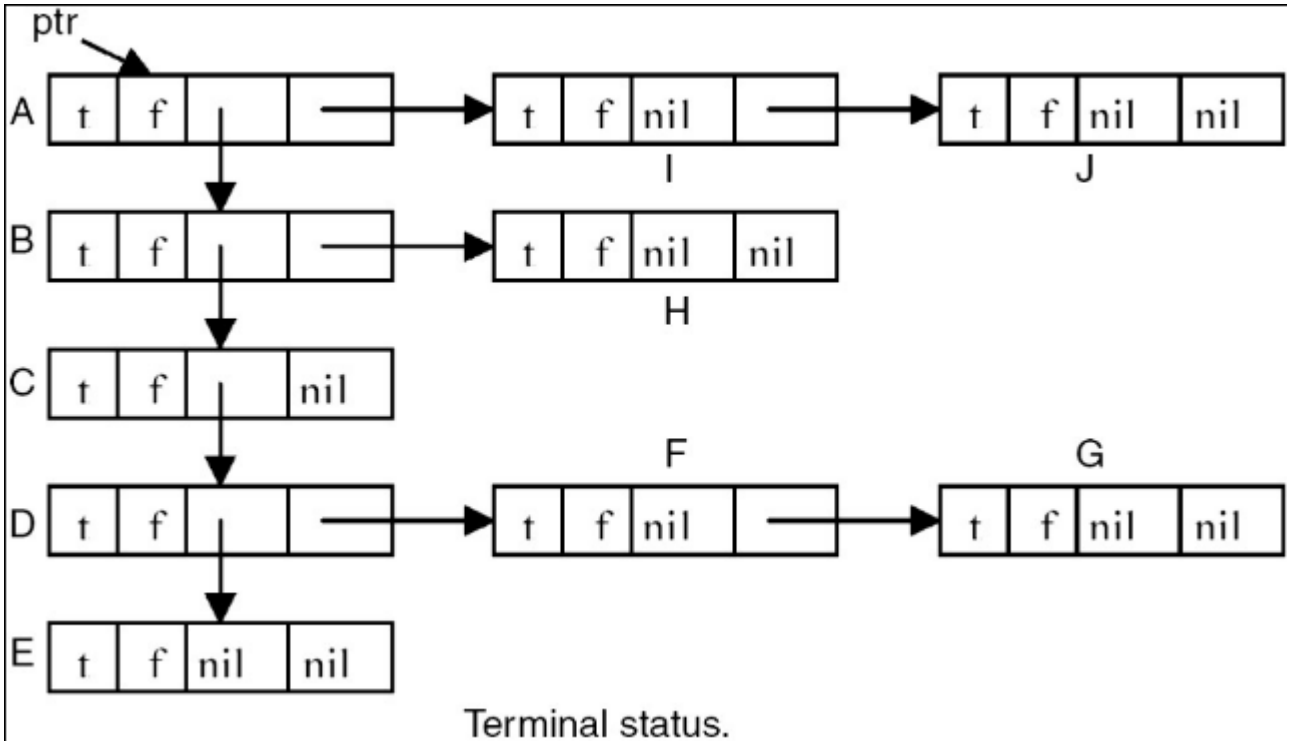

Points to Remember

1. We require an extra `tag` field if the marking is to be done without using an extra amount of memory.
2. The computing time of `markList()` is O(*m*) where *m* is the number of newly marked nodes.
3. By properly maintaining the predicate for `t-ptr` list, the code can be easily understood.
4. It is said that `gotos` should be avoided as much as possible. However, judicious use of `gotos` at proper places can make an otherwise tiring code easier to understand.

Previous Next

ABC Amber CHM Converter Trial version, http://www.processtext.com/abcchm.html

PROBLEM: COMPUTE N EQUIVALENCE CLASSES

Write a program to produce N equivalent classes as linked lists from a linked list of integers, applying the `mod` function.

Program

```
#include <stdio.h>
typedef struct node node;
struct node {
   int val;
   node *next;
};

node *getList(int a[], int n) {
   /*
    * form a list of n integers in a[].
    */
   int i;
   node *list = NULL;

   for( i=0; i<n; ++i ) {
      node *ptr = (node *)malloc( sizeof(node) );
      ptr->val = a[i];
      ptr->next = list;
      list         = ptr;
   }
   return list;
}

node **applyMod(node *list, int n) {
   /*
    * apply (mod n) on every element of list and store that element in
    * the list modlists[(mod n)].
    * thus we form array[n] of lists.
    * each list is one equivalence class.
    */
   node **modlists;
   node *ptr, *next;

   modlists = (node **)calloc( n, sizeof(node *) );
   for(ptr=list, next=(ptr?ptr->next:NULL); ptr; ptr=next,
next=(next?next->next:NULL))
      ptr->next = modlists[ptr->val%n], modlists[ptr->val%n] = ptr;
```

ABC Amber CHM Converter Trial version, http://www.processtext.com/abcchm.html

```
   return modlists;
}

void printModlists(node **modlists, int n) {
   /*
    * prints the equivalence classes.
    */
   node *ptr;
   int i;

   for(i=0; i<n; ++i) {
      printf("%d: ", i);
      for(ptr=modlists[i]; ptr; ptr=ptr->next)
             printf("%d ", ptr->val);
      printf("\n");
   }
   printf("\n");
}

main() {
   int a[] = {10,2,3,44,432,35,6576,34,12,5456,23423,234,23};
   node *list = getList(a, sizeof(a)/sizeof(int));
   node **modlists;
   int n;

   printf( "Enter number of equivalence classes: " );
   scanf( "%d", &n );
   modlists = applyMod(list, n);
   printModlists(modlists, n);

   return 0;
}
```

Explanation

1. A relation that is symmetric, reflexive, and transitive is termed an *equivalence relation*. Each equivalence relation divides its elements into partitions called *equivalence classes*.
   - A relation R is symmetric if aRb => bRa for all a, b in R and a!=b.
   - A relation R is reflexive if aRa for all a in R.
   - A relation R is transitive if aRb and bRc => aRc for all a, b, c in R.
2. `mod()`, (the modulus function) is an equivalence relation. It partitions its set of elements into N equivalence classes where N is the number used for division.
3. The program creates a linked list of integers (`getList()`). It then asks for the value of `N` for applying the `mod()` function. The function `applyMod()` takes a list of integers and the value of `N` as arguments and applies `mod(N)` over each element e of the list to get a value v as the remainder. The element e is then put in `modlists[v]`, where `modlists[N]` is an array of list of integers. Each list `modlists[i]` represents one partition. Each list is finally printed.
4. The complexity of `applyMod()` is O(*m*) where *m* is the number of elements in the original list. For each element, `mod()` is applied, which is assumed to be an O(1) operation, and the insertion

of the element in the list is O(1). So `applyMod()` has linear complexity.

Points to Remember

1. A relation which is symmetric, reflexive, and transitive is called an equivalence relation.
2. An equivalence relation partitions its elements into disjointed sets.
3. `mod()` is an equivalence relation.
4. We save space in `applyMod()` by reusing the nodes from the original list into the array of lists.

Previous Next

ABC Amber CHM Converter Trial version, http://www.processtext.com/abcchm.html

Chapter 26: Problems in Strings

PROBLEM: MAXIMIZE A COMBINATION UNDER CONSTRAINTS

Given n arbitrary strings S1, S2,…,Sn, maximize the function

f(Si, Si+1, …, Sj) = length(Si) + length(Si+1)+ … + length(Sj)

under the given constraints c(Sp,…,Sq), which means strings Sp,…,Sq cannot be taken together.

Program

```
#include <stdio.h>

#define NANSWERS 3    // max no of strings in the answer.
#define MAXCONS 5     // max length of any constraint.

typedef enum {FALSE, TRUE} bool;

bool isAbsent(int strnum, int *answer, int nans) {
    /*
     * returns TRUE if answer[nans] does NOT contain strnum.
     */
   int i;

   for(i=0; i<nans; ++i)
      if(answer[i] == strnum)
             return FALSE;
   return TRUE;
}

bool satisfies(int *answer, int nans, int constraints[][MAXCONS+1], int ncons)
   {
   /*
    * returns TRUE if nans answers in answer satisfy ncons constraints.
    * note that each constraint ends with –1.
    */
   int i, j;

   for(i=0; i<ncons; ++i) {
      for(j=0; constraints[i][j] != –1; ++j)
             if(isAbsent(constraints[i][j], answer, nans))
                    break;
      if(constraints[i][j] == –1)
```

ABC Amber CHM Converter Trial version, http://www.processtext.com/abcchm.html

```
                return FALSE;
    }
    return TRUE;
}
void findMaxComb(int *lengths, int nstr, int constraints[][MAXCONS+1], int
ncons, int *answer, int nans, int *maxsum, int startstr, int startans, int
currsum ) {
    /*
     * find the max sum of lengths of nans strings out of nstr strings of
     * lengths lengths[] satisfying ncons constraints constraints[].
     * save the max sum in *maxsum and the string indices in answer[].
     */
    int i;

    if(startans < nans) {
       for(i=startstr; i<nstr; ++i) {
                answer[startans] = i;
                findMaxComb(lengths, nstr, constraints, ncons, answer, nans,
maxsum, i+1, startans+1, currsum+lengths[i]);
       }
    }
    else if(currsum > *maxsum) {
       if(satisfies(answer, nans, constraints, ncons))
              *maxsum = currsum;
    }
}
    int main() {
        int lengths[] = {9, 8, 6, 5, 4, 3}; // lengths[i] = length(string[i]).
        int answer[NANSWERS];            // indices of strings.
        int constraints[][MAXCONS+1] = {        // index of string starts with
1 so that
                                {1,3,-1},              // end of constraint
can be signified
                                {2,-1},         // by 0.
                                {1,5,-1},              // we decrement every
index so that
                                {3,4,-1},              // each constraint ends
with -1.
                                {0,4,5,-1},
                                {0,4,-1},
                                {0,3,5,-1}

                            };
        int ncons = sizeof(constraints)/sizeof(int)/(MAXCONS+1); // no of
constraints.
```

```
        int nstr = sizeof(lengths)/sizeof(int);          // no of strings.
        int i, j;
        int maxsum = 0;

        for(i=1; i<=NANSWERS; ++i) {
            findMaxComb(lengths, nstr, constraints, ncons, answer, i, &maxsum,
0, 0, 0);
            printf("After %d strings: maxsum=%d.\n", i, maxsum);
            //maxsum = 0; // this will keep all length combinations separate.
       }

       return 0;
}
```

Explanation

1. We represent the given strings' lengths in an integer array. Each constraint consists of an array of indices of strings that cannot appear together in the final answer. Since each constraint can contain different number of indices, we end each constraint by –1. If the final answer we require consists of at most `NANSWERS` strings, we find the combination of i strings, the sum of whose lengths will be maximum, where `1<=i<=NANSWERS`. The function `findMaxComb()` finds such a combination for given value of i, if it exists. The variable `maxsum` signifies the current maximum sum of the combination of strings found so far. In order to find such a combination for every length, one needs to set `maxsum=0` in the loop in `main()`. Also, if one wants to find a combination consisting of only `NANSWERS` strings, then the loop in `main()` can be changed as `for(i=NANSWERS; i<=NANSWERS; ++i)`. In our implementation, the loop traverses from 1 to `NANSWERS` and `maxsum` is not set to 0 inside the loop. Thus we find a combination with any number of strings, up to `NANSWERS`.
2. The function `findMaxSum()` recursively finds a combination of maximum length and successively fills the `answer[]` array, which contains the final answer. The variable `currsum` contains the sum of the current strings selected in `answer[]`. The number of entries in `answer[]` to be filled is sent as a parameter from `main()` in the variable `nans`. If the `nans` fields in the array `answer[]` are filled, we check whether the current sum is greater than the current maximum sum found. If it is, then we check whether the new combination satisfies all constraints. If it satisfies all constraints, we have found a new combination that becomes the current maximum. So `maxsum` is updated.
3. Whether a string combination satisfies all constraints is checked in the function `satisfies()`. If there exists a constraint, all of whose string indices are present in the `answer[]` array of string indices, then that means the string combination does not satisfy that constraint, because each constraint c(Sp,…,Sq) says that the strings Sp…Sq cannot be combined. Thus, if we find that the string combination in `answer[]` satisfies all the constraints, then the function `satisifes()` returns `TRUE`, otherwise, it returns `FALSE`.
4. **Example:** Let the strings have lengths 9, 8, 6, 5, 4, and 3. The string indices are from 0 to 5. Let the constraints be { {1,3}, {2}, {1,5}, {3,4}, {0,4,5}, {0,4}, and {0,3,5} }, which means strings 1 and 3 cannot be included together, string 2 cannot be taken, strings 1 and 5 cannot appear together, strings 0, 4, and 5 cannot appear together, strings 0 and 4 cannot appear together, and strings 0, 3, and 5 cannot appear together. Note that the constraint {0,4,5} is included in the constraint {0,4}. Let `NANSWERS` = 3. The different steps of the algorithm are presented in the following table.

I	string combination	currsum	maxsum	currsum > maxsum	satisfies-all-constraints?	maxsum
1	0	9	0	yes	yes	9
	1 to 5	<9	9	no	—	9

ABC Amber CHM Converter Trial version, http://www.processtext.com/abcchm.html

I	string combination	currsum	maxsum	currsum > maxsum	satisfies-all-constraints?	maxsum
2	0, 1	17	9	yes	yes	17
other combinations		<17	17	no	—	17
3	0, 1, 2	23	17	yes	no	17
	0, 1, 3	22	17	yes	no	17
	0, 1, 4	21	17	yes	no	17
	0, 1, 5	20	17	yes	no	17
	0, 2, 3	20	17	yes	no	17
	0, 2, 4	19	17	yes	no	17
	0, 2, 5	18	17	yes	no	17
	0, 3, 4	18	17	yes	no	17
	0, 3, 5	17	17	no	—	17
	0, 4, 5	16	17	no	—	17
	1, 2, 3	19	17	yes	no	17
	1, 2, 4	18	17	yes	no	17
	1, 2, 5	17	17	no	—	17
	2, 3, 4	15	17	no	—	17
other combinations		<17	17	no	—	17

Points to Remember

1. The complexity of the algorithm is exponential over the number of strings.
2. Some speed-up can be achieved by sorting the lengths array first, which will result in avoiding some combinations. In that case A* algorithm can be used to find the answer.
3. If each constraint consists of a fixed number of strings, then this problem can be solved in polynomial time by reducing this problem to the longest path problem.

Previous Next

ABC Amber CHM Converter Trial version, http://www.processtext.com/abcchm.html

PROBLEM: MAXIMIZE A COMBINATION OF STRINGS—THE SECOND METHOD

Given n arbitrary strings S1, S2, …, Sn, maximize the function

f(Si, Si+1, …, Sj) = length(Si) + length(Si+1)+ … + length(Sj)

under the given constraints c(Si, Sj) which means Si and Sj cannot be taken together.

Program

```
#include <stdio.h>
#define MININT -1000
#define MAXVERTICES 10
#define MAXPATHVERT 3

void printCosts( int a[][MAXVERTICES], int nvert, int pathvert[][MAXVERTICES]
) {
   /*
    * prints min cost matrix a.
    */
   int i, j;

   for( i=0; i<nvert; ++i ) {
      for( j=0; j<nvert; ++j )
              if( a[i][j] <= MININT )
                     printf( "%4c(%d) ", 'M', pathvert[i][j] );
              else
                     printf( "%4d(%d) ", a[i][j], pathvert[i][j] );
      printf( "\n" );
   }
   printf( "\n" );
}

int getMaxSum(int a[][MAXVERTICES], int b[][MAXVERTICES][MAXVERTICES], int i,
int j, int k, int *h1, int *h2) {
   /*
    * find such h1 and h2 that b[h1][i][k]+b[h2][k][j] is max and > a[i][j];
    * and h1+h2–1 < MAXPATHVERT;
    * return the sum.
    */
   int p, q;
   int maxsum = 0;
   *h1 = *h2 = –1;
```

ABC Amber CHM Converter Trial version, http://www.processtext.com/abcchm.html

```
   for(p=2; p<MAXPATHVERT; ++p) // 0 and 1 NOT necessary.
       for(q=p; q<=MAXPATHVERT; ++q) {
              if(p+q-1 <= MAXPATHVERT && b[p][i][k]>0 && b[q][k][j]>0 &&
b[p][i][k]+b[q][k][j] > maxsum)
                     maxsum=b[p][i][k]+b[q][k][j], *h1=p, *h2=q;
       }
   if(maxsum > a[i][j])
      return maxsum;
   *h1 = *h2 = -1;
   return -1;
}

void allCosts(int cost[][MAXVERTICES], int a[][MAXVERTICES], int nvert){

   int i, j, k;
   int pathvert[MAXVERTICES][MAXVERTICES] ;
   int b[MAXPATHVERT+1][MAXVERTICES][MAXVERTICES] ;
   int sum, h1, h2;
   int l;
   for( i=0; i<nvert; ++i )
       for( j=0; j<nvert; ++j )
              a[i][j] = cost[i][j], pathvert[i][j] = 2, b[2][i][j] =
cost[i][j];
   printCosts(a, nvert, pathvert);

   for(l=2; l<=MAXPATHVERT; ++l)
      for(k=0; k<nvert; ++k) {
         for(i=0; i<nvert; ++i)
                for(j=0; j<nvert; ++j) {
                       sum = getMaxSum(a, b, i, j, k, &h1, &h2);
                       if(sum != -1 && h1 != -1 && a[i][j]>=0) {
                              //printf("a[i][j]=%d, h1=%d, h2=%d.\n", sum,
h1, h2);
                              a[i][j] = sum, b[h1+h2-1][i][j] = sum,
pathvert[i][j]=h1+h2-1;
                       }
                    }
             printCosts(a, nvert, pathvert);
            }
}

int main() {
    int cost[MAXVERTICES][MAXVERTICES] =
                                                { {0,50,10,MININT,45,MININT},
```

ABC Amber CHM Converter Trial version, http://www.processtext.com/abcchm.html

```
{MININT,0,15,MININT,10,MININT},

{20,MININT,0,15,MININT,MININT},

{MININT,20,MININT,0,35,MININT},

{MININT,MININT,MININT,30,0,MININT},

{MININT,MININT,MININT,3,MININT,0} };
                                                    /* {20,30,40,50},
                                                     {MININT,40,50,60},
{MININT,MININT,60,70},

{MININT,MININT,MININT,80} ,
                                                     {2,3,4,5},
                                                     {3,4,5,6},
                                                     {4,5,6,MININT},
                                                     {5,6,MININT,8} ,

                                                     {0,1,2,MININT},
                                                     {3,0,MININT,4},
{MININT,MININT,0,6},

                                                     {MININT,5,MININT,0}

                                                  };   */
     int a[MAXVERTICES][MAXVERTICES] ;
     int nvert = 6;           // no of vertices.

     /*print( cost, nvert ); */
     allCosts( cost, a, nvert );
     //printCosts( a, nvert );
     return 0;
}
```

Explanation

1. Consider a graph represented by a cost adjacency matrix `cost[n][n]`, where n is the number of vertices in the graph `cost[i][i] == 0`. `cost[i][j]` represents the length of the edge from vertex `i` to vertex `j`.
2. We used this cost adjacency matrix to solve the problem of finding the shortest path between any pair of vertices in the graph in O(*n*^3). We set `cost[i][j]` = infinity whenever there is no edge from vertex `i` to vertex `j`.

We define a similar problem of finding the longest path between any pair of vertices in the graph, called the longest path problem. If we allow inclusion of a vertex more than once, there is a possibility of getting into an infinite loop and the procedure may not terminate! So we put a limit on the number of

ABC Amber CHM Converter Trial version, http://www.processtext.com/abcchm.html

vertices that can be included in the longest path.

3. We reduce the given problem to the longest path problem. Each string Si is mapped to a vertex Vi. In the cost adjacency matrix, an entry `cost[i][j]` contains length(Si)+length(Sj). Thus the matrix is symmetric. Also, `cost[i][i]` is no longer zero. It contains the value length(Si)+length(Si). After this, we put in the constraints given by c(Si, Sj) and we mark such entries `cost[i][j]` as -infinity (MININT). Thus we get the cost adjacency matrix to represent the given constraints.
4. The function `allCosts()` finds the cost of the longest path between any pair of vertices. It contains a matrix `a[][]`,which contains the current maximum path between any pair of vertices at any given time. It is initialized with `cost[][]`. In the loop, we find longest paths of lengths 2, 3, … up to the limit defined by `MAXPATHVERT`. It starts with length == 2 because `cost[][]` contains the path containing 2 vertices, that is, an edge. Thus the original three loops of the shortest path problem are enclosed in another loop that goes from 2 to `MAXPATHVERT`. We also maintain a 3-dimensional array `b[][][]`. An entry `b[h][i][j]` contains the length of the longest path from vertex `i` to vertex `j` of length `h`. We also maintain a matrix `pathvert[][]` in which `pathvert[i][j]` contains the length of the longest path from `i` to `j`. Inside the innermost loop, the function `getMaxSum()` is called. In this function, for `a[i][j]`, all combinations of paths from vertex `i` to vertex `k` and from vertex `k` to vertex `j` are checked and the one with the maximum cost is returned. `a[i][j]`, then contains this new value if it is greater than the earlier one. The program finally calculates the cost of the longest path between any pair of vertices in the graph.
5. Let `m=MAXPATHVERT`. Then the complexity of `getMaxSum()` is O(*m*^2). The complexity of `allCosts()` is then O(*m*^3*n*^3) where *n* is the number of strings in the given problem. The complexity of `getMaxSum()` may be reduced to O(*m* log*m*) using a procedure similar to merge sort.

Points to Remember

1. Reducing one problem to another known problem can help in reusing the code from the earlier problem, as well as in the complexity analysis.
2. The complexity of the problem stated is O(*m*^3*n*^3), where *n* is the number of strings and *m* is the number of maximum strings allowed.
3. If we allow the constraint function `c()` to contain an arbitrary number of strings, then the complexity becomes exponential O(*n*^*n*).

Previous Next

ABC Amber CHM Converter Trial version, http://www.processtext.com/abcchm.html

PROBLEM: CLOSURE OF SETS

Write a program to find closure of a set of characters input as a string.

Program

```
#include <stdio.h>

#define MAXLEN 80

void init(char *answer, int slen) {
    /*
     * initialize first slen entries in answer[] to 0.
     */
    int i;

    for(i=0; i<slen; ++i)
        *answer++ = 0;
    *answer = 0; // eos.
}

void printComb(char *s, int slen, char *answer) {
    /*
     * fixes a character of s and then calls printComb() recursively
     * to get all combinations of the remaining chars.
     */
    int i;
    static int count = 0;

    if(*s == 0) {
        count++;
        printf("%2d: %s.\n", count, answer);
        return;
    }
    for(i=0; i<slen; ++i)
        if(answer[i] == 0) {
            answer[i] = *s;
            printComb(s+1, slen, answer);
            answer[i] = 0;
        }
}

void fillBitwise(int i, char *str, char *s, int slen) {
    /*
```

ABC Amber CHM Converter Trial version, http://www.processtext.com/abcchm.html

```
     * the pattern in i is the characteristic function of each char in s.
     * whenever this bit is 1, fill str.
     */
    int j;

    for(j=0; j<slen; ++j)
        if((i & (1<<j)) != 0)
            *str++ = s[j];
    *str = 0;
}

void findClosure(char *s, int slen) {
    /*
     * finds closure of chars in s.
     * closure includes all substrings of sizes <= slen.
     * this function also prints their combinations using the
     * function printComb().
     */
    int i;
    char answer[MAXLEN];
    char str[MAXLEN];
    for(i=(1<<slen)-1; i>=0; -i) {
         // i represents the bit pattern.
         // 1 in the bit pattern means char should be displayed.
         fillBitwise(i, str, s, slen);
         init(answer, strlen(str));
         printf("printComb(%s).\n", str);
         printComb(str, strlen(str), answer);
         getchar();
    }
}

int main() {
    char s[MAXLEN];

    printf("Enter characters for closure: ");
    gets(s);

    while(*s) {
        //init(answer, strlen(s));
        //printComb(s, strlen(s), answer);
        findClosure(s, strlen(s));
        printf("Enter characters for closure(press enter to end): ");
        gets(s);
```

ABC Amber CHM Converter Trial version, http://www.processtext.com/abcchm.html

```
    }
    return 0;
}
```

Explanation

1. Closure of string 'abc' is a set of strings that are combinations of all 3- character strings plus combinations of all 2-character strings plus combinations of all 1-character strings plus combinations of all strings of length zero.

Thus, closure(abc) = comb(abc)	/* strings of length 3. */
+ comb(ab) + comb(bc) + comb(ac)	/* strings of length 2. */
+ comb(a) + comb(b) + comb(c)	/* strings of length 1. */
+ comb('')	/* empty string. */

2. Note that the number of times `comb()` gets called is 2^*n* where *n* is the length of the input string. We can visualize this using bits. For a 3-character string, invocation of `comb()` with different input parameters can be represented by 3-bit strings as follows:

abc	ó	111
ab	ó	110
ac	ó	101
a	ó	100
bc	ó	011
b	ó	010
c	ó	001
''	ó	000

3. Thus, we generate bit patterns as shown to represent different strings and then call `comb()` with these input parameters. Note further that these bit patterns are nothing but numbers 0 to 2^*n*–1.
4. The function `findClosure()` contains a loop which goes from 2^*n*–1 to 0 generating 2^*n* bit patterns representing 2^*n* strings, as just shown. According to these bit patterns, the function `fillBitwise()` builds the input string. This input string is then given to function `printComb()`, which finds all combinations of the input string.
5. The complexity of `printComb()` is O(n!) and it is called 2^n times in the loop. So the complexity of `findClosure()` is O(*n*!2^*n*).

Points to Remember

1. We use bitwise operators to check whether a bit is on (1) or off (0). This speeds the processing.
2. Note carefully the mapping between the bit pattern of an integer and the character string, and how this mapping helped us build the algorithm.
3. Note the reuse of the procedure `printComb()`.
4. The complexity of `findClosure()` is O(*n*!2^*n*).

Previous Next

ABC Amber CHM Converter Trial version, http://www.processtext.com/abcchm.html

PROBLEM: DISTANCE BETWEEN TWO STRINGS

Write a program to find the edit distance between two character strings.

Program

```
#include <stdio.h>

#define MAXLEN 80

int findMin(int d1, int d2, int d3) {
   /*
    * return min of d1, d2 and d3.
    */
   if(d1 < d2 && d1 < d3)
       return d1;
   else if(d1 < d3)
       return d2;
   else if(d2 < d3)
       return d2;
   else
      return d3;
}

int findEditDistance(char *s1, char *s2) {
    /*
     * returns edit distance between s1 and s2.
     */
   int d1, d2, d3;

   if(*s1 == 0)
       return strlen(s2);
   if(*s2 == 0)
       return strlen(s1);
   if(*s1 == *s2)
       d1 = findEditDistance(s1+1, s2+1);
   else
       d1 = 1 + findEditDistance(s1+1, s2+1);    // update.
   d2 = 1+findEditDistance(s1, s2+1);                  // insert.
   d3 = 1+findEditDistance(s1+1, s2);                  // delete.

   return findMin(d1, d2, d3);
}
```

```
int main() {
    char s1[MAXLEN], s2[MAXLEN];

    printf("Enter string 1: ");
    gets(s1);

    while(*s1) {
        printf("Enter string 2: ");
        gets(s2);
        printf("Edit distance(%s, %s) = %d.\n", s1, s2, findEditDistance(s1,
s2));
        printf("Enter string 1(enter to end): ");
        gets(s1);
    }

    return 0;
}
```

Explanation

1. The edit distance between two strings is the minimum number of characters in one string to be updated, inserted, or deleted to get the second string.
   Example: The edit distance between 'abc' and 'abd' is 1, as one character in 'abc' needs to be updated to get 'abd'.
   The edit distance between 'abc' and 'bd' is 2, as one character 'a' in 'abc' needs to be deleted and one character 'c' should be updated to 'd' to get 'bd'. The edit distance between 'abc' and ' abc' is 0.
2. We solve this problem elegantly using recursion. The function `findEditDistance(s1, s2)` checks whether any of its input strings, s1 and s2, are empty. If so, then it returns the length of the other string as the edit distance. If not, it checks whether the first characters of the two strings match. If they do, then a count d1 is obtained by calling `findEditDistance()` recursively with inputs s1+1 and s2+1. If the first two characters of s1 and s2 do not match, then it is assumed to be one updation and the count d1 is obtained by adding one (for updation) to the edit distance between strings s1+1 and s2+1. The function then calls itself recursively again to get a count d2 by adding one to the edit distance between strings s1 and s2+1, to account for the deletion of one character from s1 to get s2. A symmetrical thing is done for s2 to get the count d3. After finding d1, d2, and d3, the minimum of the three counts is the edit distance between s1 and s2. The function `findMin()` does this job.
3. Since for each character in s1, the function calls itself recursively 3 times, the complexity can be calculated using the following recurrence relation:

   $T(n) = 3*T(n-1)$

   where n is the minimum of the two lengths of the strings. Solving this recurrence relation gives us the complexity $O(3^n)$.

Points to Remember

1. Edit distance between two strings is the minimum number of insertions, deletions, or updations required in one string to get the other string.
2. Messages over a noisy channel can be compared with some approximation using the edit distance technique. This technique is also useful in voice and image recognition.
3. The complexity of `findEditDistance()` is $O(3^n)$ where *n* is the minimum of the lengths of the two strings. The factor of 3 comes into the picture because for approximately each character, the function calls itself 3 times. To see how enormously this exponential complexity grows, try inputs to this program in increasing order of lengths.

ABC Amber CHM Converter Trial version, http://www.processtext.com/abcchm.html

ABC Amber CHM Converter Trial version, http://www.processtext.com/abcchm.html

PROBLEM: FINDING THE MAXIMUM MATCHING PATTERN IN THE STRING

Find the maximum matching pattern in an input string. Note that the matching pattern may be separated by some other patterns.

Program

```
#include <stdio.h>
#define MAXLEN 80
void findMaxPat(char *s, char *pat, int *maxpat) {
    int i;

    for(i=0; *s && *pat; ++s, ++i)
        if(*s == *pat)
            *maxpat++=i, pat++;
    if(!*pat)
        printf("whole pat found.\n");
    else
        printf("whole pat NOT found.\n");
    *maxpat = –1; // end of maxpat.
}

void printMaxPat(char *s, int *maxpat) {
    char *sptr = s;

    puts(s);
    for(; *sptr && *maxpat != –1; ++sptr) {
        if(sptr-s == *maxpat) {
            printf("^");
            maxpat++;
        }
        else
           printf("%c", ' ');
    }
    printf("\n");
}

int main() {
    char s[MAXLEN];
    char pat[MAXLEN];
    int maxpat[MAXLEN];

    printf("Enter main string: ");
```

ABC Amber CHM Converter Trial version, http://www.processtext.com/abcchm.html

```
    gets(s);
    while(*s) {
        printf("Enter pattern to be searched: ");
        gets(pat);
        findMaxPat(s, pat, maxpat);
        printMaxPat(s, maxpat);
        printf("Enter main string: ");
        gets(s);
    }
    return 0;
}
```

Explanation

1. This program finds the maximum match of a pattern in a string. The characters matching the pattern in the string may be separated by other characters which are of no interest to us. Thus the job of this program is like a noise disposal parser that parses a valid syntactic entity separated by noise. We restrict ourselves to one string and one pattern.
2. **Example:** Let the input string be 'hello world' and the matching pattern be 'lord'. Then the program searches for each character in the pattern in the input string and marks each matching character as follows:
3.
4. `h e l l o w o r l d`
5. `^  ^  ^ ^.`
6. `main()` iterates and asks for the input string and pattern until the input string is empty. It then calls `findMaxPat()` to find indices of characters in the input string that match characters in the input pattern. This array of indices is then passed to `printMaxPat()`, which marks the indexed characters.
7. The complexity of `findMaxPat()` is O(*n*) where *n* is the length of the input string.

Points to Remember

1. Noise disposal parsing is useful in parsing languages such as English. It is also useful in filtering of data (signal).
2. The procedure `findMaxPat()` can be useful in approximate pattern- matching algorithms.
3. The complexity of `findMaxPat()` is O(*n*) where *n* is the length of the input string.

Previous Next

ABC Amber CHM Converter Trial version, http://www.processtext.com/abcchm.html

PROBLEM: IMPLEMENTATION OF THE SOUNDEX FUNCTION

Write a function to compare two strings using the soundex method.

Program

```
#include <stdio.h>

#define MAXLEN 80
#define NALPHA 26

char *soundexGroups[] = {
                "aeiouhyw",
                             "kcgjqsxz",
                             "td",
                             "bpfv",
                             "l",
                             "mn",
                             "r"
                        };
int soundexCodes[NALPHA];

void soundexInit() {
    /*
     * build an inverted index from the global table soundexGroups[].
     * the inverted index is stored in global soundexCodes[].
     */
    int i;
    char *sptr;

    for(i=sizeof(soundexGroups)/sizeof(char *)-1; i>=0; -i)
        for(sptr=soundexGroups[i]; *sptr; ++sptr)
            soundexCodes[*sptr-'a'] = i;
}

int compareCodes(int *soundex1, int *soundex2) {
    int *ptr1, *ptr2;

    for(ptr1=soundex1, ptr2=soundex2; *ptr1!=-1 && *ptr2!=-1 && *ptr1==*ptr2;
++
ptr1, ++ptr2)
            ;
    return *ptr1 == *ptr2;
}
```

ABC Amber CHM Converter Trial version, http://www.processtext.com/abcchm.html

```
void findSoundex(char *s, int *soundex, char lastchar) {
    /*
     * find the soundex code for s and save in soundex.
     * the stored value is the index in the array of soundex codes.
     * function is recursive.
     * start by changing multiple occurrences of chars in consecutive
positions
     * by single occurrences.
     * end soundex by –1.
     * lastchar == –1 implies this is the first call to this function.
     */
    if(!*s)
        *soundex = –1, lastchar = 0;
    else if(*s == lastchar)
        findSoundex(s+1, soundex, lastchar);
    else if(lastchar == –1) // *s is the first char.
        *soundex=soundexCodes[*s-'a'], findSoundex(s+1, soundex+1, *s);
    else if(soundexCodes[*s-'a'] == 0) // vowel group.
        findSoundex(s+1, soundex, *s);
    else
        *soundex=soundexCodes[*s-'a'], findSoundex(s+1, soundex+1, *s);
}

int compareSoundex(char *s1, char *s2) {
    /*
     * find soundex codes for s1 and s2.
     * return 1 if codes are equal else 0.
     */
   int soundex1[MAXLEN], soundex2[MAXLEN];

   findSoundex(s1, soundex1, –1);
   findSoundex(s2, soundex2, –1);

   return compareCodes(soundex1, soundex2);
}

int main() {
    char s1[MAXLEN];
    char s2[MAXLEN];
    soundexInit();

    printf("Enter string 1: ");
    gets(s1);
```

ABC Amber CHM Converter Trial version, http://www.processtext.com/abcchm.html

```
    while(*s1) {
        printf("Enter string 2: ");
        gets(s2);
        printf("(%s == %s) = %d.\n", s1, s2, compareSoundex(s1, s2));
        printf("Enter string 1(enter to end): ");
        gets(s1);
    }
    return 0;
}
```

Explanation

1. Soundex is a technique in phonetics used to compare various phonetic elements. This technique is useful to compare voices. The soundex scheme can also help in correcting an incorrect phonetic element against its dictionary.
2. The soundex scheme groups similar-sounding characters in one group. When applied to the English alphabet, the groups are as follows.

Group Number	Characters
0	aeiouhwy
1	bpfv
2	cgjkqsxz
3	dt
4	l
5	mn
6	r

3. Thus, the soundex code for the word ‘cross’ is ‘26022’. By soundex, the words ‘think’ and ‘thing’ will be the same as they both have the same soundex code, ‘30052’. Note that they both sound similar.
4. The results become more interesting if we do the following:
   - The leading character is retained.
   - The consecutive duplicate characters are changed to a single character.
   - The vowels' group is dropped.

   Thus, the new soundex code for ‘cross’ is ‘262’ and the one for ‘alpha’ is ‘041’.
5. The function `soundexInit()` builds an inverted index `soundexCodes[]` from the soundex groups in `soundexGroups[]`. The function `compareSoundex(s1, s2)` compares strings s1 and s2 using the soundex scheme. It uses functions `findSoundex()` to find the soundex code for a string and `compareCodes()` to compare the two soundex codes found. A soundex code of a string is simply an array of integers, so the function `compareCodes()` is straightforward. The function `compareSoundex(s1, s2)` returns `TRUE` if s1 and s2 are equal by soundex, otherwise it returns `FALSE`.
6. The function `findSoundex()` finds the soundex code for its input string. The code is terminated by –1. The function is recursive and goes characterwise. The input variable `lastchar` is used to remove multiple consecutive occurrences of characters. If the soundex group is 0, it is not added to the code.

Points to Remember

1. The soundex scheme is used to compare phonetically equal strings. This is useful in voice recognition.
2. Building an inverted index such as `soundCodes[]` proves to be more efficient than using

ABC Amber CHM Converter Trial version, http://www.processtext.com/abcchm.html

`soundexGroups[]` directly.

3. There are additional rules depending on language, dialect, and accents.

Previous Next

ABC Amber CHM Converter Trial version, http://www.processtext.com/abcchm.html

Chapter 27: Problems in Trees

PROBLEM: WRITE A NON-RECURSIVE VERSION OF PREORDER

Program

```
/**************** stack.c **********************/
#include <stdio.h>

#define SUCCESS 0
#define ERROR     -1

struct tnode;

typedef struct tnode *stype;
typedef struct snode snode;

struct snode {
    stype data;
    snode *next;
};

snode *stop = NULL; // signifies empty stack.

int sPush( stype data ) {
    /*
     * push data at stop.
     */
    snode *ptr = (snode *)malloc( sizeof(snode) );
    ptr->data = data;
    ptr->next = stop;
    stop = ptr;

    return SUCCESS;
}

   stype sPop() {
       /*
        * returns data at stop.
        */
       stype data;
       snode *ptr;
```

ABC Amber CHM Converter Trial version, http://www.processtext.com/abcchm.html

```
        if( sEmpty() ) {
            fprintf( stderr, "ERROR : popping from empty stack." );
            return (stype)NULL;
        }
        data = stop->data;
        ptr = stop;
        stop = stop->next;
        free(ptr);

        return data;
}

int sEmpty() {
    return ( stop == NULL );
}

/**************** queue.c **********************/
#include <stdio.h>

#define SUCCESS 0
#define ERROR    -1

struct tnode;

typedef struct tnode *qtype;
typedef struct qnode qnode;

struct qnode {
    qtype data;
    qnode *next;
};

qnode *front = NULL, // signifies empty queue.
     *rear = NULL;

int qInsert( qtype data ) {
    /*
     * inserts data at rear.
     */
    qnode *ptr = (qnode *)malloc( sizeof(qnode) );
    ptr->data = data;
    ptr->next = NULL;
    if( qEmpty() )
```

ABC Amber CHM Converter Trial version, http://www.processtext.com/abcchm.html

```
        front = ptr;
    else
       rear->next = ptr;
    rear = ptr;

    return SUCCESS;
}

qtype qRetrieve() {
   /*
    * retrieve data from front and remove it from queue.
    */
    qtype data:
    if( qEmpty() ) {
        fprintf( stderr, "ERROR : retrieving from empty queue." );
        return (qtype)NULL;
    }
    data = front->data;
    front = front->next;
    if( qEmpty() )          // last node removed.
        rear = NULL;
    return data;
}

int qEmpty() {
    return ( front == NULL );
}

/**************** main.c *********************/
#include <stdio.h>
#include <malloc.h>
#include "queue.c"
#include "stack1.c"
typedef int ttype;
typedef struct tnode tnode;

struct tnode {
   ttype data;
   tnode *left;
   tnode *right;
};

tnode *tree = NULL;
```

ABC Amber CHM Converter Trial version, http://www.processtext.com/abcchm.html

```
int tInsert( ttype data ) {
    /*
     * insert data into global tree.
     */
    tnode *ptr = (tnode *)malloc( sizeof(tnode) );
    ptr->data = data;
    ptr->left = NULL;
    ptr->right = NULL;
    tInsertPtr( &tree, ptr );
}

int tInsertPtr( tnode **tree, tnode *ptr ) {
    /*
     * inserts ptr into tree recursively.
     */
    if( *tree != NULL ) {
        if( ptr->data < (*tree)->data )
               tInsertPtr( &((*tree)->left), ptr );
        else
               tInsertPtr( &((*tree)->right), ptr );
    }
    else
       *tree = ptr;
    return SUCCESS;
}

void tPrint( tnode *tree ) {
    /*
     * prints tree in inorder recursively.
     */
    if( tree != NULL ) {
       printf( "going left of %d...\n", tree->data );
       tPrint( tree->left );
       printf( "%d ", tree->data );
       printf( "going right of %d...\n", tree->data );
       tPrint( tree->right );
       printf( "tree of %d is over.\n", tree->data );
    }
}

void tIterBFS( tnode *tree ) {
    /*
     * prints tree in breadth-first manner iteratively using a queue.
     */
```

ABC Amber CHM Converter Trial version, http://www.processtext.com/abcchm.html

```
    if( tree != NULL ) {
        qInsert( tree );

        while( !qEmpty() ) {
               tree = qRetrieve();
               printf( "[[ %d ]]\n", tree->data );
               if( tree->left != NULL )
                      qInsert( tree->left );
               if( tree->right != NULL )
                      qInsert( tree->right );
        }
    }
}

void tIterPreorder( tnode *tree ) {
    /*
     * prints tree in preorder iteratively using a stack.
     */
    if( tree != NULL ) {
        sPush( tree );

        while( !sEmpty() ) {
               tree = sPop();
               printf( "[[ %d ]]\n", tree->data );
               if( tree->right != NULL )
                      sPush( tree->right );
               if( tree->left != NULL )
                      sPush( tree->left );
        }
    }
}

int main() {
    tInsert(4);
    tInsert(2);
    tInsert(6);
    tInsert(1);
    tInsert(3);
    tInsert(5);
    tInsert(7);
    tPrint(tree);
    tIterPreorder(tree);
}
```

ABC Amber CHM Converter Trial version, http://www.processtext.com/abcchm.html

Explanation

1. In a preorder traversal, a node is processed first, followed by its left and right children nodes. This is easy with recursion. But while doing it iteratively, the right child node needs to be saved so that after the processing of the whole left subtree, the saved node can be taken for execution. This procedure needs to be followed for every node. Therefore, we need to use a stack.
2. We process the root node, push its right child (if it exists) in a stack, and take its left child (if it exists) for processing. This is done in a loop which results in the processing of all the nodes in the left subtree of the root node. We then pop the right child node and start processing it the same way. Thus we get a preorder traversal of the tree.
3. **Example:**

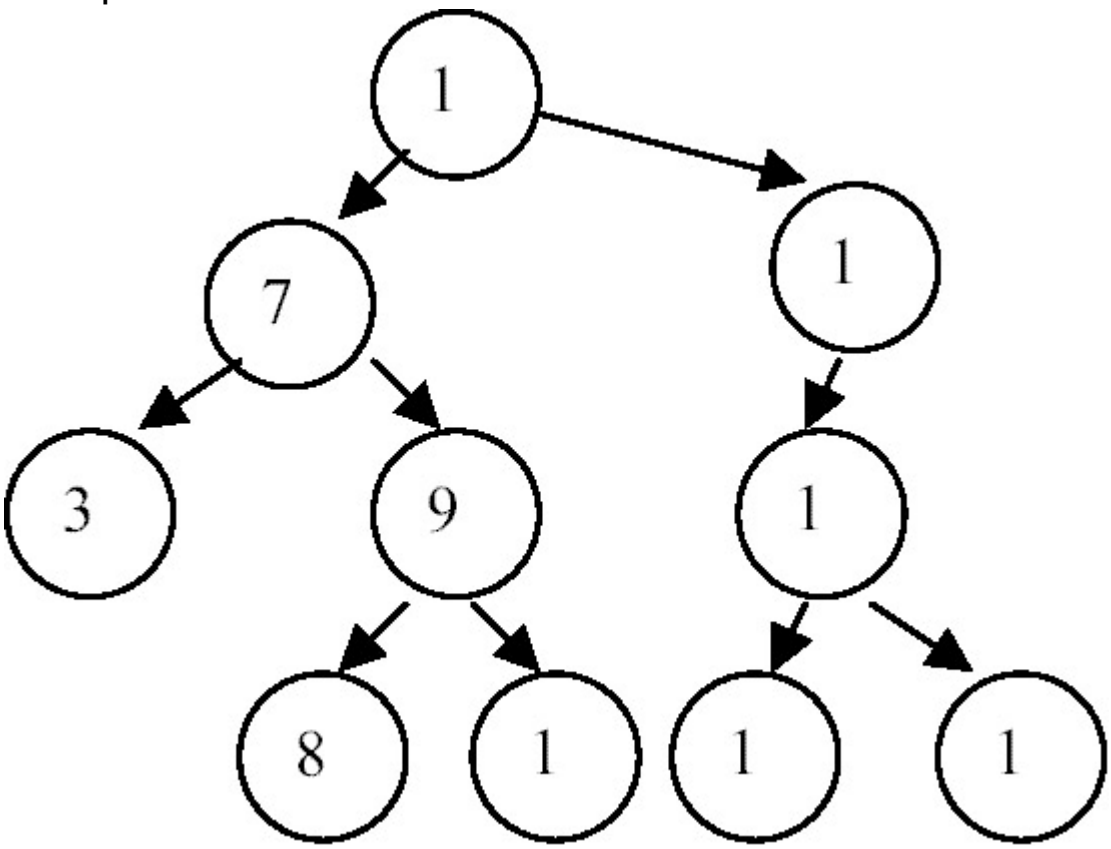

The preorder traversal is 12, 7, 3, 9, 8, 11, 18, 14, 13, 15.

The stepwise run of the algorithm is as follows.

step	node	stack	output
0	nil	empty	nil
1	12	18 7	12
2	7	18 9 3	12 7
3	3	18 9	12 7 3
4	9	18 11 8	12 7 3 9
5	8	18 11	12 7 3 9
6	11	18	12 7 3 9 8 11
7	18	14	12 7 3 9 8 11 18
8	14	15 13	12 7 3 9 8 11 18 14
9	13	15	12 7 3 9 8 11 18 14 13
10	15	empty	12 7 3 9 8 11 18 14 13

ABC Amber CHM Converter Trial version, http://www.processtext.com/abcchm.html

step	node	stack	output
			15

Points to Remember

1. The preorder traversal needs a stack.
2. Keeping stack processing and tree processing separate helps us make the program modular. This can help us in using the same implementation of stack/queue for some other application, by making changes in only the data type contained in the stack/queue.
3. In the preorder traversal, the right child should be pushed in the stack first, followed by the left child.
4. The recursive version is more readable than the iterative version. This is because the tree data structure itself is inherently recursive.

Previous Next

ABC Amber CHM Converter Trial version, http://www.processtext.com/abcchm.html

PROBLEM: WRITE A NON-RECURSIVE VERSION OF POSTORDER

Program

```
/******************** stack.c *********************/
#include <stdio.h>

#define SUCCESS 0
#define ERROR    -1

struct tnode;

typedef struct tnode *stype;
typedef struct snode snode;
typedef struct snode *stack;

struct snode {
    stype data;
    snode *next;
};

void sInit( stack *s ) {
   *s = NULL;
}

int sPush( stack *s, stype data ) {
    /*
     * push data in stack s.
     */
    snode *ptr = (snode *)malloc( sizeof(snode) );
    ptr->data = data;
    ptr->next = *s;
    *s = ptr;

    return SUCCESS;
}

stype sPop( stack *s ) {
    /*
     * returns data at top of stack s.
     */
    stype data;
    snode *ptr;
```

ABC Amber CHM Converter Trial version, http://www.processtext.com/abcchm.html

```
    if( sEmpty(*s) ) {
        fprintf( stderr, "ERROR : popping from empty stack.\n" );
        return (stype)NULL;
    }
    data = (*s)->data;
    ptr = *s;
    (*s) = (*s)->next;
    free(ptr);
    return data;
}

int sEmpty( stack s ) {
    return ( s == NULL );
}

/******************* main.c *******************/
#include <stdio.h>
#include <malloc.h>
#include "stack.c"

typedef int ttype;
typedef struct tnode tnode;

struct tnode {
   ttype data;
   tnode *left;
   tnode *right;
};

tnode *tree = NULL;

int tInsert( ttype data ) {
    /*
     * insert data into global tree.
     */
    tnode *ptr = (tnode *)malloc( sizeof(tnode) );
    ptr->data = data;
    ptr->left = NULL;
    ptr->right = NULL;
    tInsertPtr( &tree, ptr );
}

int tInsertPtr( tnode **tree, tnode *ptr ) {
```

ABC Amber CHM Converter Trial version, http://www.processtext.com/abcchm.html

```
    /*
     * inserts ptr into tree recursively.
     */
    if( *tree != NULL ) {
        if( ptr->data < (*tree)->data )
               tInsertPtr( &((*tree)->left), ptr );
        else
               tInsertPtr( &((*tree)->right), ptr );
    }
    else
        *tree = ptr;
    return SUCCESS;
}

void tPrint( tnode *tree ) {
   /*
    * prints tree in inorder recursively.
    */
   if( tree != NULL ) {
       printf( "going left of %d...\n", tree->data );
       tPrint( tree->left );
       printf( "%d ", tree->data );
       printf( "going right of %d...\n", tree->data );
       tPrint( tree->right );
       printf( "tree of %d is over.\n", tree->data );
   }
}

void tIterPostorder( tnode *tree ) {
    /*
     * prints tree in postorder iteratively using 2 stacks.
     */
     stack s1, s2;
     sInit(&s1); sInit(&s2);

     if( tree != NULL ) {
         sPush( &s1, tree );

         while( !sEmpty(s1) ) {
                tnode *t = sPop(&s1);
                sPush( &s2, t );
                if( t->left != NULL )
                          sPush( &s1, t->left );
                if( t->right != NULL )
```

ABC Amber CHM Converter Trial version, http://www.processtext.com/abcchm.html

```
                        sPush( &s1, t->right );
        }
        while( !sEmpty(s2) )
                printf( "%d\n", sPop(&s2)->data );
    }
}

int main() {
    tInsert(4);
    tInsert(2);
    tInsert(5);
    tInsert(1);
    tInsert(3);
    tInsert(6);
    //tInsert(7);
    tPrint(tree);
    tIterPostorder(tree);
}
```

Explanation

1. In a postorder traversal, a node's left subtree is first output, followed by the right subtree, and finally the node is output. Thus, we need a stack in which we push the right child, followed by the left child. But we also need the node itself in the output. So, we will have to push it again in the stack before pushing its children. But then how will we keep track of whether that node is already processed? If we don't, we will again push it and its children in the stack, forming an infinite loop!
2. One way is to tag it as ‘processed.’ This can be done by adding a field to each node that will specify its status. Another way is to keep a list of processed nodes. We use this latter approach, maintaining a stack of processed nodes. The reason for using a stack is that when all the nodes in the tree are processed, the nodes in the stack give postorder traversal in reverse. Thus, by popping the nodes and outputting one by one, we get the required postorder traversal.
3. **Example**:

ABC Amber CHM Converter Trial version, http://www.processtext.com/abcchm.html

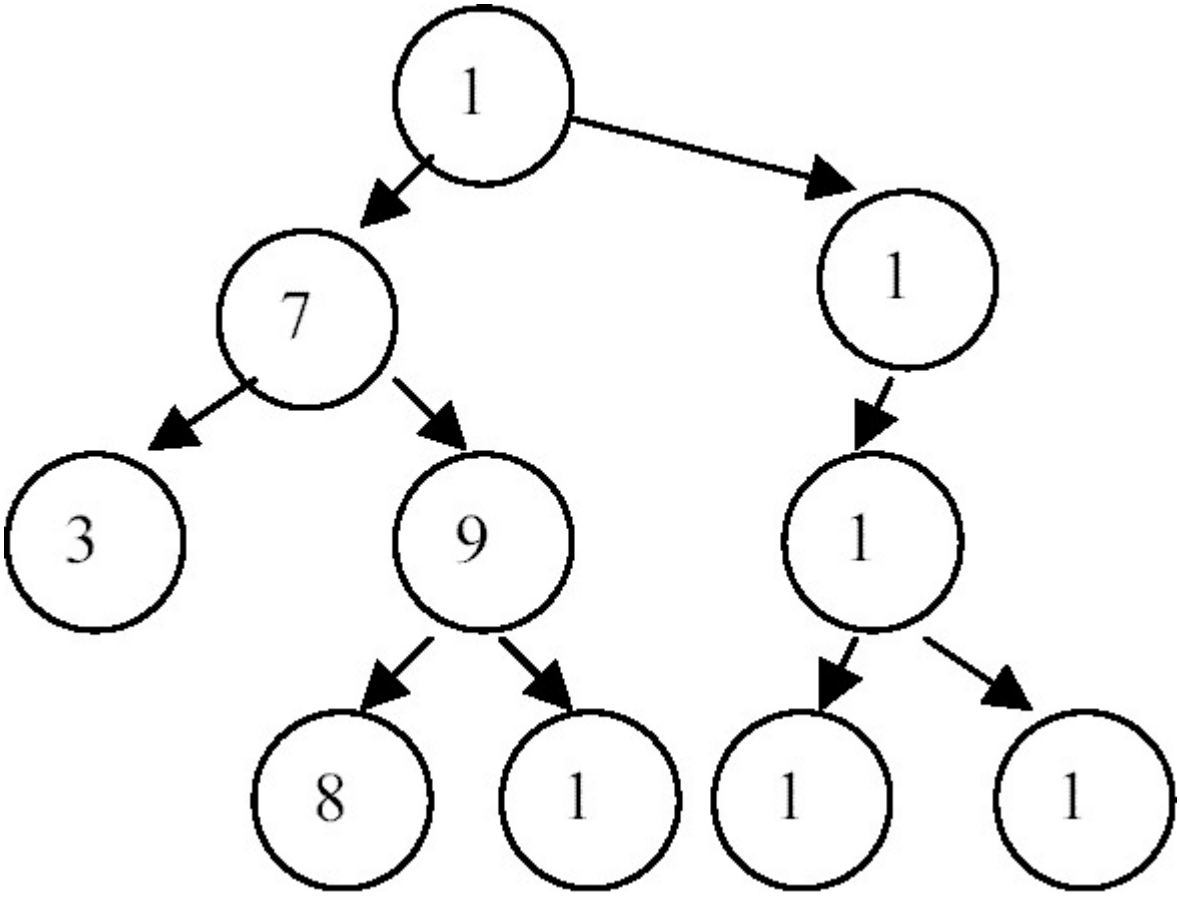

The postorder traversal of this tree is 3, 8, 11, 9, 7, 13, 15, 14, 18, 12. The stepwise run of the algorithm is shown next:

step	node	stack 1	stack 2
0	nil	empty	empty
1	12	7 18	12
2	18	7 14	12 18
3	14	7 13	15 12 18 14
4	15	7 13	12 18 14 15
5	13	7 12	18 14 15 13
6	7	3 9	12 18 14 15 13 7
7	9	3 8 11	12 18 14 15 13 7 9
8	11	3 8	12 18 14 15 13 7 9 11
9	8	3	12 18 14 15 13 7 9 11 8
10	3	empty	12 18 14 15 13 7 9 11 8 3

Stack 2 can now be output to get the required postorder traversal of the tree.

Points to Remember

1. Iterative postorder requires a stack.
2. Keeping stack processing and tree processing separate helps us to make the program modular. This can help us in using the same implementation of the stack for some other application, by

making changes in only the data type contained in the stack.

3. The left child of a node is first pushed to the stack, followed by the right child.
4. The recursive version is more readable than the iterative version. This is because the tree data structure itself is inherently recursive.

Previous Next

ABC Amber CHM Converter Trial version, http://www.processtext.com/abcchm.html

PROBLEM: PREORDER TRAVERSAL OF A THREADED BINARY TREE

Write a function to traverse an inorder threaded binary tree in preorder.

Program

```
#include <stdio.h>

#define SUCCESS 0
#define ERROR    -1

typedef int type;
typedef struct node node;
typedef enum {FALSE, TRUE} bool;

struct node {
    type data;
    node *lchild, *rchild;
    bool lthread, rthread;
};

/* NOTE: since this is a threaded binary tree, there wont be any condition */
/* of type (ptr == NULL).                                                   */

node tree;

void tInit() {
    tree.lchild = tree.rchild = &tree;
    tree.lthread = TRUE;
    tree.rthread = FALSE;
    tree.data = 99999999;
}

node *insucc( node *t ) {
    /*
     * find inorder successor of t.
     */
    node *temp = t->rchild;
    if( t->rthread == FALSE )
        while( temp->lthread == FALSE )
               temp = temp->lchild;
    return temp;
}
```

ABC Amber CHM Converter Trial version, http://www.processtext.com/abcchm.html

```
node *inpred( node *t ) {
    /*
     * find inorder predecessor of t.
     */
    node *temp = t->lchild;
    if( t->lthread == FALSE )
        while( temp->rthread == FALSE )
               temp = temp->rchild;
    return temp;
}

int tInsertRight( node *s, node *t ) {
    /*
     * insert t as right child of s.
     */
    node *temp;

    t->rchild = s->rchild;
    t->rthread = s->rthread;
    t->lchild = s;
    t->lthread = TRUE;
    s->rchild = t;
    s->rthread = FALSE;
    if( t->rthread == FALSE ) {
        temp = insucc(t);
        temp->lchild = t;

    }
    return SUCCESS;
}

int tInsertLeft( node *s, node *t ) {
    /*
     * insert t as left child of s.
     */
    node *temp;

    t->lchild = s->lchild;
    t->lthread = s->lthread;
    t->rchild = s;
    t->rthread = TRUE;
    s->lchild = t;
    s->lthread = FALSE;
```

ABC Amber CHM Converter Trial version, http://www.processtext.com/abcchm.html

```
    if( t->lthread == FALSE ) {
        temp = inpred(t);
        temp->rchild = t;
    }
    return SUCCESS;
}

node *tGetNewNode( type data ) {
    /*
     * returns a new node containing the data.
     */
    node *ptr = (node *)malloc( sizeof(node) );
    ptr->data = data;
    ptr->lchild = ptr->rchild = NULL;
    ptr->lthread = ptr->rthread = FALSE;
    return ptr;
}

int tInsert( node *t, type data ) {
    /*
     * insert data in t recursively.
     */
    if( data < t->data )
       if( t->lthread == TRUE )
                 tInsertLeft( t, tGetNewNode(data) );
       else
                 tInsert( t->lchild, data );
     else
         if( t->rthread == TRUE )
                   tInsertRight( t, tGetNewNode(data) );
         else
                   tInsert( t->rchild, data );
     return SUCCESS;
}

void tPrint( node *t ) {
   /*
    * prints t inorder recursively without using threads.
    */
   if( t != &tree ) {
       if( t->lthread == FALSE )
                 tPrint( t->lchild );
       printf( "%d\n", t->data );
       if( t->rthread == FALSE )
```

ABC Amber CHM Converter Trial version, http://www.processtext.com/abcchm.html

```
                tPrint( t->rchild );
    }
}

void tPrintPreorder( node *t ) {
    /*
     * prints tree preorder (no use of threads).
     */
    if( t != &tree ) {
        printf( "%d\n", t->data );
        if( t->lthread == FALSE )
                tPrintPreorder( t->lchild );
        if( t->rthread == FALSE )
                tPrintPreorder( t->rchild );
    }
}

void tPrintInorder( node *tree ) {
    /*
     * prints tree inorder using threads.
     */
    node *temp = tree;
    do {
       temp = insucc(temp);
       if( temp != tree )
              printf( "%d\n", temp->data );
    } while( temp != tree );
}

int main() {
     tInit();
     tInsert( &tree, 4 );
     tInsert( &tree, 2 );
     tInsert( &tree, 1 );
     tInsert( &tree, 3 );
     tInsert( &tree, 6 );
     tInsert( &tree, 5 );
     tInsert( &tree, 7 );
     tPrint( tree.lchild );
     printf( "\n" );
     tPrintPreorder( tree.lchild );

     return 0;
}
```

ABC Amber CHM Converter Trial version, http://www.processtext.com/abcchm.html

Explanation

1. In a threaded binary tree, the `NULL` links of leaf nodes are replaced by pointers (called threads) to other nodes in the tree. If `p→rightchild` is normally equal to `NULL`, it is replaced by a pointer to the node which would be printed after `p` when traversing the tree in inorder. A `NULL leftchild` link at node `p` is replaced by a pointer to the node that immediately precedes node `p` in inorder. The left link of the first node and the right link of the last node printed in the inorder traversal point to a dummy head node of the tree, and all the nodes appear in the left subtree of this head node. For example, in this representation, a tree such as the one shown next, where solid pointers are normal links and the dotted pointers are threads, `t` means `TRUE` and f means `FALSE`.

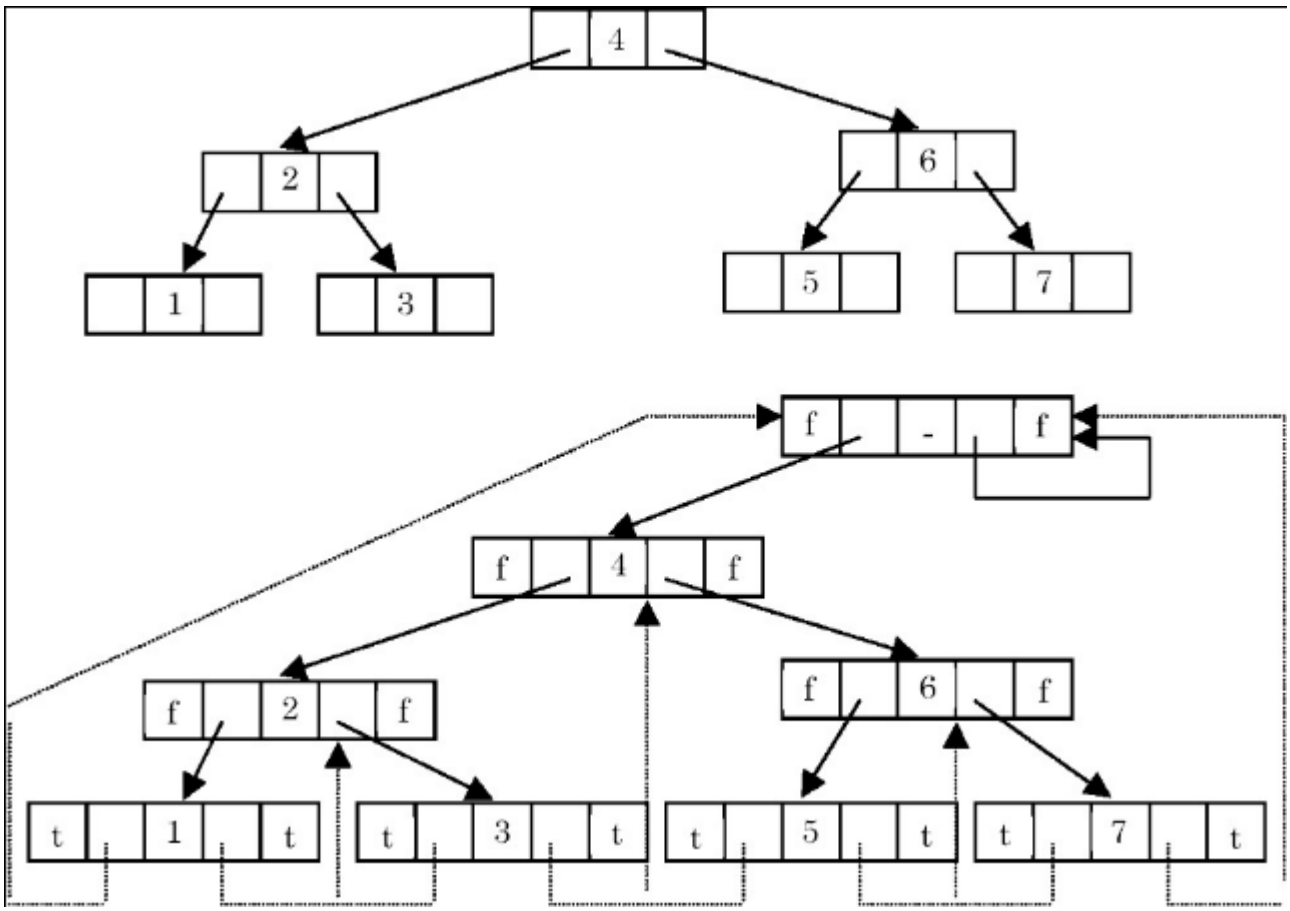

2. In the memory representation, we should be able to distinguish between threads and normal pointers. This is done by adding two Boolean fields to the structure: `leftthread` and `rightthread`. If `tree→leftthread==TRUE`, then `tree→leftchild` contains a thread; otherwise, it contains a pointer to the `leftchild`. Similarly, if `tree→rightthread == TRUE`, then `tree→rightchild` contains a thread. Otherwise it contains a pointer to the `rightchild`.
3. The function to traverse a threaded binary tree remains as simple as that for the normal binary tree. One simply needs to check for a link not that is not a thread, and traverse it. So the recursive function `tPrintPreorder()` is self-explanatory. For example, the preorder traversal of the tree above is 4, 2, 1, 3, 6, 5, 7.

Points to Remember

1. Some traversing algorithms are simplified by making a tree threaded.
2. Making a tree threaded makes insertions and deletions clumsy. Also, the node size increases. So this increased complexity should be taken into consideration when using a threaded binary tree for an application.
3. Keeping a dummy head node helps in easy insertions, deletions, and traversals.

Previous Next

ABC Amber CHM Converter Trial version, http://www.processtext.com/abcchm.html

ABC Amber CHM Converter Trial version, http://www.processtext.com/abcchm.html

PROBLEM: IMPLEMENTATION OF A SET USING A BINARY TREE

Implement `union()` and `find()` operations on sets represented as trees.

Program

```
#include <stdio.h>

#define N 100 // max no of elements together in all sets.

typedef int type;
typedef struct node node;

struct node {
   type val;          // this is value of member.
   int parent;                // this is index of parent in the array.
};

node sets[N];        // all sets are contained in it.
int setsindex = 0;   // total no of elements in sets.

int insertRoot( type val ) {
    /*
     * insert val in sets as a root of a new tree.
     */
    sets[setsindex].val = val;
    sets[setsindex].parent = -1;
    setsindex++;

    return setsindex-1;
}

void insertElement( int rootindex, type val ) {
   /*
    * insert element val in set whose root is indexed at rootindex.
    */
   sets[setsindex].val = val;
   sets[setsindex].parent = rootindex;
   setsindex++;
}

int buildSet( type a[], int n ) {
    /*
```

ABC Amber CHM Converter Trial version, http://www.processtext.com/abcchm.html

```
     * repeated calls to this fun with diff arrays will insert diff set in
sets.
     * forms a tree representation of elements in a.
     * n is number of elements in the set.
     * empty set(n==0) cannot be represented here.
     * returns index of root.
     */
    int i, rootindex;
    if( n <= 0 ) {
        fprintf( stderr, "n should be > 0.\n" );
        return -1;
    }
    // check whether there is enough space for n elements.
    if( setsindex+n > N ) {
        fprintf( stderr, "ERROR: set overflow.\n" );
        return -1;
    }
    // a[0] becomes the root.
    rootindex = insertRoot( a[0] );
    for( i=1; i<n; ++i )
        insertElement( rootindex, a[i] );

    return rootindex;
}

void printSets() {
    int i;
    printf( "\n" );
    for( i=0; i<setsindex; ++i )
        printf( "%d %d.\n", sets[i].val, sets[i].parent );
    printf( "\n" );
}

int unionSets( int rindex1, int rindex2 ) {
    /*
     * makes a union of sets whose root indices are rindex1 and rindex2.
     */
    sets[rindex2].parent = rindex1;
    // or the reverse.
    return rindex1;          // root of the union.
}

int findSet( int valindex ) {
    /*
```

ABC Amber CHM Converter Trial version, http://www.processtext.com/abcchm.html

```
     * given a val at index valindex in the array, finds index of its root.
     */
    for( ; sets[valindex].parent!=-1; valindex=sets[valindex].parent )
        ;
    return valindex;
}

int getIndex( type val ) {
    /*
     * dummy procedure to return index in array of val.
     */
    int i;
    for( i=0; i<setsindex; ++i )
        if( sets[i].val == val )
                return i;
    return -1;
}

int main() {
    type s1[] = {1,7,8,9};
    type s2[] = {5,2,10};
    type s3[] = {3,4,6};
    int i1 = buildSet( s1, 4 );
    int i2 = buildSet( s2, 3 );
    int i3 = buildSet( s3, 3 );

    //printSets();

    i1 = unionSets( i1, i2 );
    printf( "%d %d.\n", 3, sets[findSet( getIndex(3) )].val );
    printf( "%d %d.\n", 5, sets[findSet( getIndex(5) )].val );
    printf( "%d %d.\n", 2, sets[findSet( getIndex(2) )].val );

    i3 = unionSets( i3, i1 );
    printf( "%d %d.\n", 3, sets[findSet( getIndex(3) )].val );
    printf( "%d %d.\n", 5, sets[findSet( getIndex(5) )].val );
    printf( "%d %d.\n", 7, sets[findSet( getIndex(2) )].val );

    printSets();
    return 0;
}
```

Explanation

1. We represent sets as trees in which different elements are stored as nodes in a tree. Since the order of elements is immaterial in sets, the order of nodes also does not matter in the tree.

However, the links of the tree are reversed, that is, the child nodes have links to the parent instead of the parent pointing to its children. The reason for this representation is discussed next.

Example:

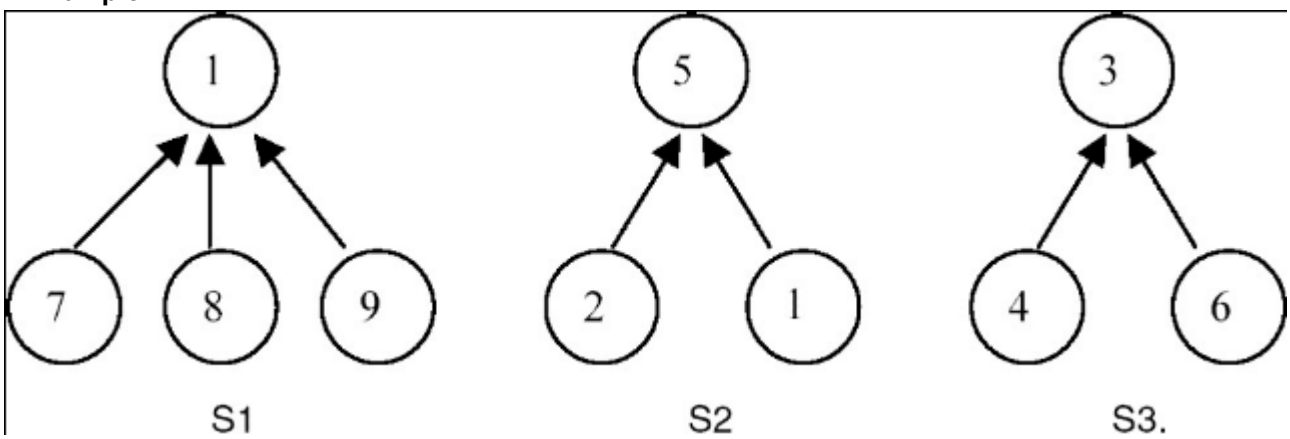

2. Union of two disjointed sets S1 and S2 (`unionSets()`) under the tree representation can be carried out simply by making any node of S1 the parent node of the root node of S2, or vice-versa. This operation can be carried out in a constant amount of time.

   Example:

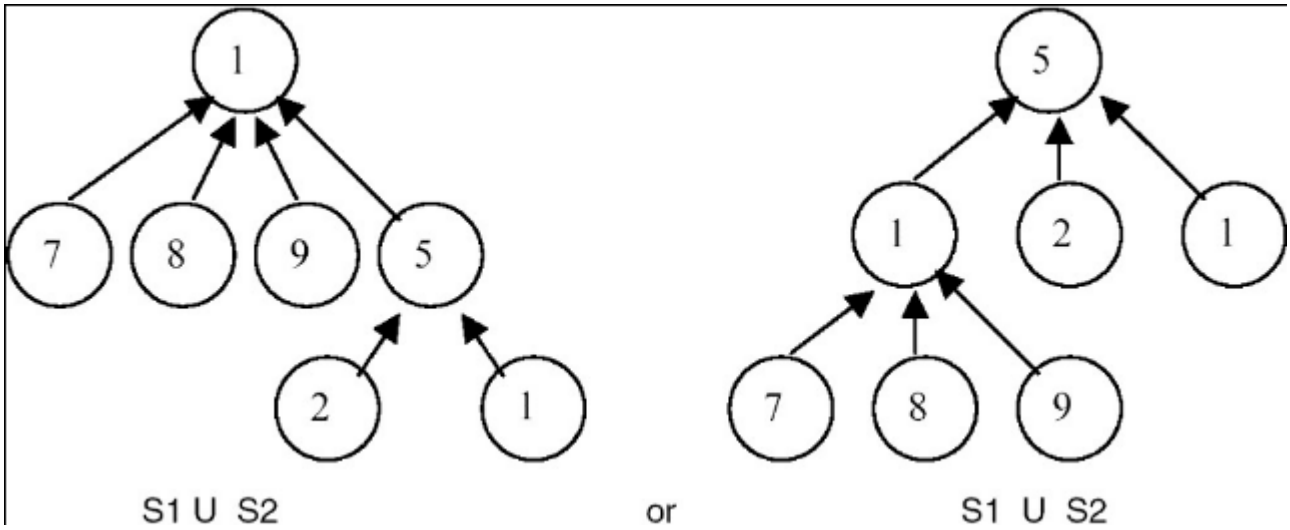

3. The find operation (`findSet()`) searches for the root of an element in the tree. It travels from that element upwards in the hierarchy until it reaches a node that has no parent. Thus, its root is determined. The complexity of the `find()` operation is O(*h*) where *h* is the height of the tree. If the height remains below O(log *n*), the operation is faster. However, the worst-case time is linear. This O(*n*) time appears when each node (except the root) has only one predecessor.

   Example: ple: The root of vertex 8 in S1 in the last example is 1. However, the root of 8 in (S1 U S2) is 1 or 5 depending on how the union is done.

4. The program stores all the sets in a global array of nodes. Each node contains the value of the element and the index of its parent element. To make `find()` efficient, each node is connected directly to the root node. The function `unionSets(i1, i2)` take indices of root elements and makes `i1` the parent of the root node pointed to by `i2`. The function `findSets(index)` travels backwards from the node pointed to by the index until it reaches any of the root nodes. The root node has a parent index equal to –1.

Points to Remember

1. The function `union()` does not work if the sets are not disjointed.
2. Operations `union()` and `find()` were devised from specific applications that use symbol tables. This asks for a specific representation of data in the form of a tree with reversed links. This shows how closely algorithms and data structures are related.
3. `union()` has a complexily of O(1), while `find()` has the worst-case complexity of O(*h*), where *h* is the height of the element in the tree.

Previous Next

ABC Amber CHM Converter Trial version, http://www.processtext.com/abcchm.html

ABC Amber CHM Converter Trial version, http://www.processtext.com/abcchm.html

PROBLEM: HUFFMAN CODING

Write a program to find Huffman codes for a set of characters, given the frequency of occurrence of each of these characters.

Program

```
/********************** huffman.q.h ************************/
#include <stdio.h>

typedef struct qnode qnode;
typedef tree qtype;
typedef struct {
    qnode *front;
    qnode *rear;
} queue;

struct qnode {
    qtype op;
    qnode *next;
};

bool qEmpty( queue *q ) {
    return (q->front == NULL);
}

void qPushBack( queue *q, qtype op ) {
    /*
     * pushes op at q.rear.
     */
    qnode *ptr = (qnode *)malloc( sizeof(qnode) );
    ptr->op = op;
    ptr->next = NULL;
    if( qEmpty(q) )    // first element in q.
        q->front = ptr;
    else
        q->rear->next = ptr;
    q->rear = ptr;
}

void qInsertSorted(queue *q, qtype op) {
   /*
    * inserts val in sorted q and keeps new q sorted.
    */
```

ABC Amber CHM Converter Trial version, http://www.processtext.com/abcchm.html

```
   qnode *ptr = (qnode *)malloc(sizeof(qnode));
   qnode *curr, *prev;
   ptr->op = op;

   for(prev=NULL, curr=q->front; curr && curr->op->w < op->w; prev=curr,
curr=curr->next)
       ;
   if(!curr && !prev)    // q empty.
       ptr->next = NULL, q->rear = q->front = ptr;
   else if(!curr)       // op is the max value.
       ptr->next = NULL, prev->next = q->rear = ptr;
   else if(!prev)       // op is the min value.
       ptr->next = curr, q->front = ptr;
   else { // if prev and ptr both exist.
      ptr->next = curr;
      prev->next = ptr;
   }
}

qtype qPopFront( queue *q ) {
    /*
     * pops op from q->front.
     */
    qnode *ptr = q->front;
    qtype op;

    if( qEmpty(q) )
        return (qtype)NULL;
    q->front = q->front->next;
    if( qEmpty(q) ) q->rear = NULL;

    op = ptr->op;
    free(ptr);
    return op;
}

/******************** huffman.c *************************/
#include <stdio.h>

#define MAXLEN 80

typedef struct node node;
typedef char type;
typedef node *tree;
```

ABC Amber CHM Converter Trial version, http://www.processtext.com/abcchm.html

```
typedef enum {FALSE, TRUE} bool;

struct node {
    int w;
    type val;
    node *left, *right;
};

#include "huffman.q.h"

int compare(const void *e1, const void *e2) {
    /*
     * compare the two elements in e1 and e2.
     * each element is a vector of two elements.
     */
     return ((int *)e1)[1] > ((int *)e2)[1];
}

void printTree(tree t, char *outputstr) {
    /*
     * print the huffman codes for each element of t.
     * outputstr contains huffman code for t (NOT parent of t).
     * assumes t!=NULL.
     */
   char str[2] = "1";

   if(t->right) {
      strcat(outputstr, str);
      printTree(t->right, outputstr);
      outputstr[strlen(outputstr)-1] = 0; // restore.
   }
    if(t->left) {
       str[0] = '0';
       strcat(outputstr, str);
       printTree(t->left, outputstr);
       outputstr[strlen(outputstr)-1] = 0; // restore.
    }
    else if(!t->right)
       printf("%c=%d=%s.\n", t->val, t->w, outputstr);
}

tree buildTree(int a[][2], int n) {
    /*
     * build a huffman tree using frequency in a[i][1] where a[0][j] indicates
```

ABC Amber CHM Converter Trial version, http://www.processtext.com/abcchm.html

```
     * the character
     * for that sort a on frequency.
     * n is the size of a.
     */
    int i;
    tree t = NULL;
    queue sortedq = {NULL};

    // sort a on frequency.
    qsort(a, n, sizeof(a[0]), compare);

    // insert each element in tree.
    for(i=0; i<n; ++i) {
       tree temp = (tree)calloc(1, sizeof(node));
       temp->w = a[i][1];
       temp->val = (type)a[i][0];
       qPushBack(&sortedq, temp);
    }
    // assume n>0.
    while(TRUE) {
       tree t2 = NULL,
               t1 = qPopFront(&sortedq);
       if(!qEmpty(&sortedq))
              t2 = qPopFront(&sortedq);
       else {
             t = t1;
             break;
       }

          t = (tree)malloc(sizeof(node));
          t->w = t1->w + t2->w;
          t->left = t1;
          t->right = t2;
           {
                   qnode *ptr;
                   for(ptr=sortedq.front; ptr; ptr=ptr->next)
                          printf("%d ", ptr->op->w);
                   printf("\n");
          }
          printf("insertsorted=%d.\n", t->w);
          qInsertSorted(&sortedq, t);
     }
     return t;
}
```

ABC Amber CHM Converter Trial version, http://www.processtext.com/abcchm.html

```
int main() {
    int a[][2] = { {'a', 20},
                   {'b', 23},
                   {'c', 14},
                   {'d', 56},
                   {'e', 35},
                   {'f', 29},
                   {'g', 5 }
                 };
   char outputstr[MAXLEN] = "";
   tree t = buildTree(a, sizeof(a)/2/sizeof(int));

   if(t)
      printTree(t, outputstr);

   return 0;
}
```

Explanation

1. Many applications prefer that frequently occurring messages have smaller lengths during coding, to make efficient use of the available bandwidth. This can be done by finding a binary tree with minimum weighted external path length. An external path length of a binary tree is the sum of all external nodes of the lengths of the paths, from the root to those nodes. The `null` nodes in a tree are called external nodes. Weighted external path length can be obtained by multiplying the external path length of each node by the frequency contained in the node, and than adding all of these values.
   Example: ple: External path lengths of nodes A, B, C, D are 2, 2, 2, 2 and the weighted external path length of the tree is
   2*2 + 2*4 + 2*5 + 2*15 = 52.

ABC Amber CHM Converter Trial version, http://www.processtext.com/abcchm.html

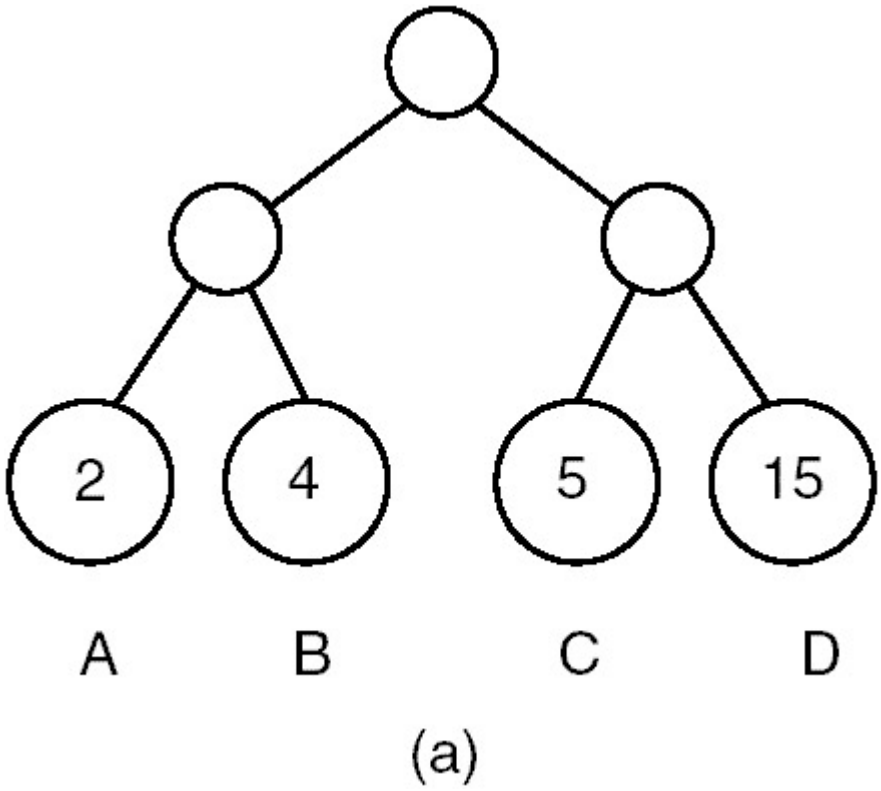

Note that this is not the minimum weighted path length. The minimum weighted path length can be obtained by restructuring the tree as shown here.

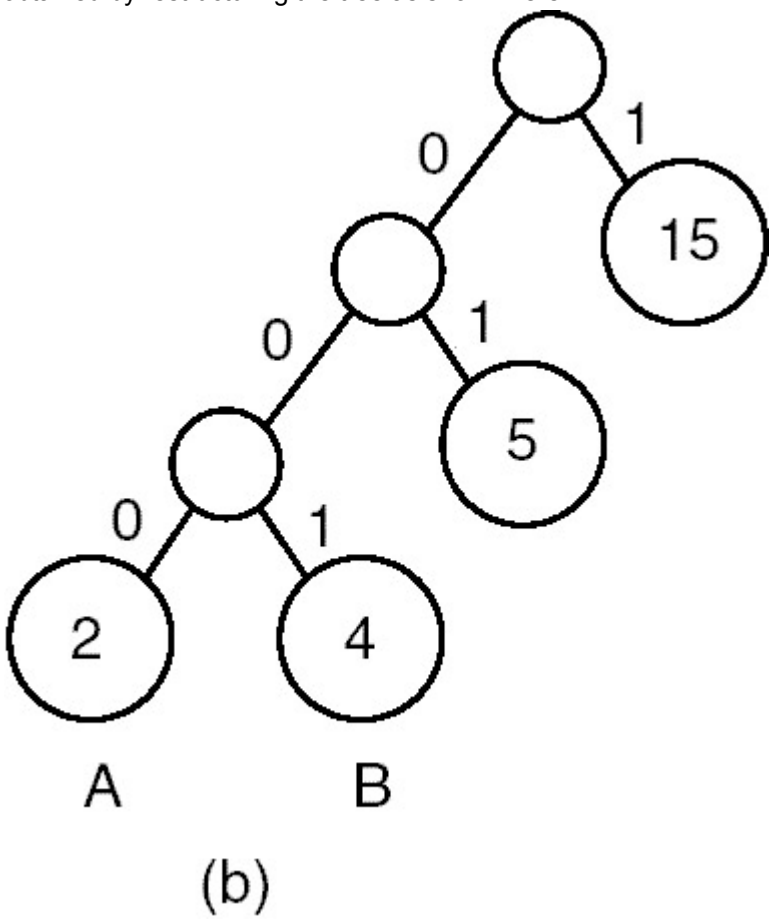

The path length of this tree is 1*15 + 2*5 + 3*2 + 3*4 = 43, which is minimum. The numbers 0 and 1 of the edges will be clear in the following description.

2. An easy and nice solution to the problem of finding a binary tree with minimum weighted external

path length is given by D. Huffman. We implement the algorithm in the function `buildTree()`. This algorithm first prepares a list of nodes out of the input characters and their frequencies. This list is sorted on the frequency in ascending order. Thus every retrieval retrieves the node with minimum frequency count from the list. The function then contains a loop that runs until the list becomes empty. In each iteration, two nodes (with minimum frequencies f1 and f2) are retrieved from the list, and another node with the frequency count f1+f2 is added to the list. This node also becomes the parent node of the two retrieved nodes. Thus every iteration reduces the length of the list by 1. In the end, when the list contains only one node, the node is returned, as the root of the Huffman tree is built.

3. If we assume that the codes contain only two symbols, 0 and 1, then the edge to a left child can be named 0 while that to a right child can be named 1, or vice versa, as given in (b) in the last example. Thus, the codes for A, B, C, and D are 000, 001, 01, and 1.

Points to Remember

1. Huffman codes are useful to encode a message using minimum number of symbols.
2. Another big advantage of Huffman codes is that given a message string built from Huffman codes, we can uniquely divide the message into the patterns of individual characters. For example, the pattern 01001101 uniquely identifies the character sequence CBDC.
3. The complexity of `buildTree()` is O(*n* log*n*+*n*+*n*^2) for `qsort()`, `for` loop, and `while` loop. Note that the complexity of `qPushBack()` is O(1) while that of `qInsertSorted()` is O(`n`). Thus the overall complexity of `buildTree()` is O(`n`^2). The complexity of `qInsertSorted()` may be improved by using a heap instead of a sorted list.

Previous Next

ABC Amber CHM Converter Trial version, http://www.processtext.com/abcchm.html

PROBLEM: IMPLEMENTATION OF A B-TREE

Write procedures for insertion and deletion in a B-tree.

Program

```
/************************ b.q.c ****************************/
#include <malloc.h>
#include <stdlib.h>

typedef struct qnode qnode;
typedef btree qtype;

typedef struct {
    qnode *front;
    qnode *rear;
} queue;
struct qnode {
    qtype op;
    qnode *next;
};

bool qEmpty( queue *q ) {
    return (q->front == NULL);
}

void qPush( queue *q, qtype op ) {
    /*
     * pushes op at q.rear.
     */
     qnode *ptr = (qnode *)malloc( sizeof(qnode) );
     ptr->op = op;
     ptr->next = NULL;
     if( qEmpty(q) )     // first element in q.
         q->front = ptr;
     else
         q->rear->next = ptr;
     q->rear = ptr;
}

qtype qPop( queue *q ) {
    /*
     * pops op from q->front.
     */
```

ABC Amber CHM Converter Trial version, http://www.processtext.com/abcchm.html

```
     qnode *ptr = q->front;
     qtype op;

     if( qEmpty(q) )
         return (qtype)-1;
     q->front = q->front->next;
     if( qEmpty(q) )
        q->rear = NULL;

     op = ptr->op;

     free(ptr);

     return op;
}

/************************** b.c ****************************/
#include <stdio.h>

#define K 5

typedef struct node node;
typedef int type;
typedef node *btree;
typedef enum {FALSE, TRUE} bool;
#include "b.q.c"

struct node {
    type val[K];     // data in the node.
    // actually first K-1 vals are valid. Kth entry is used
                // during breaking of the node.
    btree ptr[K+1];    // pointers to other nodes in the node.
    // one extra ptr to be used in some loops.
    int nptr;          // no of pointers in the node = non-null ptrs.
    // this can also be used to see whether a node is a leaf.
    int nval;          // no of values in the node.
    // this is reqd even when nptr is present: for leaf nodes.
               // for non-leaf nodes: nptr = nval+1.
               // for leaf nodes: nptr = 0.
};

btree bNew() {
    /*
     * returns a new initialized node.
```

ABC Amber CHM Converter Trial version, http://www.processtext.com/abcchm.html

```
     */
     btree tree = (btree)malloc(sizeof(node));
     tree->nval = tree->nptr = 0;
     return tree;
}

void insertVal(btree tree, type val, btree ptr) {
   /*
    * insert (val, ptr) in node pointed to by tree without any checks.
    */

   int i, j;

   for(i=0; i<tree->nval && tree->val[i]<val; ++i)                    // since
K is usually < 10, dont use binsrch.
       ;
   // the val should be inserted at tree->val[i].
   // shift-next the next values by one position.
   for(j=tree->nval-1; j>=i; -j) {
       tree->val[j+1] = tree->val[j];
       tree->ptr[j+2] = tree->ptr[j+1];
   }
   // insert val now at i.
   tree->val[i] = val;
   tree->nval++;
   tree->ptr[i+1] = ptr;
   if(ptr != NULL)     // tree is NOT a leaf.
      tree->nptr++;
   printf("\tval %d inserted at position %d, tree->nptr=%d tree- >nval=%d.\n",
val, i, tree->nptr, tree->nval);
}

btree getSplitNode(btree tree) {
   /*
    * returns a new node containing vals and pointers from tree.
    */
   int i, j;
   btree ptr = bNew();

   // copy vals.
   for(i=(K-1)/2+1, j=0; i<K; ++i, ++j)
       ptr->val[j] = tree->val[i];
   ptr->nval = K/2;
   tree->nval = K-K/2-1;    // temporarily this node contains an extra val.
```

ABC Amber CHM Converter Trial version, http://www.processtext.com/abcchm.html

```
    // copy ptrs.
    for(i=(K-1)/2+1, j=0; i<=K; ++i, ++j)
        ptr->ptr[j] = tree->ptr[i];
    if(tree->nptr > 0) {     // non-leaf nodes.
        ptr->nptr = K/2+1;
        tree->nptr = K-K/2;
    }
    else                     // leaf nodes.
       tree->nptr = ptr->nptr = 0;
    return ptr;
}

btree bMakeChanges(btree tree, btree ptr, btree parent) {
    /*
     * last val of tree contains an extra val which should be
     * inserted in parent.
     * if parent == NULL, then tree was root.
     * tree = parent->ptr[i] if parent is NOT NULL.
     */
     // extract the last value from tree.
     type val = tree->val[tree->nval];
     printf("in bMakeChanges().\n");

     if(parent == NULL) {
        parent = bNew();
        parent->ptr[0] = tree;
        parent->nptr = 1;
     }
     if(parent->nval < K-1) { // parent has space.
        insertVal(parent, val, ptr);
     }
     else {                                                // parent full.
         printf("parent is full.\n");
         insertVal(parent, val, ptr);
         return getSplitNode(parent);
     }
     return parent;
}

btree bInsert(btree tree, type val) {
    /*
     * calls insert to insert val in tree.
     * if the return node is diff from tree, that means a new node has
```

ABC Amber CHM Converter Trial version, http://www.processtext.com/abcchm.html

```
     * been created. Thus calls bMakeChanges().
     */
    btree insert(btree tree, type val);

    btree ptr = insert(tree, val);
    if(ptr != tree) // node was split.
        return bMakeChanges(tree, ptr, NULL);
    return tree;
}

btree insert(btree tree, type val) {
    /*
     * inserts val in tree.
     * returns tree if there is no change.
     * if there is creation of a new node then the new node is returned.
     */
     int i;
     btree ptr;

     if(tree->nptr > 0) {       // non-leaf.
        for(i=0; i<tree->nval && tree->val[i]<val; ++i)                // since
K is usually < 10, dont use binsrch.
                  ;
        // the val should be in a tree pointed to by tree->ptr[i].
        printf("\tval should be inserted in tree->ptr[%d].\n", i);
        ptr = insert(tree->ptr[i], val);
        if(ptr != tree->ptr[i])
               return bMakeChanges(tree->ptr[i], ptr, tree);
        return tree;
    }
    else {    // tree is a leaf.
       if(tree->nval < K-1) {       // space is available in the leaf.
                insertVal(tree, val, NULL);
                return tree;
       }
       else {          // leaf full!
             printf("\tleaf is full.\n");
             insertVal(tree, val, NULL);
             // now break the leaf node.
             return getSplitNode(tree);
       }
    }
}
```

ABC Amber CHM Converter Trial version, http://www.processtext.com/abcchm.html

```
btree getAdjTree(btree tree, int offset, btree parent, int treeindex) {
   /*
    * returns parent[treeindex+offset] if exists else NULL.
    */
   int newindex = treeindex+offset;
   if(newindex >= 0 && newindex < parent->nptr)
      return parent->ptr[newindex];
   return NULL;
}

void combineNodes(btree left, btree right) {
   /*
    * left += right.
    */
   int i;
   int nptrleft = left->nptr;

   for(i=0; i<right->nval; ++i)
       left->val[left->nval++] = right->val[i];

   for(i=0; i<right->nptr; ++i)
       left->ptr[nptrleft+i] = right->ptr[i];
   if(left->nptr > 0)     // non-leaf.
      left->nptr += i;
}

type getNextVal(btree ptr) {
   /*
    * return the first value in the first leaf accessible from ptr.
    */
   if(ptr->nptr > 0) // still this is a non-leaf.
       return getNextVal(ptr->ptr[0]);
   return ptr->val[0];    // got it!
}

btree deleteVal(btree tree, int i) {
   /*
    * remove (val, ptr) at position i from tree without any checks.
    * and return tree->ptr[i+1].
    */
   btree rightptr = tree->ptr[i+1];     // ptr being removed along with val.

   if(i == -1)       // special case for a dummy call to this function.
       return;
```

ABC Amber CHM Converter Trial version, http://www.processtext.com/abcchm.html

```
   for(++i; i<tree->nval; ++i) {
       tree->val[i-1] = tree->val[i];
       tree->ptr[i] = tree->ptr[i+1];
   }
   tree->nval-;

   if(tree->nptr > 0)       // if it is a non-leaf.
      tree->nptr-;

   return rightptr;
}

btree bApplyChanges(btree tree, btree parent, int treeindex) {
   /*
    * apply changes: tree is a non-leaf and tree = parent- >ptr[treeindex].
    * also tree->nval < K/2.
    */
   int parentvalindex;
   int adjtreevalindex;
   btree returntree;
   btree adjtree;
   int offset = -1;    // predecessor.
   btree adjtreeleft;

   if(parent && tree->nval >= K/2)
      return tree;
   else if(parent == NULL && tree->nval == 0) {
       free(tree);
       return tree->ptr[0];
   }
   else if(parent == NULL)
       return tree;

   // parent is NOT NULL.

   adjtreeleft = adjtree = getAdjTree(tree, offset, parent, treeindex); //
predecessor.
   if(!adjtree || (adjtree && adjtree->nval <= K/2)) { // no extra val.
       offset = 1;          // successor.
       adjtree = getAdjTree(tree, offset, parent, treeindex);         //
successor.
       if(!adjtree || (adjtree && adjtree->nval <= K/2)) {    // no
```

ABC Amber CHM Converter Trial version, http://www.processtext.com/abcchm.html

```
extra val here too.
                  btree parentparent;
                  int parentindex;
                  type parentval;
                  btree returntree;

                  //printf("combine tree, parent median val, adjtree.\n");
                  //printf("also check parent for having <K/2 vals.\n");
                  // it is NOT possible that adjtreeleft and right both are
NULL.
                  // make adjtree point to the one which is NOT NULL.
                  if(!adjtree) {
                         adjtree = adjtreeleft;
                         offset = -1;
                  }
                  // adjtree points to the sibling: left or right.
                  parentvalindex = (2*treeindex+offset)/2;
                  // the parent val is indexed.

                  parentval = parent->val[parentvalindex];
                  deleteVal(parent, parentvalindex);
   // the return val is tree/adjtree. Hence dont worry.
                  if(offset == -1) {
                          // combine adjtree, parentval and tree.
                          adjtree->val[adjtree->nval++] = parentval;
                          combineNodes(adjtree, tree);
                          free(tree);
                          returntree = adjtree;
                  }
                  else {  // offset == 1: right sibling.
                          // combine tree, parentval and adjtree.
                          tree->val[tree->nval++] = parentval;
                          combineNodes(tree, adjtree); free(adjtree);
                          returntree = tree;
                  }
                  return returntree;
         }
         else {
               adjtreevalindex = 0;
               returntree = adjtree;
         }

      }
      else {
```

ABC Amber CHM Converter Trial version, http://www.processtext.com/abcchm.html

```
        adjtreevalindex = adjtree->nval-1;
        returntree = tree;
      }
      // adjtree has an extra val.
      parentvalindex = (2*treeindex+offset)/2;
      // insert parent val in tree.
      insertVal(tree, parent->val[parentvalindex], returntree->ptr[0]);
      // now promote val in adjtree to parent.
      parent->val[parentvalindex] = adjtree->val[adjtreevalindex];
      returntree->ptr[0] = deleteVal(adjtree, adjtreevalindex);

      return tree;
   }

   btree delete(btree tree, type val, int i, btree parent, int treeindex)
{
   /*
    * delete val from tree. val == tree->val[i].
    * and tree == parent->nptr[treeindex].
    */
   int parentvalindex;
   int adjtreevalindex;
   btree adjtree;
   btree bDelete(btree tree, type val, btree parent, int treeindex);

   if(tree->nptr == 0) {    // leaf.
       deleteVal(tree, i);

   // find two adjacent nodes to tree(succ and pred) and
   // see whether any of them has >K/2 vals. if yes then bring
   // the parent value between tree and the node into tree and
   // promote the value in the adjacent node into the parent.
   // if no such adjacent node exists, combine tree, parent val and
   // the adjacent node.
   // if this leaves parent node having <K/2 vals, go into else.
   // this is done in bApplyChanges().
   }
   else {                   // NOT a leaf.
       // find the next val in inorder traversal of this val and replace

       // this with that val. then delete that val from tree.
       type nextval = getNextVal(tree->ptr[i+1]); // since tree->val[i] exists

// tree->val[i+1] exists.
```

ABC Amber CHM Converter Trial version, http://www.processtext.com/abcchm.html

```
      tree->val[i] = nextval;
      bDelete(tree->ptr[i+1], nextval, tree, i+1);
   }
   return bApplyChanges(tree, parent, treeindex);
}

btree bDelete(btree tree, type val, btree parent, int treeindex) {
   /*
    * delete val from tree if exists.
    * tree == parent[treeindex].
    */
   int i;

   for(i=0; i<tree->nval && tree->val[i]<val; ++i)          // since K is
usually < 10, dont use binsrch.

        ;
   if(tree->val[i] == val) {
      printf("val=%d found: to be deleted.\n", val);
      return delete(tree, val, i, parent, treeindex);
   }
   else if(tree->nptr > 0) {          // the val should be in a tree pointed
to by tree->ptr[i].
      //printf("val=%d may be in tree->ptr[%d].\n", val, i);
      bDelete(tree->ptr[i], val, tree, i);
      //printf("now check tree for <50% values.\n");
      return bApplyChanges(tree, parent, treeindex);
   }
   else {    // leaf reached.
      printf("val=%d does NOT exist.\n", val);
      return tree;
   }
}
void bPrintFormatted(btree tree) {
   btree ptr;
   int i;
   queue q = {NULL};
   qPush(&q, tree);
   qPush(&q, NULL);

   -----------\n");

   while(qEmpty(&q) == FALSE) {
       ptr = qPop(&q);
```

ABC Amber CHM Converter Trial version, http://www.processtext.com/abcchm.html

```
        if(ptr) {
                for(i=0; i<ptr->nval-1; ++i)
                        printf("%d-", ptr->val[i]);
                if(i<ptr->nval)
                        printf("%d ", ptr->val[i]);
                for(i=0; i<ptr->nptr; ++i)
                        qPush(&q, ptr->ptr[i]);
        }
        else {
                printf("\n");
                if(qEmpty(&q) == FALSE)
                        qPush(&q, NULL);
        }
    }
    -----------\n");
}

int main() {
    btree tree = bNew();
    tree = bInsert(tree, 1);
    tree = bInsert(tree, 2);
    tree = bInsert(tree, 4);
    tree = bInsert(tree, 3);
    tree = bInsert(tree, 5);
    tree = bInsert(tree, 6);
    tree = bInsert(tree, 7);
    tree = bInsert(tree, 8);
    tree = bInsert(tree, 9);
    tree = bInsert(tree, 10);
    tree = bInsert(tree, 11);
    tree = bInsert(tree, 12);
    tree = bInsert(tree, 13);
    tree = bInsert(tree, 14);
    tree = bInsert(tree, 15);
    tree = bInsert(tree, 16);
    tree = bInsert(tree, 17);
    bPrintFormatted(tree);
    tree = bDelete(tree, 6, NULL, -320);
    bPrintFormatted(tree);
    tree = bDelete(tree, 9, NULL, -320);
    bPrintFormatted(tree);

    return 0;
}
```

ABC Amber CHM Converter Trial version, http://www.processtext.com/abcchm.html

Explanation

1. A B-tree of order K is a K-way search tree that is either empty or is of height > 0 and satisfies the following properties:
   a. the root node has at least two children.
   b. all nodes other than the root node and leaf nodes have at least ceil(K/2) children.
   c. all leaf nodes are at the same level.

   It is easier to insert and delete nodes into a B-tree retaining the B-tree properties than it is to maintain the best possible K-way search tree at all times. Thus, the reasons for using B-trees rather than optimal K-way search trees for indices are the same as those for using AVL trees, as opposed to optimal binary search trees, when maintaining dynamic internal tables.
2. Each B-tree node of order K has space for K pointers and K – 1 values. We maintain an extra space for one pointer and one value which will be useful in insertion. We maintain counts of the number of values and number of pointers present in the node. Thus the node structure for a B-tree is as follows:
3.
4. `typedef struct node *btree;`
5. `struct node {`
6. `  type val[K];`
7. `  btree ptr[K+1];`
8. `  int nptr;`
9. `  int nval;`
10. `};`

   `nptr` is the number of non-null pointers and `nval` is the number of valid values in a node. For a leaf-node, `nptr == 0`, while for all other nodes, `nptr == nval + 1`.
11. Insertion in a B-tree takes place by traversing the search tree for the value starting from root. When the search terminates in a leaf node, the value is inserted in the node. The node is then checked to see if thus more than K – 1 values. If the node has less than K values, the insertion is done. Otherwise, the node is split into two nodes of sizes floor(K/2) and the middle value is propagated into the parent node. This procedure is repeated until either the insertion stops (as there is space for the new value in a node) or nodes at all the levels in the tree get split and, finally, a new root node needs to be created. The value propagated from the original root is then put into the new root node and its pointers are adjusted accordingly.

Examples: Orignal tree of order K = 3

ABC Amber CHM Converter Trial version, http://www.processtext.com/abcchm.html

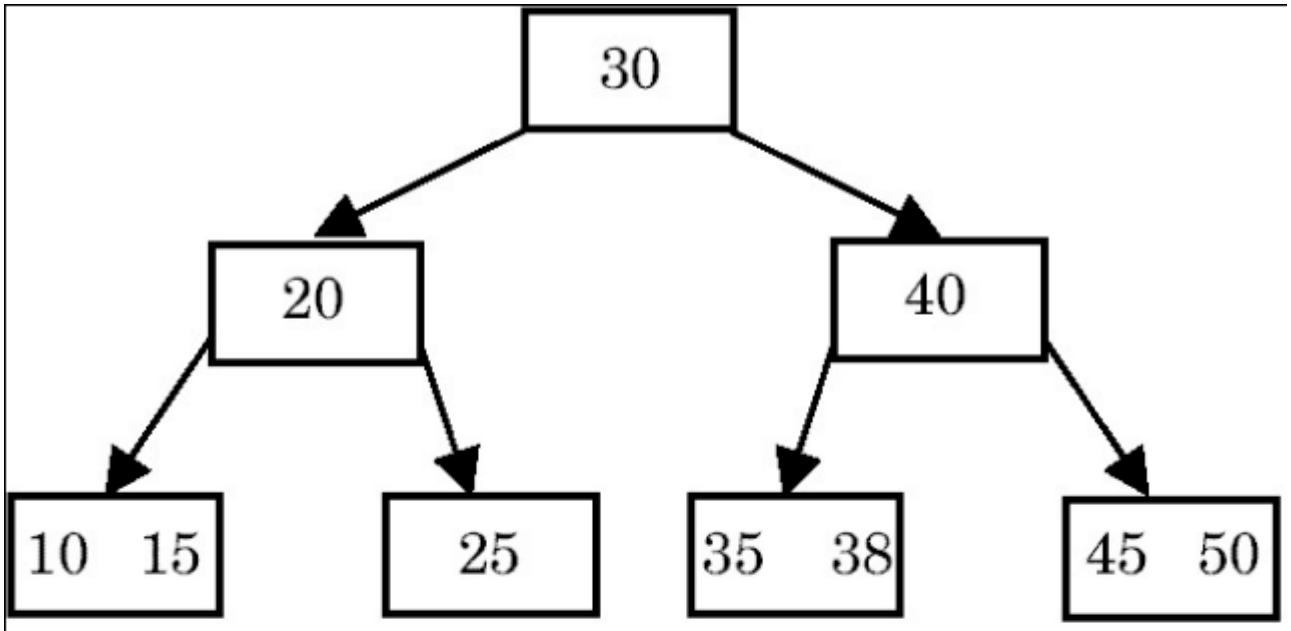

Insertion of value 28

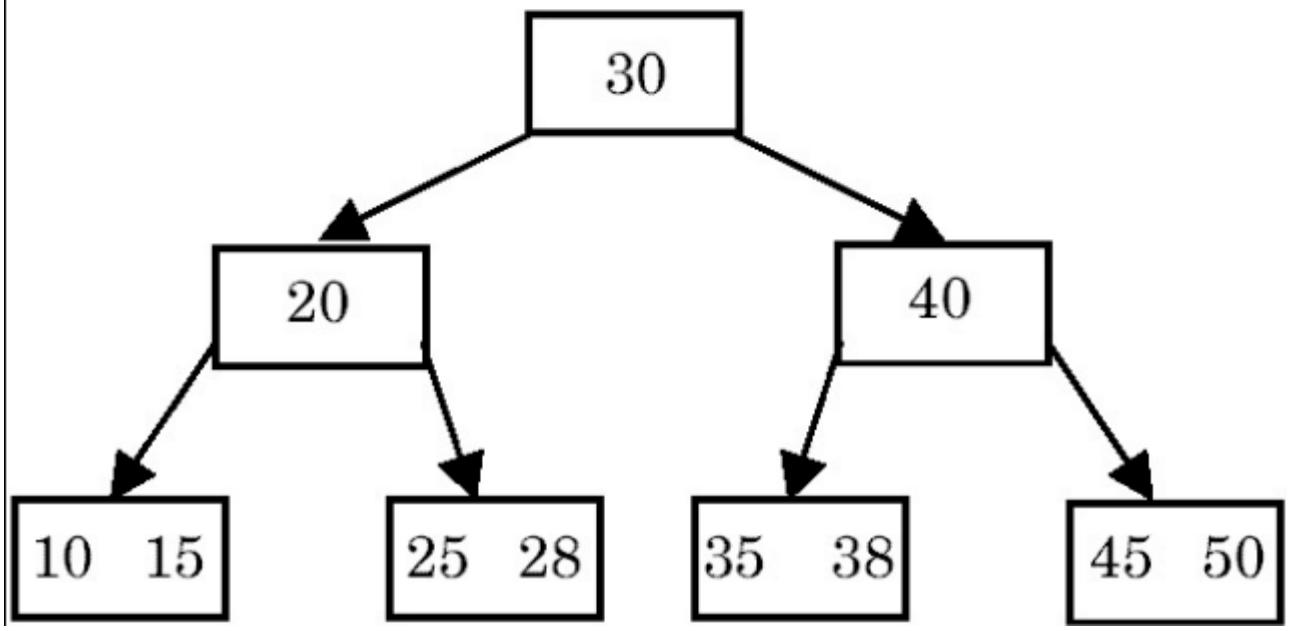

ABC Amber CHM Converter Trial version, http://www.processtext.com/abcchm.html

Insertion of value 55

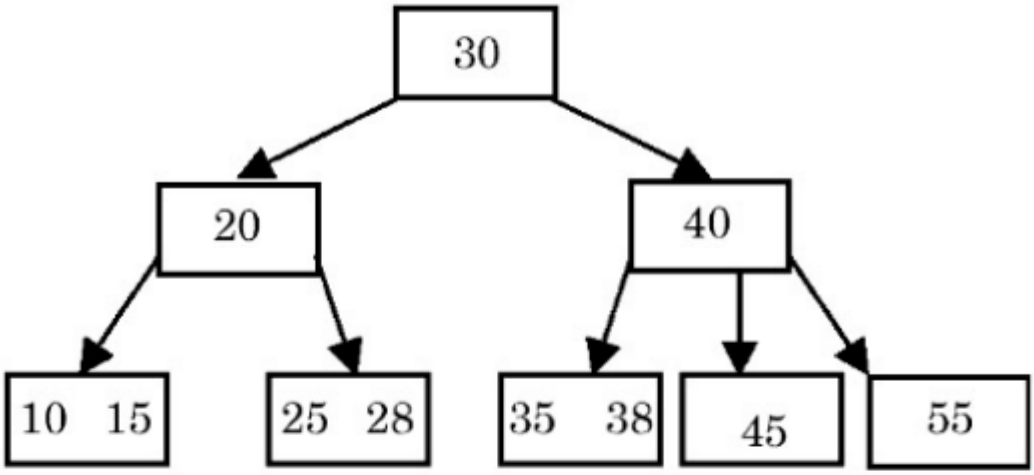

Insertion of value 37

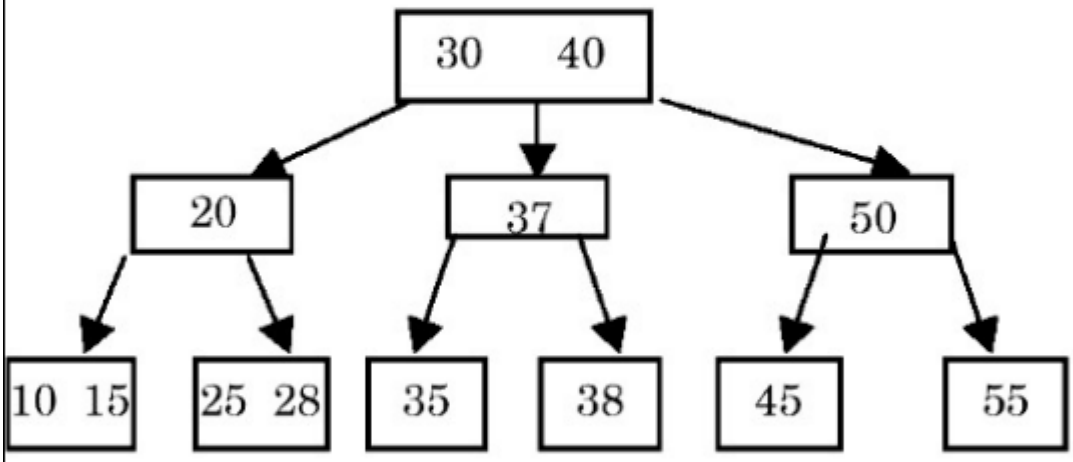

Insertion of value 5

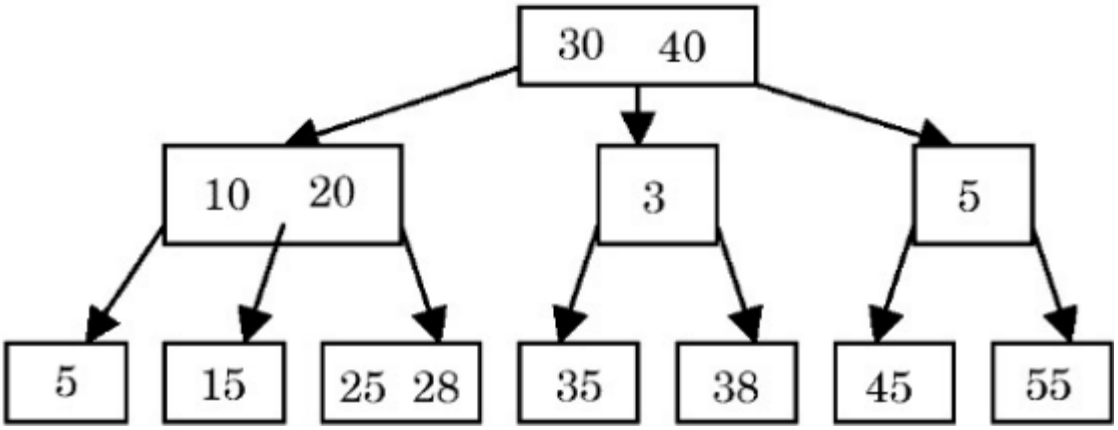

ABC Amber CHM Converter Trial version, http://www.processtext.com/abcchm.html

12. Deletion of a value from a B-tree can be done as simply as performing an insertion. If, even after deletion of the value from a leaf node `p`, the node contains >= K/2 values, then nothing needs to be done. Otherwise the sibling nodes are checked to see if they have > K/2 values. If such a sibling `q` exists, then the value in the parent node between the two adjacent leaf nodes is demoted to node `p`, and a value in node `q` is promoted to the parent (this is called rotation). However, if the value `v` to be deleted is in a non-leaf node `p`, then the next value (`w`) to `v` in the search order (which appears in the right subtree of `v` in the leaf node) is promoted at the place of `v` and the value `w` is deleted from the leaf node. If, in this promotion and demotion, the parent node r contains less than K/2 values, then its adjacent node `s` is promoted to its parent `t` and the value in `t` is demoted to `r`. Also, the adjacent pointer to the value promoted from `s` becomes the adjacent pointer to the parent value that has been newly inserted in `r`.

Examples:

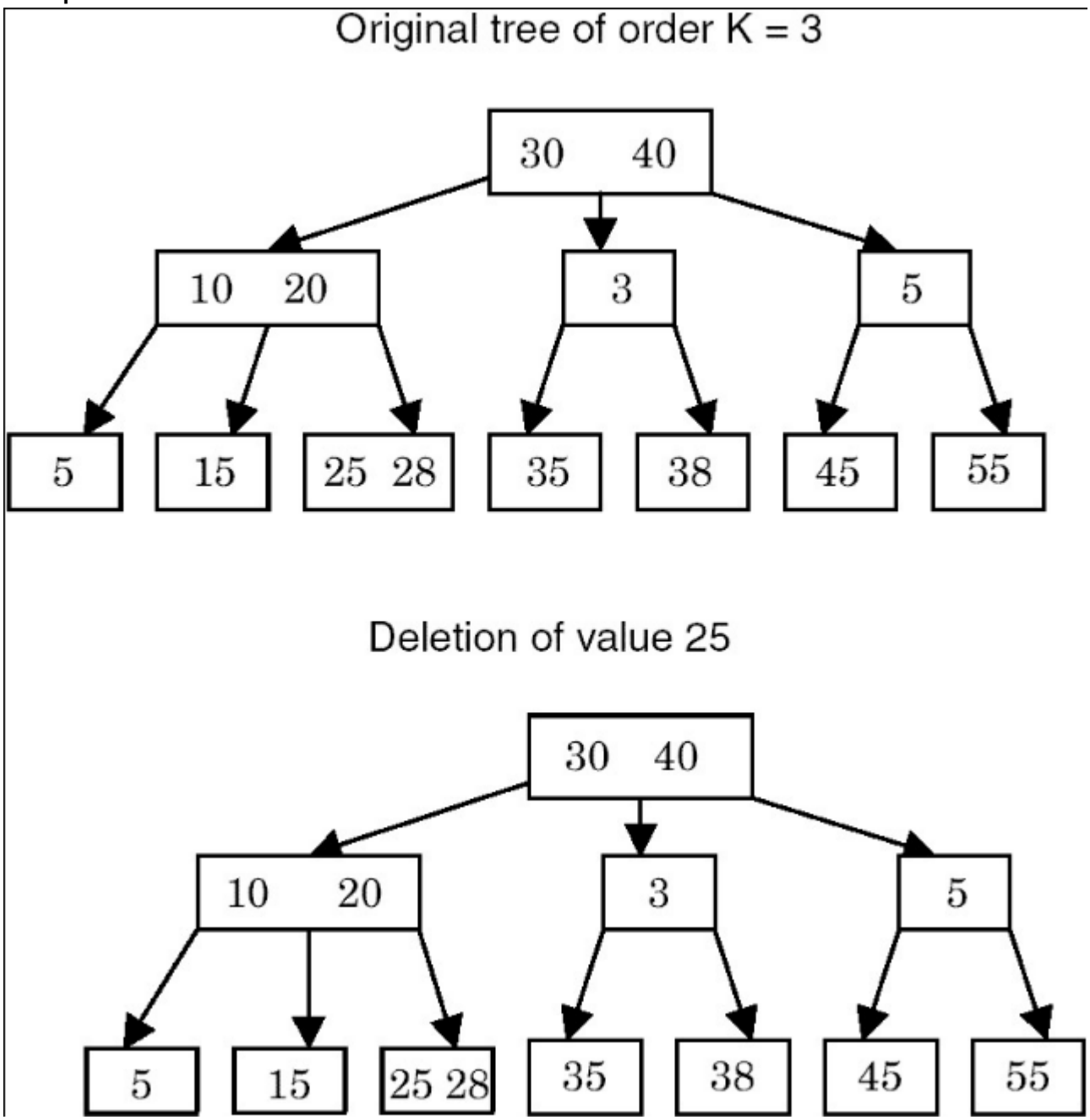

ABC Amber CHM Converter Trial version, http://www.processtext.com/abcchm.html

Deletion of value 35

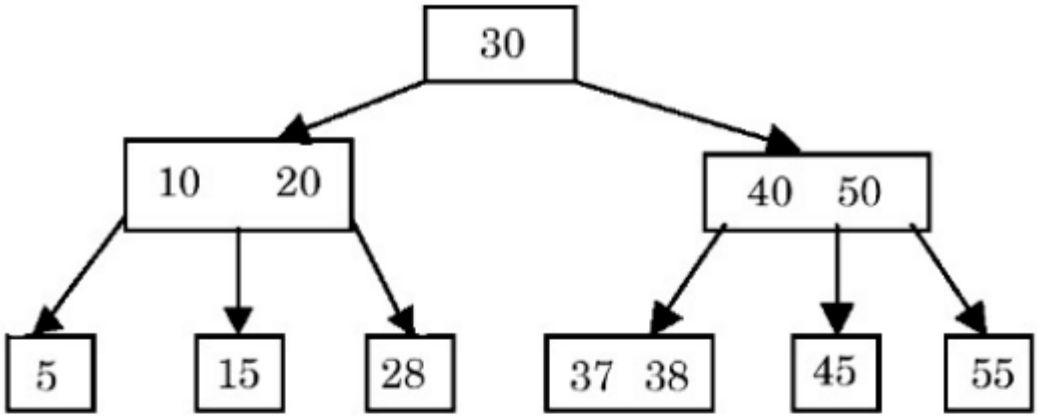

Deletion of value 30

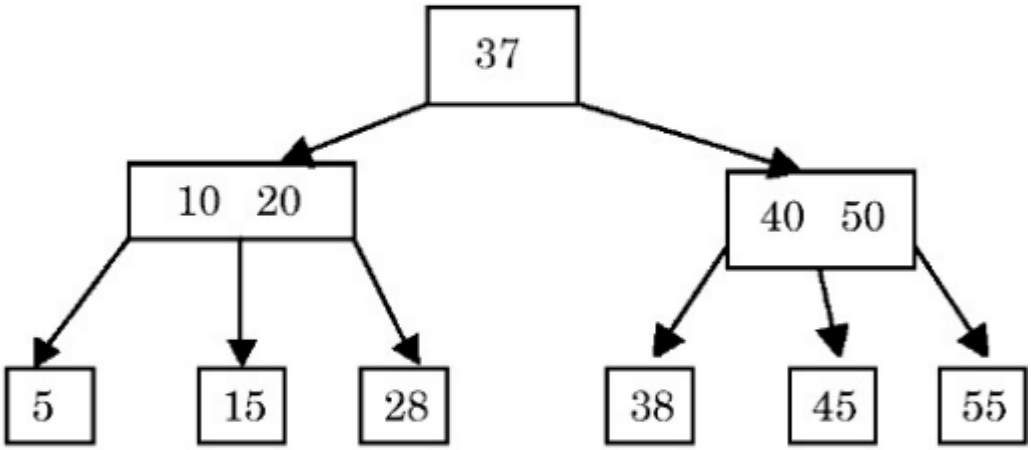

Deletion of value 37

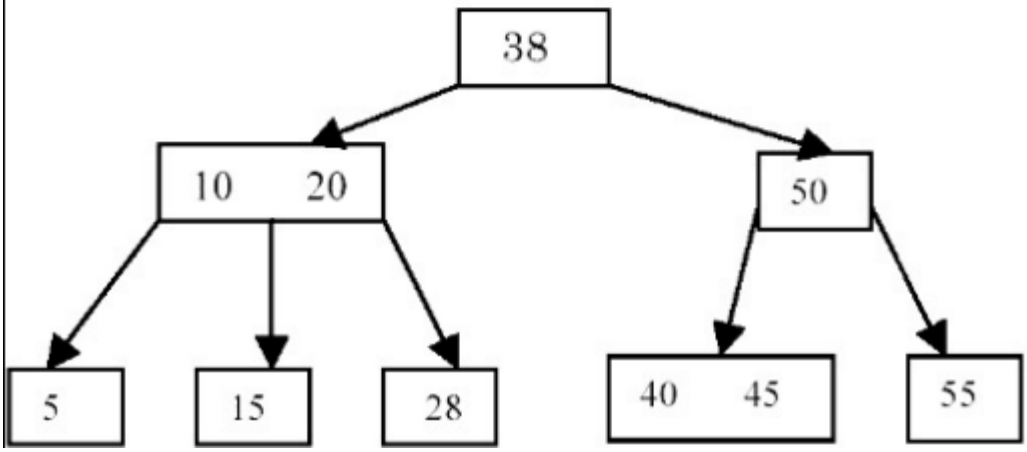

ABC Amber CHM Converter Trial version, http://www.processtext.com/abcchm.html

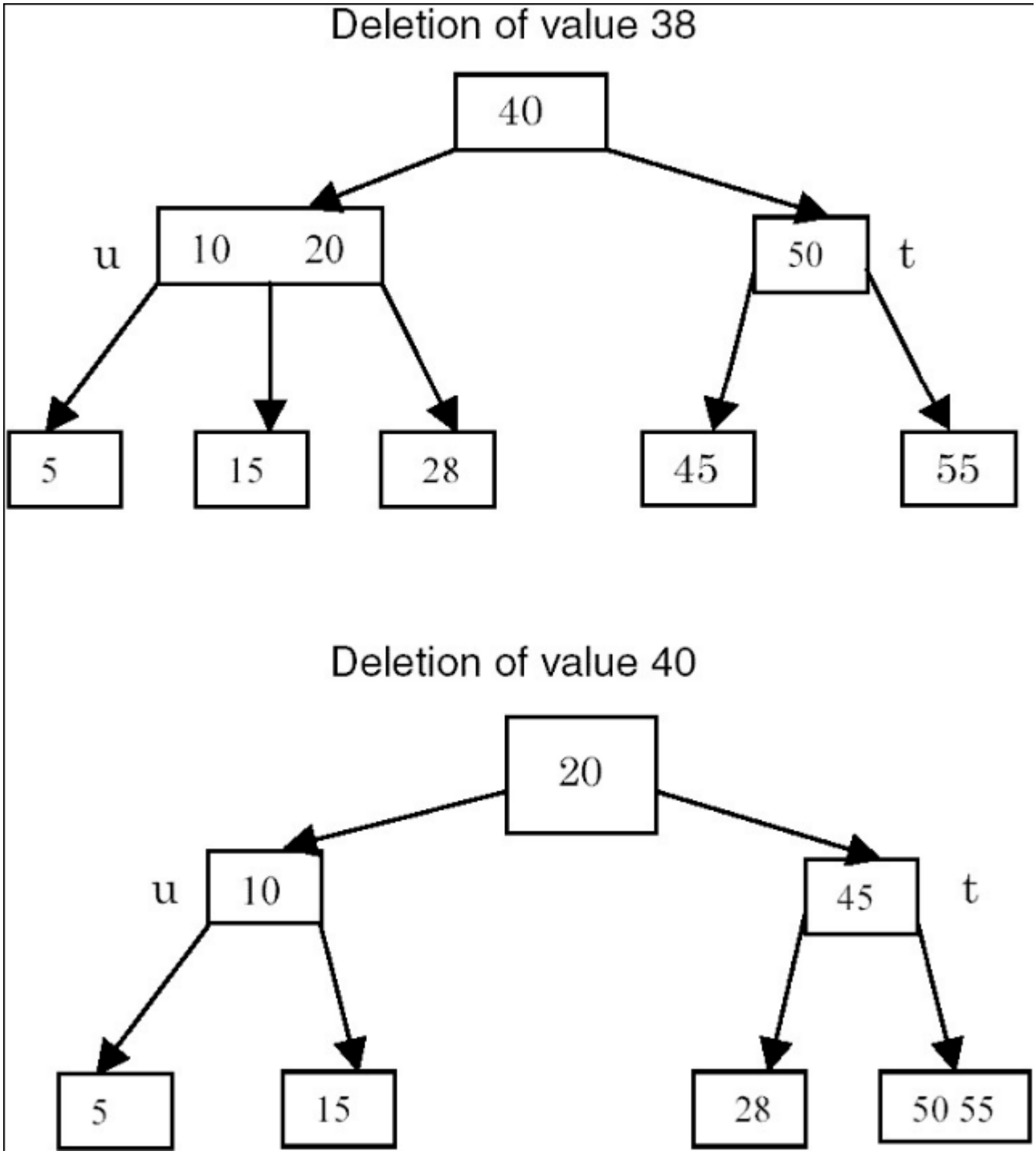

Note that in the deletion of value 40, since it is a non-leaf node, its next value in the search order, 45, is promoted to its place so that 45 appears in the root. Then 45 is deleted from the leaf node `r`. After deletion, `r` has less than K/2 values. So its sibling `s` is checked for any extra values. `s`, with a value of 55, has only K/2 values. So the values of `r`, `s`, and 50 (the value of the parent node t between the two children) are combined to get a node with the values (50, 55). Now t contains less than K/2 values. Since it is a non-leaf node, it checks its adjacent node to see if it has more than K/2 values. The node `u`, with the values (10, 20), actually has more than K/2 values. So the last value of `u`, 20, is promoted to the root and the value 45 is demoted to `t`. The rightmost sibling of `u` (the node containing a value of 28) becomes the leftmost sibling of `t`. 20, the rightmost sibling of `u`, becomes the leftmost sibling of `t`. A symetric transformation is done when the adjacent node appears in the right. If none of the adjacent nodes of t contain any extra values, then `t`, `u`, and the value in their parent node between these two pointers are combined to form one node. Then their parent node is checked to see if it has less than K/2 values, and the procedure continues.

13. The function hierarchy for insertion and deletion appears the same. For insertion, the main driver

function is `bInsert()`, which calls `insert()` and checks its return value to see whether the level was changed in the function. If it was, then `bMakeChanges()`, which propagates this change upwards in the tree is called. `insertVal()` is the function that puts a value (along with its right pointer) in a node. The function `getSplitNode()` splits a node in two parts, each containing K/2 values. The $(K+1)^{th}$ value in the node being split is stored in the first node as the $(K/2)^{th}$ value, which is then used in propagation. `insert()` is the main function that checks whether the node is a leaf or a non-leaf, and accordingly calls the different functions that have jsut been described.

For deletion, the main driver function is `bDelete()`, which calls itself recursively until it reaches a node that contains the value being deleted. It then calls `delete()`, which checks for the node to be a leaf or a non-leaf node and takes appropriate action as just described.

During insertion, `bApplyChanges()` is called from `bDelete()` and `delete()`. `bApplyChanges` is similar to `bMakeChanges`, and does the job of demotion and propagation of values in the current node and its siblings. It uses a function called `getAdjTree()`, which returns a node adjacent to a node with the same parent. `combineNodes()`, a procedure complementary to `getSplitNode()`, combines the second node with the first. In order to get the next value in the search order from the tree, the function `getNextVal()` is called. `deleteVal()` is a function that is complementary to the function `insertVal()`, and is used to delete a value, along with its right pointer, from a node. It then returns the pointer.

14. The procedure `bPrintFormatted()` uses a queue to print the tree in the breadth-first manner.

Points to Remember

1. In a B-tree of order K, there can be at most K pointers in a node and K – 1 values.
2. All the leaf nodes of a B-tree are at the same level.
3. The complexity of both insertion and deletion is O(*h*), where *h* is the height of the B-tree. This is because of the propagation of values upwards during insertion and downwards during deletion.
4. By writing the functions of insertion and deletion in a similar manner, the code becomes easier to write and understand.
5. A queue is required for printing a tree in the breadth-first format.
6. Searching for a value inside a node can be done using binary search as the values are sorted. However, if K is small enough, even the linear search will give a similar performance.

Previous Next

ABC Amber CHM Converter Trial version, http://www.processtext.com/abcchm.html

PROBLEM: IMPLEMENTATION OF A B+ TREE

Write procedures for insertion and deletion in a B+ tree.

Program

```
/********************** bplus.q.c *************************/
#include <malloc.h>
#include <stdlib.h>

typedef struct qnode qnode;
typedef btree qtype;
typedef struct {
   qnode *front;
   qnode *rear;
} queue;

struct qnode {
    qtype op;
    qnode *next;
};
bool qEmpty( queue *q ) {
   return (q->front == NULL);
}

void qPush( queue *q, qtype op ) {
   /*
    * pushes op at q.rear.
    */
    qnode *ptr = (qnode *)malloc( sizeof(qnode) );
    ptr->op = op;
    ptr->next = NULL;
    if( qEmpty(q) ) // first element in q.
        q->front = ptr;
    else
        q->rear->next = ptr;
    q->rear = ptr;
}

qtype qPop( queue *q ) {
    /*
     * pops op from q->front.
     */
     qnode *ptr = q->front;
```

ABC Amber CHM Converter Trial version, http://www.processtext.com/abcchm.html

```
     qtype op;

     if( qEmpty(q) )
         return (qtype)-1;
     q->front = q->front->next;
     if( qEmpty(q) )
         q->rear = NULL;

     op = ptr->op;
     free(ptr);

     return op;
}

/************************* bplus.c *************************/
#include <malloc.h>
#include <stdio.h>
#define K 5

typedef struct node node;
typedef int type;
typedef node *btree;
typedef enum {FALSE, TRUE} bool;

#include "bplusq.c"

struct node {
    type val[K];        // data in the node.
// actually first K-1 vals are valid. Kth entry is used
                        // during breaking of the node.
    btree ptr[K+1];     // pointers to other nodes in the node.
// one extra ptr to be used in some loops.
   int nptr;            // no of pointers in the node = non-null ptrs.
   // this can also be used to see whether a node is a leaf.
   int nval;            // no of values in the node.
  // this is reqd even when nptr is present: for leaf nodes.
  // for non-leaf nodes: nptr = nval+1.
  // for leaf nodes: nptr = 0.
  node *right;        // if this is a leaf node, this points to its sibling.
};

btree bNew() {
     /*
      * returns a new initialized node.
```

ABC Amber CHM Converter Trial version, http://www.processtext.com/abcchm.html

```
      */
      btree tree = (btree)malloc(sizeof(node));
      tree->nval = tree->nptr = 0;
      tree->right = NULL;
      return tree;
}

void insertVal(btree tree, type val, btree ptr) {
   /*
    * insert (val, ptr) in node pointed to by tree without any checks.
    */
    int i, j;

    for(i=0; i<tree->nval && tree->val[i]<val; ++i) ;
// since K is usually < 10,dont use binsrch.

// the val should be inserted at tree->val[i].
// shift-next the next values by one position.
    for(j=tree->nval-1; j>=i; --j) {
        tree->val[j+1] = tree->val[j];
        tree->ptr[j+2] = tree->ptr[j+1];
    }
    // insert val now at i.
    tree->val[i] = val;
    tree->nval++;
    tree->ptr[i+1] = ptr;
    if(ptr != NULL) // tree is NOT a leaf.
         tree->nptr++;
    printf("\tval %d inserted at position %d, tree->nptr=%d tree-
>nval=%d.\n", val, i, tree->nptr, tree->nval);
}

btree getSplitNode(btree tree) {
    /*
     * returns a new node containing vals and pointers from tree.
     */
    int i, j;
     btree ptr = bNew();

    // copy vals.
    for(i=(K-1)/2+1, j=0; i<K; ++i, ++j)
        ptr->val[j] = tree->val[i];
    ptr->nval = K/2;
    if(tree->nptr > 0) // non-leaf node.
```

ABC Amber CHM Converter Trial version, http://www.processtext.com/abcchm.html

```
    tree->nval = K-K/2-1; // temporarily this node contains an extra val.
    else             // leaf node.
         tree->nval = K-K/2;

    // copy ptrs.
    //for(i=(K-1)/2, j=0; i<=K; ++i, ++j)
    for(i=(K-1)/2+1, j=0; i<=K; ++i, ++j)
        ptr->ptr[j] = tree->ptr[i];
    if(tree->nptr > 0) {    // non-leaf nodes.
         ptr->nptr = K/2+1;
         tree->nptr = K-K/2;
    }
    else {       // leaf nodes.
         tree->nptr = ptr->nptr = 0;
         tree->right = ptr;          // bplus tree: list of leaves.
    }
    return ptr;
}

btree bMakeChanges(btree tree, btree ptr, btree parent) {
   /*
    * last val of tree should be inserted in parent.
    * if parent == NULL, then tree was root.
    * tree = parent->ptr[i] if parent is NOT NULL.
    */
    // extract the last value from tree.
    type val = (tree->nptr>0 ? tree->val[tree->nval] : tree->val[tree-
>nval-1]);
    printf("in bMakeChanges().\n");

    if(parent == NULL) {
          parent = bNew();
         parent->ptr[0] = tree;
         parent->nptr = 1;
    }
    if(parent->nval < K-1) { // parent has space.
        insertVal(parent, val, ptr);
    }
    else {                        // parent full.
         printf("parent is full.\n");
         insertVal(parent, val, ptr);
         return getSplitNode(parent);
    }
    return parent;
```

ABC Amber CHM Converter Trial version, http://www.processtext.com/abcchm.html

```
}

btree bInsert(btree tree, type val) {
   /*
    * calls insert to insert val in tree.
    * if the return node is diff from tree, that means a new node has
    * been created. This calls bMakeChanges().
    */
   btree insert(btree tree, type val);

   btree ptr = insert(tree, val);
   if(ptr != tree) // node was split.
       return bMakeChanges(tree, ptr, NULL);
   return tree;
}

btree insert(btree tree, type val) {
   /*
    * inserts val in tree.
    * returns tree if there is no change.
    * if there is creation of a new node then the new node is returned.
    */
   int i;
   btree ptr;

   if(tree->nptr > 0) {    // non-leaf.
         for(i=0; i<tree->nval && tree->val[i]<val; ++i);
// since K is usually < 10, even sequential search is fine.

// the val should be in a tree pointed to by tree->ptr[i].

         printf("\tval should be inserted in tree->ptr[%d].\n", i);
         ptr = insert(tree->ptr[i], val);
         if(ptr != tree->ptr[i])
            return bMakeChanges(tree->ptr[i], ptr, tree);
         return tree;
   }
   else { // tree is a leaf.
        if(tree->nval < K-1) { // space is available in the leaf.
             insertVal(tree, val, NULL);
             return tree;
        }
        else {       // leaf full!
            printf("\tleaf is full.\n");
```

ABC Amber CHM Converter Trial version, http://www.processtext.com/abcchm.html

```
            insertVal(tree, val, NULL);
            // now break the leaf node.
            return getSplitNode(tree);
        }
    }
}
    tree = bInsert(tree, 6);
    tree = bInsert(tree, 7);
    tree = bInsert(tree, 8);
    tree = bInsert(tree, 9);
    tree = bInsert(tree, 10);
    tree = bInsert(tree, 11);
    tree = bInsert(tree, 12);
    tree = bInsert(tree, 13);
    tree = bInsert(tree, 14);
    tree = bInsert(tree, 15);
    tree = bInsert(tree, 16);
    tree = bInsert(tree, 17);
    bPrintFormatted(tree);

    tree = bDelete(tree, 6, NULL, -320);
    bPrintFormatted(tree);
    tree = bDelete(tree, 5, NULL, -320);
    bPrintFormatted(tree);
    tree = bDelete(tree, 7, NULL, -320);
    bPrintFormatted(tree);
    tree = bDelete(tree, 8, NULL, -320);
    bPrintFormatted(tree);
    tree = bDelete(tree, 9, NULL, -320);
    bPrintFormatted(tree);
    tree = bDelete(tree, 10, NULL, -320);
    bPrintFormatted(tree);
    tree = bDelete(tree, 11, NULL, -320);
    bPrintFormatted(tree);

    printf("The linked list of leaf nodes:\n");
    for(; ptr; ptr=ptr->right) {
        for(i=0; i<ptr->nval; ++i)
            printf("%d-", ptr->val[i]);
        printf(" ");
    }
    printf("\n");
    return 0;
}
```

ABC Amber CHM Converter Trial version, http://www.processtext.com/abcchm.html

Explanation

1. A B+ tree of order K is a K-way search tree that is either empty or is of height > 0 and satisfies the following properties:
   a. The root node has at least two children.
   b. All nodes other than the root node and leaf nodes have at least ceil(K/2) children.
   c. All leaf nodes are at the same level.
   d. All values appear in the leaf nodes.
   e. The leaf nodes are linked from left to right.
2. Each B+ tree node of order K has space for K pointers and K – 1 values. We maintain extra space for one pointer and one value, which will be useful in insertion. We maintain counts of the number of values and the number of pointers present in the node. For the linked list of leaf nodes, another pointer is needed. Thus the node structure for a B+ tree is as follows:
3.
4. `typedef struct node *btree;`
5. `struct node {`
6. `  type val[K];`
7. `  btree ptr[K+1];`
8. `  int nptr;`
9. `  int nval;`
10. `  node *right;`
11. `};`

`nptr` is the number of non-null pointers and `nval` is the number of valid values in a node. For a leaf node, `nptr == 0` while for all other nodes, `nptr == nval + 1`. The pointer right points to the node to the right of this node.

12. Insertion in a B+ tree takes place by traversing the search tree for the value starting from the root. The search always terminates in a leaf node. The value is inserted in the leaf node. The node is then checked to see if it has more than K–1 values. If the node has less than K values, the insertion is performed. Otherwise, the node is split into two nodes of sizes floor(K/2) and the middle value is 'copied' into the parent node. In case of a non-leaf node, the middle value is ' moved' to the parent node. This procedure is repeated until either the insertion stops (as there is space for the new value in a node) or nodes at all the levels in the tree get split, and finally a new root node needs to be created. The value propagated from the original root is then put into the new root node and its pointers are adjusted accordingly.

Examples:

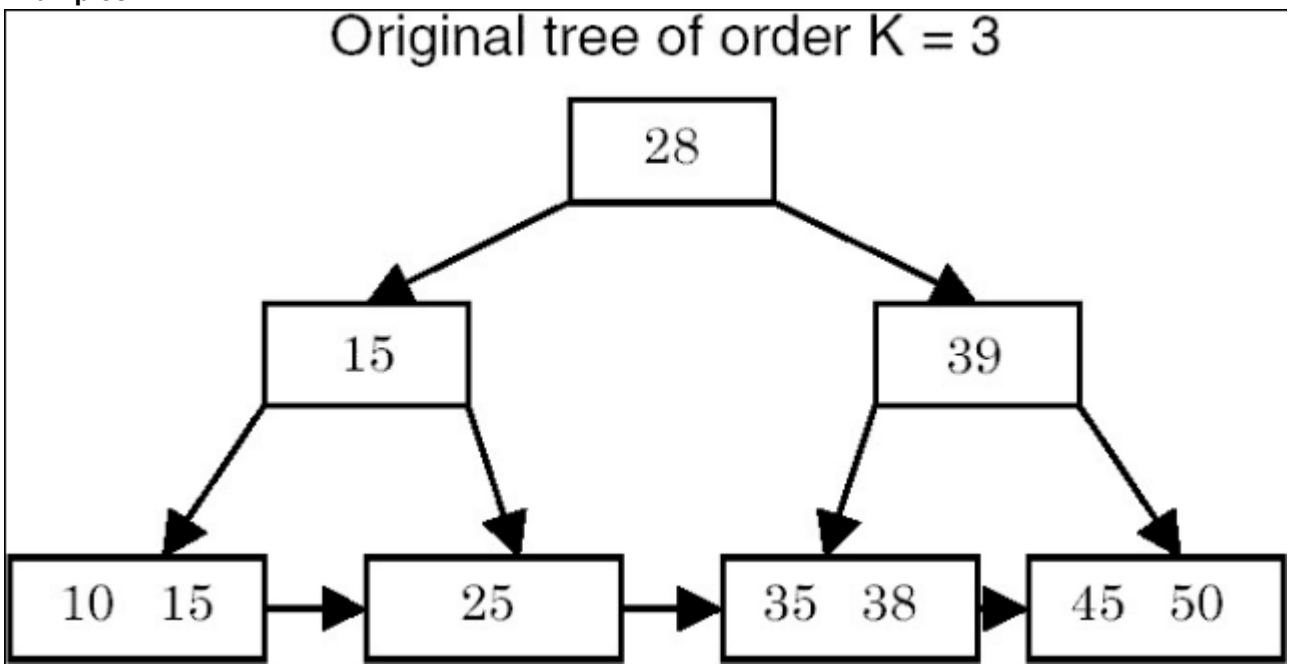

Note that for a value `v` in a node and its two adjacent pointers on left and right, all values on left are £ `v` and all values on right are > `v`.

ABC Amber CHM Converter Trial version, http://www.processtext.com/abcchm.html

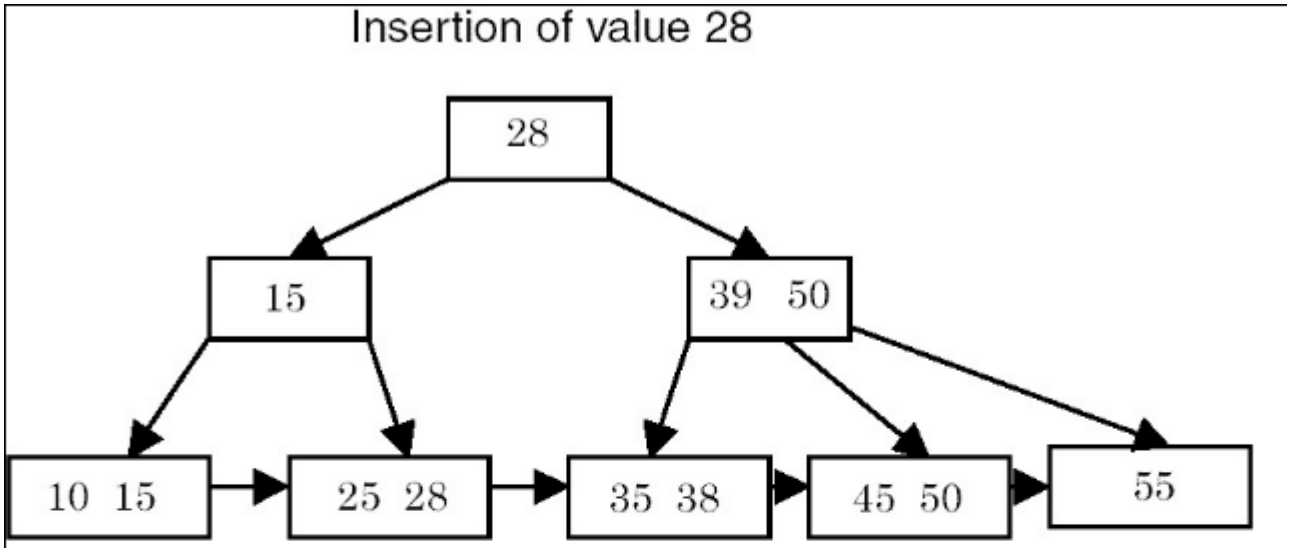

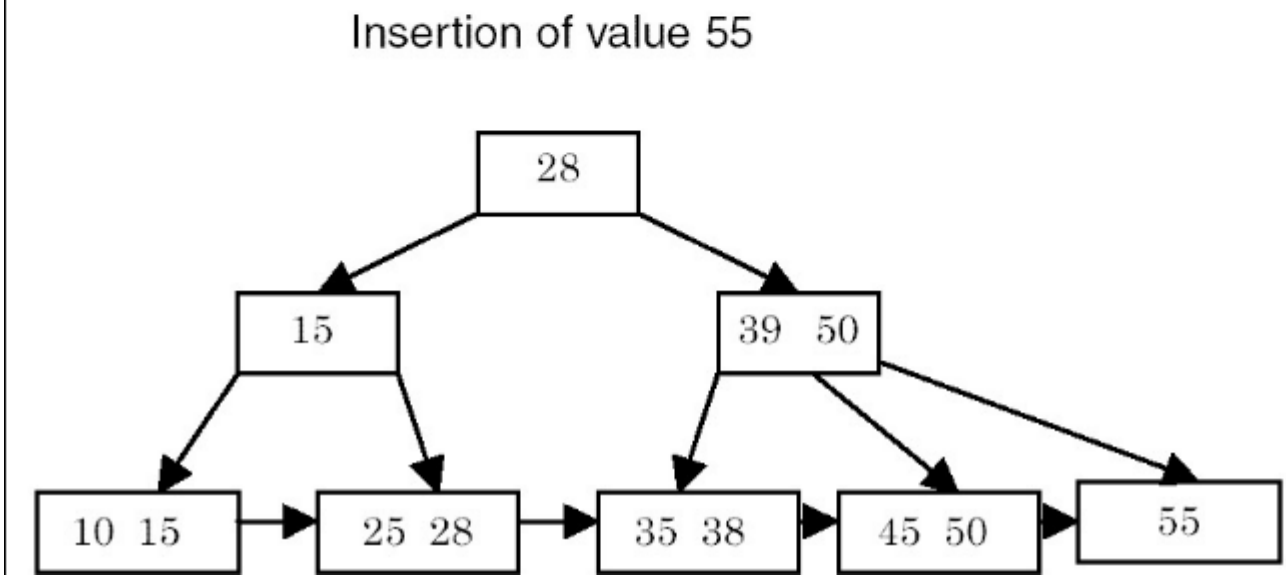

ABC Amber CHM Converter Trial version, http://www.processtext.com/abcchm.html

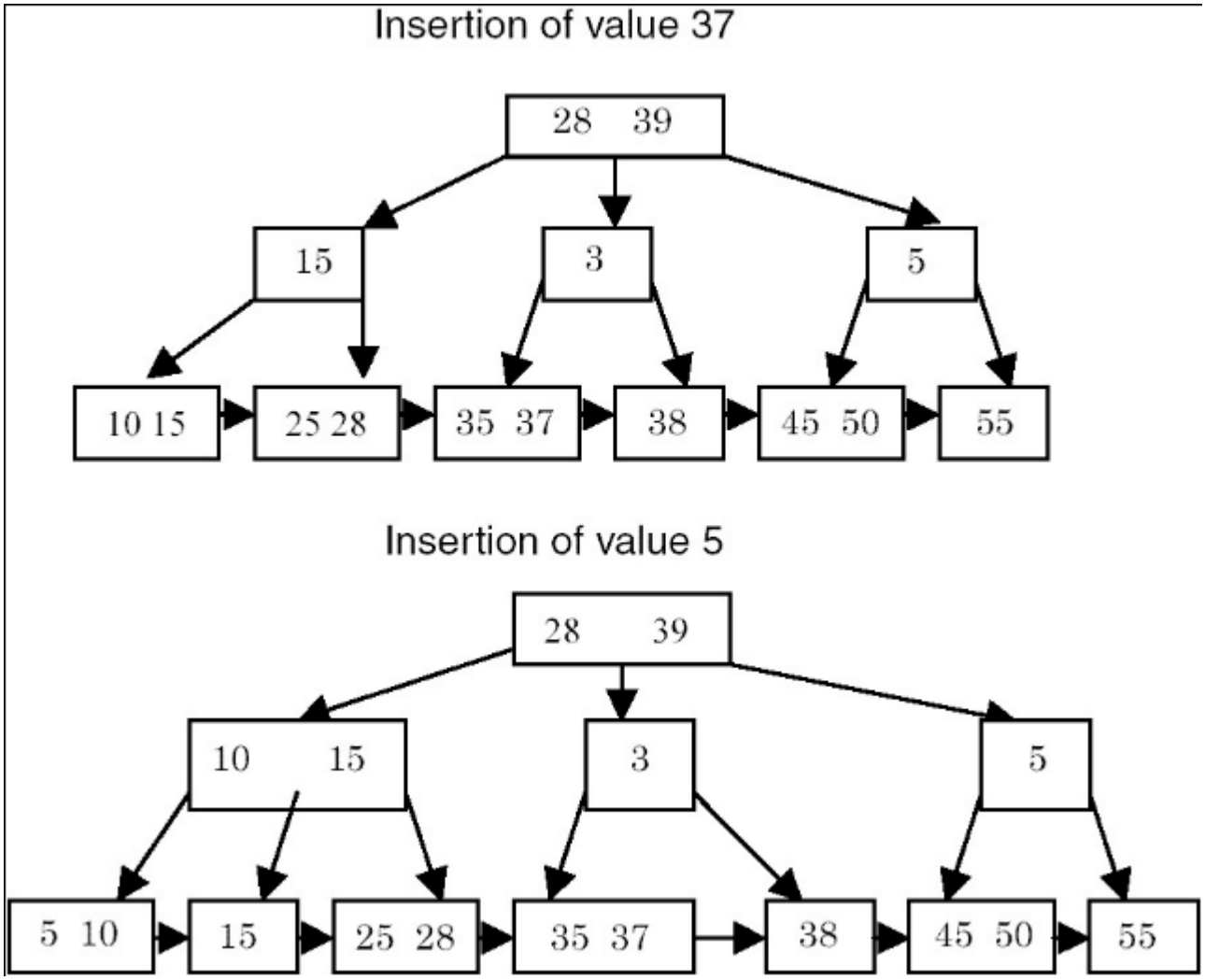

13. Deletion of a value from a B+ tree can be done as simply as insertion is done. If, even after deletion of the value from a leaf node `p`, the node contains >= K/2 values, then nothing needs to be done. Otherwise the sibling nodes are checked for > K/2 values. If such a sibling `q` exists, then the adjacent value in `q` is moved to the node `p` and the value in the parent node between the two leaf nodes is replaced by the last value in its left child. If such a sibling `q` does not exist, then nodes `p` and `q` are combined, and the value in the parent node between these two leaf nodes is deleted. If in this process, the parent node `r` contains less than K/2 values, then its adjacent node `s` is promoted to its parent `t` and the value in `t` is demoted to `r`. Also, the adjacent pointer to the value promoted from `s` becomes the adjacent pointer to the parent value newly inserted in `r`.

Examples

ABC Amber CHM Converter Trial version, http://www.processtext.com/abcchm.html

Original tree of order K = 3

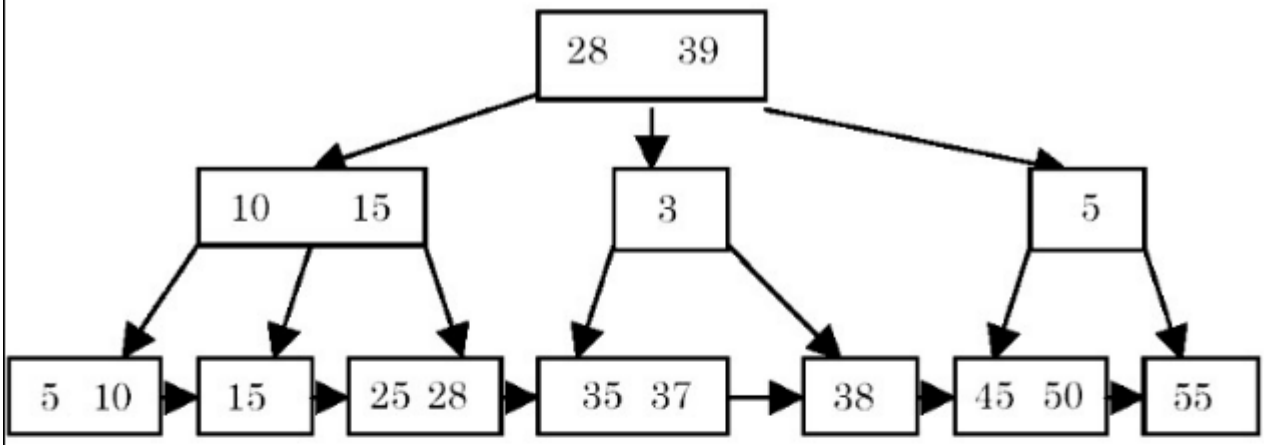

Deletion of value 25

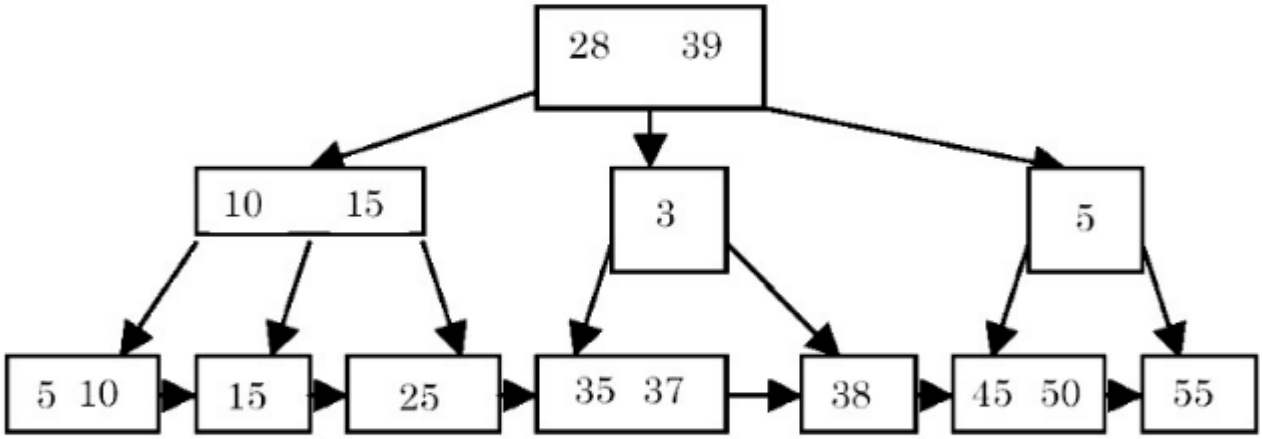

Deletion of value 35

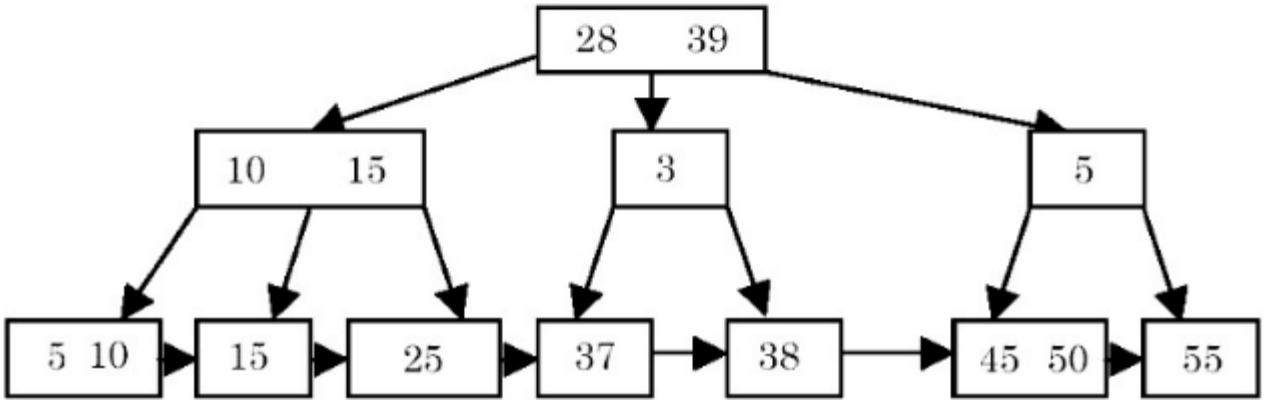

ABC Amber CHM Converter Trial version, http://www.processtext.com/abcchm.html

Deletion of value 37

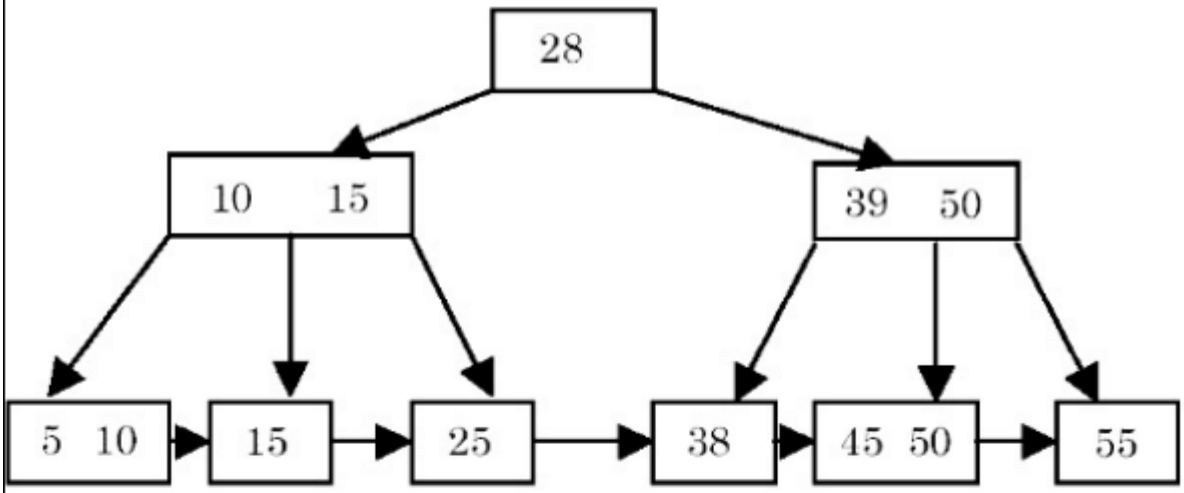

Deletion of value 38

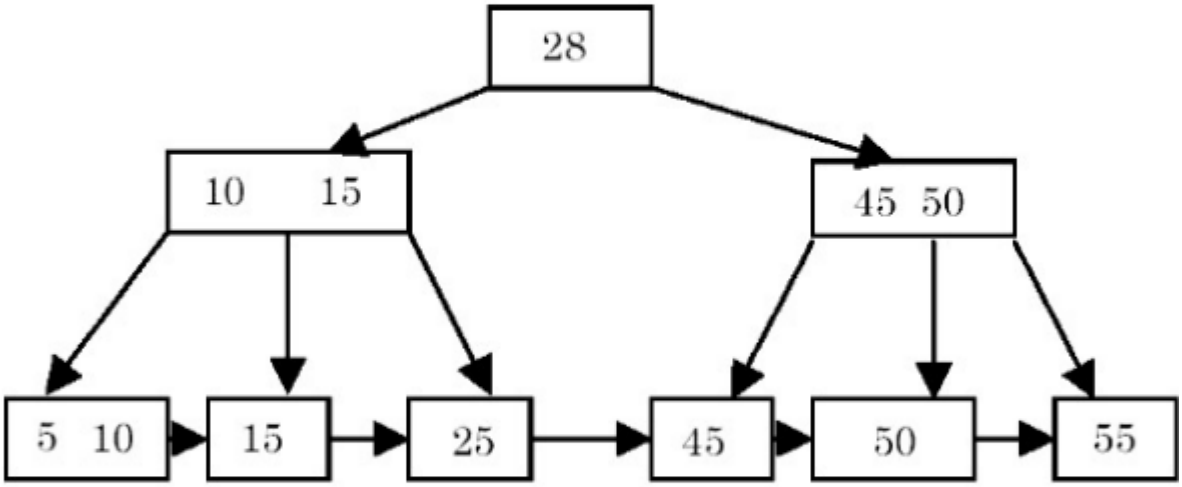

Deletion of value 50

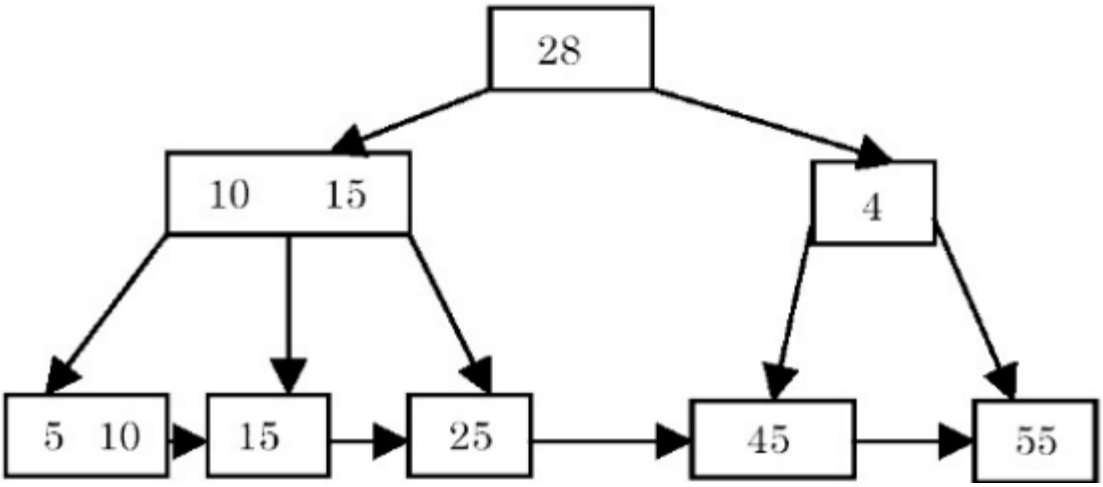

ABC Amber CHM Converter Trial version, http://www.processtext.com/abcchm.html

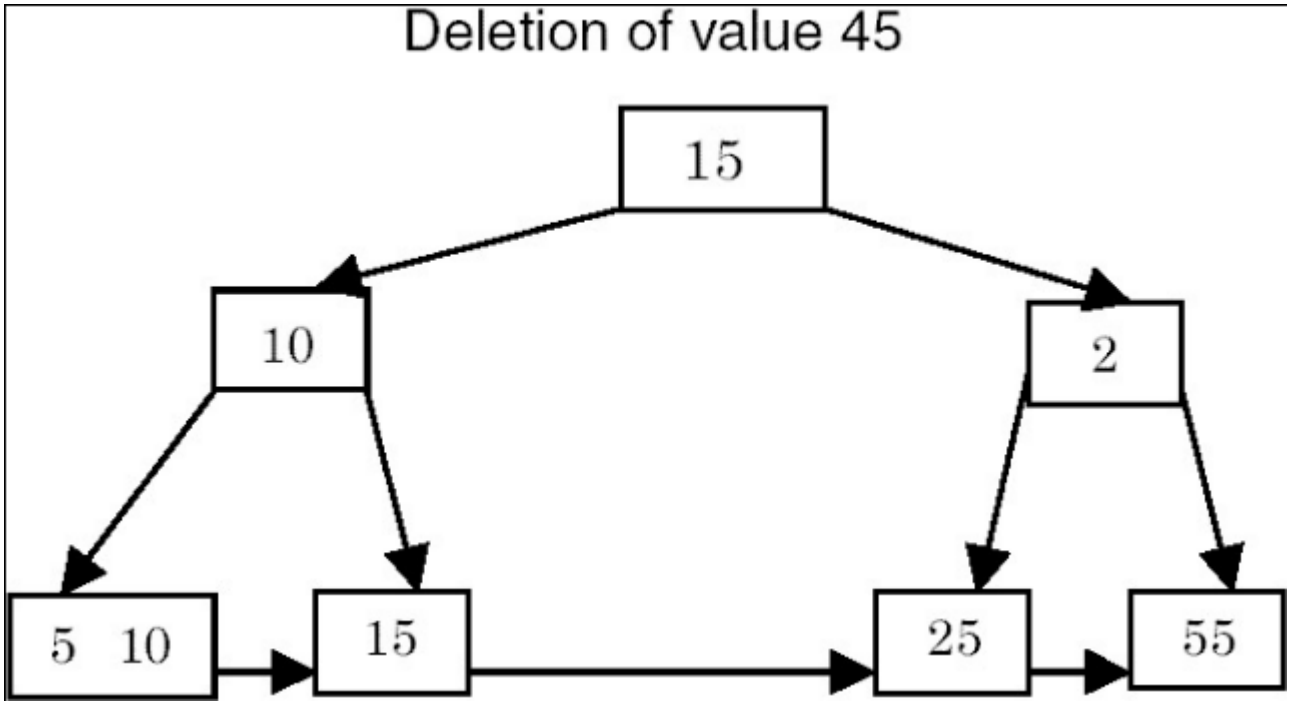

Note that the value 45 is deleted from the leaf node r. After deletion, `r` has less than K/2 values. So its sibling s is checked for any extra values. `s`, with a value of 55, has only K/2 values. So the values of `r`, `s`, and 50 (the value of the parent node `t` between the two children), are combined to get a node with the value 55, and the value 45 is deleted from `t`, along with its right pointer. `r's` right pointer is appropriately updated. Now t contains less than K/2 values. Since it is a non-leaf node, it checks its adjacent node to see if it has more than K/2 values. The node `u`, with the values (10, 15) actually has more than K/2 values. So the last value of `u`, 15, is promoted to the root and the value 28 is demoted to `t`. The rightmost sibling of `u` (the node containing a value of 25) becomes the leftmost sibling of `t`. A symmetric transformation is done when the adjacent node appears in the right. If none of the adjacent nodes of `t` contain any extra values, then the values of `r`, `u`, and the value in their parent node between these two pointers are combined to form one node. Then their parent node is checked to see if it has less than K/2 values, and the procedure continues.

14. The function hierarchy for insertion and deletion appears the same. For insertion, the main driver function is `bInsert()`, which calls `insert()` and checks its return value to see whether the level was changed in the function. If it was, `bMakeChanges()` is called, which propagates this change upwards in the tree. `insertVal()` is the function that puts a value (along with its right pointer) in a node. The function `getSplitNode()` splits a node in two parts, each containing K/2 values. The $(K+1)^{th}$ value in the node being split is stored in the first node as the $(K/2)^{th}$ value, which is then used in propagation. `insert()` is the main function that checks whether the node is a leaf or a non-leaf and accordingly calls the different functions that have just been described.

For deletion, the main driver function is `bDelete()`, which calls itself recursively until it reaches the leaf node that contains the value being deleted. It then calls `delete()`, which takes appropriate action as just described. During insertion, `bApplyChanges()` is called from `bDelete()` and `delete()`. `bApplyChanges` is similar to `bMakeChanges`, and does the job of demotion and propagation of values in the current node and its siblings. It uses a function called `getAdjTree()`, which returns a node adjacent to a node with the same parent. `combineNodes()`, a procedure complementary to `getSplitNode()`, combines the second node with the first. In order to get the next value in the search order from the tree, the function `getNextVal()` is called. `deleteval()` is a function that is complementary to the function `insertVal()`, and is used to delete a value, along with its right pointer, from a node. It then returns the pointer.

15. The procedure `bPrintFormatted()` uses a queue to print the tree in the breadth-first manner.

Points to Remember

1. In a B+ tree of order K, there can be at most K pointers in a node and K–1 values.
2. All the leaf nodes of a B+ tree are at the same level.

ABC Amber CHM Converter Trial version, http://www.processtext.com/abcchm.html

3. All the inserted values in a B+ tree are present in leaf nodes. The non-leaf nodes may contain values that are not present in leaf nodes.
4. The complexity of both insertion and deletion is O(*h*), where *h* is the height of the B-tree. This is because of the propagation of values upwards during insertion and downwards during deletion.
5. A queue is required for printing a tree in the breadth-first format.
6. Searching for a value inside a node can be done using binary search as the values are sorted. However, if K is small enough, even the linear search will give a similar performance.
7. The updation of a value can be simulated by deletion followed by insertion.

Previous Next

ABC Amber CHM Converter Trial version, http://www.processtext.com/abcchm.html

Chapter 28: Problems in Graphs

PROBLEM: THE DFS METHOD FOR GRAPH TRAVERSAL

Write a function `dfs(v)` to traverse a graph in a depth-first manner starting from vertex `v`. Use this function to find connected components in the graph. Modify `dfs()` to produce a list of newly visited vertices. The graph is represented as an adjacency matrix.

Program

```
#include <stdio.h>

#define MAXVERTICES 20
#define MAXEDGES    20

typedef enum {FALSE, TRUE, TRISTATE} bool;

struct graph {
    int matrix[MAXVERTICES][MAXEDGES];
    int vertices, edges;
    }graph;

void buildINC( int edges[][MAXEDGES], int nedges ) {
    /*
     * fills graph.matrix with information from edges.
     * graph.edges = nedges.
     * graph.vertices is maxEntry in edges.
     */
     int i, j;

     graph.vertices = -1;
     graph.edges = nedges;
    // init matrix to FALSE.
    for( i=0; i<MAXVERTICES; ++i )
        for( j=0; j<MAXEDGES; ++j )
               graph.matrix[i][j] = FALSE;

    // now enter values into it.
    for( i=0; i<2; ++i )
        for( j=0; j<nedges; ++j ) {
               graph.matrix[ edges[i][j] ][j] = TRUE;
               if( edges[i][j] > graph.vertices )
                     graph.vertices = edges[i][j];
        }
```

ABC Amber CHM Converter Trial version, http://www.processtext.com/abcchm.html

```
    graph.vertices++;        // no of vertices = maxvertes + 1;
}

void printINC() {
    /*
     * prints graph.
     */
     int i, j;
     for( i=0; i<graph.vertices; ++i ) {
         for( j=0; j<graph.edges; ++j )
                printf( "%d ", graph.matrix[i][j] );
         printf( "\n" );
     }
     printf( "\n" );
}

int getOtherVertex( int edge, int v ) {
    /*
    * returns vertex at the other end of edge whose one vertex is v.
    */
    int i;

    for( i=0; i<graph.vertices; ++i )
        if( i != v && graph.matrix[i][edge] == TRUE )
                return i;
    printf( "getOtherVertex(): This should not be printed.\n" );
    return -1;
}
int getAdj( int v, int *adjv ) {
    /*
     * using graph, finds adj nodes of v and stores them in adjv.
     * returns no of such adj vertices.
     */
    int j;
    int *adjvptr = adjv;

    for( j=0; j<graph.edges; ++j )
        if( graph.matrix[v][j] == TRUE )
                *adjvptr++ = getOtherVertex( j, v );
    return adjvptr-adjv;
}

void dfs( int v, int *visited ) {
    /*
```

ABC Amber CHM Converter Trial version, http://www.processtext.com/abcchm.html

```
     * recursively traverse graph from v using visited.
     * and mark all the vertices that come in dfs path to TRISTATE.
     */
    int adjv[ MAXVERTICES ];
    int i;

    visited[v] = TRISTATE;

    for( i=getAdj(v,adjv)-1; i>=0; -i )
        if( visited[ adjv[i] ] == FALSE )
               dfs( adjv[i], visited );
}

void printSetTristate( int *visited ) {
    /*
     * prints all vertices of visited which are TRISTATE.
     * and set them to TRUE.
     */
    int i;

    for( i=0; i<graph.vertices; ++i )
        if( visited[i] == TRISTATE ) {
               printf( "%d ", i );
               visited[i] = TRUE;
        }
    printf( "\n\n" );
}

void compINC() {
    /*
     * prints all connected components of graph represented using INC.
     */
    int *visited;
    int i;

    visited = (int *)malloc( graph.vertices );
    for( i=0; i<graph.vertices; ++i )
        visited[i] = FALSE;

    for( i=0; i<graph.vertices; ++i )
        if( visited[i] == FALSE ) {
               dfs( i, visited );
               // print all vertices which are TRISTATE.
               // and mark them to TRUE.
```

ABC Amber CHM Converter Trial version, http://www.processtext.com/abcchm.html

```
                printSetTristate( visited );
        }
    free( visited );
}

int main() {
    int edges[][MAXEDGES] = {       {0,2,4,5,5,4},
                                {1,1,3,4,6,6}
                        };
    buildINC( edges, 6 );
    printINC();
    compINC();

    return 0;
}
```

Explanation

1. The graph is represented as an incidence matrix. The rows correspond to each vertex and the columns correspond to each edge in the graph. An entry `matrix[i][j]` is `TRUE` if edge `j` contains vertex `i`, otherwise it is `FALSE`. For example, if the graph is as follows;

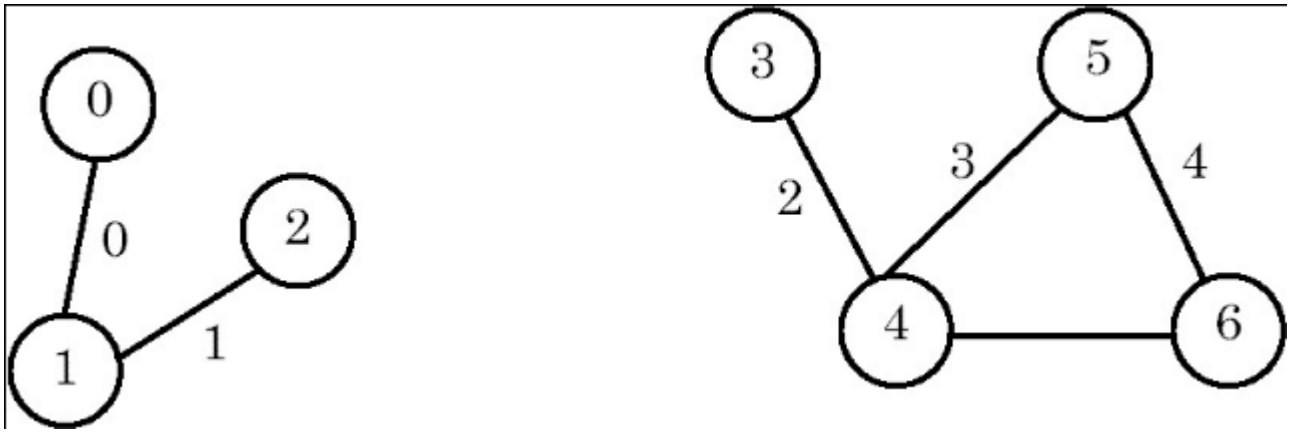

and the edges are numbered as shown, then the incidence matrix for the graph is as shown here:

ABC Amber CHM Converter Trial version, http://www.processtext.com/abcchm.html

	0	1	2	3	4	5
0	1	0	0	0	0	0
1	1	1	0	0	0	0
2	0	1	0	0	0	0
3	0	0	1	0	0	0
4	0	0	1	1	0	1
5	0	0	0	1	1	0
6	0	0	0	0	1	1

The rows of the incidence matrix are vertices and the columns are edges.

2. `dfs(v)` is implemented recursively. A Boolean vector `visited[]` is maintained, whose all entries are initially `FALSE`. `dfs(v)` marks `v` as visited by making `visited[v] = TRUE`. It then finds all the adjacent nodes of `v` and starts `dfs()` from those nodes which have not yet been visited.
3. `compINC()` is a function that finds all the connected components of a graph. It maintains a local copy of the vector `visited[]` and passes it as a parameter to `dfs(v)`. `compINC()` passes that vertex as a parameter to `dfs()`, which is not yet visited. Thus each invoking of `dfs()` finds one connected component of the graph.
4. In order to modify `dfs()` to produce a list of newly visited vertices, we tag the vertices visited using `dfs()` as `TRISTATE`. In `compINC()`, all these `TRISTATE` vertices will form one connected component. This status is then converted to `TRUE`. The next invocation of `dfs()` returns another set of vertices tagged as `TRISTATE`, which forms another connected component, and so on.

For example, in this graph, first all vertices are tagged as `FALSE`. After invoking `dfs(0)`, the vertices tagged as `TRISTATE` are {0, 1, 2}. These are output and their tags are changed from `TRISTATE` to `TRUE`. The next invoking of `dfs(3)` tags vertices {3, 4, 5, 6} as `TRISTATE`. These are then output and their tags are changed from `TRISTATE` to `TRUE`. Since there is no vertex remaining whose tag is `FALSE`, the algorithm stops.

Points to Remember

1. All the reachable vertices can be traversed from a source vertex by using the depth-first search.
2. The data representation (graph in this case) should be such that it should make algorithms operating on the data efficient.
3. Note how a simple recursive procedure solves the problem of finding all the reachable vertices from a vertex.
4. Note the use of descriptive words such as `FALSE`, `TRUE`, and `TRISTATE`, rather than integers 0, 1, and 2. It makes the program easily understandable.

Previous Next

ABC Amber CHM Converter Trial version, http://www.processtext.com/abcchm.html

PROBLEM: CONNECTED COMPONENTS IN A GRAPH

Write a function `dfs(v)` to traverse a graph in a depth-first manner starting from vertex `v`. Use this function to find connected components in the graph. Modify `dfs()` to produce a list of the newly visited vertices. The graph is represented as adjacency lists.

Program

```
#include <stdio.h>

#define MAXVERTICES 20
#define MAXEDGES    20

typedef enum {FALSE, TRUE, TRISTATE} bool;
typedef struct node node;

struct node {
    int dst;
    node *next;
};

void printGraph( node *graph[], int nvert ) {
    /*
     * prints the graph.
     */
    int i, j;

    for( i=0; i<nvert; ++i ) {
        node *ptr;
        for( ptr=graph[i]; ptr; ptr=ptr->next )
            printf( "[%d] ", ptr->dst );
        printf( "\n" );
    }
}

void insertEdge( node **ptr, int dst ) {
    /*
     * insert a new node at the start.
     */
    node *newnode = (node *)malloc( sizeof(node) );
    newnode->dst = dst;
    newnode->next = *ptr;
    *ptr = newnode;
}
```

ABC Amber CHM Converter Trial version, http://www.processtext.com/abcchm.html

```
void buildGraph( node *graph[], int edges[2][MAXEDGES], int nedges ) {
    /*
     * fills graph as adjacency list from array edges.
     */
    int i;
    for( i=0; i<nedges; ++i ) {
        insertEdge( graph+edges[0][i], edges[1][i] );
        insertEdge( graph+edges[1][i], edges[0][i] );   // undirected graph.
    }
}

void dfs( int v, int *visited, node *graph[] ) {
    /*
     * recursively traverse graph from v using visited.
     * and mark all the vertices that come in dfs path to TRISTATE.
     */
    node *ptr;

    visited[v] = TRISTATE;
    //printf( "%d \n", v );

    for( ptr=graph[v]; ptr; ptr=ptr->next )
        if( visited[ ptr->dst ] == FALSE )
            dfs( ptr->dst, visited, graph );
}

void printSetTristate( int *visited, int nvert ) {
    /*
     * prints all vertices of visited which are TRISTATE.
     * and set them to TRUE.
     */
    int i;

    for( i=0; i<nvert; ++i )
        if( visited[i] == TRISTATE ) {
            printf( "%d ", i );
            visited[i] = TRUE;
        }
    printf( "\n\n" );
}

void compINC(node *graph[], int nvert) {
    /*
```

ABC Amber CHM Converter Trial version, http://www.processtext.com/abcchm.html

```
     * prints all connected components of graph represented using INC lists.
     */
    int *visited;
    int i;

    visited = (int *)malloc( nvert*sizeof(int) );
    for( i=0; i<nvert; ++i )
        visited[i] = FALSE;

    for( i=0; i<nvert; ++i )
        if( visited[i] == FALSE ) {
            dfs( i, visited, graph );
            // print all vertices which are TRISTATE.
            // and mark them to TRUE.
            printSetTristate( visited, nvert );
        }
    free( visited );
}

int main() {
    int edges[][MAXEDGES] = { {0,2,4,5,5,4},
                              {1,1,3,4,6,6}
                            };
    int nvert = 7;      // no of vertices.
    int nedges = 6; // no of edges in the graph.
    node **graph = (node **)calloc( nvert, sizeof(node *) );

    buildGraph( graph, edges, nedges );
    printGraph( graph, nvert );
    compINC( graph, nvert );

    return 0;
}
```

Explanation

1. The graph is represented as adjacency lists. The graph contains an array of `n` pointers where `n` is the number of vertices in the graph. Each entry `i` in the array contains a list of vertices to which `i` is connected. For example, if the graph is as follows:

ABC Amber CHM Converter Trial version, http://www.processtext.com/abcchm.html

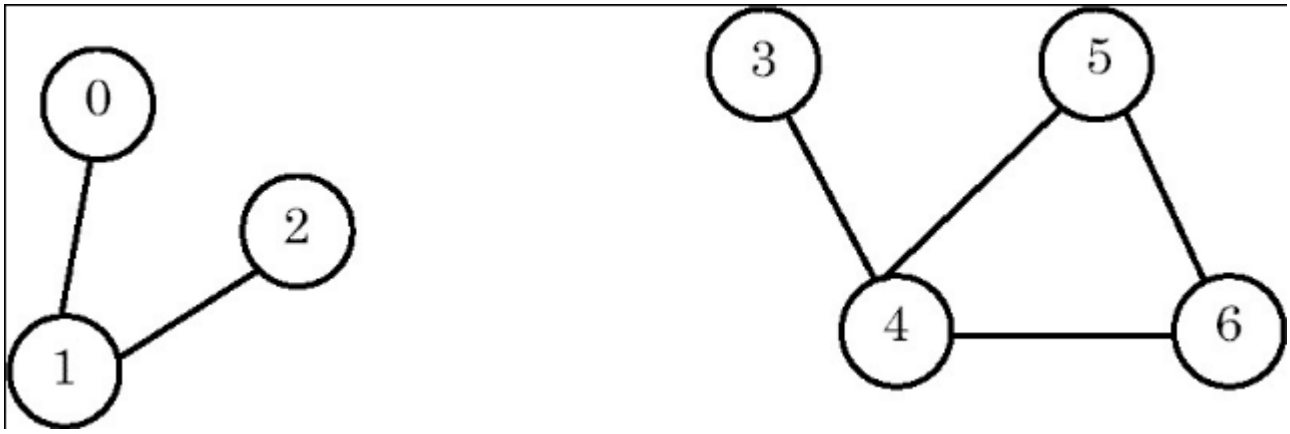

then the adjacency lists for the graph are as shown here:

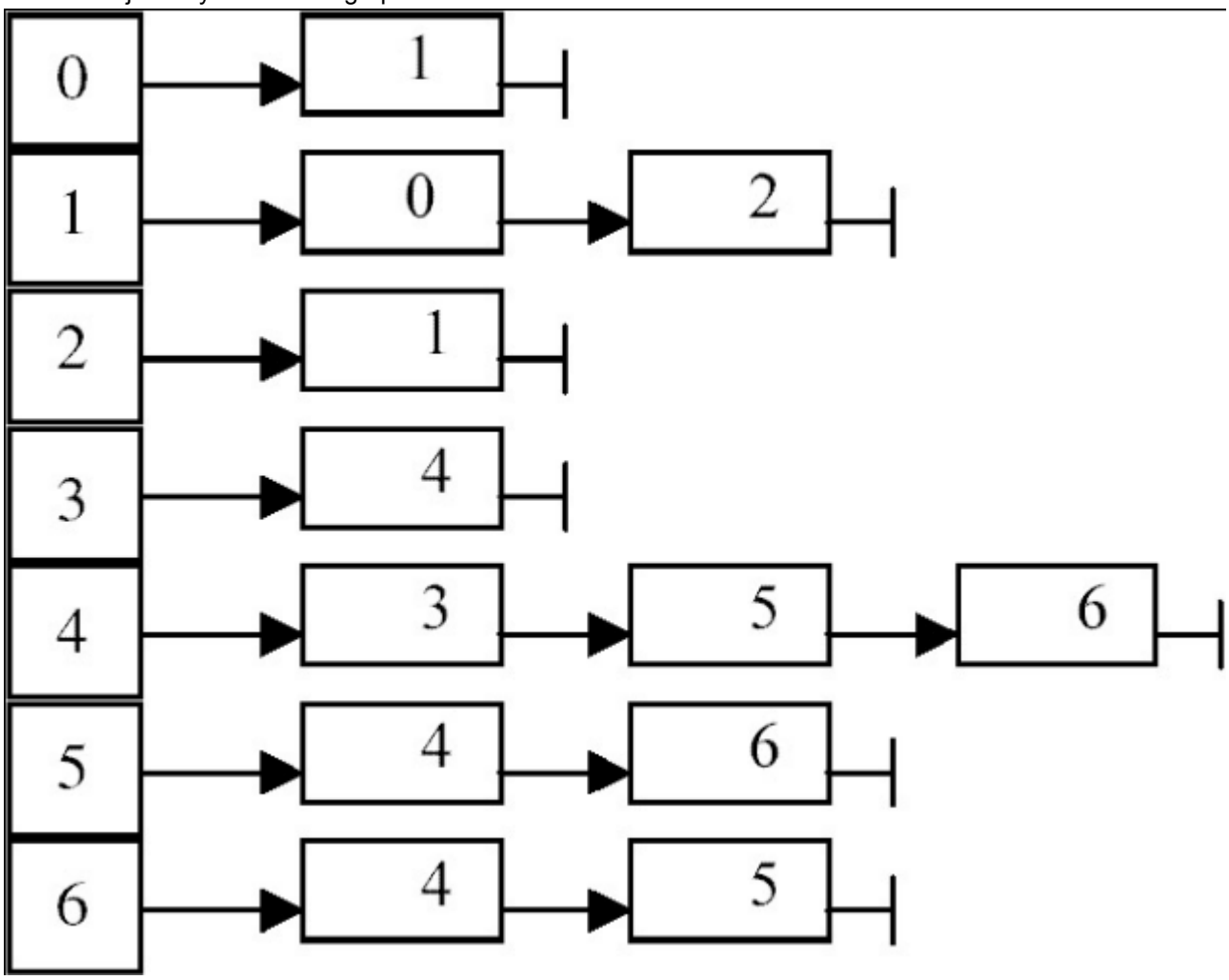

Each node in list `i` contains a vertex to which `i` is connected.

2. `dfs(v)` is implemented recursively. A Boolean vector `visited[]` is maintained, whose all entries are initially `FALSE`. `dfs(v)` marks `v` as visited by making `visited[v] = TRUE`. It then finds all the adjacent nodes of `v` and starts `dfs()` from those nodes which have not yet been visited.

For example, if `dfs(v)` is called with `v == 0`, it marks 0 and then it traverses the adjacency list `graph[0]` and calls `dfs(1)`. This marks 1 and traverses the adjacency list `graph[1]`. But since 0 is already marked, `dfs(2)` is called. It marks 2 and starts traversal of `graph[2]`. But since 1 is marked, it returns. All the previous invocations return as there are no nodes being considered in the lists. Thus, the marked vertices are {0, 1, 2}.

3. `compINC()` is a function that finds all the connected components of a graph. It maintains a local

copy of the vector `visited[]` and passes it as a parameter to `dfs(v)`. `compINC()` passes that vertex as a parameter to `dfs()` which has not yet been visited. Thus each invoking of `dfs()` finds one connected component of the graph.

4. In order to modify `dfs()` to produce a list of newly visited vertices, we tag the vertices visited by using `dfs()` as `TRISTATE`. In `compINC()`, all these `TRISTATE` vertices will form one connected component. This status is then converted to `TRUE`. The next invocation of `dfs()` returns another set of vertices tagged as `TRISTATE`, which forms another connected component, and so on.

For example, in this graph, first all vertices are tagged as `FALSE`. After invoking `dfs(0)`, the vertices tagged as `TRISTATE` are {0, 1, 2}. These are output and their tags are changed from `TRISTATE` to `TRUE`. The next invocation of `dfs(3)` tags vertices {3, 4, 5, 6} as `TRISTATE`. These are then output and their tags are changed from `TRISTATE` to `TRUE`. Since there is no vertex remaining whose tag is `FALSE`, the algorithm stops.

Points to Remember

1. All the reachable vertices can be traversed from a source vertex by using the depth-first search.
2. The data representation (a graph, in this case) should be such that it makes algorithms operating on the data efficient. Being represented as adjacency lists, we could easily traverse the list to get the vertices adjacent to a particular vertex.
3. Note how a simple recursive procedure solves the problem of finding all the reachable vertices from a vertex.
4. Note the use of descriptive words such as `FALSE`, `TRUE`, and `TRISTATE`, rather than integers 0, 1, and 2. It makes the program easily understandable.

Previous Next

ABC Amber CHM Converter Trial version, http://www.processtext.com/abcchm.html

PROBLEM: MINIMUM SPANNING TREE

Write a program to find a minimum spanning tree in a graph.

Program

```
#include <stdio.h>

#define MAXVERTICES 10
#define MAXEDGES    20

typedef enum {FALSE, TRUE} bool;

int getNVert(int edges[][3], int nedges) {
    /*
     * returns no of vertices = maxvertex + 1;
     */
    int nvert = -1;
    int j;
    for( j=0; j<nedges; ++j ) {
        if( edges[j][0] > nvert )
               nvert = edges[j][0];

        if( edges[j][1] > nvert )
               nvert = edges[j][1];
    }
    return ++nvert;          // no of vertices = maxvertex + 1;
}

bool isPresent(int edges[][3], int nedges, int v) {
    /*
     * checks whether v has been included in the spanning tree.
     * thus we see whether there is an edge incident on v which has
     * a negative cost. negative cost signifies that the edge has been
     * included in the spanning tree.
     */

    int j;

    for(j=0; j<nedges; ++j)
        if(edges[j][2] < 0 && (edges[j][0] == v || edges[j][1] == v))
               return TRUE;

    return FALSE;
```

ABC Amber CHM Converter Trial version, http://www.processtext.com/abcchm.html

```
}

void spanning(int edges[][3], int nedges) {
    /*
     * finds a spanning tree of the graph having edges.
     * uses kruskal's method.
     * assumes all costs to be positive.
     */
    int i, j;
    int tv1, tv2, tcost;
    int nspanedges = 0;
    int nvert = getNVert(edges, nedges);
    // sort edges on cost.
    for(i=0; i<nedges-1; ++i)
        for(j=i; j<nedges; ++j)
               if(edges[i][2] > edges[j][2]) {
                      tv1 = edges[i][0]; tv2 = edges[i][1]; tcost =
edges[i][2];
                      edges[i][0] = edges[j][0]; edges[i][1] = edges[j][1];
edges[i][2] = edges[j][2];
                      edges[j][0] = tv1; edges[j][1] = tv2; edges[j][2] =
tcost;
               }

        for(j=0; j<nedges-1; ++j) {
            // consider edge j connecting vertices v1 and v2.
            int v1 = edges[j][0];
            int v2 = edges[j][1];

            // check whether it forms a cycle in the uptil now formed spanning
tree.
            // checking can be done easily by checking whether both v1 and v2
are in
            // the current spanning tree!
            if(isPresent(edges, nedges, v1) && isPresent(edges, nedges, v2))
// cycle.
                   printf("rejecting: %d %d %d...\n", edges[j][0],
edges[j][1], edges[j][2]);
            else {
                   edges[j][2] = -edges[j][2];
                   printf("%d %d %d.\n", edges[j][0], edges[j][1], -
edges[j][2]);
                   if(++nspanedges == nvert-1)
                          return;
            }
        }
```

ABC Amber CHM Converter Trial version, http://www.processtext.com/abcchm.html

```
        printf("No spanning tree exists for the graph.\n");
    }

    main() {
        int edges[][3] = {
                                        {0,1,16},
                                        {0,4,19},
                                        {0,5,21},
                                        {1,2,5},
                                        {1,3,6},
                                        {1,5,11},
                                        {2,3,10},
                                        {3,4,18},
                                        {3,5,14},
                                        {4,5,33}
                                    };
    int nedges = sizeof(edges)/3/sizeof(int);
    spanning(edges, nedges);

    return 0;
}
```

Program Description

1. A tree consisting solely of edges in a graph G and including all vertices in G is called a spanning tree. A minimum spanning tree of a weighted graph is the spanning tree with the minimum total cost of its edges.
   Example:

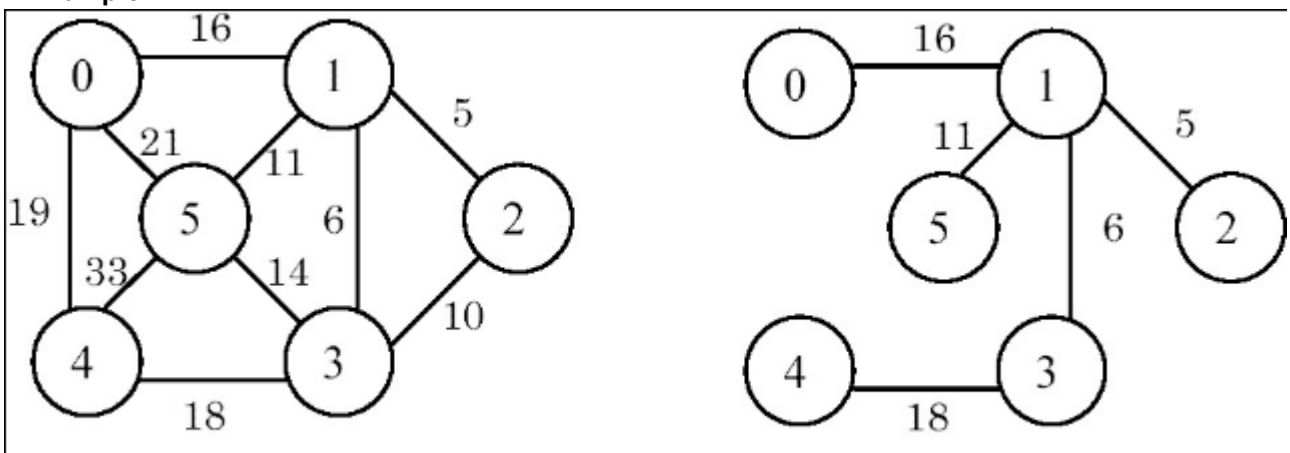

An example graph and its minimum spanning tree.

2. The graph is represented as an array of edges. Each entry in the array is a triplet representing an edge consisting of source vertex, destination vertex, and the cost associated with the edge. The method used in finding a minimum spanning tree is that given by Kruskal. In this approach, a minimum spanning tree `T` is built edge by edge. Edges are considered for inclusion in `T` in a non-decreasing order of their costs. An edge is included if it does not form a cycle with the edges already in `T`. Since graph `G` is connected, and has $n > 0$ vertices, exactly n–1 edges will be selected for inclusion in `T`.
3. Kruskal's algorithm is as follows:

```
T={};       // empty set.
while T contains less than n-1 edges and E not empty do
    choose an edge (v, w) from E of lowest cost.
    delete (v, w) from E.
    if (v, w) does not create a cycle in T
            add (v, w) to T.
    else
            discard (v, w).
endwhile.
if T contains less than n-1 edges
    print("no spanning tree exists for this graph.");
```

In order for the choice of the lowest cost edge from `E` to become efficient, we sort the edge array over the cost of the edge. To check whether an edge (`v`, `w`) forms a cycle, we simply need to check whether both `v` and `w` appear in any of the previously added edges in `T`. We assume that all the costs are positive and we make them negative to signify that the edge has been included in `T`.

Example:
For the example graph, the run of the algorithm is as follows:

step	edge	cost	action	spanning-tree
0	—	—	—	{}
1	(1, 2)	5	accept	{(1, 2)}
2	(1, 3)	6	accept	{(1, 2), (1, 3)}
3	(2, 3)	10	reject	{(1, 2), (1, 3)}
4	(1, 5)	11	accept	{(1, 2), (1, 3), (1, 5)}
5	(3, 5)	14	reject	{(1, 2), (1, 3), (1, 5)}
6	(0, 1)	16	accept	{(1, 2), (1, 3), (1, 5), (0, 1)}
7	(3, 4)	18	accept	{(1, 2), (1, 3), (1, 5), (0, 1), (3, 4)}

Points to Remember

1. A minimum spanning tree of a weighted graph G is a tree that consists of edges solely from the edges of G, which covers all the vertices in G, and which has the minimum combined cost of its edges.
2. The complexity of Kruskal's method used for finding the minimum spanning tree of a graph G is O(e loge), where e is the number of edges in G.
3. Note that the `union` and `find` algorithms for set representation can be used to check for cycle and inclusion of an edge in a set.
4. There can be multiple minimum spanning trees in a graph.

Previous Next

ABC Amber CHM Converter Trial version, http://www.processtext.com/abcchm.html

PROBLEM: TOPOLOGICAL SORT

Write a program to find the topological order of a digraph G represented as adjacency lists.

Program

```
#include <stdio.h>

#define N 11          // no of total vertices in the graph.

typedef enum {FALSE, TRUE} bool;
typedef struct node node;

struct node {
    int count;        // for arraynodes : in-degree.
                      // for listnodes  : vertex no this vertex is connected
to.
                      // if this node is out of graph : -1.
                      // if this has 0 indegree then it occurs in zerolist.
    node *next;
};
node graph[N];
node *zerolist;

void addToZerolist( int v ) {
    /*
     * adds v to zerolist as v has 0 predecessors.
     */
    node *ptr = (node *)malloc( sizeof(node) );
    ptr->count = v;
    ptr->next = zerolist;
    zerolist = ptr;
}

void buildGraph( int a[][2], int edges ) {
    /*
     * fills global graph with input given in a.
     * a[i][0] is src vertex and a[i][1] is dst vertex.
     */
    int i;

    // init graph.
    for( i=0; i<N; ++i ) {
        graph[i].count = 0;
```

ABC Amber CHM Converter Trial version, http://www.processtext.com/abcchm.html

```
        graph[i].next = NULL;
    }

    // now add the list entries.
    for( i=0; i<edges; ++i ) {
        // add new node to src list.
        node *ptr = (node *)malloc( sizeof(node) );
        ptr->count = a[i][1];
        ptr->next = graph[ a[i][0] ].next;
        graph[ a[i][0] ].next = ptr;
        // increase indegree of dst.
        graph[ a[i][1] ].count++;
    }

    // now create list of zero predecessors.
    zerolist = NULL;  // list of vertices having 0 predecessors.
    for( i=0; i<N; ++i )
        if( graph[i].count == 0 ) {
               addToZerolist(i);
        }
}

void printGraph() {
    int i;
    node *ptr;

    for( i=0; i<N; ++i ) {
        node *ptr;
        printf( "%d: pred=%d: ", i, graph[i].count );
        for( ptr=graph[i].next; ptr; ptr=ptr->next )
               printf( "%d ", ptr->count );
        printf( "\n" );
    }
    printf( "zerolist: " );
    for( ptr=zerolist; ptr; ptr=ptr->next )
        printf( "%d ", ptr->count );
    printf( "\n" );
}

int getZeroVertex() {
    /*
     * returns the vertex with zero predecessors.
     * if no such vertex then returns -1.
     */
```

ABC Amber CHM Converter Trial version, http://www.processtext.com/abcchm.html

```
    int v;
    node *ptr;

    if( zerolist == NULL )
       return -1;
    ptr = zerolist;
    v = ptr->count;
    zerolist = zerolist->next;
    free(ptr);

    return v;
}

void removeVertex( int v ) {
    /*
     * deletes vertex v and its outgoing edges from global graph.
     */
    node *ptr;
    graph[v].count = -1;
    // free the list graph[v].next.
    for( ptr=graph[v].next; ptr; ptr=ptr->next ) {
        if( graph[ ptr->count ].count > 0 ) // normal nodes.
               graph[ ptr->count ].count-;
if( graph[ ptr->count ].count == 0 )           // this is NOT else of above
if.
               addToZerolist( ptr->count );
    }
}

void topsort( int nvert ) {
    /*
     * finds recursively topological order of global graph.
     * nvert vertices of graph are needed to be ordered.
     */
    int v;

    if( nvert > 0 ) {
        v = getZeroVertex();
        if( v == -1 ) {       // no such vertex.
               fprintf( stderr, "graph contains a cycle.\n" );
               return;
        }
        printf( "%d.\n", v );
        removeVertex(v);
```

ABC Amber CHM Converter Trial version, http://www.processtext.com/abcchm.html

```
        topsort( nvert-1 );
    }
}

int main() {
    int a[][2] = {
                                {0,1},
                                {0,3},
                                {0,2},
                                {1,4},
                                {2,4},
                                {2,5},
                                {3,4},
                                {3,5}
                        };
    buildGraph( a, 8 );
    printGraph();
    topsort(N);
}
```

Explanation

1. A linear ordering of vertices of a digraph G, with the property that if `i` is a predecessor of `j`, then `i` precedes `j` in the linear ordering, is called a topological order of G.
2. The digraph G is maintained as adjacency lists. In this representation, G is an array `graph[0...n-1]`, where each element `graph[i]` is a linked list of vertices to which vertex `i` is connected, and `n` is the number of vertices in G.
3. We also maintain a `zerolist`, which is a list of vertices that have zero predecessors. The necessity for this list will be clear from an algorithm for a topological sort, as follows:
4.
5. `topsort(n) {`
6. `if( n > 0 ) {`
7. `if every vertex has a predecessor then`
8. `error( "graph contains a cycle." ).`
9. `pick a vertex v that has no predecessors. //`
10. `getZeroVertex()`
11. `output v.`
12. `delete v and all the edges leading out of v in the graph. //`
    `removeVertex()`
13. `topsort(n-1).`
14. `}`
15. `}`
16. The algorithm `topsort()` is tail-recursive. From `zerolist`, it removes a vertex `v` containing zero predecessors, and outputs it. This vertex `v` either has no predecessors in G, or all its predecessors have already been output. Thus all the vertices in `zerolist` are candidates for the next output. After `v` is output, all the vertices to which `v` points may become the candidates for the next output. Thus we remove all the edges starting from `v` and rerun `topsort()` over the remaining vertices.
    Example: Let the digraph be as shown here.

ABC Amber CHM Converter Trial version, http://www.processtext.com/abcchm.html

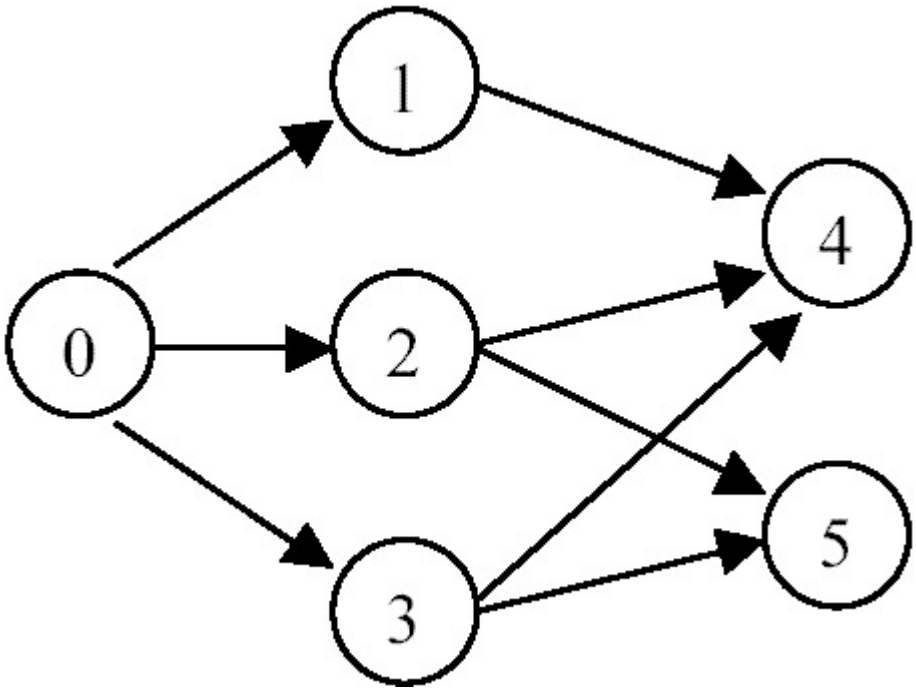

Step	Zerolist	Output
0	{0}	nil
1	{1, 2, 3}	0
2	{2, 3}	1
3	{3}	2
4	{4,5}	3
5	{5}	4
6	{}	5

Points to Remember

1. A linear ordering of vertices of a digraph G, with the property that if `i` is a predecessor of `j`, then `i` precedes `j` in the linear ordering, is called the topological order of G.
2. The complexity of topological order is O(*n*+*e*) where *n* is the number of vertices and *e* is the number of edges in the digraph.
3. Removal of an edge results in a decrease in the predecessor count of the destination vertex. If this count reaches 0, the vertex should be inserted in the `zerolist`.
4. By maintaining a list of vertices with zero predecessors, the computing time of the algorithm decreases.

Previous Next

ABC Amber CHM Converter Trial version, http://www.processtext.com/abcchm.html

PROBLEM: FINDING THE SHORTEST PATH BY USING AN ADJACENCY MATRIX

Given a digraph represented as an adjacency matrix, find the shortest path from a vertex `v` to all the other vertices in the graph.

Program

```
#include <stdio.h>

#define MAXINT 99999
#define MAXVERTICES 10
typedef enum {FALSE, TRUE} bool;
void print( int cost[][MAXVERTICES], int nvert ) {
    /*
     * prints cost matrix.
     */
    int i, j;

    for( i=0; i<nvert; ++i ) {
        for( j=0; j<nvert; ++j )
               printf( "%6d", cost[i][j] );
        printf( "\n" );
    }
}

int choose( int dist[], bool s[], int nvert ) {
    /*
     * returns vertex u such that:
     * dist[u] = min{ dist[w] } where s[w] == FALSE.
     */
    int i;
    int u=-1;
    int mindist = MAXINT;

    for( i=0; i<nvert; ++i )
        if( s[i] == FALSE && dist[i] <= mindist )
               u=i, mindist=dist[i];
    return u;
}

void sssp( int v, int cost[][MAXVERTICES], int dist[], int nvert ) {
    /*
     * finds shortest path from v to all other vertices.
```

ABC Amber CHM Converter Trial version, http://www.processtext.com/abcchm.html

```
     * cost is the cost matrix.
     * dist is the vector in which output will be written.
     * nvert is no of vertices in the graph.
     */
    bool s[MAXVERTICES];
    int i, u, num, w;

    for( i=0; i<nvert; ++i )
        s[i] = FALSE, dist[i] = cost[v][i];
    s[v] = TRUE;
    dist[v] = 0;
    num = 1;

    while( num < nvert-1 ) {
        u = choose( dist, s, nvert );
        s[u] = TRUE;
        num++;
        for( w=0; w<nvert; ++w )
               if( s[w] == FALSE && dist[u]+cost[u][w] < dist[w] )
                      dist[w] = dist[u] + cost[u][w];
    }
}

void printDist( int v, int dist[], int nvert ) {
    /*
     * prints distance matrix which shows min distance of each vertex
     * from v.
     */
    int i;

    printf( "min dist from vertex %d...\n", v );
    for( i=0; i<nvert; ++i )
        printf( "dist[%d]=%d.\n", i, dist[i] );
}

int main() {
    int cost[][MAXVERTICES] = {{0,2,2,1},{3,0,4,1},{5,16,0,9},{1,1,2,0}};
    int dist[MAXVERTICES];
    int nvert = 4;              // no of vertices.

    sssp( 2, cost, dist, nvert );
    printDist( 2, dist, nvert );

    return 0;
```

ABC Amber CHM Converter Trial version, http://www.processtext.com/abcchm.html

```
}
```

Explanation

1. The digraph is represented as an adjacency matrix. The size of the matrix is N×N where N is the number of vertices in the digraph. An entry `matrix[i][j]` specifies the cost of the directed edge from vertex `i` to vertex `j`. If such an edge does not exist, then the cost is set to `MAXINT`. All diagonal entries of the matrix `matrix[i][i]` are set to 0.
2. The function `sssp(v, cost, dist, nvert )` implements the single-source- shortest-path algorithm to find the shortest path from a vertex `v` in a digraph that is represented as an adjacency matrix `cost`. `nvert` is the number of vertices in the digraph and `dist` is the vector that will finally contain the output. Thus an entry `dist[i]` will be the minimum distance of vertex `i` from vertex `v`.
3. The function uses a vector `s[]` of Boolean to represent the status of each vertex: whether processed or not. It is initialized to `FALSE`. `s[v]` is marked, meaning it is processed. `dist[v]` is set to 0. Then the function chooses a vertex `u` that is yet to be processed and which is at a minimum distance from `v`. Vertex `u` is marked as processed. It then processes vector `dist[]`, which may get updated because of the addition of `u`. The function checks whether `dist[u]+cost[u][w] < dist[w]` for each yet-to-be-processed node `w` in the digraph. If it is, then `dist[w]` is updated as `dist[u]+cost[u][w]`.
   When all the vertices are processed, `dist[]` contains the required result.
   Example:

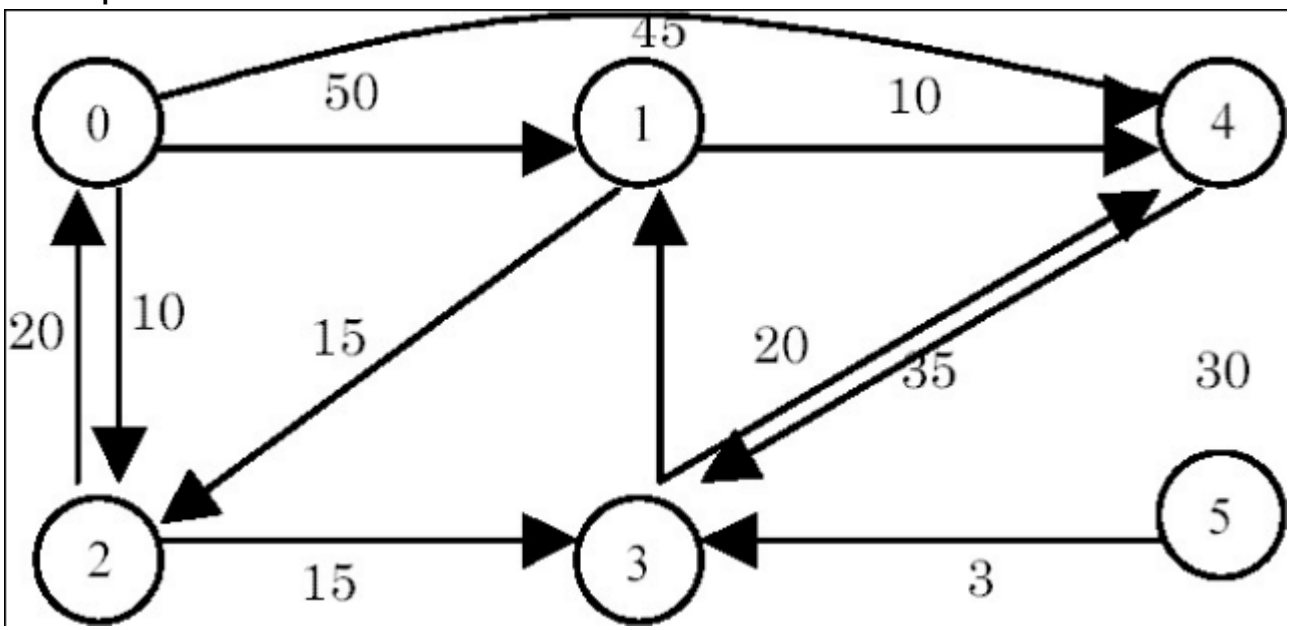

Let `v=0`. Then, different steps in the run of the algorithm are as follows:

M signifies `MAXINT`, which means that the vertex cannot be reached from `v`.

step	u	dist
0	nil	0 50 10 M 45 M
1	2	0 50 10 35 45 M
2	3	0 45 10 35 45 M
3	1	0 45 10 35 45 M
4	4	0 45 10 35 45 M
5	5	0 45 10 35 45 M

Points to Remember

ABC Amber CHM Converter Trial version, http://www.processtext.com/abcchm.html

1. The complexity of the `sssp()` is O(*N*^2) where *N* is the number of vertices in the digraph.
2. The constant of proportionality of the complexity of `choose()` may be improved by using a list of yet-to-be-processed vertices.
3. Representing the digraph as an adjacency matrix makes the retrieval of the cost of an edge O(1).

Previous Next

ABC Amber CHM Converter Trial version, http://www.processtext.com/abcchm.html

PROBLEM: FINDING THE SHORTEST PATH BY USING AN ADJACENCY LIST

Rewrite the function `sssp()` for finding the shortest path, such that the digraph is represented by its adjacency lists instead of the adjacency matrix. Also, instead of maintaining set S of vertices to which the shortest paths have already been found, the set V(G)–S is represented by using a linked list where V(G) is the set of vertices in digraph G.

Program

```
#include <stdio.h>

#define MAXINT 99999
#define MAXVERTICES 10
typedef struct node node;
typedef struct setnode setnode;
typedef enum {FALSE, TRUE} bool;

struct node {
    int dst;
    int cost;
    node *next;
};

struct setnode {
    int v;
    setnode *next;
};

void printGraph( node *cost[], int nvert ) {
    /*
     * prints the graph.
     */
    int i, j;

    for( i=0; i<nvert; ++i ) {
        node *ptr;
        for( ptr=cost[i]; ptr; ptr=ptr->next )
               printf( "[%d,%d] ", ptr->dst, ptr->cost );
        printf( "\n" );
    }
}

void insertEdge( node **ptr, int dst, int cost ) {
```

ABC Amber CHM Converter Trial version, http://www.processtext.com/abcchm.html

```
    /*
     * insert a new node at the start.
     */
    node *newnode = (node *)malloc( sizeof(node) );
    newnode->dst = dst;
    newnode->cost = cost;
    newnode->next = *ptr;
    *ptr = newnode;
}

void buildGraph( node *cost[], int costnew[][3], int nedges ) {
    /*
     * fills cost as adjacency list from array costnew.
     */
    int i;
    for( i=0; i<nedges; ++i )
        insertEdge( cost+costnew[i][0], costnew[i][1], costnew[i][2] );
}

int choose( int dist[], setnode *s ) {
    /*
     * returns vertex u such that:
     * dist[u] = min{ dist[w] } where w is in set s.
     */
    int u=-1;
    int mindist = MAXINT;
    setnode *ptr;

    for( ptr=s->next; ptr; ptr=ptr->next )
        if( dist[ptr->v] <= mindist )
                u=ptr->v, mindist=dist[ptr->v];
    return u;
}

int getCost( node **cost, int src, int dst ) {
    /*
     * return cost of edge from src to dst.
     */
    node *ptr;
    for( ptr=cost[src]; ptr; ptr=ptr->next )
        if( ptr->dst == dst )
                return ptr->cost;
    return MAXINT;
}
```

ABC Amber CHM Converter Trial version, http://www.processtext.com/abcchm.html

```
void removeFromSet( setnode *s, int v ) {
    /*
     * remove vertex v from set s.
     */
    setnode *prev, *ptr;
    for( prev=s, ptr=prev->next; ptr; prev=ptr, ptr=ptr->next )
        if( ptr->v == v ) {
                prev->next = ptr->next;
                free(ptr);
                return;
        }
    // v does NOT exist in the set.
}

void insertIntoSet( setnode *s, int v ) {
    /*
     * add vertex v to the set s.
     */
    setnode *ptr = (setnode *)malloc( sizeof(setnode) );
    ptr->v = v;
    ptr->next = s->next;
    s->next = ptr;
}

bool isInSet( setnode *s, int v ) {
    /*
     * returns TRUE if vertex v is in set s.
     */
    setnode *ptr;
    for( ptr=s->next; ptr; ptr=ptr->next )
        if( ptr->v == v )
                return TRUE;
    return FALSE;
}

void sssp( int v, node **cost, int dist[], int nvert ) {
    /*
     * finds shortest path from v to all other vertices.
     * cost is the cost adjacency list.
     * dist is the vector in which output will be written.
     * nvert is no of vertices in the graph.
     */
    setnode s; // list of vertices yet to be considered.
```

ABC Amber CHM Converter Trial version, http://www.processtext.com/abcchm.html

```
    int i, u, num, w;
    node *ptr;

    for( i=0; i<nvert; ++i ) {
        insertIntoSet( &s, i );
        dist[i] = MAXINT;
    }
    for( ptr=cost[v]; ptr; ptr=ptr->next )
        dist[ptr->dst] = ptr->cost;

    removeFromSet( &s, v );
    dist[v] = 0;
    num = 1;

    while( num < nvert-1 ) {
        u = choose( dist, &s );
        removeFromSet( &s, u );
        num++;
        for( w=0; w<nvert; ++w ) {
               int c = getCost( cost, u, w );
               if( isInSet( &s, w ) && dist[u]+c < dist[w] )
                       dist[w] = dist[u] + c;
        }
    }
}

void printDist( int v, int dist[], int nvert ) {
    /*
     * prints min dist vector.
     */
    int i;

    printf( "min dist from vertex %d...\n", v );
    for( i=0; i<nvert; ++i )
        printf( "dist[%d]=%d.\n", i, dist[i] );
}

int main() {
    int costnew[][3] =      {                        {0,1,50},
                                            {0,2,10},
                                            {0,4,45},
                                            {1,2,15},
                                            {1,4,10},
                                            {2,0,20},
```

ABC Amber CHM Converter Trial version, http://www.processtext.com/abcchm.html

```
                                        {2,3,15},
                                        {3,1,20},
                                        {3,4,35},
                                        {4,3,30},
                                        {5,3,3}
                                    };
    int dist[MAXVERTICES];
    int nvert = 6;          // no of vertices.
    int nedges = 11;  // no of edges in costnew.
    node **cost = (node **)calloc( nvert, sizeof(node *) );

    buildGraph( cost, costnew, nedges );
    printGraph( cost, nvert );
    sssp( 4, cost, dist, nvert );
    printDist( 4, dist, nvert );

    return 0;
}
```

Explanation

1. Cost is maintained as an array containing adjacency lists for each vertex in the digraph. The function `buildGraph()` fills this array. An adjacency list for a vertex is a linked list where each node contains the vertex, the cost of the corresponding edge, and a pointer to the next node.

For example, consider the following graph:

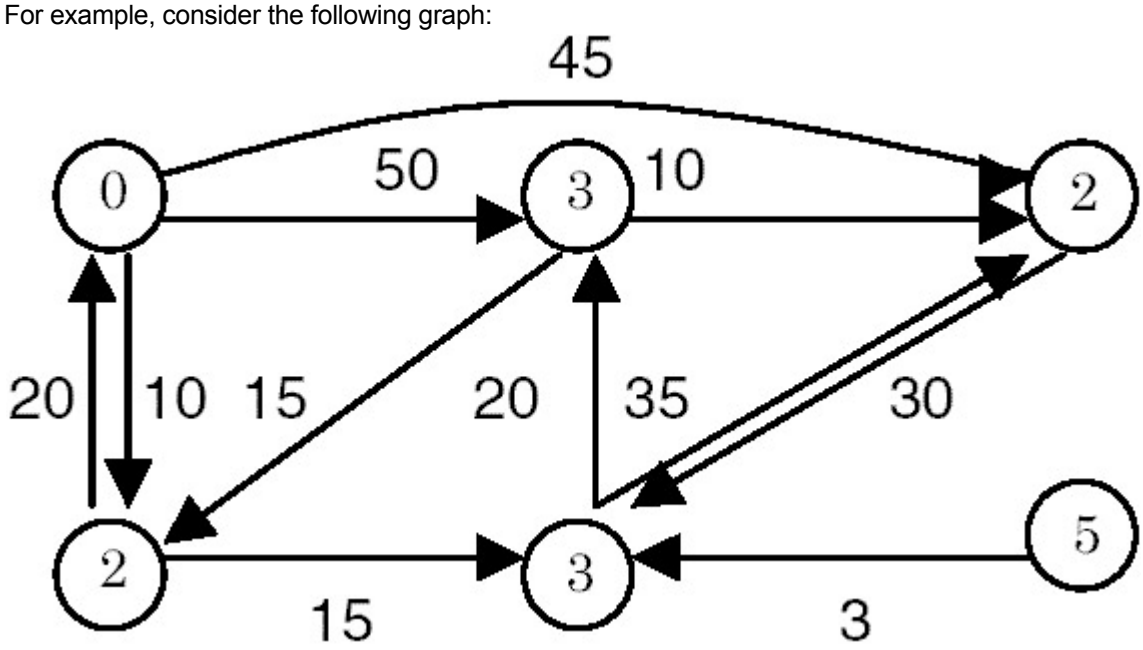

The adjacency lists are maintained as follows:

ABC Amber CHM Converter Trial version, http://www.processtext.com/abcchm.html

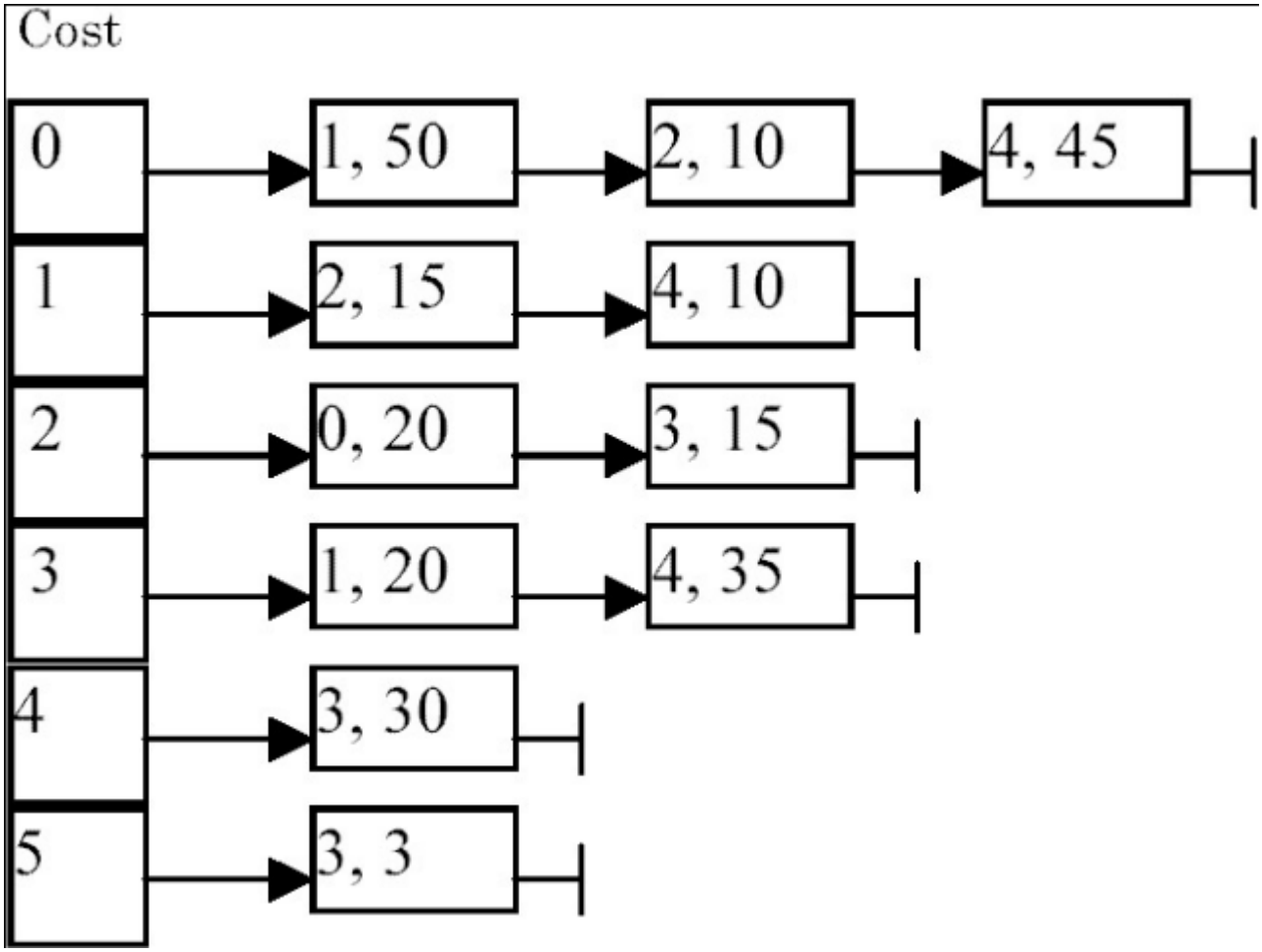

Note that each node contains a pair of integers, (`vertex`, `cost`).

2. The function `sssp()` remains nearly the same except getting the cost of an edge and accesses the set S. The cost of an edge can be retrieved using the function `getCost()`. It needs O(*n*) traversal of the adjacency list corresponding to the source vertex of the edge, where *n* is the number of nodes in the list. In the `cost` matrix-based algorithm, this was O(1). Removal of a vertex (`removeFromSet()`) from the list requires O(*n*) time. This time was also constant earlier as we flagged the vertex as `FALSE`. Furthermore, earlier we could check the status of a vertex to be `TRUE` or `FALSE` using `s[i]`, but now the function `isInSet()` needs to traverse the list `s` to see whether the node has been processed or NOT. This makes it O(*n*). However, the function `choose()`, which was earlier O(*n*), now becomes O(1), as we need to remove only the first element from the list `s`.
3. The overall complexity of `sssp()` increases from O(*n*^2) to O(*n*^3) as `getCost()` and `isInSet()` become O(*n*), where *n* is the number of vertices in the digraph.

Points to Remember

1. Note how the change in the data structures affected the algorithm efficiency.
2. In order to make `choose()` O(1), we had to make `removeFromSet()` and `isInSet()` O(*n*). This trade-off should be studied carefully before implementation.
3. The change from an adjacency matrix to adjacency lists may reduce some space, but it increases complexity of the function `getCost()`.

Previous Next

ABC Amber CHM Converter Trial version, http://www.processtext.com/abcchm.html

PROBLEM: THE M SHORTEST PATH

Write a function `mshortest( cost, src, dst, m )` that finds `m` shortest paths 7(if any exist) from `src` to `dst` in a digraph represented by its cost adjacency matrix `cost`.

Program

```
#include <stdio.h>

#define M 8
#define MAXVERTICES 10
#define MAXINT 99999

typedef struct node node;
typedef struct ansnode ansnode;
typedef enum {FALSE, TRUE} bool;

struct node {
    int src;   // for head node: this is cost of the edges in the list.
    int dst;
    int dummy; // used for temporarily saving the cost of this edge.
    node *next;
};

struct ansnode {
    node path;
    node inedges, exedges;
};

ansnode answers[M];
int indexans;         // no of paths generated so far: >=0 & <= M.

void init() {
    /*
     * some initialization.
     */
    int i;
    for( i=0; i<M; ++i ) {
        ansnode *a = answers+i;
        a->path.src = 0;      // this is combined cost of the edges in this
list.
        a->path.next = NULL;
        a->inedges.next = a->exedges.next = NULL;
    }
```

ABC Amber CHM Converter Trial version, http://www.processtext.com/abcchm.html

```
    indexans = 0;
}

void pushFront( node *edges, int src, int dst ) {
    /*
     * adds a new node containing (src,dst) at start of edges.
     */
    node *ptr = (node *)malloc( sizeof(node) );
    ptr->src = src;
    ptr->dst = dst;
    ptr->next = edges->next;
    edges->next = ptr;
}

void pushBack( node *edges, int src, int dst ) {
    /*
     * adds a new node containing (src,dst) at end of edges.
     */
    node *ptr;
    for( ptr=edges; ptr->next; ptr=ptr->next )
        ;
    // (src,dst) should be inserted after ptr;
    pushFront( ptr, src, dst );            // another hack!

}

void popFront( node *edges, int *src, int *dst ) {
    /*
     * remove a node from start of edges.
     */
    node *ptr = edges->next;
    if( ptr == NULL ) {
        *src = *dst = -1;
        return;
    }
    *src = ptr->src;
    *dst = ptr->dst;
    edges->next = ptr->next;
    free(ptr);
}

int choose( int dist[], bool s[], int nvert ) {
    /*
     * returns vertex u such that:
```

ABC Amber CHM Converter Trial version, http://www.processtext.com/abcchm.html

```
     * dist[u] = min{ dist[w] } where s[w] == FALSE.
     */
    int i;
    int u=-1;
    int mindist = MAXINT;

    for( i=0; i<nvert; ++i )
        if( s[i] == FALSE && dist[i] <= mindist )
               u=i, mindist=dist[i];
    return u;
}

void printList( char *str, node *edges ) {
    /*
     * prints a node list.
     */
    node *ptr;
    printf( "%s: ", str );
    for( ptr=edges->next; ptr; ptr=ptr->next )
        printf( "(%d,%d) ", ptr->src, ptr->dst );
    printf( "\n" );
}

node *revList( node *list ) {
    /*
     * returns reverse of list: modifies list.
     */
    node *ptr=list->next, *temp, *prev=NULL;
    for( ; ptr; prev=ptr, ptr=temp ) {
        temp = ptr->next;
        ptr->next = prev;
    }
    list->next = prev;
    return list;
}

int getInsertIndex( node *answer, int start ) {
    /*
     * returns index in answers where answer can be inserted.
     * uses binsrch.
     */
    int mid, end=indexans-1;
    int midcost=-1, anscost=answer->src;
```

ABC Amber CHM Converter Trial version, http://www.processtext.com/abcchm.html

```
    while( start <= end ) {
        mid = (start+end)/2;
        midcost = answers[mid].path.src;
        if( midcost == anscost )
               return mid;
        else if( midcost < anscost )
               start = mid+1;
        else
               end = mid-1;
    }
    if( midcost == -1 )
        return start;
    if( midcost < anscost )
        return mid+1;
    else
        return mid;
}

void shiftInsert( int index ) {
    /*
     * shifts answers[index..indexans-1] by one down.
     */
    int i;
    for( i=index; i<indexans; ++i )
        answers[i+1] = answers[i];
}

void insertAnswer( node *answer, node *inedges, node *exedges, int start ) {
    /*
     * inserts answer in answers sorted on cost of the answer.
     * uses binsrch and then linearly shifts answers down.
     * start helps in reducing no of iterations of binsrch.
     * it is possible that the cost of the answer is >= MAXINT.
     */
    int index;

    if( answer->src >= MAXINT )     // path length is infinite.
        return;
    index = getInsertIndex( answer, start );
    shiftInsert( index );
    answers[index].path = *answer;
    answers[index].inedges = *inedges;
    answers[index].exedges = *exedges;
    printf( "______%d cost=%d.\n", index, answers[index].path.src );
```

ABC Amber CHM Converter Trial version, http://www.processtext.com/abcchm.html

```
    printList( "____________inedges: ", inedges );
    printList( "____________exedges: ", exedges );
    indexans++;
}

node *copied( node *edges ) {
    /*
     * return a copy of the list of edges.
     */
    node *ret = (node *)malloc( sizeof(node) );
    node *retptr = ret;
    node *ptr;

    ret->src = edges->src;
    ret->next = NULL;

    for( ptr=edges->next; ptr; ptr=ptr->next ) {
        retptr->next = (node *)malloc( sizeof(node) );
        retptr = retptr->next;
        retptr->src = ptr->src;
        retptr->dst = ptr->dst;
        retptr->next = NULL;
    }
    return ret;
}
void findDstSrc( node *edges, int *dst1, int *src2, int dst ) {
    /*
     * returns the first src and last dst of the path ptr.
     */
    node *ptr = edges->next;
    if( ptr == NULL ) {
        *dst1 = *src2 = dst;
        return;
    }
    *dst1 = ptr->src;
    for( ; ptr->next; ptr=ptr->next )
        ;
    *src2 = ptr->dst;
}

void attachPaths( node *path1, node *inedges, node *path2 ) {
    /*
     * path1 = path2+inedges+path1;
     */
```

ABC Amber CHM Converter Trial version, http://www.processtext.com/abcchm.html

```
    node *ptr;

    for( ptr=inedges; ptr->next; ptr=ptr->next ) ;

    ptr->next = path1->next;
    if( path2 != NULL ) {
        for( ptr=path2; ptr->next; ptr=ptr->next ) ;

        ptr->next = inedges->next;
        path1->next = path2->next;
        path1->src += path2->src;
    }
    else
        path1->next = inedges->next;
    path1->src += inedges->src;
}

node *advanceByInc( node *path, node *inedges ) {
    /*
     * return a ptr to the first edge in path which is not in inedges.
     * simply traverse no of nodes in path equal to that in inedges and return
     * the next pointer.
     */
    node *ptrpath, *ptrin;

    for( ptrpath=path->next, ptrin=inedges->next; ptrin;
ptrpath=ptrpath->next, ptrin=ptrin->next )
        ;
    return ptrpath;
}

node *sssp( int cost[][MAXVERTICES], int v, int finalv, int nvert ) {
    /*
     * finds shortest path from v to all other vertices and thus to finalv.
     * cost is the cost matrix.
     * nvert is no of vertices in the graph.
     * returns the shortest path.
     */
    bool s[MAXVERTICES];
    int i, u, num, w;
    int spath[MAXVERTICES];
    int dist[MAXVERTICES];
    node *newpath = (node *)malloc( sizeof(node) );
    int src, dst;
```

ABC Amber CHM Converter Trial version, http://www.processtext.com/abcchm.html

```
    printf( "solving sssp(%d,%d).\n", v, finalv );
    newpath->next = NULL;
    for( i=0; i<nvert; ++i )
        spath[i] = -1;
    for( i=0; i<nvert; ++i )
        s[i] = FALSE, dist[i] = cost[v][i];

    s[v] = TRUE;
    dist[v] = 0;
    num = 1;

    while( num < nvert-1 ) {
        u = choose( dist, s, nvert );
        s[u] = TRUE;
        num++;
        if( spath[u] == -1 )
               spath[u] = v;
        for( w=0; w<nvert; ++w )
               if( s[w] == FALSE && dist[u]+cost[u][w] < dist[w] ) {
                      dist[w] = dist[u] + cost[u][w];
                      spath[w] = u;
               }
    }
    printf( "path=%d ", finalv );
    dst = finalv;
    for( w=spath[finalv]; w!=-1; w=spath[w] ) {
        printf( "%d ", w );
        src = w;
        pushBack( newpath, src, dst );
        dst = src;
    }
    newpath->src = dist[finalv];    // cost of this path.
    printf( ".\n" );

    return newpath;
}

void solveshortest( int index, int cost[][MAXVERTICES], int src, int dst, int
nvert ) {
    /*
     * driver for sssp().
* sets constraints for the new path. The constraints are
* inclusion and exclusion of some edges.
```

ABC Amber CHM Converter Trial version, http://www.processtext.com/abcchm.html

```
* exclusion is done by temporarily making entry cost[i][j] equal to 0
     * and then restoring it after sssp().
* inclusion of some path is carried out by calling sssp() twice with the
included
* path removed. The two paths and the inclusion list together contain the new
     * shortest path.
     * the global array of answers is updated as new paths are being
calculated.
     */
    node *path = &answers[index].path;
    node *inedges = &answers[index].inedges;
    node *exedges = &answers[index].exedges;
    node *ptr;

    for( ptr=exedges->next; ptr; ptr=ptr->next ) {// for each exclusion edge.
        ptr->dummy = cost[ptr->src][ptr->dst];      // saving.
        cost[ptr->src][ptr->dst] = MAXINT;
    }
    ptr = advanceByInc( path, inedges );
    for( ; ptr; ptr=ptr->next ) {   // for each edge.
        int dummy1, dummy2;
        int dst1, src2;
        node *path1, *path2=NULL;

        printList( "path: ", path );
        printList( "inedges: ", inedges );
        printList( "exedges: ", exedges );

     // exclusion edges.
        printf( "exedge=(%d,%d).\n", ptr->src, ptr->dst );
        pushFront( exedges, ptr->src, ptr->dst );
        exedges->next->dummy = cost[ptr->src][ptr->dst];  // saving.
        cost[ptr->src][ptr->dst] = MAXINT;  // temporarily removed.

        // inclusion edges.
        findDstSrc( inedges, &dst1, &src2, dst );
        printf( "inedges: dst1=%d, src2=%d.\n", dst1, src2 );

        path1 = sssp( cost, src, dst1, nvert );
        if( src2 != dst )
               path2 = sssp( cost, src2, dst, nvert );
        attachPaths( path1, revList(copied(inedges)), path2 );
        printList( "attachpath: ", path1 );
        insertAnswer( path1, copied(inedges), copied(exedges), index+1 );
```

ABC Amber CHM Converter Trial version, http://www.processtext.com/abcchm.html

```
        // now restore the cost matrix.
        cost[ptr->src][ptr->dst] = exedges->next->dummy;

        // remove the exclusion edge.
        popFront( exedges, &dummy1, &dummy2 );
        // update inclusion list with that edge.
        pushFront( inedges, dummy1, dummy2 );
        inedges->src += cost[dummy1][dummy2];
    }
    for( ptr=exedges->next; ptr; ptr=ptr->next ) // for each exclusion edge.
        cost[ptr->src][ptr->dst] = ptr->dummy;
}

void mshortest( int cost[][MAXVERTICES], int src, int dst, int nvert )
    {
    /*
     * finds m shortest paths between src and dst.
     */
    int i=0;
    node *inedges = (node *)malloc( sizeof(node) );
    node *exedges = (node *)malloc( sizeof(node) );
    node *newpath = sssp( cost, src, dst, nvert );

    inedges->src = exedges->src = 0;
    inedges->next = exedges->next = NULL;
    insertAnswer( newpath, inedges, exedges, i );

    while( i<indexans && indexans <= M ) {
        printf( "__________________________\nsolving i=%d.\n", i );
        solveshortest( i++, cost, src, dst, nvert );
    }
}

int main() {
    int cost[][MAXVERTICES] = { {0,3,2,MAXINT,MAXINT,MAXINT},
                                    {MAXINT,MAXINT,MAXINT,MAXINT,0,5},
                                    {MAXINT,MAXINT,MAXINT,MAXINT,MAXINT,0 };
                                    {MAXINT,0,5,7,4,MAXINT},
{MAXINT,MAXINT,0,4,1,MAXINT},

{MAXINT,MAXINT,MAXINT,0,5,3},
                  };
    mshortest( cost, 0, 5, 6 );
```

ABC Amber CHM Converter Trial version, http://www.processtext.com/abcchm.html

```
    return 0;
}
```

Explanation

1. The digraph G is maintained as its cost adjacency matrix. `cost[i][i] = 0` and `cost[i][j] = MAXINT` for `i != j`, and if there is no edge from `i` to `j`.
2. We assume that every edge has a positive cost. Let `p1 = v0, v1, ..., vk` be the shortest path from `src` to `dst`. If `P` is the set of all simple `src`-to-`dst` paths in G, then it is easy to see that every path in `P-{p1}` differs from `p1` in exactly one of the following `k` ways.
    1. It contains the edges `(v1, v2), ..., (vk-1, vk)` but not `(v0, v1)`.
    2. It contains the edges `(v2, v3), ..., (vk-1, vk)` but not `(v1, v2)`.
        - ... ...
        - (`k`) It does not contain the edge `(vk-1, vk)`.

   Thus we see that if we put constraints on a shortest path as for the aforementioned `k` conditions, then we get more next-shortest paths satisfying different constraints. These constraints either require certain edges to be included or excluded from the original shortest path as just given.
3. The algorithm `mshortest()` is as follows:
4.
5. `Q = {(shortest src-to-dst-path, phi)}  // phi denotes an empty set.`
6. `for i = 1 to` *m* `do  // generate` *m* `shortest paths.`

   Let (`p`,`C`) be the tuple in `Q` such that path `p` is of minimal length with set of constraints `c`.
   Output path `p`.
   Delete path `p` from `Q`.
   Determine the shortest paths in `G` under the constraints `C` and the additional constraints imposed for the new path being generated as described previously.
   Add these shortest paths together with their constraints to `Q`.
   `Q` is a set of (`p`, `C`) pairs where `p` is the shortest path generated after imposing constraints `C`. Initially, we find the shortest path from `src` to `dst` under no constraints. We then generate *m* paths in a loop. Inside the loop, we select from `Q` that (`p`, `C`) pair that has the minimum path length. After outputting, we remove the pair from `Q`. We then find the next shortest paths after imposing the constraints on `C` and additional constraints by removing an edge from the exclusion-list of edges, and adding that edge to the inclusion list. We also add the next edge of the path to the exclusion list. Thus we form a new set of constraints. We add the shortest paths generated along with the new constraints to the set `Q` and reiterate.
7. Use the function `sssp()` to find a single-source shortest path. Make minor modifications to the function to follow the constraints and exclusion of certain edges. Exclusion is carried out by temporarily removing that edge's cost from the cost matrix and restoring the cost after running `sssp()` over cost. Inclusion of consecutive edges is carried out by calling `sssp()` twice, once for the path between the first vertex of the shortest path and before the first vertex in the inclusion list, and then for the path between the last vertex of the included path and the last vertex of the shortest path.

   For example, if the shortest path is `v0 v1 v2 v3 v5`, and the inclusion list is (`v2 v3`), then `sssp()` is called for the path `v0 v1 v2`, and then for the path `v3 v5`. The new shortest path generated is returned by `sssp()`. This new path, along with its constraints and cost, is added to a global `array[M]` of answers sorted on the cost of the path. A binary search is used to get the index (`getInsertIndex()`) where the new path should be added. Insertion into the array at position `i` requires shifting of the elements from `i` forward by one position (`shiftInsert()`).
8. **Example:**

ABC Amber CHM Converter Trial version, http://www.processtext.com/abcchm.html

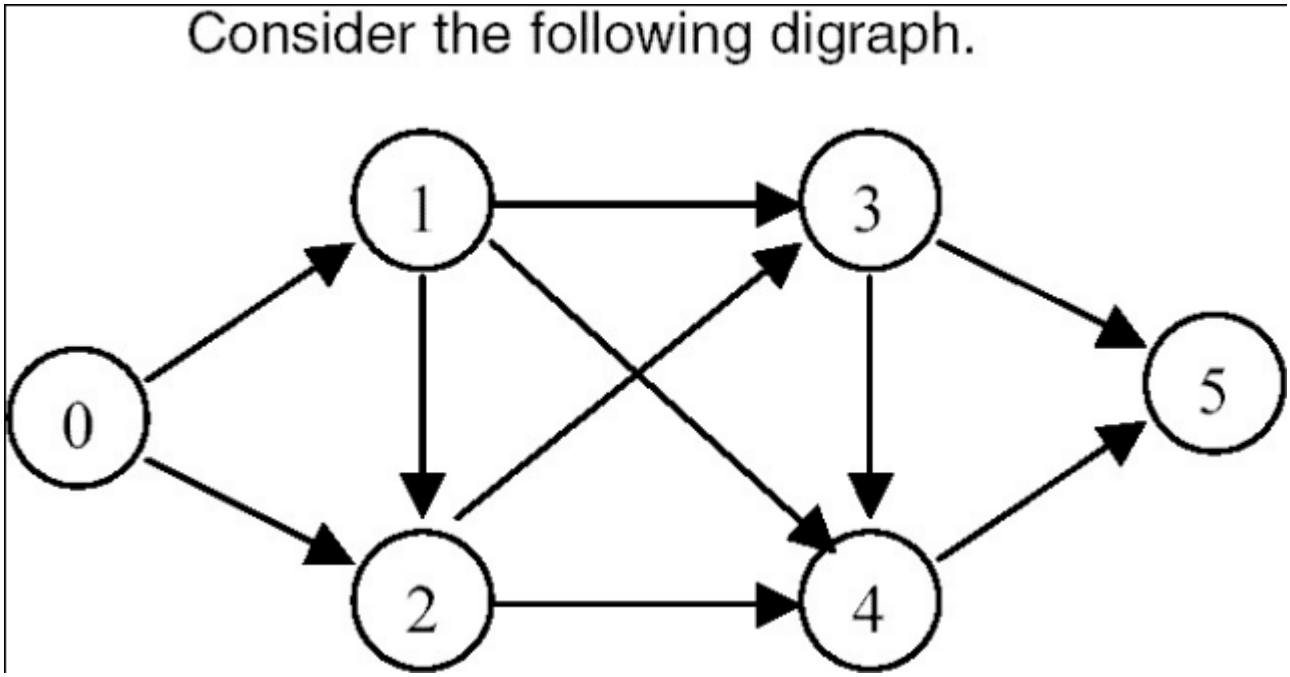

The shortest paths generated for the above graph for `M == 8` are shown here:

shortest path	cost	included edges	excluded edges	new path
v0 v2 v4 v5	8	none	none.	
		none	(v4 v5)	v0 v2 v3 v5 = 9
		(v4 v5)	(v2 v4)	v0 v1 v4 v5 = 12
		(v2 v4) (v4 v5)	(v0 v2)	v0 v1 v2 v4 v5 = 14
v0 v2 v3 v5	9	none	(v4 v5).	
		none	(v3 v5) (v4 v5)	infinity
		(v3 v5)	(v2 v3) (v4 v5)	v0 v1 v3 v5 = 13
		(v2 v3) (v3 v5)	(v0 v2) (v4 v5)	v0 v1 v2 v3 v5 = 15
v0 v1 v4 v5	12	(v4 v5)	(v2 v4).	
		(v4 v5)	(v1 v4) (v2 v4)	v0 v2 v3 v4 v5 = 16
		(v1 v4) (v4 v5)	(v0 v1) (v2 v4)	infinity
v0 v1 v3 v5	13	(v3 v5)	(v2 v3) (v4 v5)	
		(v3 v5)	(v1 v3) (v2 v3) (v4 v5)	infinity
		(v1 v3) (v3 v5)	(v0 v1) (v2 v3) (v4 v5)	infinity
v0 v1 v2 v4 v5	14	(v2 v4) (v4 v5)	(v0 v2)	
		(v2 v4) (v4 v5)	(v1 v2) (v0 v2)	infinity
		(v1 v2) (v2 v4) (v4 v5)	(v0 v1) (v0 v2)	nfinity
v0 v1 v2 v3 v5	15	(v2 v3) (v3 v5)		(v0 v2) (v4 v5)

ABC Amber CHM Converter Trial version, http://www.processtext.com/abcchm.html

shortest path	cost	included edges	excluded edges	new path
		(v2 v3) (v3 v5)	(v1 v2) (v0 v2) (v4 v5)	infinity
		(v1 v2) (v2 v3) (v3 v5)	(v0 v1) (v0 v2) (v4 v5)	infinity
v0 v2 v3 v4 v5	16	(v4 v5)	(v1 v4) (v2 v4)	
		(v4 v5)	(v3 v4) (v1 v4) (v2 v4)	infinity
		(v3 v4) (v4 v5)	(v2 v3) (v1 v4) (v2 v4)	v0 v1 v3 v4 v5 = 20
		(v2 v3) (v3 v4) (v4 v5)	(v0 v2) (v1 v4) (v2 v4)	v0 v1 v2 v3 v4 v5 = 22

Points to Remember

1. The complexity of `mshortest()` is O(*mn*^3), where *m* is the number of shortest paths generated, and n is the number of vertices in the digraph.
2. Note how we reused the single-source-shortest-path algorithm with some modifications in `mshortest()`. This not only eased programming but also simplified the analysis.
3. Maintaining a reverse list of edges helps in updating the exclusion and inclusion lists easily.

Previous Next

ABC Amber CHM Converter Trial version, http://www.processtext.com/abcchm.html

PROBLEM: THE ALL-COST SHORTEST PATH

Write a function `allCosts()` to find the shortest path between any two vertices in a digraph.

Program

```
#include <stdio.h>

#define MAXINT 99999
#define MAXVERTICES 10

typedef enum {FALSE, TRUE} bool;

void print( int cost[][MAXVERTICES], int nvert ) {
    /*
     * prints the cost matrix.
     */
    int i, j;

    for( i=0; i<nvert; ++i ) {
        for( j=0; j<nvert; ++j )
               printf( "%6d", cost[i][j] );
        printf( "\n" );
    }
}

void printCosts( int a[][MAXVERTICES], int nvert ) {
    /*
     * prints min cost matrix a.
     */
    int i, j;
    for( i=0; i<nvert; ++i )
        for( j=0; j<nvert; ++j )
               printf( "cost[%d][%d]=%d.\n", i, j, a[i][j] );
}

void allCosts( int cost[][MAXVERTICES], int a[][MAXVERTICES], int nvert ) {
    /*
     * finds all pairs shortest paths and store in a[][].
     */
    int i, j, k;

    for( i=0; i<nvert; ++i )
```

ABC Amber CHM Converter Trial version, http://www.processtext.com/abcchm.html

```
        for( j=0; j<nvert; ++j )
                a[i][j] = cost[i][j];
    for( k=0; k<nvert; ++k )
        for( i=0; i<nvert; ++i )
                for( j=0; j<nvert; ++j )
                        if( a[i][k]+a[k][j] < a[i][j] )
                                a[i][j] = a[i][k] + a[k][j];
}

int main() {
    int cost[][MAXVERTICES] =       { {0,50,10,MAXINT,45,MAXINT},
                                {MAXINT,0,15,MAXINT,10,MAXINT},
                                {20,MAXINT,0,15,MAXINT,MAXINT},
                                {MAXINT,20,MAXINT,0,35,MAXINT},
                                {MAXINT,MAXINT,MAXINT,30,0,MAXINT},
                                {MAXINT,MAXINT,MAXINT,3,MAXINT,0}
                            };
    int a[MAXVERTICES][MAXVERTICES];
    int nvert = 6;            // no of vertices.

    allCosts( cost, a, nvert );
    printCosts( a, nvert );

    return 0;
}
```

Explanation

1. One way to solve the all-costs shortest path problem is to apply the algorithm of shortest path `sssp()` n times for each vertex in the digraph G. The complexity would be O(*n*^3). For the all-costs problem, we can obtain a conceptually simpler algorithm that will work even if some edges in G have negative weights, as long as G has no cycles with negative lengths. The computing time will still be O(n^3), although the constant factor will be smaller.
2. The digraph G is represented as a cost adjacency matrix with `cost[i][i] = 0` and `cost[i][j] = MAXINT`, in case edge `<i,j>`, `i != j` is not in G.
3. We define `Ak[i][j]` to be the shortest path from `i` to `j` going through no intermediate vertex of index greater than `k`. Then, `An[i][j]` will be the cost of the shortest `i` to `j` path in G, since G contains no vertex with an index greater than n. `A0[i][j]` is `cost[i][j]`.
4. The basic idea in the algorithm is to successively generate matrices `A0, A1, ...`, An. If we have already generated `A(k-1)`, then we may generate `Ak` by realizing that for any pair of vertices `i`, `j` either:
   - the shortest path from `i` to `j` going through no vertex with index greater than `k` does not go through the vertex with index `k`, and so its cost is `A(k–1)[i][j]`; or
   - the shortest such path does go through vertex `k`. Such a path consists of a path from `i` to `k` and another one from `k` to `j`. These paths must be the shortest paths from `i` to `k` and from `k` to `j` going through no vertex with index greater than `k-1`, and so their costs are `A(k-1)[i][k]` and `A(k-1)[k][j]`.

   Note that this is true only if G has no cycle with negative length containing vertex `k`. If this is not true, then the shortest `i` to `j` path going through no vertices of index greater than `k` may make several cycles from `k` to `k`, and thus have a length substantially less than `A(k-1)[i][k]+A(k-1)[k][j]`.

ABC Amber CHM Converter Trial version, http://www.processtext.com/abcchm.html

So, we have the following formulas:

```
Ak[i][j] = min{ A(k-1)[i][j], A(k-1)[i][k]+A(k-1)[k][j] },
k > 0
```

and

```
A0[i][j] = cost[i][j]
```

5. **Example:** Let the graph be as shown here.

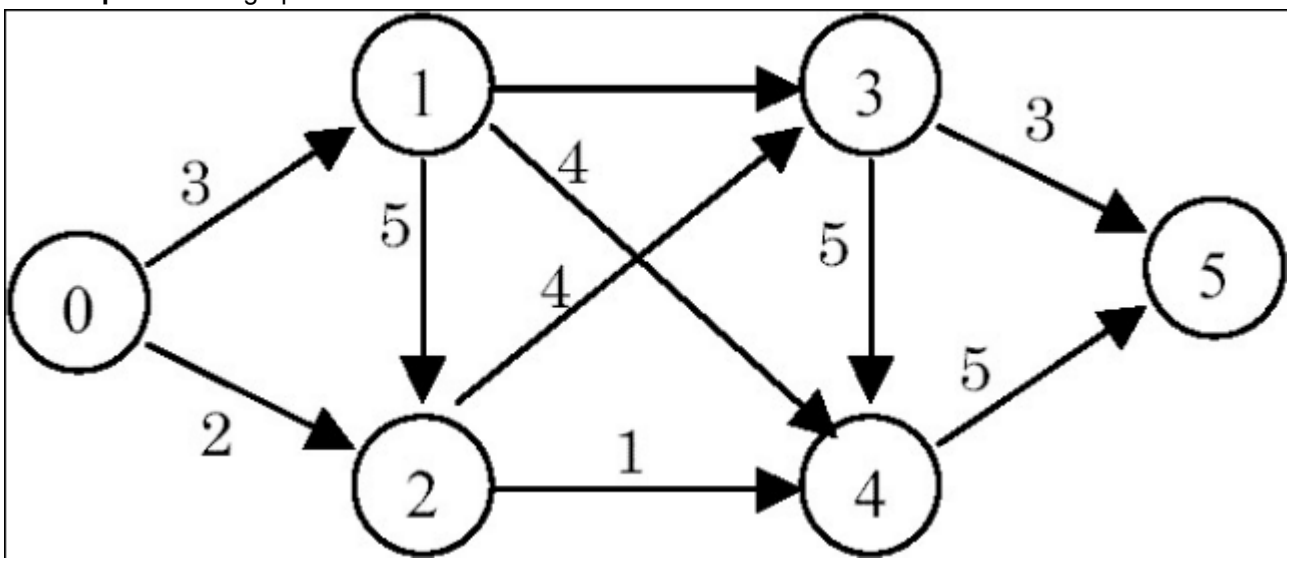

Here, n = 6. The values of `Ak, 0<=k<6` are shown next. `M` signifies `MAXINT`.

$$A0 = \begin{matrix} 0 & 50 & 10 & M & 45 & M \\ M & 0 & 15 & M & 10 & M \\ 20 & M & 0 & 15 & M & M \\ M & 20 & M & 0 & 35 & M \\ M & M & M & 30 & 0 & M \\ M & M & M & 3 & M & 0 \end{matrix}$$

$$A1 = \begin{matrix} 0 & 50 & 10 & M & 45 & M \\ M & 0 & 15 & M & 10 & M \\ 20 & 70 & 0 & 15 & 65 & M \\ M & 20 & M & 0 & 35 & M \\ M & M & M & 30 & 0 & M \\ M & M & M & 3 & M & 0 \end{matrix}$$

$$A2 = \begin{matrix} 0 & 50 & 10 & M & 45 & M \\ M & 0 & 15 & M & 10 & M \\ 20 & 70 & 0 & 15 & 65 & M \\ M & 20 & 35 & 0 & 30 & M \\ M & M & M & 30 & 0 & M \\ M & M & M & 3 & M & 0 \end{matrix}$$

ABC Amber CHM Converter Trial version, http://www.processtext.com/abcchm.html

$$A3 = \begin{matrix} 0 & 50 & 10 & 25 & 45 & M \\ 35 & 0 & 15 & 30 & 10 & M \\ 20 & 70 & 0 & 15 & 65 & M \\ 55 & 20 & 35 & 0 & 30 & M \\ M & M & M & 30 & 0 & M \\ M & M & M & 3 & M & 0 \end{matrix}$$

$$A4 = \begin{matrix} 0 & 45 & 10 & 25 & 45 & M \\ 35 & 0 & 15 & 30 & 10 & M \\ 20 & 35 & 0 & 15 & 45 & M \\ 55 & 20 & 35 & 0 & 30 & M \\ 85 & 50 & 65 & 30 & 0 & M \\ 58 & 23 & 38 & 3 & 33 & 0 \end{matrix}$$

$$A5 = \begin{matrix} 0 & 45 & 10 & 25 & 45 & M \\ 35 & 0 & 15 & 30 & 10 & M \\ 20 & 35 & 0 & 15 & 45 & M \\ 55 & 20 & 35 & 0 & 30 & M \\ 85 & 50 & 65 & 30 & 0 & M \\ 58 & 23 & 38 & 3 & 33 & 0 \end{matrix}$$

An entry in `A5[i][j]` gives the minimum path length from vertex `i` to `j`.

Points to Remember

1. The complexity of the algorithm `allCosts()` is O(*n*^3).
2. Different options should be considered before implementation, as we did for this problem. This can result not only in getting an efficient algorithm but also in effectively handling special cases.
3. See how the problem of size `k` is recursively defined in terms of a problem of size `k-1`.

Previous Next

ABC Amber CHM Converter Trial version, http://www.processtext.com/abcchm.html

Chapter 29: Miscellaneous Problems

PROBLEM: THE TWO-CLASS CLASSIFICATION PROBLEM

Given a training data set having two classes and the functional form of the decision boundary between them, find the decision boundary of that form that best separates the two classes. Assume that a linear decision boundary will be used to classify samples into two classes, and that each sample has M features.

Program

```
#include <stdio.h>

typedef enum {FALSE,  TRUE}  bool ;

int computeD(int  *x, int n, int Jw)  {
   /*
    * compute the value of the discriminant function D using the xis and wis.
    * D =  w0 +  w1x1 +  w2x2 +  ... + wnxn.
    */
   int i;
   int d =  w[0];

   for(i=1;  i<=n; ++i)
       d +=  w[i]*x[i];

   return d;
}

int signum(int  d)  {
   /*
    * signum(d)  =  1 if d>=0
    *            =  -1 otherwise.
    */
   if(d  = 0)
      return 1;
   return -1;
}
void updateW(int  *x, int n, int *w,  const int c, const int k, int d) {
   /*
    * update the ws as the discriminant function was different than the class
    * value.
    * wi +=  cdxi for 1<=i<=n.
    * w0 +=  cdk.
    */
```

ABC Amber CHM Converter Trial version, http://www.processtext.com/abcchm.html

```
   int i;

   w[0]  +=  c*d*k;

   for(i=l;  i<=n; ++i)
      w[il  +=  c*d*x[il;
}

void printHeader(int  n)  {
   /*
    * print header of the output
    */
   int i;

   for(i=l;  i<=n; ++i)
       printf ("x%d\t", i) ;
   printf ("d\t");
   for(i=0;  i<=n; ++i)
       printf("old w%d\t", i) ;
   printf("D\tError?\t") ;
   for(i=0;  i<=n; ++i)
       printf("new  w%d\t", i);
   printf ("\n");
}

int findK(FILE  *fp, int n)  {
    int tempk, k=0, count=0;
int i;

while(fscanf(fp,  "%d", &tempk) == 1)  {  // x1.
    k +=  tempk;
    for(i=2;  i<=n; ++i)  {// x2 to xn.
            fscanf(fp,  "%d", &tempk);
            k +=  tempk;
    }
    fscanf(fp,  "%d", &tempk);  // d.
    count++ ;
}
k /=  count*n;
k =  abs(k);

return k;
}
```

ABC Amber CHM Converter Trial version, http://www.processtext.com/abcchm.html

```
void printArray(int  *xorw, int n) {
   /*
    * print xorw[0.  .n-1].
    */
   int i;

   for(i=0;  i<n; ++i)
       printf("%d\t",  xorw[i]);
}

int main() {
    int *x, *w;
    int n, i, D;
    const int c=l;
    int k =  0, tempk, count =  0;
    bool  wChanged =  TRUE;
    FILE  *fp =  fopen("adb.dat", "r");

    fscanf(fp,  "%d", &n);
    x =  (int *)malloc((n+l)*sizeof(int));  //  1 d +  n xs.
    w =  (int *)calloc(n+l,  sizeof(int));  //  n(w)  =  n(x)  +  1.

    //  make first pass in the file to calculate value of k.
    k =  findK(fp, n);
    printf("n=%d, k=%d. \n",  n, k) ;
    //  now print the header.
    printHeader (n) ;
    //  now the loop until  there is no change in ws in any iteration.

    while(wChanged)  {
        wChanged  =  FALSE;
        fseek(fp, 0L, SEEK_SET) ;
        fscanf(fp,  "%d", &n); //  again read it.

        //  the xs are stored as d followed by n xs.
        //  the ws are stored as w0, w1, ...,  wn.
        //  thus xi  and wi  have the same indices.

        //  now read each row.
        while(fscanf(fp,  "%d", x+1) == 1) { // x1.
               for(i=2; i<=n; ++i)  // x2 to xn.
                       fscanf(fp,  "%d", x+i);
               printArray(x+1,  n);    //  print xis.
               fscanf(fp,  "%d", x);   // the d value.
```

ABC Amber CHM Converter Trial version, http://www.processtext.com/abcchm.html

```
                printf ("%d\t",  x[0]);
                printArray(w,  n+1);    //  print old wis.

                D =  computeD(x,  n, w);
                printf("%d\t", D);
                if(signum(D)  !=  x[0])  {
                        wChanged =  TRUE;
                        updateW(x, n, w, c, k, x[O]);
                        printf ("yes\t");
                }
                else
                        printf ("no\ t");
                printArray(w,  n+l);  //  print new wis.
                printf ("\n");
        }
    }
    fclose(fp);

    return 0;
}
```

Explanation

1. If the discriminant function is of the form `D = w0 + w1x1 + ... + wMxM`, then `D = 0` is the equation of the decision boundary between the two classes. The weights `w0, w1, ..., wM` are to be chosen to provide good performance on the training set. A sample with feature vector `x = (x1, ..., x2)` is classified into one class, say class `1` if `D >= 0`, and into the other class, say class `–1` if `D < 0`. Geometrically, `D = 0` is the equation of a hyperplane decision boundary that divides the M-dimensional feature space into two regions. Two classes are said to be linearly separable if there exists a hyperplane decision boundary such that `D > 0` for all the samples in class `1`, and `D < 0` for all the samples in class `–1`.
2. The adaptive decision boundary algorithm consists of the following steps:
   a. Initialize the weights `w0, ..., wM` to zero or to small random values or to some initial guesses. Choosing good initial guesses for the weights will speed convergence to a perfect solution if one exists.
   b. Choose the next sample `x = (xl, ..., xM)` from the training set. Let the true class of desired value of `D` be `d`, so that `d = 1` or `–1` represents the true class of `x`.
   c. Compute `D = w0 + w1x1 + ... + wMxM`.
   d. If `signum(D) != d`, replace `wi` by `wi + cdxi`, for `i = 1, ..., M`, where `c` is a positive constant that controls the step size for weight adjustment. `signum(D) == 1` if `D >= 0` and `signum(D) == –1` if `D < 0`. Also replace `w0` by `w0 + cdk` where `k` is a positive constant. If `signum(D)` == `d`, then no change in the weights should be made. We take `k` to be the average absolute value of all the features for fast convergence.
   e. Repeat steps `b` through `d` with each of the samples in the training set. When finished, run through the entire training data set again. Stop and report perfect classification when all the samples are correctly classified during one complete pass of the entire training set through the training procedure. An additional stopping rule is also needed since this process would never terminate if the two classes were not linearly separable. A fixed maximum number of iterations could be tried, or the algorithm could be terminated when the running average error rate ceases to decrease significantly. We assume that the classes are linearly separable.
3. The data is read from a file. The first line of the file should contain a single number n signifying the number of features. From line 2 onwards, each line contains n+l numbers representing one

sample. It contains n feature values followed by the class value (`1` or `–1`). One pass of the file is done in `findK()` to find the average absolute value of the features to be assigned to the constant `k` for fast convergence to the solution, if it exists. `main()` then contains a loop that runs as long as there is at least one misclassification in the whole data set. The inner `while` loop reads every sample and stores the vector `x` in an array `x[]` from indices 1 to *n*. `x[0]` stores the class value d. `w[0 . . n]` is another array that stores the values of weights `w0, ..., wn.` Initially, all `ws` are set to zero. The function `computeD()` computes the value of the discriminant function `D` by using `x[]` and `w[]`. We then check whether `signum(D)` == class value d. If they are equal, nothing is done; otherwise, `w[]` vector is changed as given in the preceding algorithm. The function `printArray()` prints a vector.

4. Example: Let the training file be
   1
   –4 –1
   –1 1.
   This means there is only one feature and there are two samples. In the first, the value of `x1` is –4 and its class is –1. The second contains the value of `x1` as –1, and its class is 1.
   Let `c = 1.`
   k = average absolute value of features = `abs((–4–1)/2)` = `abs(–2)` = `2. w0 = w1 = 0.`
   Using the first sample x1 = –4 results in D = w0 + w1x1 = 0 + 0(–4) = 0, where we have arbitrarily assigned the sign of 0 to be 1. However, d = –1, so the sample is misclassified and we adapt the weights as follows:
   W0 = W0 + cdk = 0 + 1(–1)2 = –2.
   w1 = w1 + cdx1 = 0 + 1(–1)(–4) = 4.
   The algorithm is repeated until both samples are correctly classified.
   Different steps of the algorithm are as follows:

step	x1	d	old w0	old w1	D	Error?	new w0	new w1
1	–4	–1	0	0	0	yes	–2	4
2	–1	1	–2	4	–6	yes	0	3
3	–4	–1	0	3	–12	no	0	3
4	–1	1	0	3	–3	yes	2	2
5	–4	–1	2	2	–6	no	2	2
6	–1	1	2	2	0	no	2	2

Points to Remember

1. One way to assure a sort of convergence, even when the classes are not linearly separable, is to replace the constant `c` by a variable step size that decreases with the number of iterations. However, convergence to a decision boundary that best separates the classes is not guaranteed when the classes are not linearly separable.
2. Nonlinear decision boundaries that are more complex than hyperplanes can also be found by this adaptive technique.
3. If there are more than two classes, but each pair of classes is linearly separable, then the same algorithm can be used to find the boundary between each two pairs of classes.

Previous Next

ABC Amber CHM Converter Trial version, http://www.processtext.com/abcchm.html

PROBLEM: THE *N*-COINS PROBLEM

Given a string of 0s and 1s as tails and heads obtained from tossing n coins of arbitrary biases, find the (approximate) points where the change of coin could have taken place.

Program

```
#include <stdio.h>
#include <math.h>

#define  MINGROUPSIZE 10
#define  EPSILON 0.08

int adjustPartition(int *a, int n, double *p, int m, int i)  {
    /*
     * slide the partition boundary from i  forward or backward to get
     * better partition and return the index of the last element in the
     * partition.
     * i  >=  1.
     */
    int aindex =  i*MINGROUPSIZE;
    int j, startj =  aindex-MINGROUPSIZE/4, finalj = aindex+MINGROUPSIZE/4 ;
    int k;
    int ones, nelem;

    for(k=(i  - 1)*MINGROUPSIZE,  nelem=0; k<startj; ++k, ++nelem)
        ones +=  a[k];
    // the bias of the coin uptil  now here is ones/nelem.

    for(j=startj; j<final j; ++j) {
         ones +=  a[j];  ++nelem;
         if (fabs (ones/ (double) nelem- p[  i ] ) >=  EPSILON)  //  found the
partition.
               break;
    }
    return j;
}

int findChange(int  *a, int n, double *p, int m)  {
   /*
    * the running probabilities are given in p[m].
    * find the points of coin change from them.
    */
   int i;
```

ABC Amber CHM Converter Trial version, http://www.processtext.com/abcchm.html

```
   for(i=l;  i<m; ++i)  {
       if(fabs(p[i]-p[i-l])  >=  EPSILON)  //  found the change.
            return adjustPartition(a, n, p, m, i);
   }
   return -1;
}

int findProb(int *a, int n, double *p)  {
   /*
    * find the average probabilities of groups in a[n]  and store in p.
    */
   int i, j=-1, k, ones, nelem;

   for(i=0;  i<n; ++i,  ++nelem)  {
       if(i%MINGROUPSIZE  = 0)
           ones=0,  nelem=0,  ++ j ;
       p[j]  =  (a[il=l  ?  ++ones, ones/(double)(nelem+l)  :  ones/
(doubl e) (nelem+l
));
   }
   return j+l;
}

void printAverage(int  *a,  int partindex)  {
    /*
     * print average of this new partition a[O.  .partindex-1;
     */
   int ones =  0, i;

   for(i=O;  i<partindex; ++i)
       ones +=  a[i];
   printf("average  =  X.21 f .\n", ones/(double)partindex);
}

void findPartition(int *a, int n, double *p, int startoff) {

   int m =  findProb(a, n, p);
   int partindex =  findChange(a, n, p, m);

   if(partindex  !=  _1) {
        printf("partiti0n  at %d.\n", startoff+partindex) ;
        printAverage(a,  partindex);
        findPartition(a+partindex,  n _ partindex, p, startoff+partindex);
   }
```

ABC Amber CHM Converter Trial version, http://www.processtext.com/abcchm.html

```
   else
       printAverage(a, n);
}
int main() {
    int a[]  =  {0,0,0,  1,0,0,0,1,1,1,1,1,0,1,1,1,1,0,0,
0,0,1,0,0,1,0,0,0,1,0};
    double *p;
    int n =  sizeof(a)/sizeof(int);
    int m;

    p = (doubl e *)ma1  1 oc((n+MINGROUPSIZE – 1) /
MINGROUPSIZE*sizeof(double);
    findPartition(a, n, p, 0);

    return 0;
}
```

Explanation

1. Consider the following input string:
2.
3. `0,0,0,1,0,0,0,1,1,1,1,1,0,1,1,1,1,0,0,0,0,1,0,1,0,0,0,1,0,0,1,0,0,1,0,0,0,1,0.`

   Visually, we may partition it as follows:

   ```
   0,0,0,1,0,0,0  1,1,1,1,1,0,1,1,1,1
   0,0,0,0,1,0,1,0,0,0,1,0,0,1,0,0,1,0,0,0,1,0.
   ```

   We define bias of a coin as the probability of tossing a head (1).
   Thus, bias of coin 1 = 1/7 = 0.14.
   bias of coin 2 = 9/10 = 0.9.
   bias of coin 3 = 6/22 = 0.27.

   Thus, we have to find such partitions in the input string.

   Note two extreme cases. First, there was a single coin whose bias is 16/39 = 0.41. Second, there were 39 coins with biases equal to their outcomes (0 or 1). These conclusions are valid but of no practical importance. What we are interested in are patterns of 0s and 1s that appear uniformly over a length of the string.
4. Since this is a problem with an approximate solution, there can be various ways to get an answer. We have chosen the following strategy. We partition the elements (0s and 1s) into various groups of a fixed size `MINGROUPSIZE` (perhaps except the last group) and find the average biases of each group. We then compare adjacent group biases, and if the difference in the biases is >= an error term `EPSILON`, we know that these two partitions have different patterns, and so a possible change of coin took place somewhere near the boundary between the two partitions. We then try to shift the boundary by some fixed amount and find a suitable partition point. Thus, we found out one possible change of coin. We run this algorithm recursively to find the next partitions in the input.
5. The function `findPartition()` is the driver function. It calls `findProb()` to group the elements of the input string into various partitions and find their average biases. It then calls `findChange()` to check whether there are consecutive biases having a difference of >= `EPSILON`. The function `findChange()` returns –1 if there is no such change. Otherwise, it calls `adjustPartition()` to make a smooth change to the partition index for better accuracy. The function `adjustPartition()` slides the end of the partition from `-MINGROUPSIZE/3` to `0`

to `+MINGROUPSIZE/3` across the original boundary and stops as soon as the difference in the biases of the original partition and the sliding partition is `>= EPSILON`. The function `printAverage()` is a dummy function used to print values required for understanding and debugging.

6. Example: Let `MINGROUPSIZE=10` and `EPSILON=0.08`.

For this input string, the function `findProb()` groups the elements into the following partitions having the given biases:
group 0 = 0,0,0,1,0,0,0,1,1,1 bias = 4/10 = 0.4.
group 1 = 1,1,0,1,1,1,1,0,0,0 bias = 6/10 = 0.6.
group 2 = 0,1,0,1,0,0,0,1,0,0 bias = 3/10 = 0.3.
group 3 = 1,0,0,1,0,0,0,1,0 bias = 319 = 0.33.

The first call to `findChange()` tells that there is a change of `>= EPSILON` between group 0 and group 1. Thus, the partition wall is assumed between the two groups. This wall is shifted from its position from negative to positive direction in the function `adjustPartition()`. The offset within which this is done is fixed at `MINGROUPSIZE/4`. If the difference between the average bias of the partition before this wall and the average bias of the partition before the original partition wall becomes `>= EPSILON`, then the partition wall is fixed at that point.

Thus the first partition is fixed at index 8, and is 0,0,0,1,0,0,0,1 with average bias of 2/8 = 0.25.

The remaining array is then partitioned recursively in a similar manner. Thus we get the remaining partitions as 1,1,1,1,0,1,1,1 with average bias of 7/8 = 0.88 and
1,0,0,0,0,1,0,1,0,0,0,1,0,0,1,0,0,1,0,0,0,1,0 with average bias of 7/23 = 0.3.

Points to Remember

1. One can find an input string that can fool this algorithm for a fixed group size `MINGROUPSIZE` and error term `EPSILON`.
2. There will be greater accuracy if some adaptive algorithm is used that will refine the partitions.
3. This algorithm can be used in noise detection and correction of the input signal.

Previous Next

ABC Amber CHM Converter Trial version, http://www.processtext.com/abcchm.html

PROBLEM: ALL COMBINATIONS OF STRINGS

Write a program to print all the combinations of a string.

Program

```
#include <stdi0.h>

#define  MAXLEN  80

void init(char  *answer, int slen) {
    /*
     * initialize first slen entries in answer[]  to 0.
     */
   int i;

   for(i=O; i<slen; ++i)
       *answer++ =  0;
   *answer =  0;  //  eos.

}

void printComb(char  *s,  int slen, char "answer) {
    /*
     * fixes a character of s and then calls printComb0 recursively
     * to get all  combinations of the remaining chars.
     */
   int i;
   static int count =  0;

   if(*s  = 0) {
       count++;
       printf("%2d:  %s.\n", count, answer);
       return;
   }
   for(i=O; i<slen; ++i)
       if(answer[i]  = 0) {
           answer[i]  = *s;
           printComb(s+l, slen, answer);
           answer[il = 0;
       }
}

int main() {
```

```
    char s[MAXLEN];
    char answerCMAXLEN];

    printf("Enter  characters for combination: ");
    gets(s-1;

    while(*s) {
         init (answer, strlen (s));
         printComb(s,  strlen(s),  answer);
         printf ("Enter characters for combination(press enter to end): ");

         gets(s);
    }
    return 0;
}
```

Explanation

1. Consider an input string `abc`. Various combinations of this string are `abc, acb, bac, cab, bca`, and `cba`. To generate these combinations, we once again make use of recursion.
2. Note that combinations of the string `"abc"` are obtained by fixing character `'a'` at different positions and finding combinations of string `'bc'`. Fixing `'a'` at a position means, in the answer string, the character 'a' will occur at a fixed position. Similarly, combinations of string `'bc'` can be found by fixing character `'b'` at different positions and finding combinations of string `'c'`. If string `'c'` has only one combination, we get the following:
3.
4. `comb('c') = c.`
5. `comb('bc') = bc  /* character 'b' fixed at position 1. */`
6. `  and cb /* character 'b' fixed at position 2. */`
7. `comb('abc')  = a fixed at different places in comb('bc').`
8. `  =  abc and acb /* character 'a' fixed at position 1. */`
9. `and bac and cab  /* character 'a' fixed at position 2. */`
10. `and bca and cba  /* character 'a' fixed at position 3. */`
11. The program repeatedly asks for a string until the entered string is empty and calls `printComb()`. `printComb()` fixes the position of a character and calls `printComb()` recursively for the remaining string.
12. The complexity of `printComb()` can be easily derived from the following recurrence relation:

    T(n) = n*T(n–1).

    This is because, for finding combinations of a string of length *n*, we fix the position of a character at a position out of *n* possible positions and then find combinations of the remaining (*n*–1) characters. After solving the equation, we get the complexity of `printComb()` 1 as O(*n*!).

Points to Remember

1. The complexity of `printComb()` is O(n!) where n is the length of the input string .
2. A simple recursive procedure, such as `printComb()`, can solve a larger problem in an elegant manner.
3. Care should be taken to end a string with `'\0'`, as done in function `init()`.

Previous Next

ABC Amber CHM Converter Trial version, http://www.processtext.com/abcchm.html

PROBLEM: THE 8-KNIGHTS PROBLEM

Solve the problem of a knight's tour without backtracking. Assume that it starts from a corner of the chessboard.

Program

```
#include <stdio.h>

#define M 8
#define NDIR 8 // no of directions.

typedef enum {FALSE, TRUE} bool ;

int rowchange[]  = {-2,  -1, 1, 2, 2,  1, -1, -2};
int colchange[]  =  {-1, -2, -2,  -1, 1, 2, 2, 1};

void printMatrix(int a[][M], int n)  {
    /*
     * print the final solution.
     */
   int i, j;

   for(i=0; i<n; ++i) {
        for(j=0; j<n; *j)
               printf("%2d ", a[i][j]);
        printf("\n");
   }

}

int getCost(int a[][M], int row, int col, int n) {
   /*
    * find the number of positions which can be visited from a[row][col].
    */
   int i;
   int count = 0;

   if(!(row>=0 &&  row<n &&  col=0 &&  col<n && a[row][col]=FALSE))
      return NDIR+1;

   for(i=0; i<NDIR; ++i) {
       int newrow =  row+rowchange[i] ;
       int newcol =  col+colchange[i];
```

ABC Amber CHM Converter Trial version, http://www.processtext.com/abcchm.html

```
        if(newrow>=0 &&  newrow<n &&  newcol>=0 &&  newcol<n && a[newrow]
[newcol ]=FALSE)
                count++ ;
    }
    return (count ?  count :  NDIR+l);

}

void knight(int a[][M], int n, int row, int col, int num) {
     /*
      * find the next position in a of size n*n.
      * next position is the position from where min number of positions
      * can be reached.
      * current position is (row, col): unmarked.
      */
    int mincost =  NDIR+2;    // infinity.
    int mindir =  _1;
    int i;
        a[row][col] = num;
        if(num = n*n)
            return;
        for(i=O; i<NDIR; ++i) {
            int newrow =  row+rowchange[i];
            int newcol =  col+colchange[i];
            int cost =  getCost(a, newrow, newcol, n);

            if(cost < mincost)
                   mincost=cost, mindir=i ;
       }
       knight(a, n, row+rowchange[mindir], col+col change[mindit_1, num+l);
}

int main() {
     int a[M][M] ;  //here you have to initialize matrix
     int i=0, j=0;
     for(i=0; i<M; i++)
       for(j=0; j<M; j++)
     a[i][j]=0 ;

     knight(a, M, 0, 0, 1);
     printMatrix(a, M);

     return 0;
}
```

ABC Amber CHM Converter Trial version, http://www.processtext.com/abcchm.html

Explanation

1. On an 8 × 8 chessboard, a knight can travel two-and-a-half positions at a time. The problem is to start from a corner of the chessboard and visit all 64 positions without visiting any position more than once. This travel is called a knight's tour.
2. There is more than one way to solve this problem. We implement here the strategy suggested by J.C. Warnsdorff in 1823. His rule is that the knight must always be moved to one of the positions from which the minimum number of not-yet-visited positions can be traversed.
3. The knight can visit one of the eight (at most) positions from a fixed position. Those are shown in Figure 29.1. It is possible that the number of positions that can be traversed is less than eight, depending on the chessboard boundaries and visit of the knight to other squares.

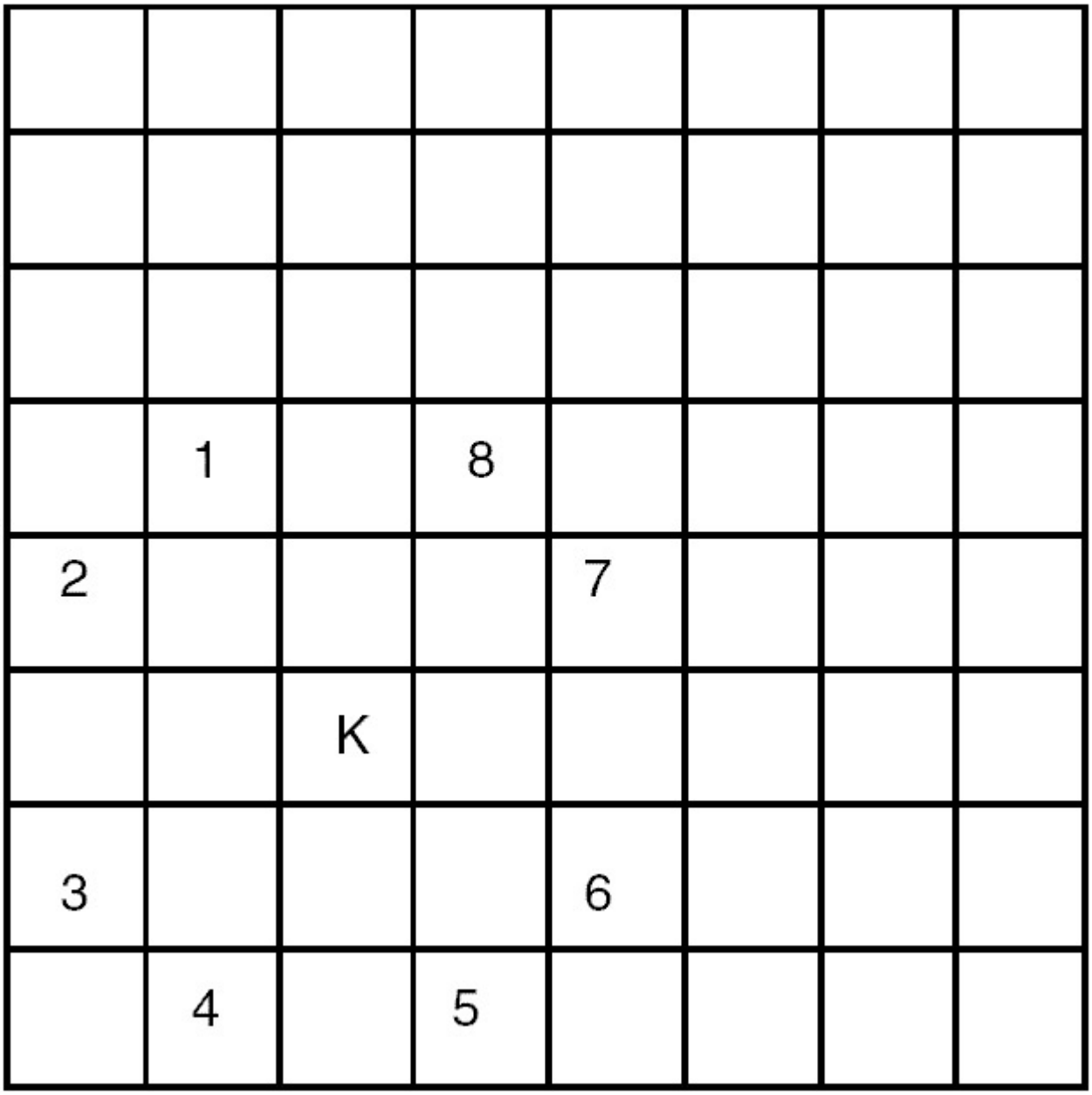

Figure 29.1: A knight can move to a maximum of eight positions.

If the board is represented (naturally) by 8x8 matrix of integers `a[8] [8]`, and if the current position of the knight is `a[i][j]`, then the next position could be one the eight: `a[i–2][j–1], a[i–1][j–2], a[i+1][j–2], a[i+2][j–1], a[i+2][j+1], a[i+1][j+2], a[i–1][j+2], a[i–2][j+1]`. We maintain two arrays of these changes in row and column in `rowchange[8]` and `col change[8]`. Thus, if the current position is `a[i][j]`, then the next position in direction `d`, `1<=d<=8`, as shown in the figure, is given by `a[i+rowchange[d–1]][ j+colchange[d–1]]`.

4. The program initializes the array by zeros and calls function `knight()` with the values of (row.

column) as (0, O), which forms the first position of the knight. Then, for each of the eight directions we find the new position `a[newrow][newcol]` using the rule in Number 3. From each of these entries, we find the number of positions to which the knight can travel `(getCost())`. We select the minimum of such values and call `knight()` recursively for that position and so on until we finish all the squares. As we visit a position, we mark it to print the path at the end of the traversal.

Points to Remember

1. The knight's tour can be solved with backtracking by the trial-and-error method in which we select the next move randomly, and, if we find it to be non-feasible, we backtrack and try another direction. Its complexity is exponential.
2. The problem of the knight's tour can also be solved without backtracking in O($N \times N$) time where N is the size of the chessboard.
3. There are other heuristics available that can solve the problem of the knight's tour with only a little backtracking.
4. Note how maintaining two vectors `rowchange[]` and `colchange[]` avoids the use of a long `switch` statement containing `8` cases, and keeps the code concise.

Previous Next

ABC Amber CHM Converter Trial version, http://www.processtext.com/abcchm.html

PROBLEM: *N*-QUEENS PROBLEM

Solve the *N*-queens problem in which in an array of *N*×*N* positions, *N* queens are placed such that no two queens are in attacking positions.

Program

```
#include <stdio.h>
#define N 10

typedef enum {FALSE, TRUE} bool ;

void printMatrix(int a[][N], int n) {
    /*
     * print one solution.
     */
   int i, j;

   for(i=0; i<n; ++i) {
       for(j=0; j<n; ++j)
              printf("%d ", a[i][j]);
       printf("\n");
   }
   //getchar();
   printf("\n");
}

int getMarkedCol(int a[][N], int n, int row) {
    /*
     * returns the column marked in row
     */
    int j;

    for(j=0;  j<n; ++j)
        if(a[row][j] == TRUE)
                return j;
    printf("ERR0R:  No col marked in the row %d.\n", row);
    return -1;
}
bool  feasible(int  a[] [N]],  int n, int row, int col) {
    /*
     * checks whether next queen can be kept at a[row][col].
     */
    int i;
```

ABC Amber CHM Converter Trial version, http://www.processtext.com/abcchm.html

```
    int markedCol ;

    for(i=0; i<row; ++i) {  // for all rows before this row.
        markedCol = getMarkedCo1 (a, n, i );
        if(markedCo1 = col || abs(row-i) = abs(co1 -markedCol))
                return FALSE ;
    }
    return TRUE;
}

void NQueens(int a[][N], int n, int row) {
    /*
     * solve n-queens problem. the solution is obtained using matrix a.
     * the procedure is recursive. current row being considered is row.
     * that means all the rows from 0 to row-1 are considered.
     */
    int j;

    if(row < n) {
        for(j=0; j<n; ++j)   // for each col.
                if(feasible(a, n, row, j)) {
                        a[row][j] = TRUE;
                        NQueens (a, n, row+l);
                        a[row][j] = FALSE;
                }
}
else
    printMatrix(a, n);
}

int main() {
    int a[Nl[Nl ;
    int i=0, j=0;
    for(i=0; i<8; i++)
     for(j=0; j<8; j++)
     a[i][j]=0;
    NQueens(a, 8, 0);

    return 0;
}
```

Program Description

1. The $N \times N$ positions are naturally represented by using an $N \times N$ array `a[N][N]` of integers (even an array of Boolean is sufficient). A value of `0 (FALSE)` of `a[i][j]` indicates absence of a queen in row `i` and column `j`, while a value of `1 (TRUE)` indicates her presence.

2. Two queens are in attacking position if they are in the same row, column, or diagonal. Thus, queens placed at `a[1][2]` and `a[7][2]` are attacking as they are in the same column (2). Similarly, `a[1][2]` and `a[5][6]` are attacking positions as they are present on the same diagonal. Thus, the positions `a[i][j]` and `a[k][l]` are attacking if:
   - `i` = `k`, or
   - `j` = `1`, or
   - `abs(i -k)` == `abs(j-1)` where `abs(0)` returns the absolute value of a number.
3. The program starts by initializing the array `a[][]` by `0`. It then recursively calls function `NQueens()` to place each queen in the next rows. Thus in each recursive call to `NQueens()`, one queen is placed at the non-attacking position. Our aim is not to find a single solution but to find all the combinations of positions in which the *N* queens can be placed. So we repeat it for each column of the array. Thus, the algorithm is as follows:
4.
5. `NQueens (row) {`
6. `    if(row < N) {`
7. `        for j=0 to N-1`
8. `        if(feasiblePosition(row, j)) {`
9. `            a[row][j] = TRUE; // queen placed.`
10. `            NQueens(row+l);`
11. `a[row][j] = FALSE; // queen removed from this row.`
12. `        }`
13. `}`
14. `else {`
15. `              printMatrix();`
16. `    }`
17. `}`

The function `feasibleSolution(row, col)` simply checks whether the next queen can be put at `a[row][col]`. This is done by checking whether none of the previously placed queens are attacking this queen.

18. The complexity of `NQueens()` is O(*N*!) if it finds all solutions. This can be derived easily from the following recurrence relations:

T(*N*) = *N**(*N*⊥2+T(*N*–1))

and

T(1) = 1.

The complexity of `feasibleSolution()` is O(*N*^2). It can be made O(*N*) by maintaining a vector of columns in which the queens are placed.

Points to Remember

1. Once again a recursive procedure has played the trick of solving an apparently larger problem easily, by dividing a problem of size *N* into a problem of size *N* – 1.
2. By separating the procedure `feasiblesolution()`, the function `NQueens()` itself looks like the algorithm. This suggests the usefulness of writing a pseudo-code before the implementation details.
3. The complexity of `NQueens()` is O(N!).

Previous Next

ABC Amber CHM Converter Trial version, http://www.processtext.com/abcchm.html

PROBLEM: MAPPING OF *N*-QUEUES IN AN ARRAY

Design a data representation sequentially mapping N-queues into an array `nqueue[0...N-1]`. Represent each queue as a circular queue within the array. Write functions `qAdd()`, `qDelete()`, `qIsFull()` for this representation.

Program

```
#i nclude <stdio.h>

#define N 50                    // combined size of all queues.
#define NQ 5                    // number of queues.
/* ASSUMPTION : NQ is a divisor of N. */

#define ILLEGALINDEX -1             // illegal index - - for special cases.
#define EINDEXOUTOFBOUND -1 // error code on overflow in the queue.
#define SUCCESS 0                   // success code.

typedef int type;                   // type of each data item.

type nqueue[N];             // queue implemented using array.
int front[NQ]; // points to first element in the queue.
int rear[NQ];  // points to last element in the queue.

void qInit() {
    /*
     * initialize front[] to contain ILLEGALINDEX.
     * ILLEGALINDEX specifies empty queue.
     */
    int i;
    for(i=0; i<NQ; ++i ) {
        front[i] = ILLEGALINDEX;
    }
}

int qAdd(int queue, type data ) {
    /*
     * adds 'data' at the end of queue.
     */
    int maxelem, nelem;

    if(queue < 0 || queue >= NQ )  // invalid queue number.
       return EINDEXOUTOFBOUND;
```

ABC Amber CHM Converter Trial version, http://www.processtext.com/abcchm.html

```
    maxelem = N/NQ;
    nelem = qGetNElements(queue );
    if(nelem == 0 ) {     // empty queue.
        front[queue] = rear[queue] = maxelem*queue;
}
    else if(nelem == maxelem )    // queue full.
        return EINDEXOUTOFBOUND;
    else
        rear[queue] = (rear[queue]+l)%maxelem + maxelem*queue;

    printf("inserting at %d\n", rear[queue] );
    nqueue[rear[queue]] = data;
    return SUCCESS;
}

int qGetNElements(int queue ) {
    /*
     * returns no of elements in queue.
     */
    int start, end;

    if(front[queue] = ILLEGALINDEX )    // queue empty.
       return 0;
    if(front[queue] <= rearqueue )
       return rearqueue-front[queue]+l;

    start = N/NQ*queue;
    end   = N/NQ*(queue+l);

    return (end-front[queue]) + (rear[queue]-start+l);
}

int qDelete(int queue ) {
    /*
     * removes front element of queue.
     */
    int nel em = qGetNElements(queue);
    printf("deleting from queue %d.. .\n", queue );
    if(nelem == 0 )  // empty queue.
        return EINDEXOUTOFBOUND;
    else if(nelem == 1 )   // last element getting deleted.
        front [queue] = ILLEGALINDEX;
    else
        front[queue] = (front[queue]+l)%(N/NQ) + N/NQ*queue;
```

ABC Amber CHM Converter Trial version, http://www.processtext.com/abcchm.html

```
    return SUCCESS;
}

int qIsFull(int queue ) {
    /*
     * returns 1 if queue is full, otherwise 0.
     */
    return (qGetNElements(queue) == N/NQ );
}

void qPrint(int queue ) {
    /*
     * prints the queue.
     */
    int nelem = qGetNElements(queue);
    int maxelem = N/NQ;
    int start = maxelem*queue;
    int i;

    for(i=0; i<nelem; ++i )
        printf("%d ", nqueue[(front[queue]+i)%maxelem+start] );
    printf("\n" );
}
int main() {
    qInit();
    printf("nelem of 3=%d\n", qGetNElements(3) );
    qAdd(3,0);
    qPrint(3);
    qDelete(3);
    qPrint(3);
    printf("nelem of 3=%d\n", qGetNElements(3) );
    qAdd(3,1);
    qAdd(3,2);
    qAdd(3,3);
    qPrint(3);
    qDelete(3);
    qPrint(3);
    qAdd(3,4);
    qAdd(3,5);
    qAdd(3,6);
    qAdd(3,7);
    qAdd(3,8);
    qPrint(3);
    qDelete(3);
```

ABC Amber CHM Converter Trial version, http://www.processtext.com/abcchm.html

```
    qPrint(3);
    qAdd(3,9);
    qPrint(3);
}
```

Explanation

1. Along with the array `nqueue[]`, front and rear indices for each queue are maintained in arrays `front[0...NQ-1]` and `rear[0...NQ-1]`. `front[i]` signifies the first element in queue `i`. The maximum number of elements in each queue is *N/NQ*. It is assumed that *NQ* is a divisor of *N*. The index of the first element in queue `i` is given by the formula *N/NQ**i.
2. The program starts by initializing the front and rear of all the queues to a sentinel value `(–1)`. The number of elements in queue `i` is calculated as follows:

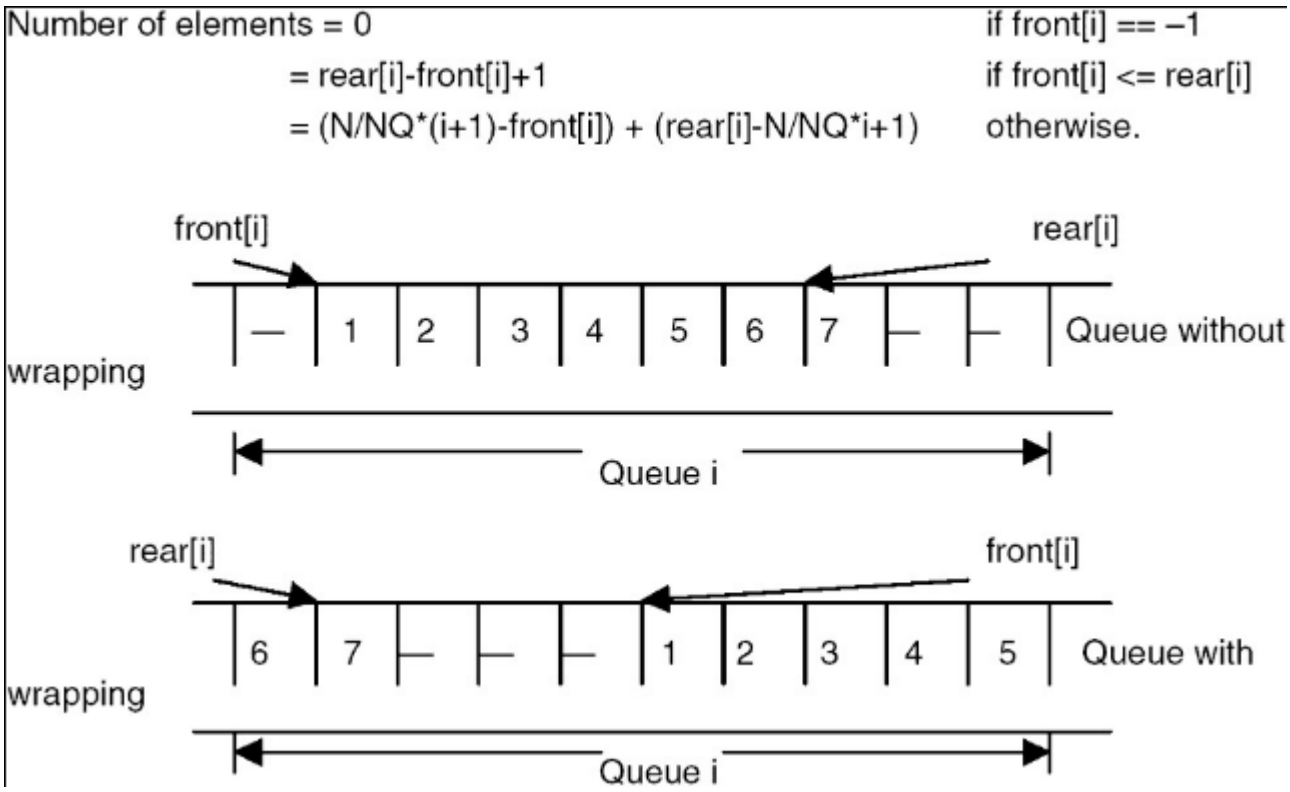

3. The function `qAdd(queue, data)` adds data to the end of the queue. It checks for a valid queue number `(0...N/NQ-1)` and queue-overflow condition. If space is available for the new element in the queue, then `rear[queue]` is incremented and the new element is inserted at the position. The end condition that the queue was initially empty is also checked as it needs updation of `front[queue]`. It is possible for `rear[queue]` to get wrapped to *N/NQ**queue.
4. The function `qDelete(queue)` removes the front element of the queue. It checks for underflow by using the number of elements in the queue. If the element being deleted is the last element of the queue, `rear[queue]` is also updated. Otherwise, only `front[queue]` points to the next element in the queue. It is possible for `front[queue]` to get wrapped to *N/NQ**queue.
5. The function `qIsFull(queue)` checks whether there is any space for a new element. It is implemented by calculating the number of elements in the queue.

Points to Remember

1. The index of the first element in queue `i` is calculated as `(i*` size of each queue).
2. The complexity of insertion and deletion as described is O(1). Instead, if we do not allow wrapping of elements, then every deletion will cost shifting of elements. That will keep insertion O(1) but deletion would become O(*n*) where *n* is the number of elements in the queue.
3. Since all the queues operate on distinct memory areas, the logic of functions remains the same as in a single queue implementation, except that the calculations are w.r.t. the index of the first element in the queue, compared to an assumed zero for the single queue case.
4. Note how a single procedure `qGetNElements(i)`, which returns the number of elements in

queue `i`, simplifies corner cases of insertion and deletion, and also simplifies the function `qIsFull()`.

Previous Next

ABC Amber CHM Converter Trial version, http://www.processtext.com/abcchm.html

PROBLEM: IMPLEMENTATION OF A* ALGORITHM

Given *n* integers and a sum *m*,write a program to find the set of integers summing to *m* by using the `A*` algorithm.

Program

```
#include <stdio.h>

typedef enum {FALSE, TRUE} bool;

int subsetsum(int *a, int n, int sum, bool *selected, int startoff) {
    /*
     * for those elements a[i] which have selected[i] = FALSE,
     * solve subsetsum problem for sum.
     * the elements before startoff are of no use.
     */
    int i:

    if(sum = 0)
        return TRUE;
    for(i=startoff; i<n; ++i)
        if(selected[i] = FALSE && a[i] <= sum) {
            selected[i] = TRUE;
            if(subsetsum(a, n, sum-a[i], selected, i+l))
                return TRUE;
            selected[i] = FALSE;
        }
    return FALSE;
}

int subsetsumori(int *a, int n, int sum) {
    /*
     * check whether there is any subset in a[n] having sum sum.
     */
    int i;

    for(i=0; i<n; ++i)
        if(a[i] == sum || (a[i] < sum && !subsetsumori(a+i+l, n-i-1, sum-a
[i])))
{
            printf("%d ", a[i]);
            return 0;
        {
```

ABC Amber CHM Converter Trial version, http://www.processtext.com/abcchm.html

```
    return 1;
}
int compare(void *el, void *e2) {
    /*
     * function used in qsort(0).
     * returns values <0, ==0, >0 if e2 is <el, ==el, >el.
     * thus we need elements in non-ascending order.
     */
     return *(int *)e2-*(int *)el;
}
void printAnswer(int *a, int n, bool "selected) {
    /*
     * print those a[i] which have selected[i] = TRUE.
     */
    int i;

    for(i=0; i<n; ++i)
        if (selected[i])
             printf("%d ", a[i]);
    printf ("\n");
}

int main() {
    int a[] = (5, 3, 4, 8, 9, 6);
    int sum = 15;
    int size = sizeof(a)/sizeof(int);
    bool *selected = (bool *)calloc(size, sizeof(boo1));    // init with
FALSE.

    qsort(a, size, sizeof(int, compare);
    if(subsetsum(a, size, sum, selected, 0))
        printAnswer(a, size, selected);

    return 0;
}
```

Explanation

1. Inputs are an array `a[]` of *n* integers and the sum as another integer. We need to find out a subset of `a[]` that has the sum of its elements equal to sum. This problem is called a 'subset sum problem.'
2. The `A*` algorithm is an A1 technique which chooses the best of the available options to proceed. It uses heuristics that apply to most real-world situations but do not guarantee the best solution. We use the heuristic that courses the element not nearest to the required sum to be added to the current sum.
3. The list of elements in array `a[]` is sorted in non-ascending order using the `qsort()` library function. `main()` then calls `subsetsum()`. The function `subsetsum()` uses the Boolean array `selected[n]`, where `selected[i]` indicates whether `a[i]` was included in the sum.

ABC Amber CHM Converter Trial version, http://www.processtext.com/abcchm.html

The recursive algorithm of `subsetsum()` follows.

```
boolean subsetsum(a[], n, sum, selected[], startoffset) {
    if(sum == 0)
   return TRUE;
    for i=startoffset to n-1
        if(selected[i] == FALSE && a[i] <= sum) {
    selected[i] = TRUE;
    if(subsetsum(a, n, sum-a[i], selected, i+l) == TRUE)
        return TRUE;
    selected[i] = FALSE;
        }
    return FALSE;
}
```

Thus, if an element has not yet been selected and it is less than the sum, then we choose it and call `subsetsum()` recursively for the remaining sum by using the elements after this element. The variable `startoffset` is used to indicate the start of elements which may be of interest to add to the current sum. Since `a[i]` is selected, no element before `a[i+l]` will be of interest because all of them are more than `a[i]`, and so are either already selected or greater than the sum. Remember that the elements are in non-increasing order and the sum in different invocations of `subsetsum()` is also non- increasing. When the sum reaches 0, it indicates the termination condition.

18. But where in the algorithm have we used the `A*` algorithm? It is used by first sorting the list in non-increasing order and then traversing it from the highest to the lowest elements. This way, at every step, we choose the option which is nearest to the required sum. If it fails, we deselect the option and choose another option.
19. Example:
    Let `a[]` = `{5,3,4,8,9,6}` and sum = 10.
    `selected[] = {FALSE, FALSE, FALSE, FALSE, FALSE, FALSE}`. `a[]` is sorted to {9,8,6,5,4,3} and subsetsum(a, 6,10, selected, 0) is called. `subsetsum()` loops over elements 0 to 5 of a.
    for `i=0, selected[O] = TRUE i.e. a[O] = 9` is selected and subsetsum(a, 6, 10-9, selected, 0+1) is called.
    `subsetsum()` loops over elements 1 to 5 of a.
    for i=l, `a[l]` = 8 > sum 1.
    for i=2, `a[2]` = 6 > sum 1.
    …
    for i=5, `a[5]` = 3 > sum 1.
    So `subsetsum()` returns FALSE.
    Since `subsetsum()` returned `FALSE, selected[O]` = `FALSE`.
    for i=l, `selected[l]` = `TRUE` that is, `a[l] = 8` is selected and `subsetsum(a, 6, 10 -8, selected, 1+1)` is called.
    `subsetsum()` returns `FALSE` in the similar manner as above.
    for i=2, `selected[2]` = `TRUE`, i.e. `a[2] = 6` is selected and `subsetsum(a, 6, 10- 6, selected, 2+1)` is called.
    `subsetsum()` loops over elements 3 to 5 of a.
    for i=3, `a[3]` = 5 > sum 4.
    for i=4, `a[4]` = 4 <= sum 4.
    So `selected[4]` = `TRUE` that is `a[4]` = 4 is selected and `subsetsum(a, 6, 4-4, selected, 4+1)` is called.
    Since sum is 0, `subsetsum()` returns `TRUE`.
    Since `subsetsum()` returned `TRUE`, this `subsetsum()` returns `TRUE`.
    Since `subsetsum()` returned `TRUE`, this `subsetsum()` returns `TRUE` to `main()`. The function `printAnswer()` then prints the elements `a[i]` for which `selected[i] == TRUE`.

Points to Remember

1. The `A*` algorithm chooses the best possible of the currently available paths for the next

ABC Amber CHM Converter Trial version, http://www.processtext.com/abcchm.html

exploration of options.

2. `A*` algorithm uses a heuristic. So it does not guarantee the best outcome in all cases. However, in most of the instances of the problem, it is able to reach the solution faster than the algorithm generating all the combinations of the elements.
3. The complexity of `subsetsum()` is exponential.
4. By using the variable `startoff`, the search space is reduced.

Previous Next

ABC Amber CHM Converter Trial version, http://www.processtext.com/abcchm.html

Index

Symbols and Numbers

#if 76
#line 81
8-Knights Problem 680

ABC Amber CHM Converter Trial version, http://www.processtext.com/abcchm.html

Index

A

A* algorithm 692
Actual parameter 106
Address 63
Adjacency list 641
Adjacency matrix 637
Arithmetic operator 32
Array Representation 390
ASCII 475
Assignment operator 31
Automatic lifetime, of variables 115

Previous Next

ABC Amber CHM Converter Trial version, http://www.processtext.com/abcchm.html

Index

B

Base address 171
Binary representation, of integers 16
Binary search 213
Binary search tree 357
Binary tree Traversal 354
Breadth-first spanning tree 410
Breadth-first traversal 399
`break` Statement 54
`bsort` 193
Bubble sort 193
Build–initial–heap 209

ABC Amber CHM Converter Trial version, http://www.processtext.com/abcchm.html

Index

C

Calling function 113
`char` 19
Circular list 498
Circular queues 247
Collision handling 218
Comma operator 54
Complex structure 138
Contiguous list 171
`continue` statement 55
Control Statement 6
Control Structures 45

ABC Amber CHM Converter Trial version, http://www.processtext.com/abcchm.html

Index

D

Data types 13-17
Decimal number conversion from floating point 23
Define directive 72
Depth-first spanning tree 410
Depth-first traversal 396
Direct access files 156
direct-access file 147
Directed acyclic graph (DAG) 420
`do-while` loop 52
Dynamic memory allocations 123

ABC Amber CHM Converter Trial version, http://www.processtext.com/abcchm.html

Index

E

Encapsulation structure 46
Error directive 80
Error message 80
Escape Sequence 61
Escape sequence 20

ABC Amber CHM Converter Trial version, http://www.processtext.com/abcchm.html

Index

F

Field-width 69
First-in-first-out (FIFO) 260
File 147
Flags 60
Float family 15
Floating point conversion to decimal number 23
Floating-point numbers 21
`for` Loop 54
Forced conversion 26
Formal parameter 106
Function 101

ABC Amber CHM Converter Trial version, http://www.processtext.com/abcchm.html

Index

G

Garbage collection 513
Global variables 108

Previous Next

ABC Amber CHM Converter Trial version, http://www.processtext.com/abcchm.html

Index

H

Hash function methods of defining 218
Hashing 217
Heaps 192
Heapsort 206
Hexadecimal numbers 21

ABC Amber CHM Converter Trial version, http://www.processtext.com/abcchm.html

Index

I-J

`if` statement 46
`if-else if` statement 48
`if-else` statement 47
`ifdef` directive 73
`ifelif` 78
`ifelse` 77
`ifndef` 75
`include` directive 72
Increment operator 38
indexed sequential file 163
infix expression 241
Infix notation 236
`Inorder` 355
Integer family 15
Integers binary representation 16
Iteration loop 7
Iteration structure 45

ABC Amber CHM Converter Trial version, http://www.processtext.com/abcchm.html

Index

K

K-way `sort-merge` 455

ABC Amber CHM Converter Trial version, http://www.processtext.com/abcchm.html

Index

L

last-in first-out (LIFO) 260
left-shift operation 42
Linear open addressing 219
Linear probing 219
Linear search 210
Linked list 487
sorting 269
reversing 269
erasing 299
deleting a node 276
inserting a node 280
circular linked list 315
splitting 285
merging 321
Local variable 116
Local variables 102
Logical operator 35

ABC Amber CHM Converter Trial version, http://www.processtext.com/abcchm.html

Index

M

Macro 82
Matrix
transpose 184
saddle point 189
Memory allocation 140
Memory management 505
`merge sort` 201
Minimum spanning tree 627
Minimum-cost spanning tree 413
Modulus operator 32

ABC Amber CHM Converter Trial version, http://www.processtext.com/abcchm.html

Index

N

N equivalence classes 528
N-coins problem 673
n-dimensional array 167
N-queens problem 684
N-queues 687
null parameter 133
null terminator 133

ABC Amber CHM Converter Trial version, http://www.processtext.com/abcchm.html

Index

O

Octal numbers 21
One-dimensional array 167
Operator precedence 43
Overflow chaining 219

ABC Amber CHM Converter Trial version, http://www.processtext.com/abcchm.html

Index

P

Parameter passing 106
Placeholders 58
Pointers 64
Postfix expression 240
Precision 60
Precision 58
Prefix expression 241
Preorder 355
Preprocessor 71
Prim's algorithm 414
`printf` function 57
Programming 141

ABC Amber CHM Converter Trial version, http://www.processtext.com/abcchm.html

Index

Q

`qsort` 197
Queue 242
Quick sort 195

ABC Amber CHM Converter Trial version, http://www.processtext.com/abcchm.html

Index

R

Random access 148
Random-access data structure 167
Recursion 127
Recursive function 128
Recursive programs 267
Register variables 118
Rehashing 219
Relational operator 34
Right shift operation 43
Row-major representation 168

ABC Amber CHM Converter Trial version, http://www.processtext.com/abcchm.html

Index

S

Saddle point 189
of a matrix 439
`scanf` 67
`scanf` placeholder 68
Searching 192
Selection structure 45
Sequential file operations
open 147
read 147
write 147
close 147
Sequential mapping 167
Sequential search 210
Sequential structure 45
Singly linked circular list 325
Sorted list
merging 180
Sorting 192
Sparse matrices 308
Stack 103
Stack overheads 128
Stacks 227
applications 236
implementation using array 228
implementation using linked representation 231
push operation 228
pop operation 228
Static lifetime, of variables 115
Storage, of variables 115
String argument 67
String 133
Structure pointers 143
Structures 137
Swapping of left and right subtrees 367
`switch` Statement 50
Symbol table 217

ABC Amber CHM Converter Trial version, http://www.processtext.com/abcchm.html

Index

T

Target key 370
Ternary operator 37
The all-cost shortest path 661
Three-dimensional array 95
Topological sort 632
Trees 347
Two-class classification 667
Two-dimensional array 168
Type casting 27
Type conversion 25
Type indicators 68
Type prefixes 59
Type identifiers 58

ABC Amber CHM Converter Trial version, http://www.processtext.com/abcchm.html

Index

U

Unary operators 32
`undef` directive 72
Union 145

ABC Amber CHM Converter Trial version, http://www.processtext.com/abcchm.html

Index

V

Value 63

Previous Next

ABC Amber CHM Converter Trial version, http://www.processtext.com/abcchm.html

Index

W-Z

`while` loop 51

ABC Amber CHM Converter Trial version, http://www.processtext.com/abcchm.html

List of Figures

Chapter 18: Arrays, Searching, and Sorting

Figure 18.1: Representation of an array.

Figure 18.2: Row-major representation of a two-dimensional array.

Figure 18.3: Column major representation of a two-dimensional array.

Figure 18.4: Implementation of a static contiguous list.

Figure 18.5: A heap.

Figure 18.6: Hash table implementation using overflow chaining for collision handling.

Chapter 19: Stacks and Queues

Figure 19.1: Stack operations.

Figure 19.2: Linked stack.

Figure 19.3: Operations on a queue.

Figure 19.4: Circular queue.

Figure 19.5: Linked queue.

Chapter 20: Linked Lists

Figure 20.1: Sorting of a linked list.

Figure 20.2: A linked list showing the previous, current, and next nodes at some point during reversal process.

Figure 20.3: Sorting of a linked list.

Figure 20.4: Reversal of a list.

Figure 20.5: Before deletion.

Figure 20.6: After deletion.

Figure 20.7: Before insertion.

Figure 20.8: After insertion.

Figure 20.9: Insertion in a sorted list.

Figure 20.10: Polynomial representation.

Figure 20.11: A sparse matrix.

Figure 20.12: Linked list representation of sparse matrix of Figure 20.11.

Figure 20.13: Result of application of the procedure sadd.

Figure 20.14: A circular list.

Figure 20.15: (A) A circular list with head node, (B) an empty circular list.

Figure 20.16: List containing 2n nodes.

Figure 20.17: Splitting of a circular list.

Figure 20.18: A doubly linked list maintained as chain.

Figure 20.19: A doubly linked list maintained as a circular list.

Figure 20.20: A doubly linked list maintained as a circular list with a header node.

Figure 20.21: Before termination of process p1.

Figure 20.22: After termination of process p1.

Chapter 21: Trees

Figure 21.1: A tree structure.

Figure 21.2: A non-tree structure.

Figure 21.3: Binary tree structure.

Figure 21.4: Skewed trees.

Figure 21.5: A full binary tree.

Figure 21.6: A complete binary tree.

Figure 21.7: An array representation of a complete binary tree having 5 nodes and depth 3.

Figure 21.8: An array representation of a complete binary tree with 4 nodes and depth 3.

Figure 21.9: An array representation of a binary tree.

Figure 21.10: Linked representation of a binary tree.

Figure 21.11: A binary tree along with its inorder, preorder and postorder.

Figure 21.12: A binary tree of an expression along with its inorder and postorder.

Figure 21.13: Binary trees constructed using the given inorder.

Figure 21.14: A unique binary tree constructed using its inorder and postorder.

Figure 21.15: The binary search tree.

Figure 21.16: A unique binary tree constructed using the inorder and postorder.

Figure 21.17: A binary tree before deletion of a node pointed to by x.

Figure 21.18: A binary tree after deletion of a node pointed to by x.

Figure 21.19: A binary tree after deletion of a node pointed to by x.

Figure 21.20: A binary tree before deletion of a node pointed to by x.

Figure 21.21: A binary tree after deletion of a node pointed to by x.

Figure 21.22: A binary tree before deletion of a node pointed to by x.

Figure 21.23: A binary tree after deletion of a node pointed to by x.

Chapter 22: Graphs

Figure 22.1: Graphs.

Figure 22.2: The subgraph of graph G2.

Figure 22.3: Graph G.

Figure 22.4: Induced subgraph of Graph G of Figure 22.3.

Figure 22.5: A connected graph.

Figure 22.6: A completely connected graph.

Figure 22.7: Adjacency matrices.

Figure 22.8: Adjacency list of G_1.

Figure 22.9: Graph G and its depth first traversals starting at vertex 0.

Figure 22.10: Breadth-first traversal of graph G starting at vertex v1.

Figure 22.11: Connected component of G_1.

Figure 22.12: A diagraph.

Figure 22.13: Strongly connected components of the graph shown in Figure 22.12.

Figure 22.14: Graph G.

Figure 22.15: Depth first spanning tree of the graph of Figure 22.14.

Figure 22.16: Breadth-first spanning tree of the graph of Figure 22.14.

Figure 22.17: A directed graph G.

Figure 22.18: Depth-first spanning forest for the graph G of Figure 22.17.

Figure 22.19: A graph G.

Figure 22.20: Depth-first spanning tree of the graph G of Figure 22.19.

Figure 22.21: A graph G.

Figure 22.22: The minimum-cost spanning tree of graph G of Figure 22.21.

Figure 22.23: Directed acyclic graph.

Figure 22.24: DAG representation of expression (a+b)*c +((a+b) + e).

Figure 22.25: A graph G.

Chapter 29: Miscellaneous Problems

Figure 29.1: A knight can move to a maximum of eight positions.

Previous Next

ABC Amber CHM Converter Trial version, http://www.processtext.com/abcchm.html

List of Tables

Chapter 2: Data Types

Table 2.1: Integer data type storage allocations

Chapter 3: C Operators

Table 3.1: Comparing the equality operator (= =) with the '=' assignment operator.

Table 3.2: Results of AND, OR, and Negation.

Table 3.3: Operator precedence rules

Chapter 17: Files

Table 17.1: Random access

Chapter 19: Stacks and Queues

Table 19.1: Scanning the infex expression a*b+c/d from right to left

ABC Amber CHM Converter Trial version, http://www.processtext.com/abcchm.html

Back Cover

Divided into three separate sections, *C & Data Structures* covers C programming, as well as the implementation of data structures and an analysis of advanced data structure problems. Beginning with the basic concepts of the C language (including the operators, control structures, and functions), the book progresses to show these concepts through practical application with data structures such as linked lists and trees, and concludes with the integration of C programs and advanced data structure problem-solving. The book covers a vast range of data structures and programming issues, such as syntactic and semantic aspects of C, all control statements in C, concepts of function, macro, files and pointers with examples, graphs, arrays, searching and sorting techniques, stacks and queues, files, and preprocessing. *C & Data Structures* provides a comprehensive guide to all the data types in C with internal implementation, while providing examples to demonstrate their behavior.

KEY FEATURES

- Explains all operators, expressions, control statements, and rules of C in detail
- Demonstrates language syntax, as well as discussing its behavior by showing specific internal implementations
- Covers data structures such as linked lists, trees, graphs, arrays, and commonly used algorithms, as well as advanced data structures such as B- trees and B+ trees

About the Authors

P.S. Deshpande is a faculty member in the Department of Computer Science at Visvesvarya National Institute of Technology. He has acted as a consultant to various government and private organizations in the field of database management, software engineering, data warehousing, WAP, and J2EE design patterns, and has published a number of papers on Oracle, data warehousing, and programming languages.

O.G. Kakde is also a faculty member in the Department of Computer Science at Visvesvarya National Institute of Technology. He has done consulting work for the government as well as private organizations in the fields of embedded systems, language translators, WAP, and several programming languages. He is the author of Algorithms for Compiler Design.

ABC Amber CHM Converter Trial version, http://www.processtext.com/abcchm.html

Previous

CD Content

Following are select files from this book's Companion CD-ROM. These files are for your personal use, are governed by the Books24x7 Membership Agreement, and are copyright protected by the publisher, author, and/or other third parties. Unauthorized use, reproduction, or distribution is strictly prohibited.

Click on the link(s) below to download the files to your computer:

File	Description	Size
All CD Content		79,201

Previous