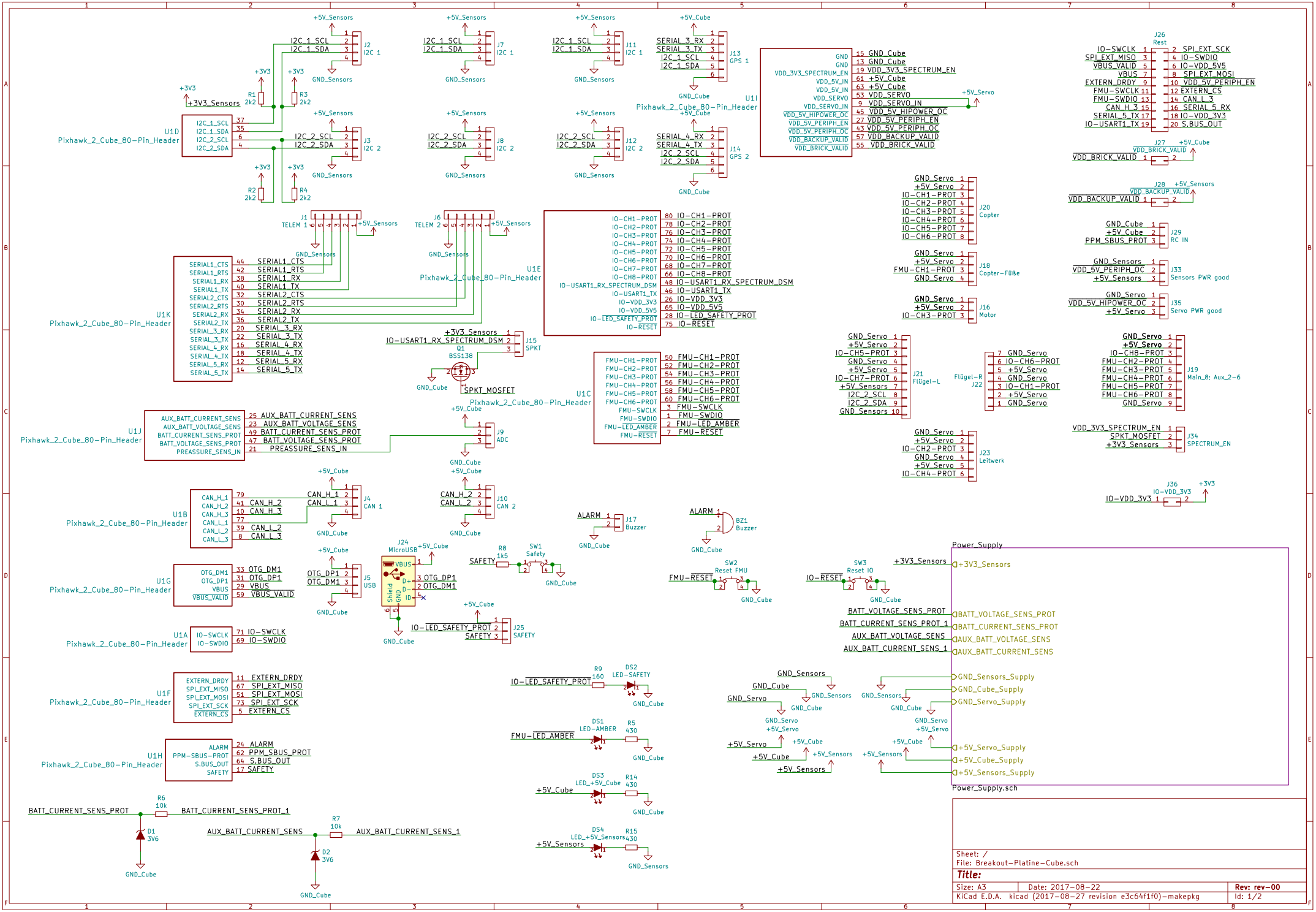
U1D
Pixhawk_2_Cube_80-Pin_Header
I2C_1_SCL
I2C_1_SDA
I2C_2_SCL
I2C_2_SDA
+3V3_Sensors
R1 2k2
R2 2k2
R3 2k2
R4 2k2
J2 I2C 1
J3 I2C 2
J7 I2C 1
J8 I2C 2
J11 I2C 1
J12 I2C 2
J13 GPS 1
J14 GPS 2
+5V_Sensors
GND_Sensors
+5V_Cube
GND_Cube
U1I
GND
VDD_3V3_SPECTRUM_EN
VDD_5V_IN
VDD_SERVO
VDD_SERVO_IN
VDD_5V_HIPOWER_OC
VDD_5V_PERIPH_EN
VDD_5V_PERIPH_OC
VDD_BACKUP_VALID
VDD_BRICK_VALID
+5V_Servo
J26 Rest
IO-SWCLK
SPI_EXT_MISO
VBUS_VALID
VBUS
EXTERN_DRDY
FMU-SWCLK
FMU-SWDIO
CAN_H_3
SERIAL_5_TX
IO-USART1_TX
SPI_EXT_SCK
IO-SWDIO
IO-VDD_5V5
SPI_EXT_MOSI
VDD_5V_PERIPH_EN
EXTERN_CS
CAN_L_3
SERIAL_5_RX
IO-VDD_3V3
S.BUS_OUT
J27 VDD_BRICK_VALID
J28 VDD_BACKUP_VALID
J1 TELEM 1
J6 TELEM 2
U1E
IO-CH1-PROT
IO-CH2-PROT
IO-CH3-PROT
IO-CH4-PROT
IO-CH5-PROT
IO-CH6-PROT
IO-CH7-PROT
IO-CH8-PROT
IO-USART1_RX_SPECTRUM_DSM
IO-USART1_TX
IO-VDD_3V3
IO-VDD_5V5
IO-LED_SAFETY_PROT
IO-RESET
J20 Copter
J18 Copter-Füße
J16 Motor
J29 RC IN
J33 Sensors PWR good
J35 Servo PWR good
U1K
Pixhawk_2_Cube_80-Pin_Header
SERIAL1_CTS
SERIAL1_RTS
SERIAL1_RX
SERIAL1_TX
SERIAL2_CTS
SERIAL2_RTS
SERIAL2_RX
SERIAL2_TX
SERIAL_3_RX
SERIAL_3_TX
SERIAL_4_RX
SERIAL_4_TX
SERIAL_5_RX
SERIAL_5_TX
J15 SPKT
Q1 BSS138
SPKT_MOSFET
U1C
FMU-CH1-PROT
FMU-CH2-PROT
FMU-CH3-PROT
FMU-CH4-PROT
FMU-CH5-PROT
FMU-CH6-PROT
FMU-SWCLK
FMU-SWDIO
FMU-LED_AMBER
FMU-RESET
J21 Flügel-L
J22 Flügel-R
J19 Main_8; Aux_2-6
J23 Leitwerk
J34 SPECTRUM_EN
J36 IO-VDD_3V3
U1J
AUX_BATT_CURRENT_SENS
AUX_BATT_VOLTAGE_SENS
BATT_CURRENT_SENS_PROT
BATT_VOLTAGE_SENS_PROT
PREASSURE_SENS_IN
J9 ADC
U1B
CAN_H_1
CAN_H_2
CAN_H_3
CAN_L_1
CAN_L_2
CAN_L_3
J4 CAN 1
J10 CAN 2
J17 Buzzer
BZ1 Buzzer
U1G
OTG_DM1
OTG_DP1
VBUS
VBUS_VALID
J5 USB
J24 MicroUSB
R8 1k5
SW1 Safety
SW2 Reset FMU
SW3 Reset IO
J25 SAFETY
U1A
IO-SWCLK
IO-SWDIO
U1F
EXTERN_DRDY
SPI_EXT_MISO
SPI_EXT_MOSI
SPI_EXT_SCK
EXTERN_CS
U1H
ALARM
PPM-SBUS-PROT
S.BUS_OUT
SAFETY
R9 160
DS2 LED-SAFETY
DS1 LED-AMBER
R5 430
DS3 LED_+5V_Cube
R14 430
DS4 LED_+5V_Sensors
R15 430
R6 10k
R7 10k
D1 3V6
D2 3V6
BATT_CURRENT_SENS_PROT_1
AUX_BATT_CURRENT_SENS_1
Power Supply
BATT_VOLTAGE_SENS_PROT
BATT_CURRENT_SENS_PROT_1
AUX_BATT_VOLTAGE_SENS
AUX_BATT_CURRENT_SENS_1
GND_Sensors_Supply
GND_Cube_Supply
GND_Servo_Supply
+5V_Servo_Supply
+5V_Cube_Supply
+5V_Sensors_Supply
Power_Supply.sch
Sheet: /
File: Breakout-Platine-Cube.sch
Title:
Size: A3
Date: 2017-08-22
Rev: rev-00
KiCad E.D.A. kicad (2017-08-27 revision e3c64f1f0)-makepkg
Id: 1/2

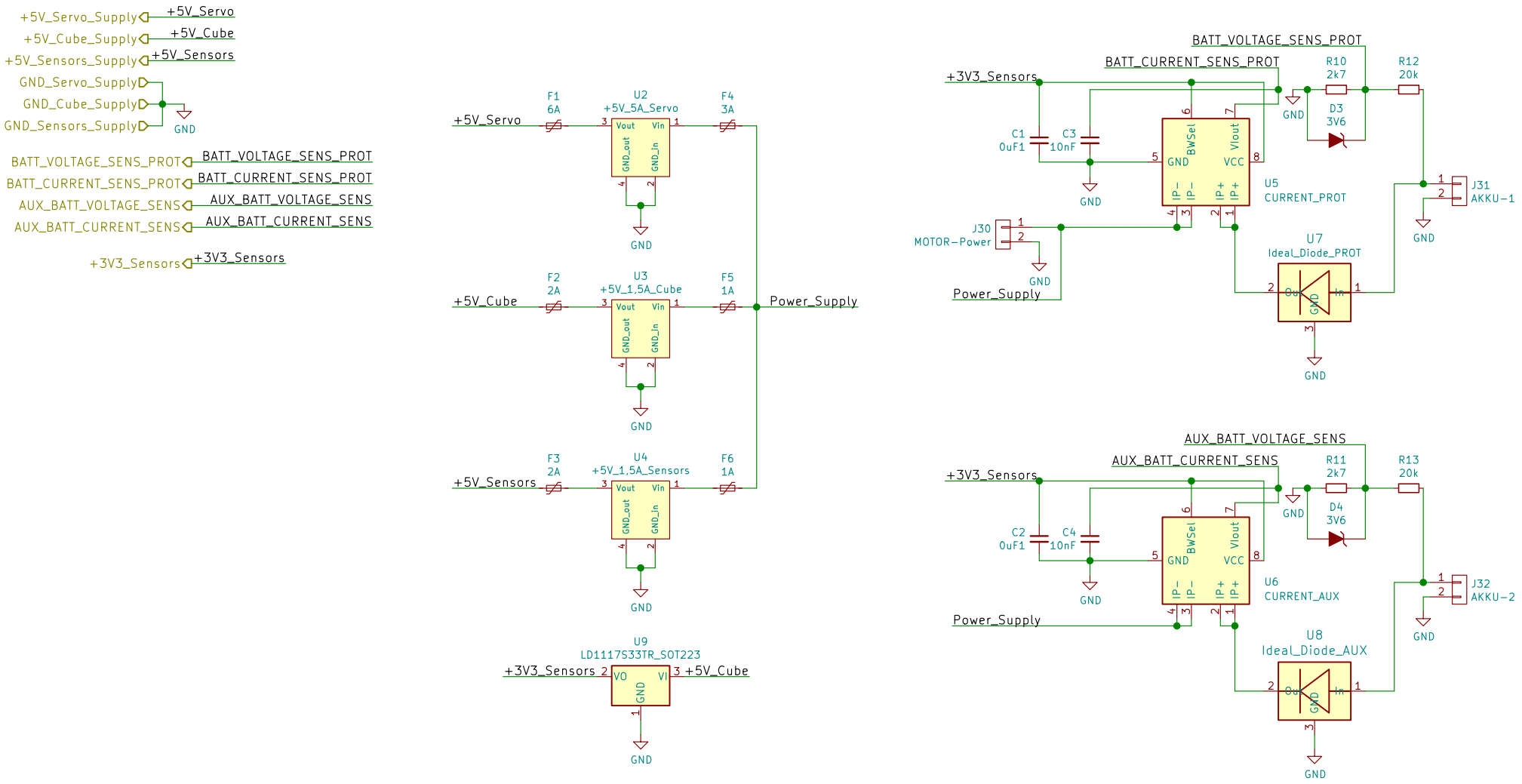

Sheet: /Power_Supply/
File: Power_Supply.sch

Title:

Size: A4	Date:	Rev:
KiCad E.D.A. kicad (2017−08−27 revision e3c64f1f0)−makepkg		Id: 2/2