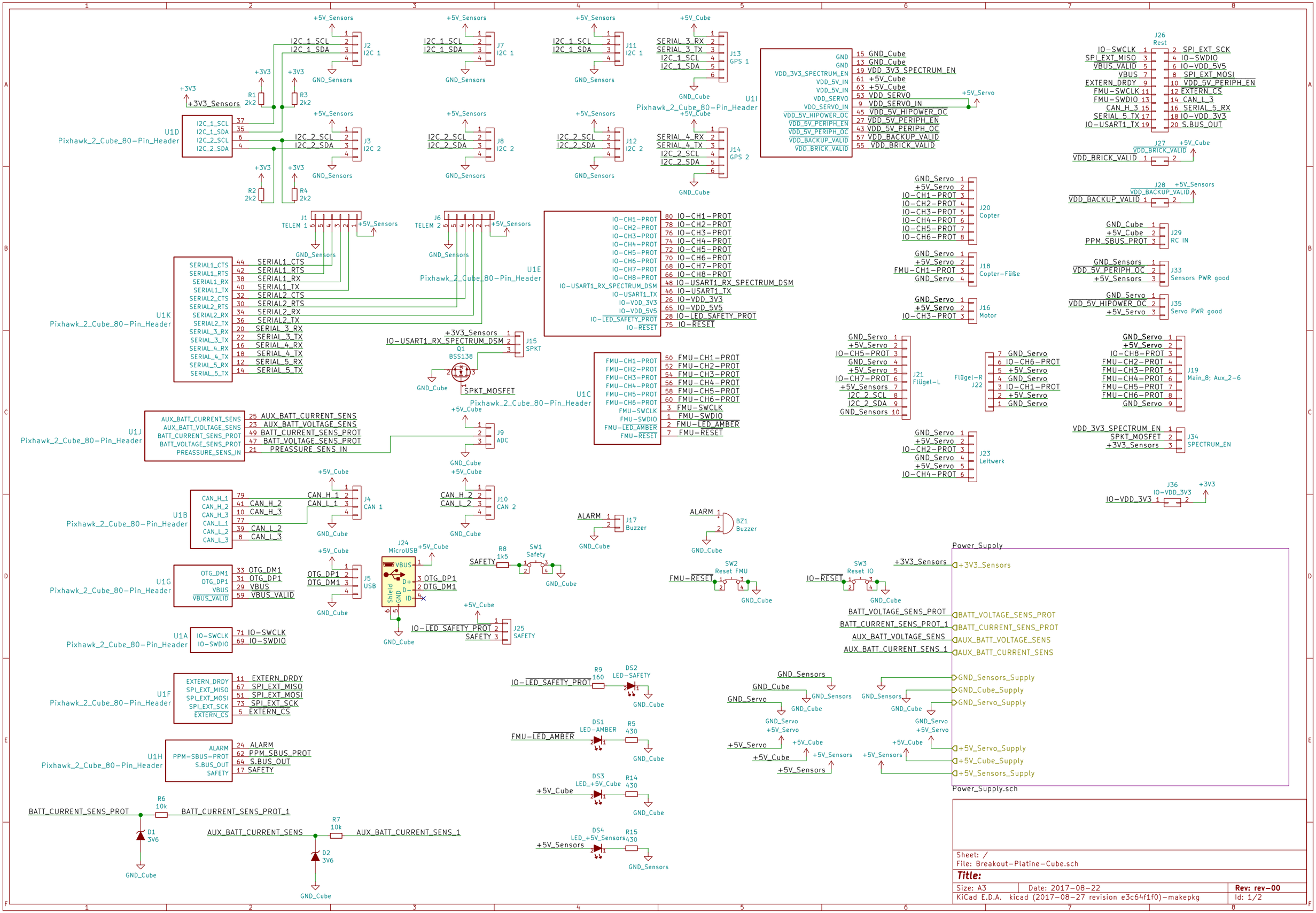
U1D Pixhawk_2_Cube_80-Pin_Header
I2C_1_SCL
I2C_1_SDA
I2C_2_SCL
I2C_2_SDA
+3V3_Sensors
R1 2k2
R2 2k2
R3 2k2
R4 2k2
J2 I2C 1
J3 I2C 2
J7 I2C 1
J8 I2C 2
J11 I2C 1
J12 I2C 2
J13 GPS 1
J14 GPS 2
U1I Pixhawk_2_Cube_80-Pin_Header
J26 Rest
J27 VDD_BRICK_VALID
J28 VDD_BACKUP_VALID
J20 Copter
J29 RC IN
J18 Copter-Füße
J33 Sensors PWR good
J16 Motor
J35 Servo PWR good
J21 Flügel-L
J22 Flügel-R
J19 Main_8; Aux_2-6
J23 Leitwerk
J34 SPECTRUM_EN
J36 IO-VDD_3V3
U1K Pixhawk_2_Cube_80-Pin_Header
J1 TELEM 1
J6 TELEM 2
U1E Pixhawk_2_Cube_80-Pin_Header
J15 SPKT
Q1 BSS138
SPKT_MOSFET
U1C Pixhawk_2_Cube_80-Pin_Header
U1J Pixhawk_2_Cube_80-Pin_Header
J9 ADC
U1B Pixhawk_2_Cube_80-Pin_Header
J4 CAN 1
J10 CAN 2
U1G Pixhawk_2_Cube_80-Pin_Header
J5 USB
J24 MicroUSB
U1A Pixhawk_2_Cube_80-Pin_Header
J25 SAFETY
R8 1k5
SW1 Safety
J17 Buzzer
BZ1 Buzzer
SW2 Reset FMU
SW3 Reset IO
U1F Pixhawk_2_Cube_80-Pin_Header
U1H Pixhawk_2_Cube_80-Pin_Header
R9 160
DS2 LED-SAFETY
DS1 LED-AMBER
R5 430
DS3 LED_+5V_Cube
R14 430
DS4 LED_+5V_Sensors
R15 430
R6 10k
D1 3V6
R7 10k
D2 3V6
Power_Supply
Power_Supply.sch
Sheet: /
File: Breakout-Platine-Cube.sch
Title:
Size: A3
Date: 2017-08-22
Rev: rev-00
KiCad E.D.A. kicad (2017-08-27 revision e3c64f1f0)-makepkg
Id: 1/2

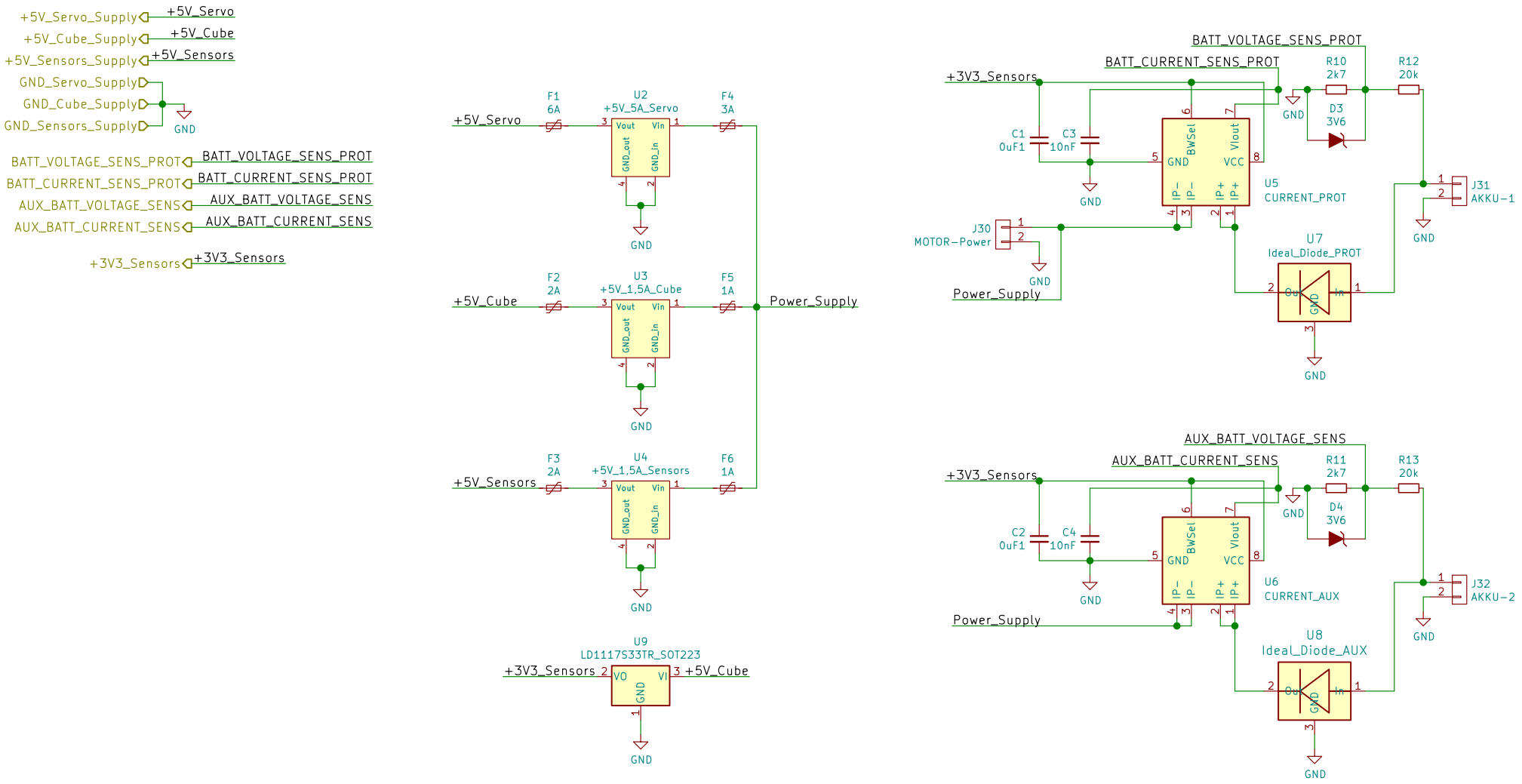

Sheet: /Power_Supply/
File: Power_Supply.sch

Title:

Size: A4	Date:	Rev:
KiCad E.D.A. kicad (2017−08−27 revision e3c64f1f0)−makepkg		Id: 2/2