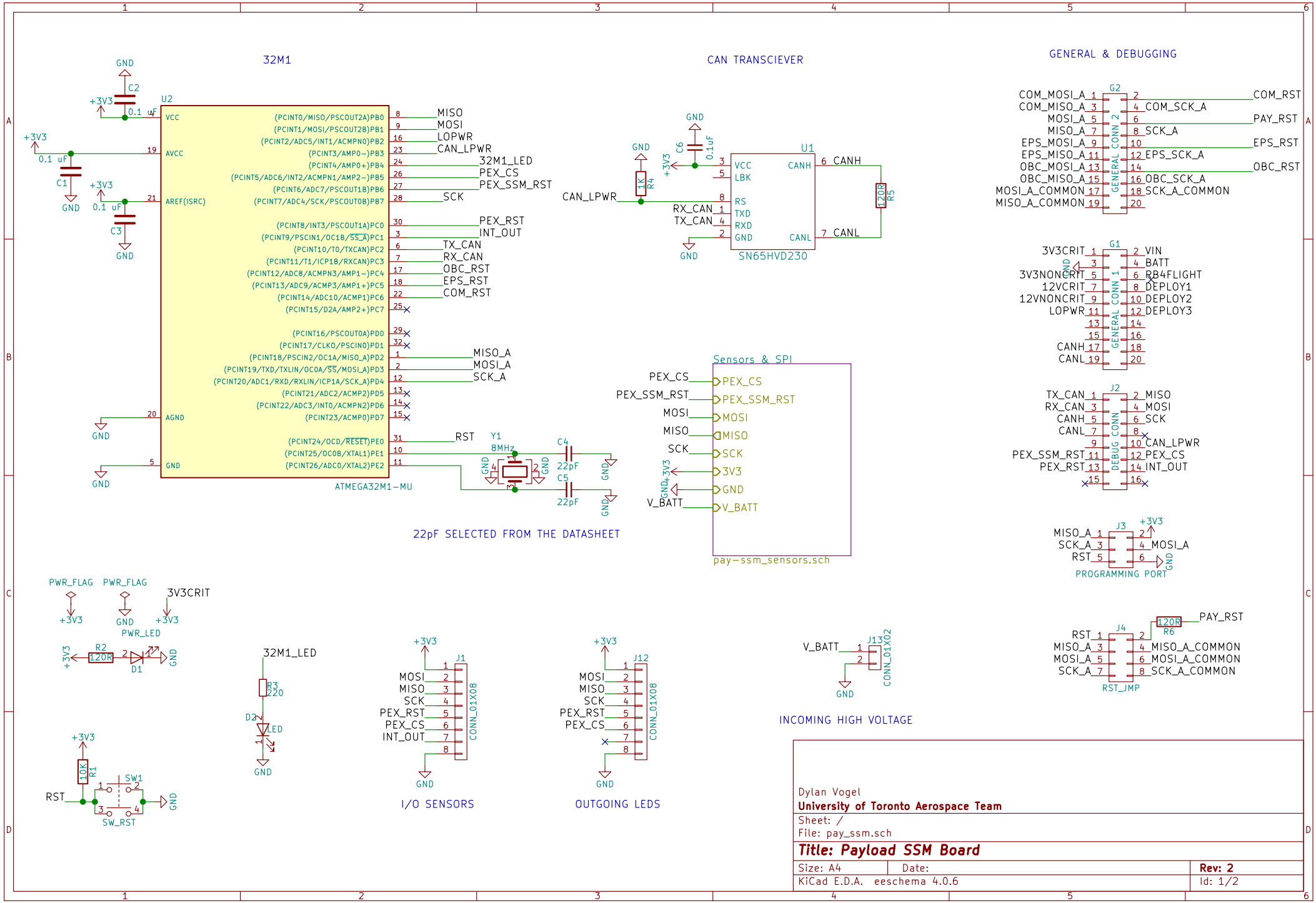
32M1
U2
ATMEGA32M1-MU
VCC
AVCC
AREF(ISRC)
AGND
GND
(PCINT0/MISO/PSCOUT2A)PB0
(PCINT1/MOSI/PSCOUT2B)PB1
(PCINT2/ADC5/INT1/ACMPN0)PB2
(PCINT3/AMP0-)PB3
(PCINT4/AMP0+)PB4
(PCINT5/ADC6/INT2/ACMPN1/AMP2-)PB5
(PCINT6/ADC7/PSCOUT1B)PB6
(PCINT7/ADC4/SCK/PSCOUT0B)PB7
(PCINT8/INT3/PSCOUT1A)PC0
(PCINT9/PSCIN1/OC1B/SS_A)PC1
(PCINT10/T0/TXCAN)PC2
(PCINT11/T1/ICP1B/RXCAN)PC3
(PCINT12/ADC8/ACMPN3/AMP1-)PC4
(PCINT13/ADC9/ACMP3/AMP1+)PC5
(PCINT14/ADC10/ACMP1)PC6
(PCINT15/D2A/AMP2+)PC7
(PCINT16/PSCOUT0A)PD0
(PCINT17/CLKO/PSCIN0)PD1
(PCINT18/PSCIN2/OC1A/MISO_A)PD2
(PCINT19/TXD/TXLIN/OC0A/SS/MOSI_A)PD3
(PCINT20/ADC1/RXD/RXLIN/ICP1A/SCK_A)PD4
(PCINT21/ADC2/ACMP2)PD5
(PCINT22/ADC3/INT0/ACMPN2)PD6
(PCINT23/ACMP0)PD7
(PCINT24/OCD/RESET)PE0
(PCINT25/OC0B/XTAL1)PE1
(PCINT26/ADC0/XTAL2)PE2
MISO
MOSI
LOPWR
CAN_LPWR
32M1_LED
PEX_CS
PEX_SSM_RST
SCK
PEX_RST
INT_OUT
TX_CAN
RX_CAN
OBC_RST
EPS_RST
COM_RST
MISO_A
MOSI_A
SCK_A
RST
Y1
8MHz
C4
C5
22pF
22pF SELECTED FROM THE DATASHEET
C1
C2
C3
0.1 uF
+3V3
CAN TRANSCIEVER
U1
SN65HVD230
VCC
LBK
CANH
RS
TXD
RXD
GND
CANL
CAN_LPWR
RX_CAN
TX_CAN
R4
1K
R5
120R
C6
0.1uF
Sensors & SPI
PEX_CS
PEX_SSM_RST
MOSI
MISO
SCK
3V3
GND
V_BATT
pay-ssm_sensors.sch
GENERAL & DEBUGGING
G2
GENERAL CONN 2
COM_MOSI_A
COM_MISO_A
MOSI_A
MISO_A
EPS_MOSI_A
EPS_MISO_A
OBC_MOSI_A
OBC_MISO_A
MOSI_A_COMMON
MISO_A_COMMON
COM_RST
COM_SCK_A
PAY_RST
SCK_A
EPS_RST
EPS_SCK_A
OBC_RST
OBC_SCK_A
SCK_A_COMMON
G1
GENERAL CONN 1
3V3CRIT
3V3NONCRIT
12VCRIT
12VNONCRIT
LOPWR
CANH
CANL
VIN
BATT
RB4FLIGHT
DEPLOY1
DEPLOY2
DEPLOY3
J2
DEBUG CONN
TX_CAN
RX_CAN
CANH
CANL
PEX_SSM_RST
PEX_RST
MISO
MOSI
SCK
CAN_LPWR
PEX_CS
INT_OUT
J3
PROGRAMMING PORT
MISO_A
SCK_A
RST
MOSI_A
J4
RST_JMP
RST
MISO_A
MOSI_A
SCK_A
MISO_A_COMMON
MOSI_A_COMMON
SCK_A_COMMON
R6
120R
PAY_RST
PWR_FLAG
3V3CRIT
PWR_LED
R2
120R
D1
32M1_LED
R3
220
D2
LED
R1
10K
SW1
SW_RST
J1
CONN_01X08
MOSI
MISO
SCK
PEX_RST
PEX_CS
INT_OUT
I/O SENSORS
J12
CONN_01X08
OUTGOING LEDS
V_BATT
J13
CONN_01X02
INCOMING HIGH VOLTAGE
Dylan Vogel
University of Toronto Aerospace Team
Sheet: /
File: pay_ssm.sch
Title: Payload SSM Board
Size: A4
Date:
Rev: 2
KiCad E.D.A. eeschema 4.0.6
Id: 1/2

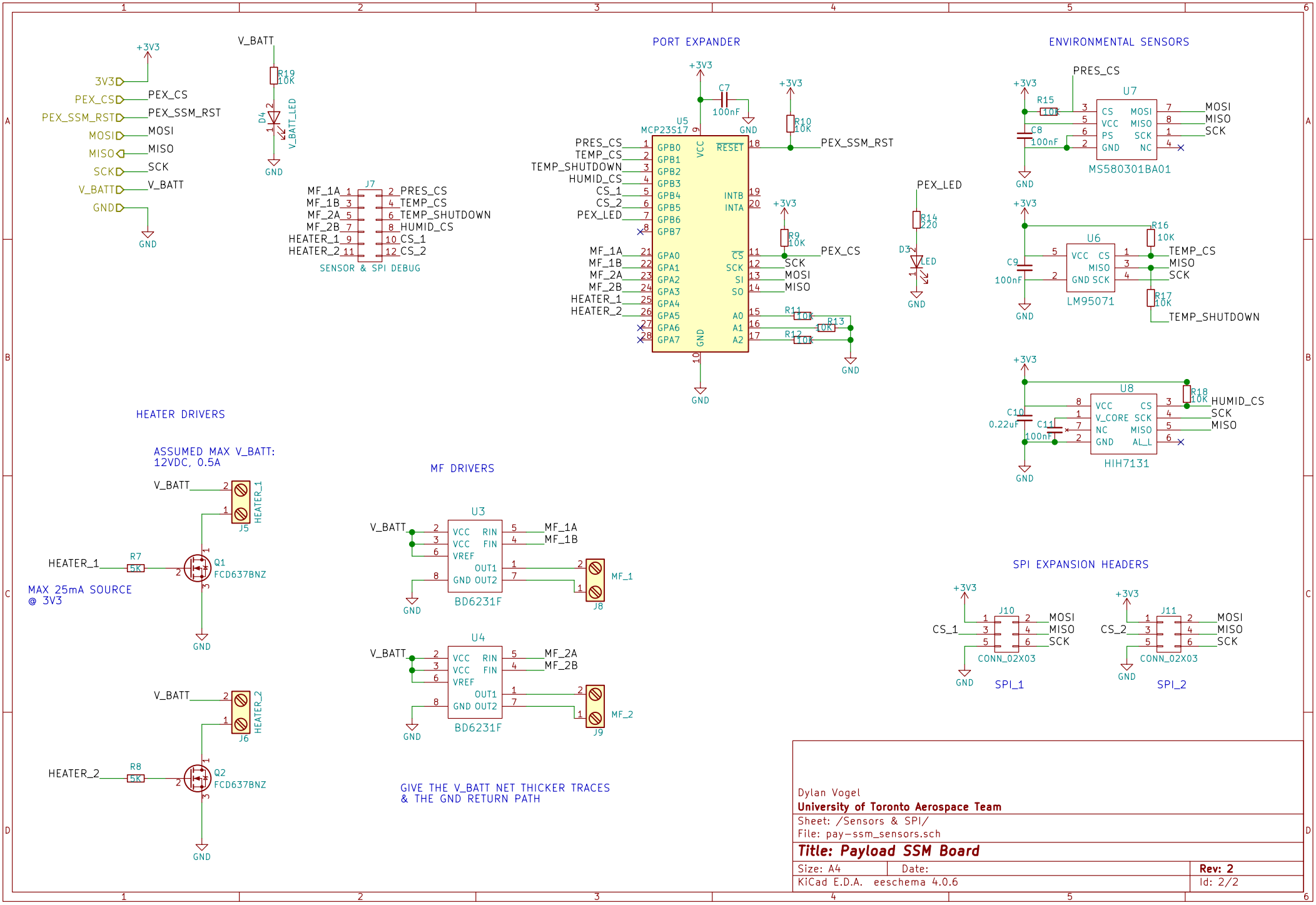
PORT EXPANDER
ENVIRONMENTAL SENSORS
SENSOR & SPI DEBUG
HEATER DRIVERS
ASSUMED MAX V_BATT:
12VDC, 0.5A
MAX 25mA SOURCE
@ 3V3
MF DRIVERS
SPI EXPANSION HEADERS
GIVE THE V_BATT NET THICKER TRACES
& THE GND RETURN PATH
U5
MCP23S17
U7
MS580301BA01
U6
LM95071
U8
HIH7131
U3
BD6231F
U4
BD6231F
J7
J5
J6
J8
J9
J10
J11
CONN_02X03
SPI_1
SPI_2
Q1
FCD637BNZ
Q2
FCD637BNZ
D3
D4
LED
V_BATT_LED
+3V3
V_BATT
GND
PEX_CS
PEX_SSM_RST
MOSI
MISO
SCK
PRES_CS
TEMP_CS
TEMP_SHUTDOWN
HUMID_CS
CS_1
CS_2
PEX_LED
MF_1A
MF_1B
MF_2A
MF_2B
HEATER_1
HEATER_2
MF_1
MF_2
Dylan Vogel
University of Toronto Aerospace Team
Sheet: /Sensors & SPI/
File: pay-ssm_sensors.sch
Title: Payload SSM Board
Size: A4
Date:
Rev: 2
KiCad E.D.A. eeschema 4.0.6
Id: 2/2