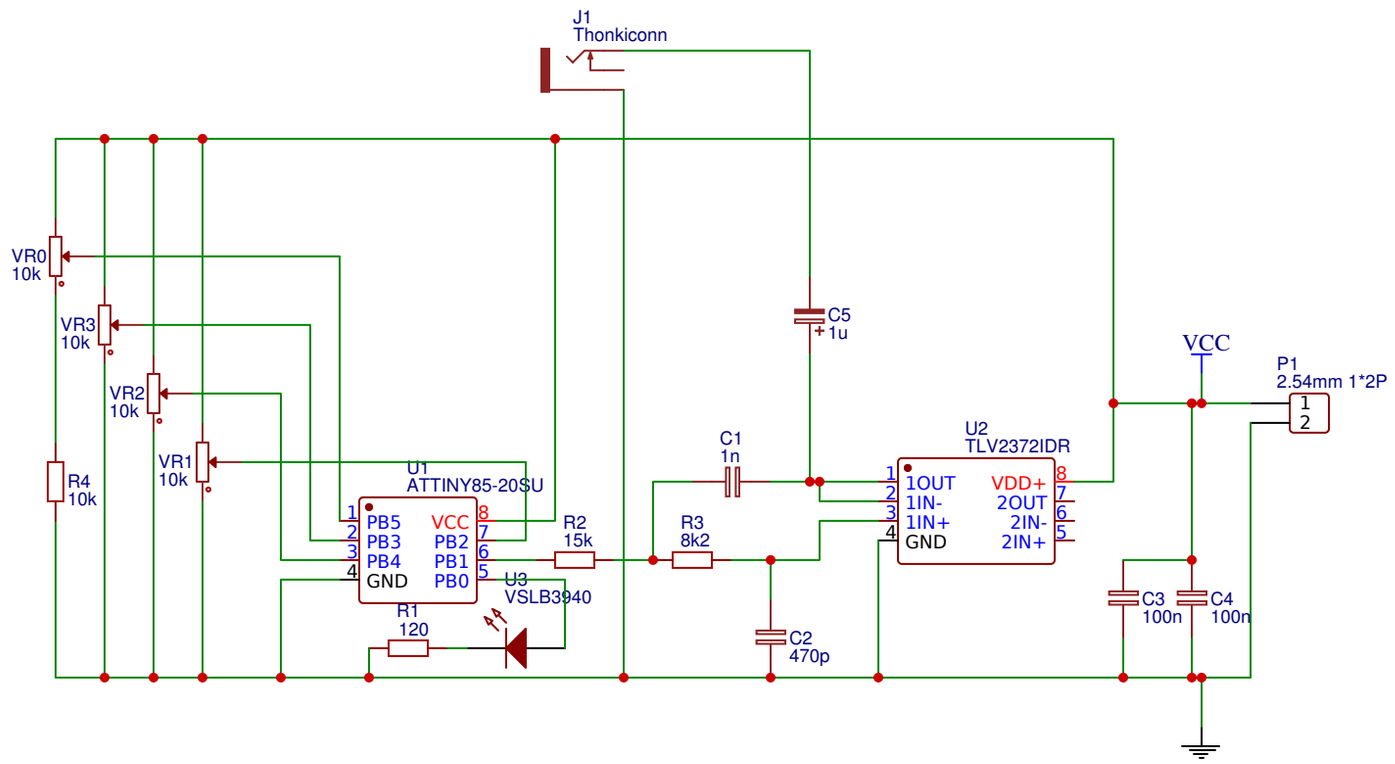

TITLE: Core1	REV: 1.1
Date: 2018-05-05	Sheet: 1/1
EasyEDA V5.4.11	Drawn By: namke