CUT3R: Continuous Updating Transformer for 3D Reconstruction

> #CV #3D Reconstruction #Stream #Hybrid Architecture #DeepMind

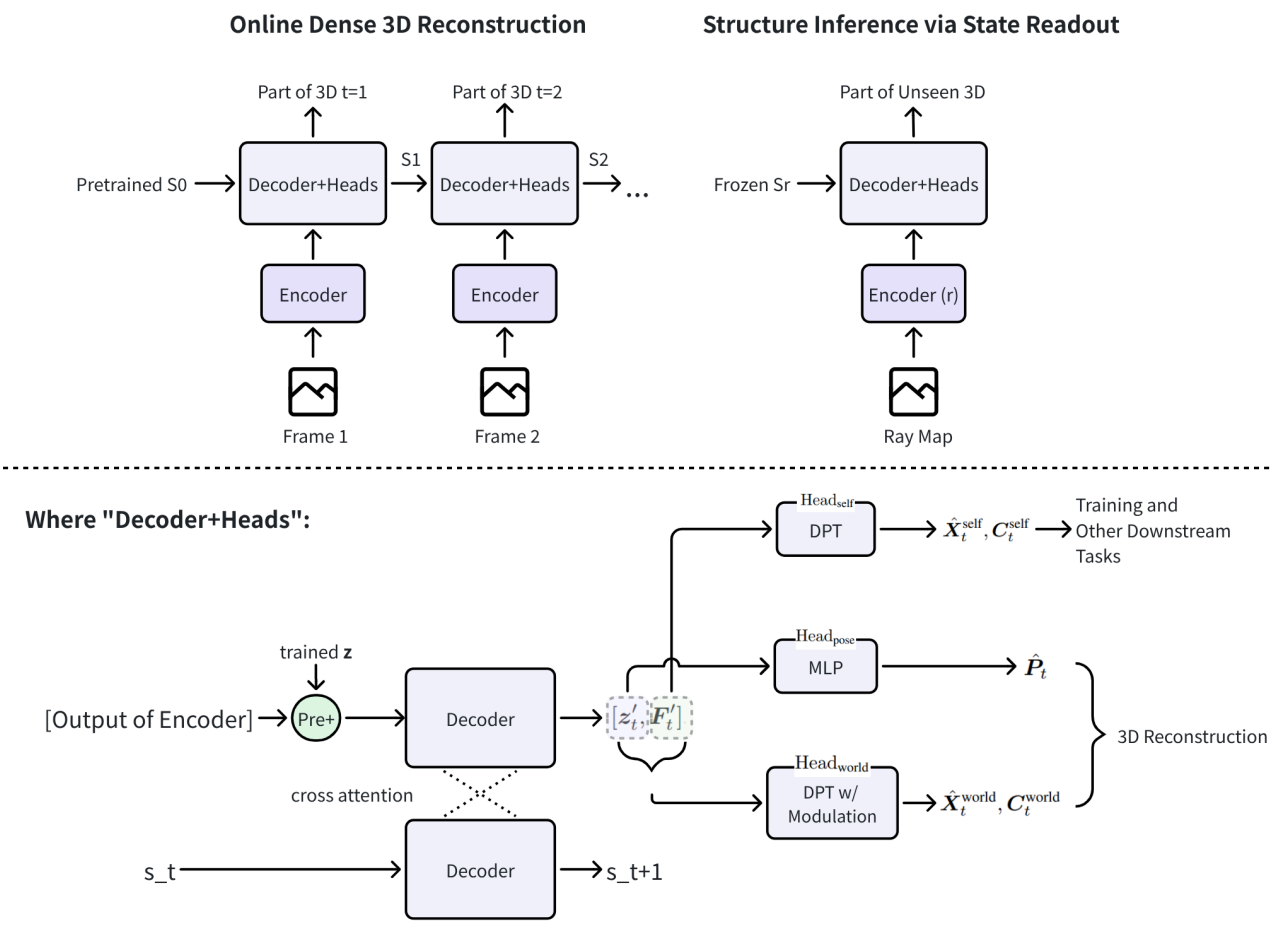

$$L_{total} = \lambda_1 L_{conf}(\hat{X}^{self}) + \lambda_2 L_{conf}(\hat{X}^{world}) + \lambda_3 L_{pose} + \mathbb{I}_{raymap} \cdot \lambda_4 L_{rgb}$$

- Review
- Work Cited
  - Paper
  - Chat History
  - NotebookLM