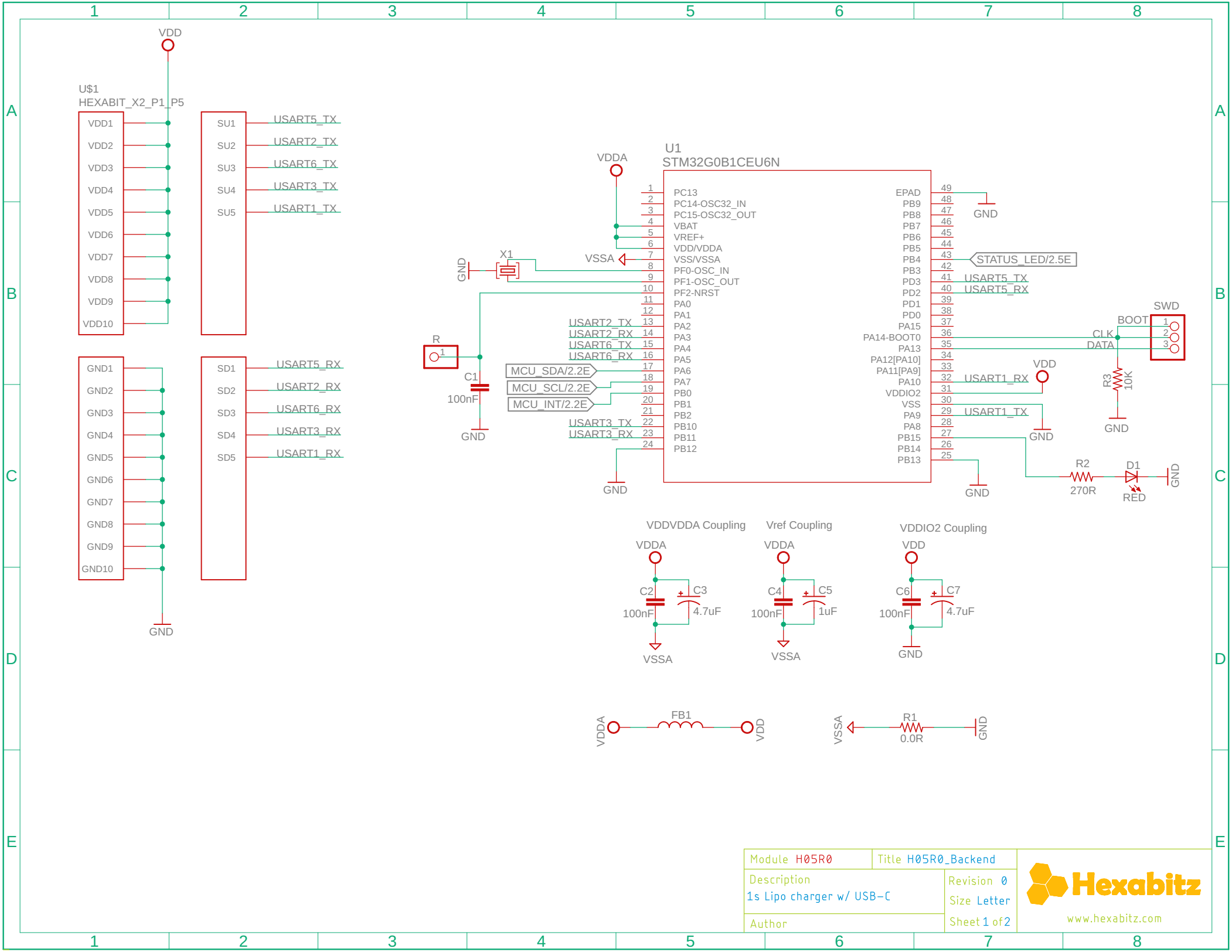

Module H05R0	Title H05R0_Backend
Description 1s Lipo charger w/ USB-C	Revision 0 Size Letter
Author	Sheet 1 of 2

Hexabitz
www.hexabitz.com

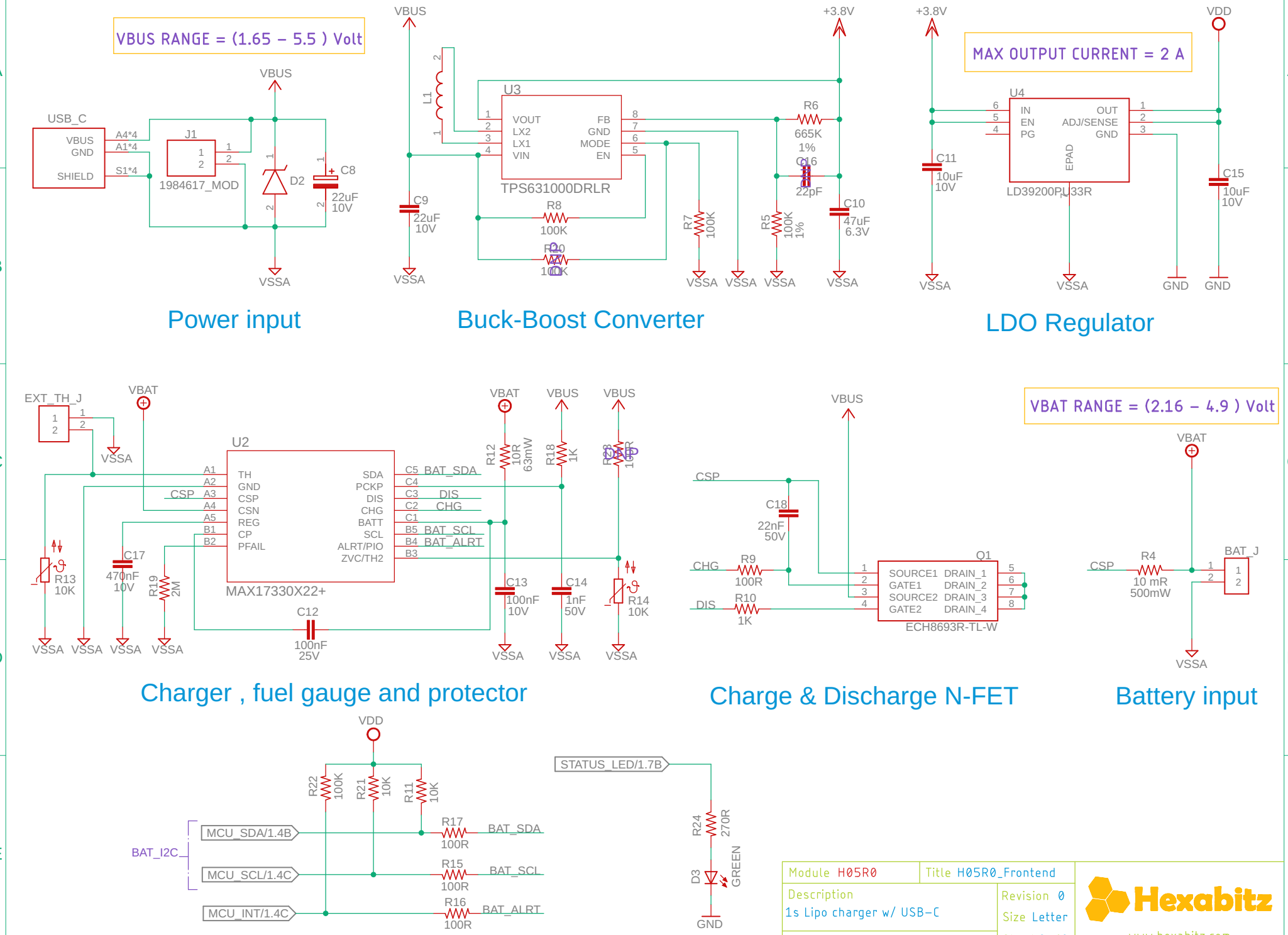
VBUS RANGE = (1.65 – 5.5) Volt
USB_C
VBUS
GND
SHIELD
A4*4
A1*4
S1*4
J1
1984617_MOD
D2
C8
22uF
10V
VSSA
Power input
U3
TPS631000DRLR
VOUT
LX2
LX1
VIN
FB
GND
MODE
EN
L1
C9
22uF
10V
R8
100K
R7
100K
R5
100K
1%
R6
665K
1%
C16
22pF
C10
47uF
6.3V
+3.8V
Buck-Boost Converter
MAX OUTPUT CURRENT = 2 A
U4
LD39200PU33R
IN
EN
PG
OUT
ADJ/SENSE
GND
EPAD
C11
10uF
10V
C15
10uF
10V
VDD
GND
LDO Regulator
EXT_TH_J
VBAT
U2
MAX17330X22+
TH
GND
CSP
CSN
REG
CP
PFAIL
SDA
PCKP
DIS
CHG
BATT
SCL
ALRT/PIO
ZVC/TH2
BAT_SDA
BAT_SCL
BAT_ALRT
R13
10K
C17
470nF
10V
R19
2M
C12
100nF
25V
R12
10R
63mW
R18
1K
C13
100nF
10V
C14
1nF
50V
R14
10K
Charger , fuel gauge and protector
VBAT RANGE = (2.16 – 4.9) Volt
C18
22nF
50V
R9
100R
R10
1K
Q1
ECH8693R-TL-W
SOURCE1
GATE1
SOURCE2
GATE2
DRAIN_1
DRAIN_2
DRAIN_3
DRAIN_4
Charge & Discharge N-FET
R4
10 mR
500mW
BAT_J
Battery input
R22
100K
R21
10K
R11
10K
BAT_I2C
MCU_SDA/1.4B
MCU_SCL/1.4C
MCU_INT/1.4C
R17
100R
R15
100R
R16
100R
STATUS_LED/1.7B
R24
270R
D3
GREEN
Module H05R0
Title H05R0_Frontend
Description
1s Lipo charger w/ USB-C
Revision 0
Size Letter
Sheet 2 of 2
Author
Hexabitz
www.hexabitz.com