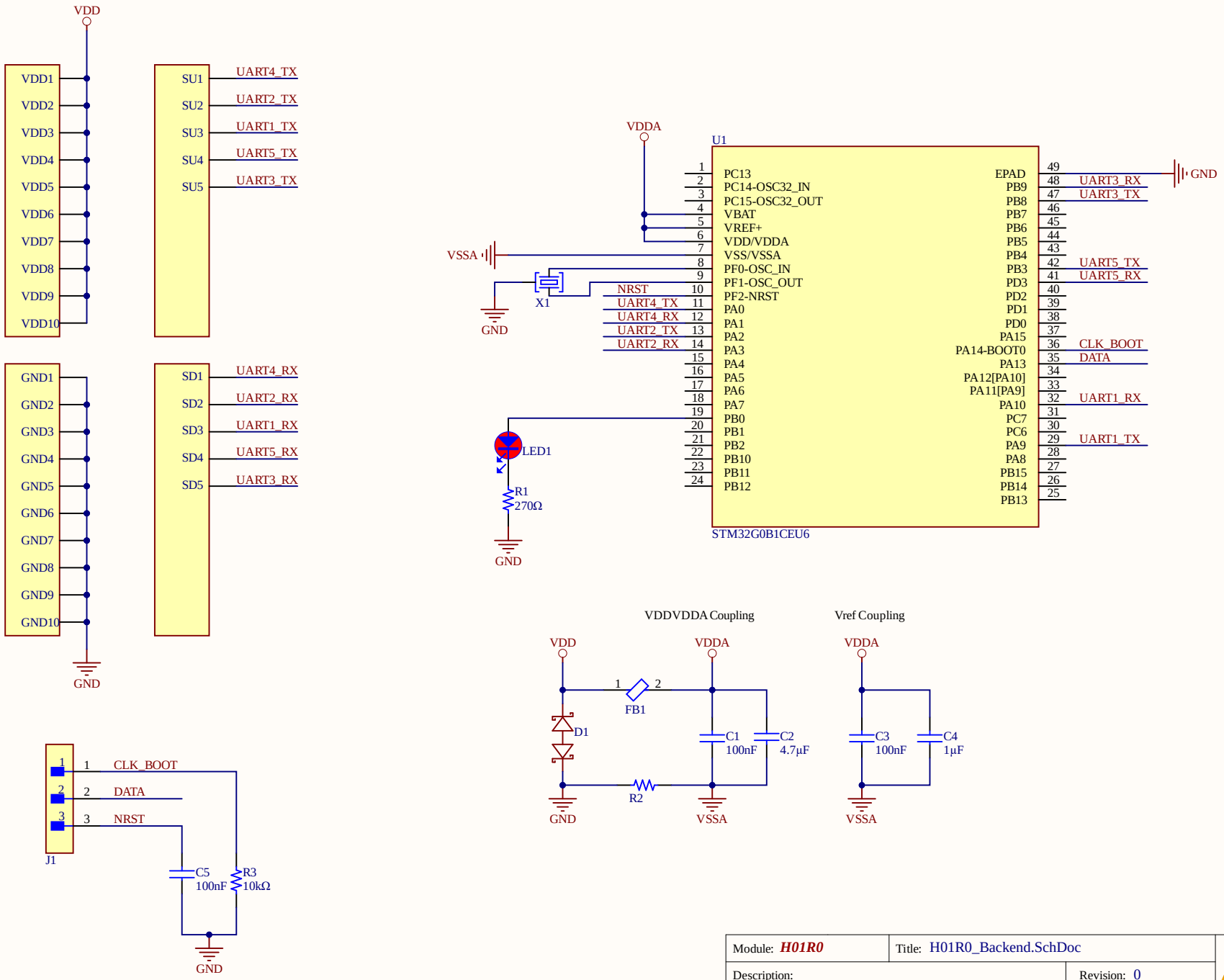

Module: ***H01R0***	Title: H01R0_Backend.SchDoc	
Description: RGB LED		Revision: 0
		Size: Letter
Date: 11/5/2025	Time: 11:49:33 AM	Sheet 1 of 3

HEXABITZ
www.hexabitz.com

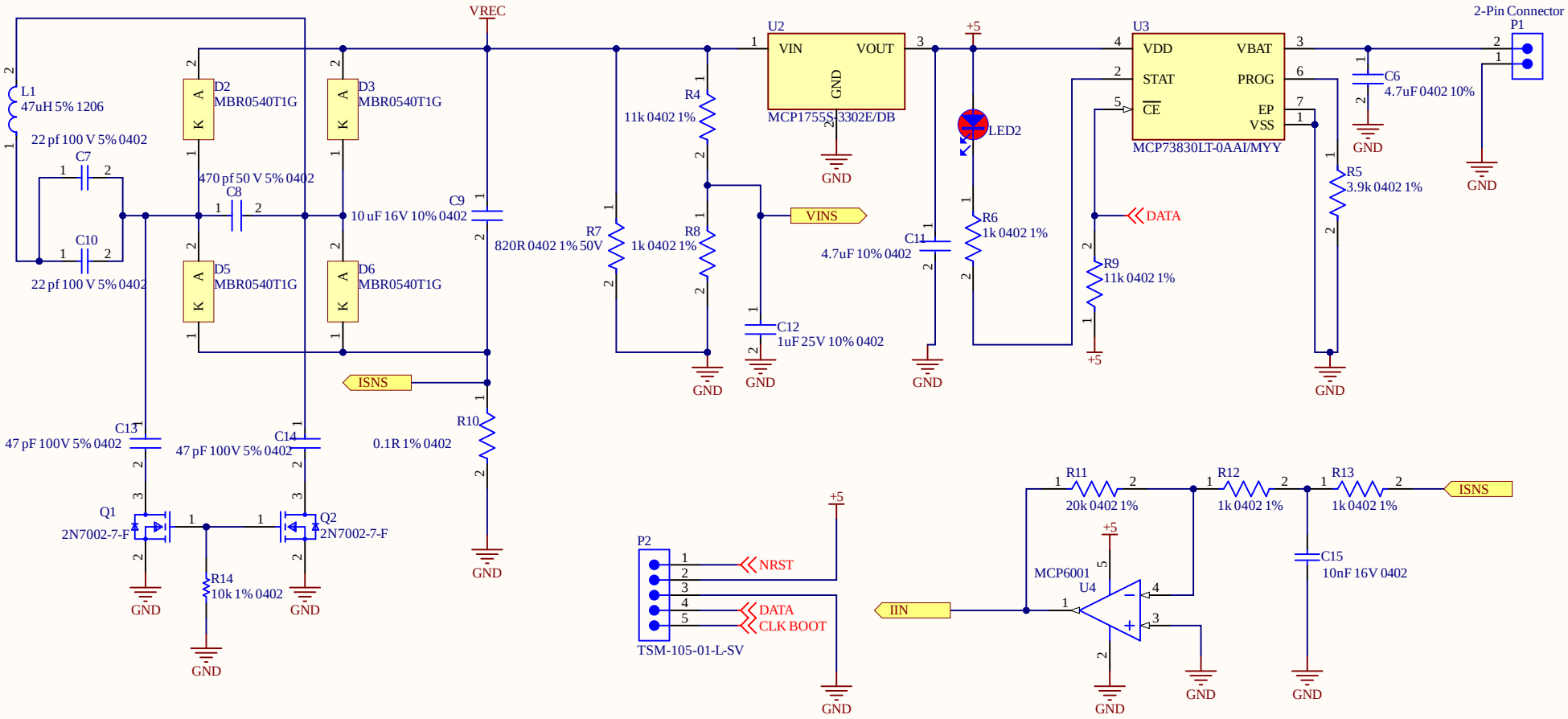

Module: ***H01R0***	Title: H01R0_Frontend 1.SchDoc	
Description: RGB LED		Revision: 0
		Size: Letter
Date: 11/5/2025	Time: 11:49:34 AM	Sheet 2 of 3

HEXABITZ
www.hexabitz.com

Module: *H01R0*	Title: H01R0_Frontend 2.SchDoc	
Description: RGB LED		Revision: 0 Size: Letter
Date: 11/5/2025	Time: 11:49:34 AM	Sheet 3 of 3

HEXABITZ
www.hexabitz.com

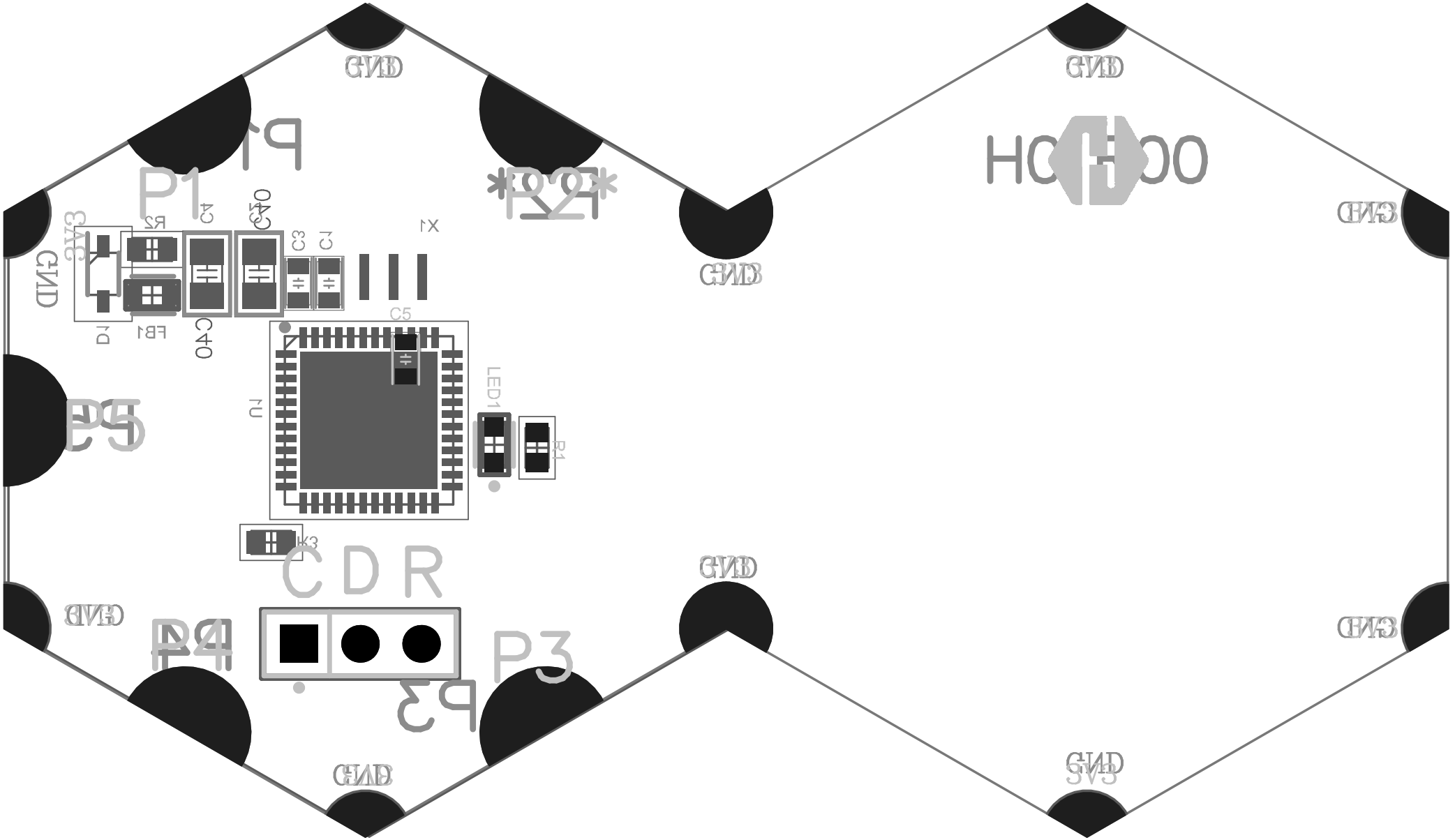
P1
P2
P3
P4
P5
C5
LED1
R1
C3
C4
C40
X1
C D R

Board Stack Report