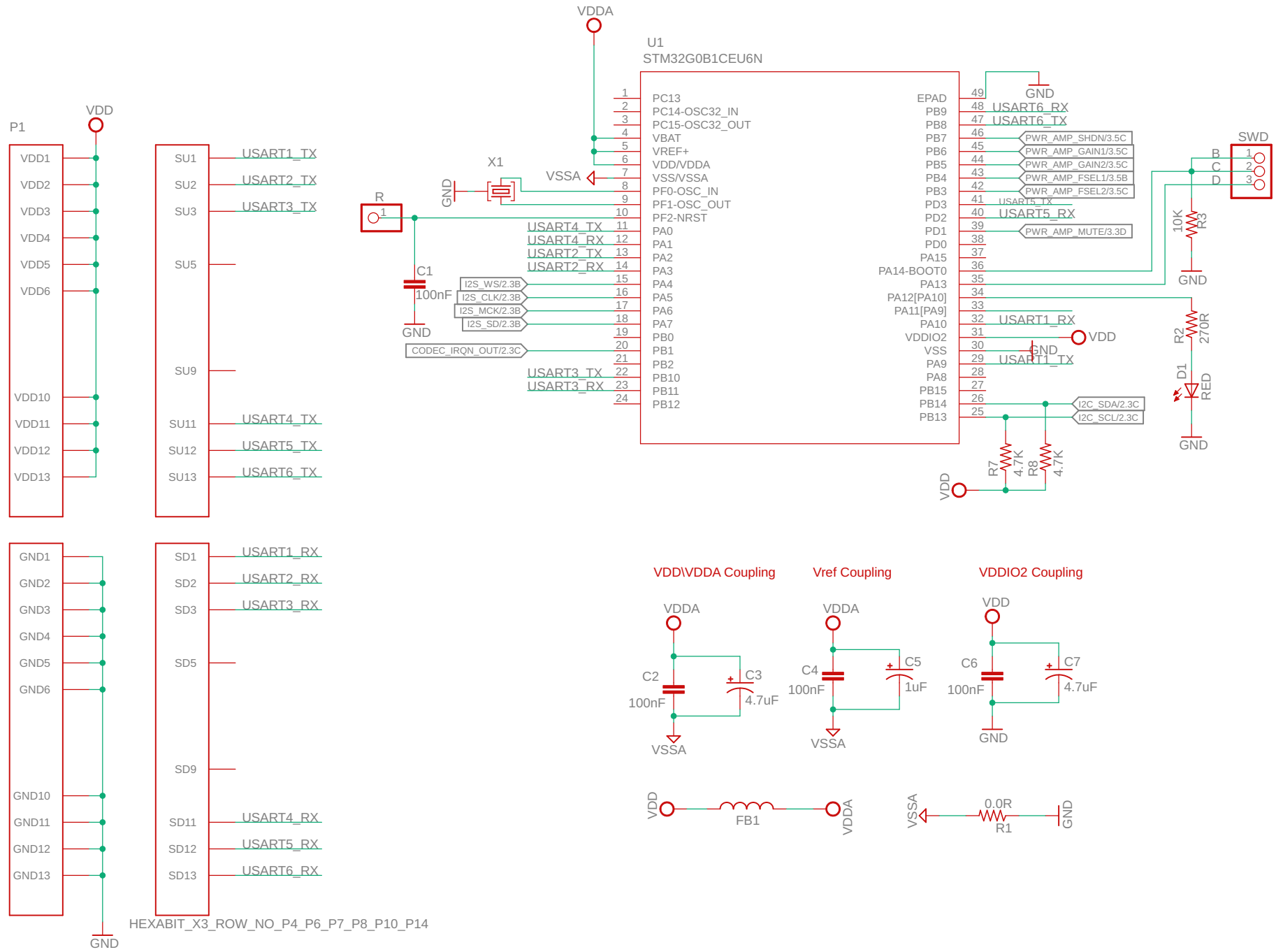

Module H07R8	Title H07R8_Backened
Description 10W Stereo Audio Amplifier	Revision 0
	Size Letter
Author	Sheet 1 of 3

Hexabitz
www.hexabitz.com

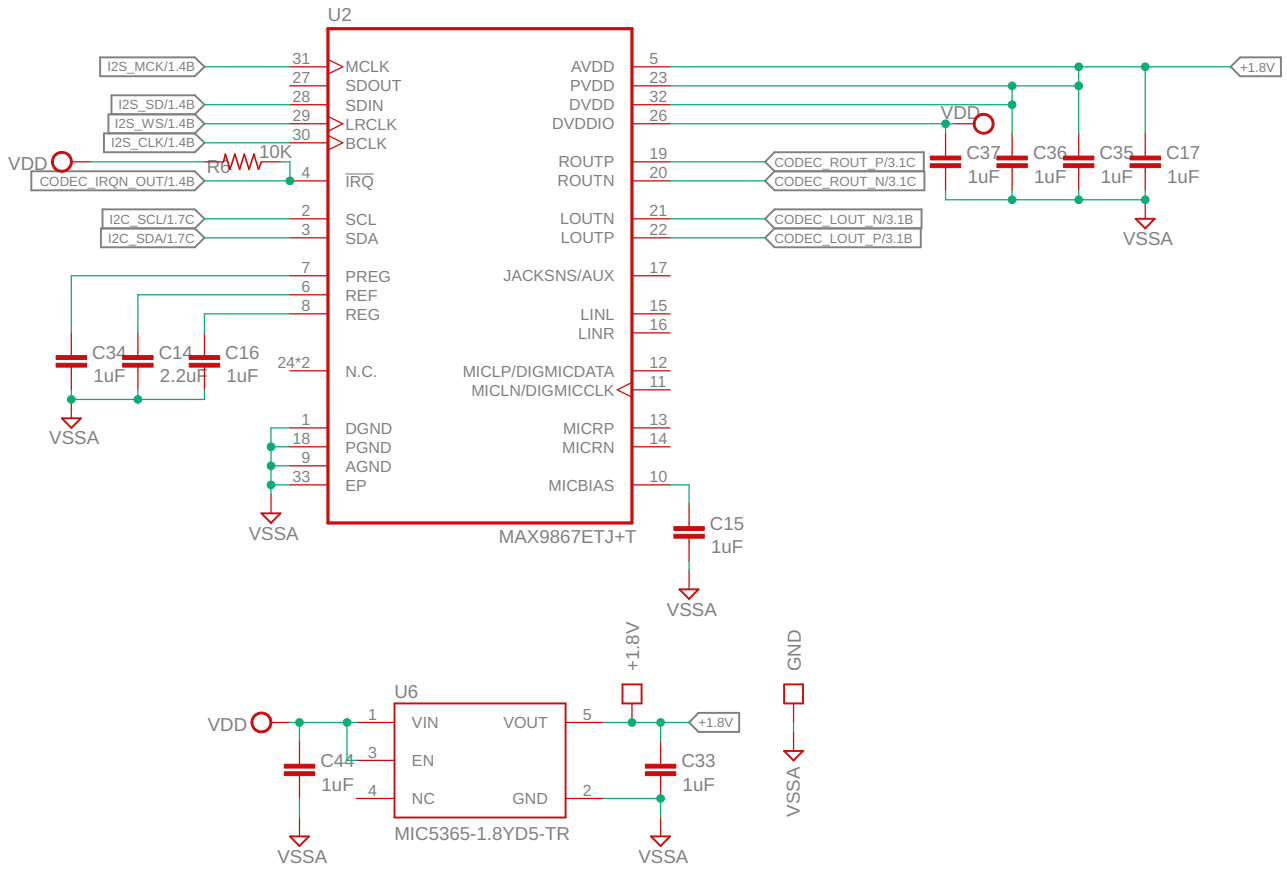

Module H07R8	Title H07R8_Frontened	
Description 10W Stereo Audio Amplifier	Revision 0 Size Letter Sheet 2 of 3	Hexabitz www.hexabitz.com
Author		

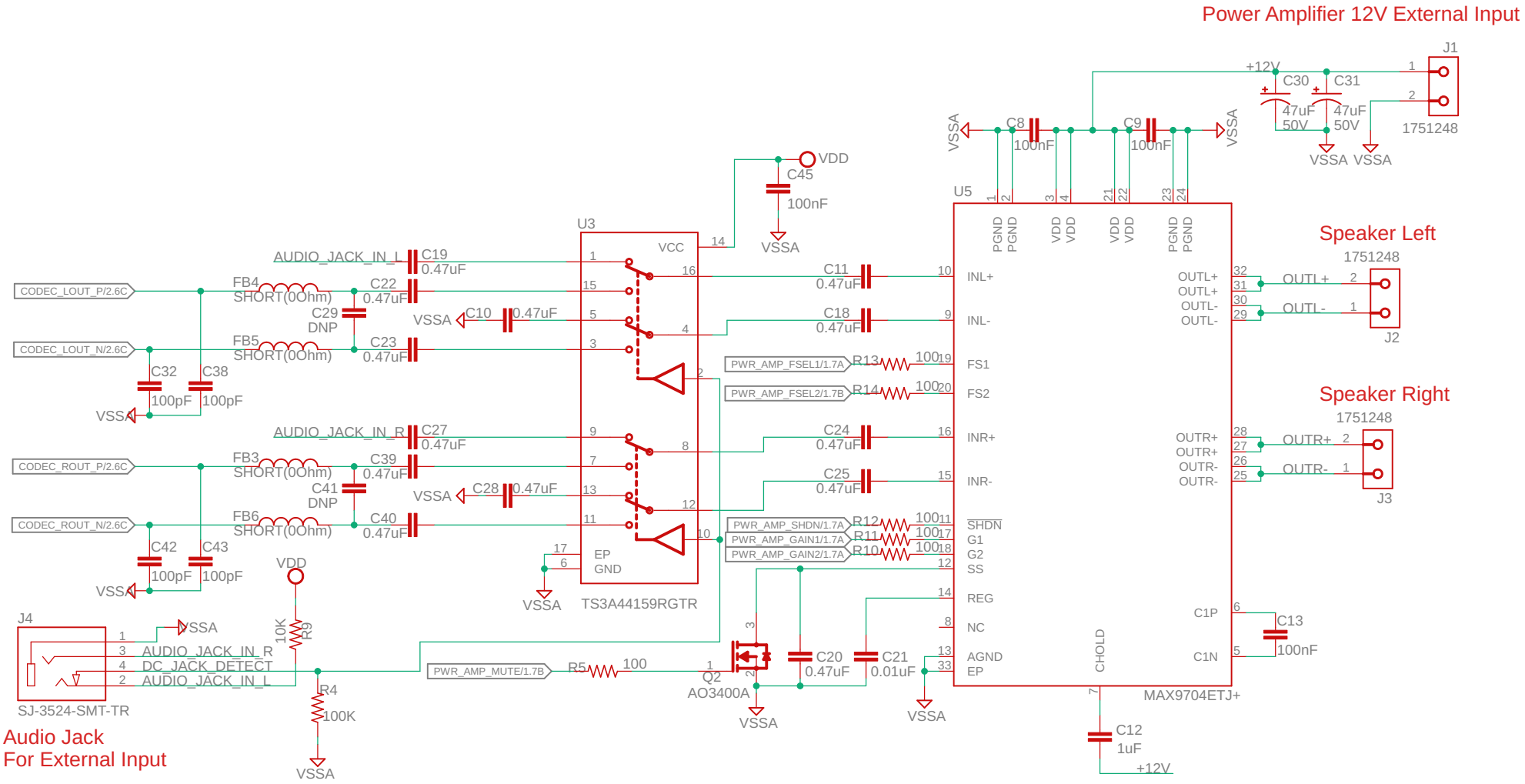
Power Amplifier 12V External Input
J1
1751248
+12V
C30
C31
47uF
50V
VSSA
C8
100nF
C9
U5
MAX9704ETJ+
Speaker Left
1751248
J2
OUTL+
OUTL-
Speaker Right
J3
OUTR+
OUTR-
C13
100nF
C12
1uF
VDD
C45
U3
TS3A44159RGTR
AUDIO_JACK_IN_L
AUDIO_JACK_IN_R
C19
C22
C23
C27
C39
C40
C11
C18
C24
C25
C20
C21
R13
R14
R12
R11
R10
R5
Q2
AO3400A
PWR_AMP_FSEL1/1.7A
PWR_AMP_FSEL2/1.7B
PWR_AMP_SHDN/1.7A
PWR_AMP_GAIN1/1.7A
PWR_AMP_GAIN2/1.7A
PWR_AMP_MUTE/1.7B
CODEC_LOUT_P/2.6C
CODEC_LOUT_N/2.6C
CODEC_ROUT_P/2.6C
CODEC_ROUT_N/2.6C
FB4
FB5
FB3
FB6
SHORT(0Ohm)
C29
C41
DNP
C10
C28
C32
C38
C42
C43
100pF
J4
SJ-3524-SMT-TR
DC_JACK_DETECT
R9
10K
R4
100K
Audio Jack
For External Input
Module H07R8
Title H07R8_Frontened
Description
10W Stereo Audio Amplifier
Revision 0
Size Letter
Sheet 3 of 3
Author
Hexabitz
www.hexabitz.com