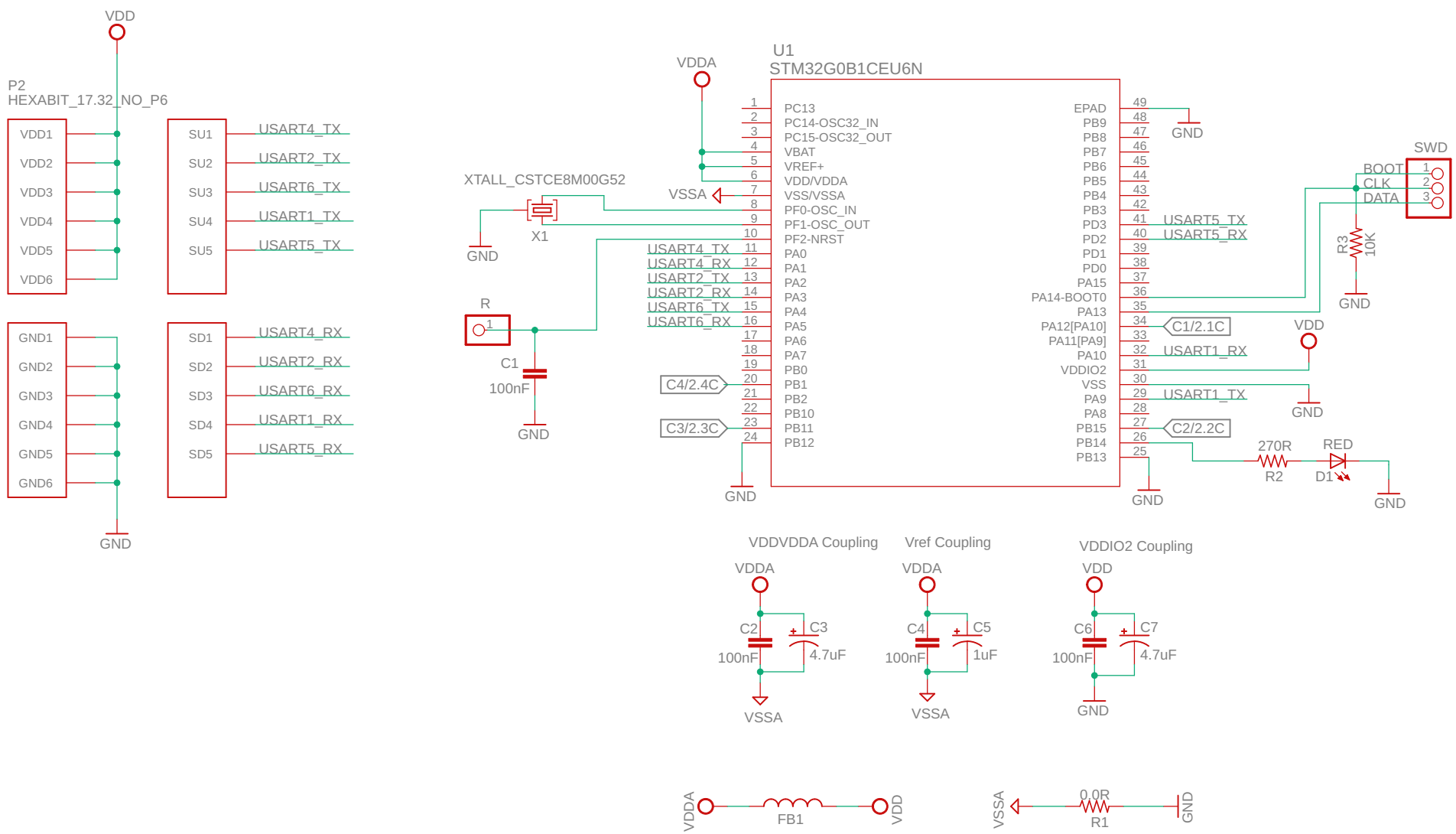

Module H14R90	Title H14R90_Backend
Description 4 x 5V PWM O/P + External Supply	Revision 0
	Size Letter
Author Ibrahim Zaeiter	Sheet 1 of 2

Hexabitz

www.hexabitz.com

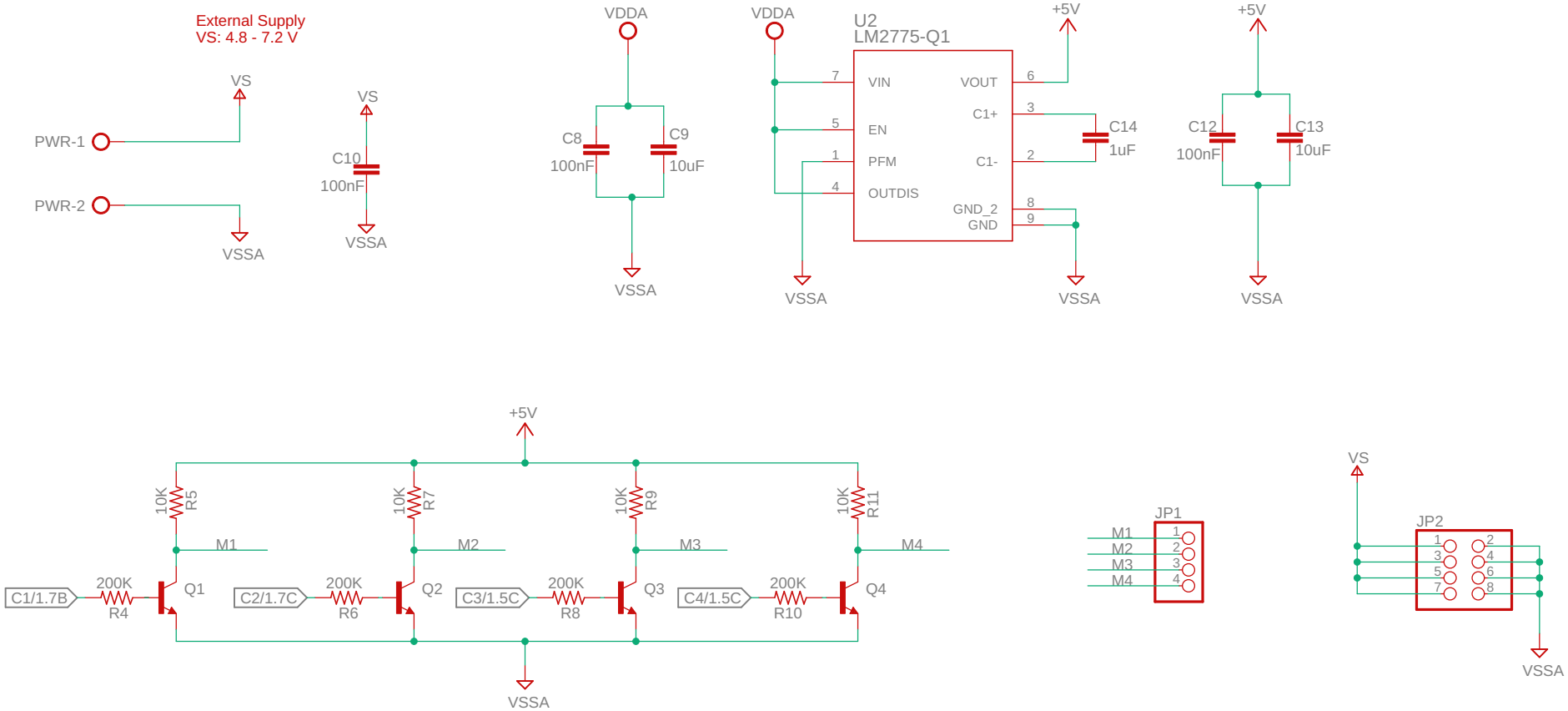

Module H14R90	Title H14R90_Frontend	
Description 4 x 5V PWM O/P + External Supply	Revision 0	Hexabitz
	Size Letter	www.hexabitz.com
Author Ibrahim Zaeiter	Sheet 2 of 2	