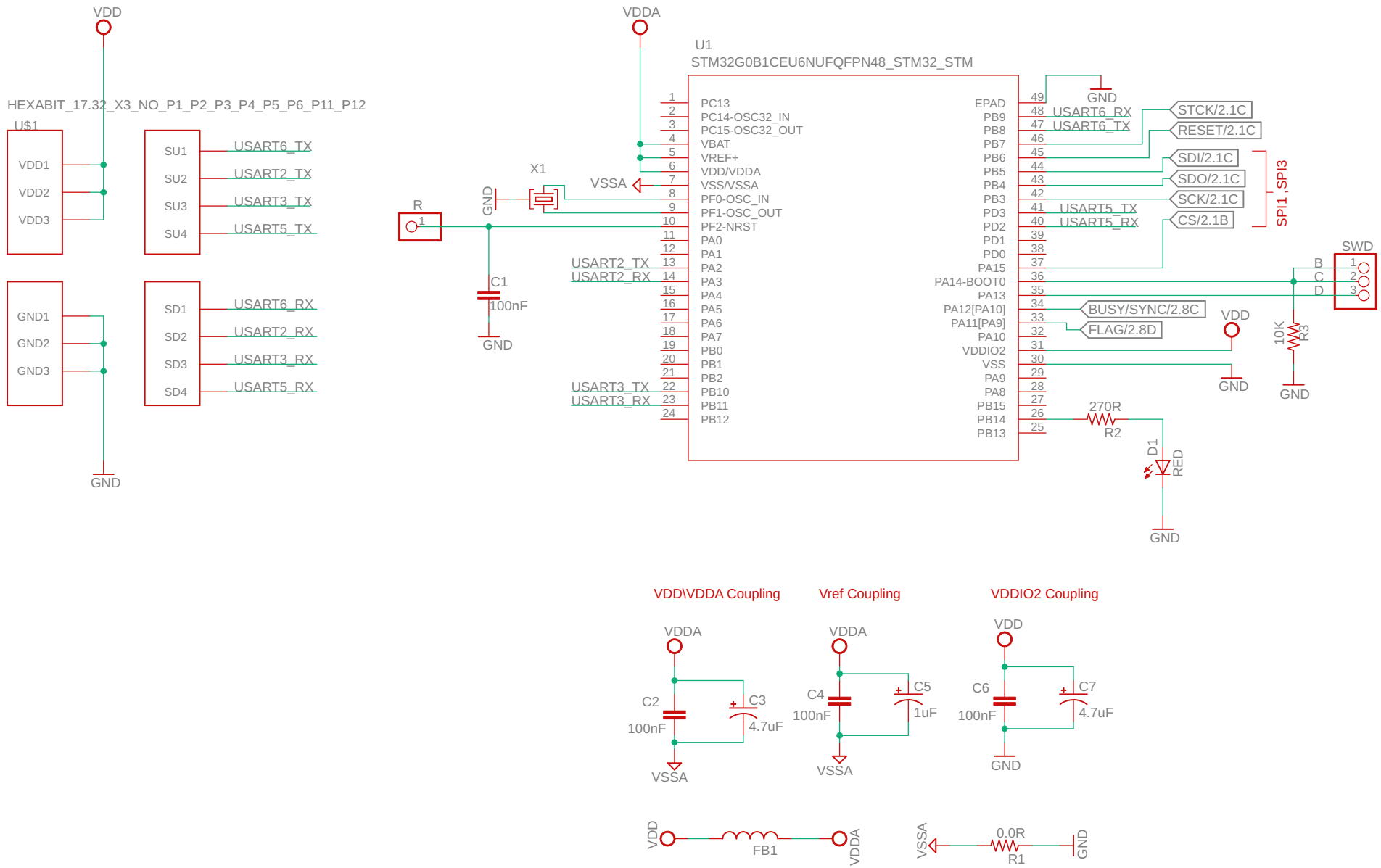

Module H17R10	Title H17R10_Backened
Description: Stepper motor driver 10A(RMS) , 10.5 to 85V	Revision 0
	Size Letter
Author Ibrahim Zaeiter	Sheet 1 of 2

Hexabitz
www.hexabitz.com

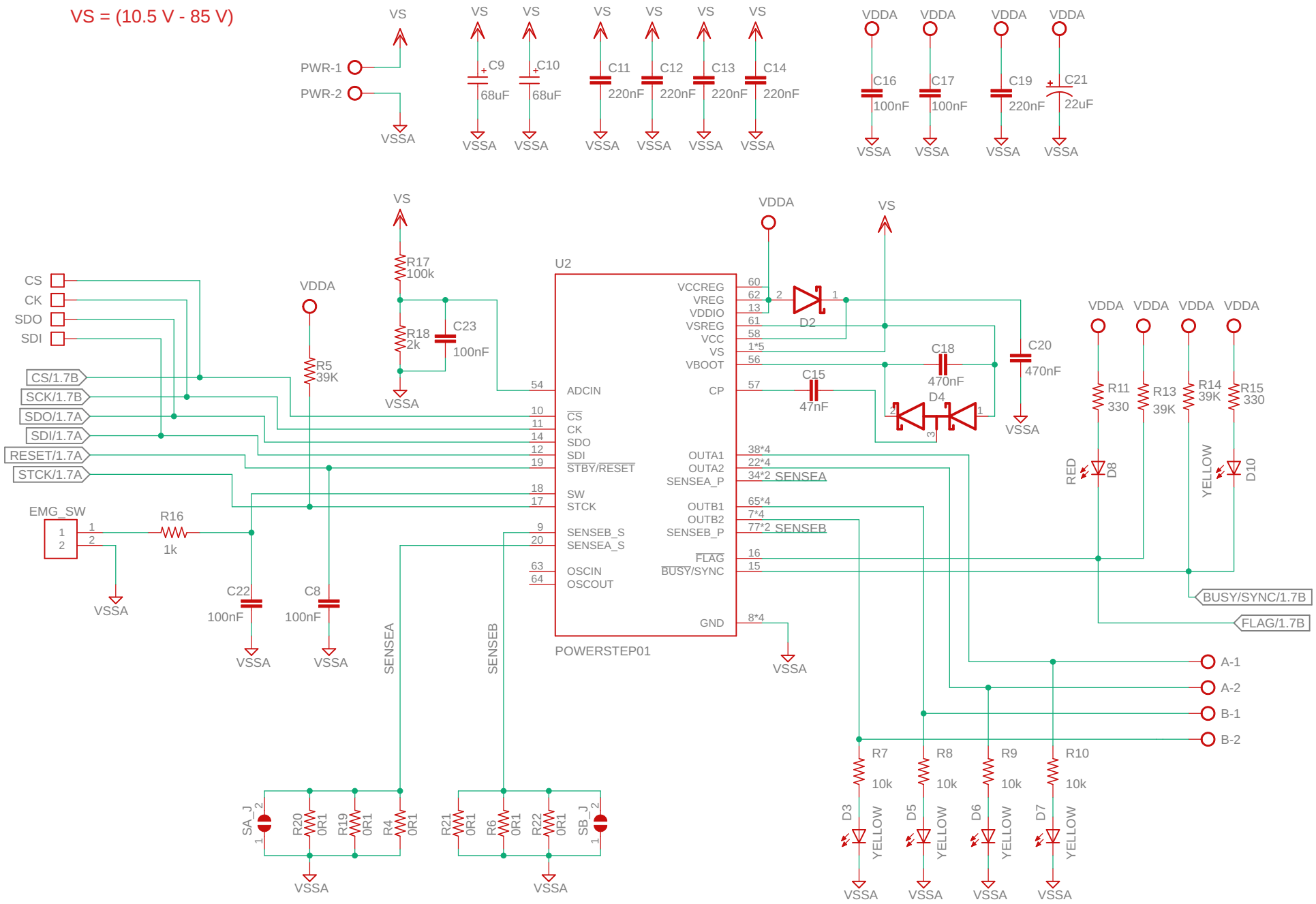

Module H17R10	Title H17R10_Frontened
Description: Stepper motor driver 10A(RMS) , 10.5 to 85V	Revision 0
	Size Letter
Author Ibrahim Zaeiter	Sheet 2 of 2

Hexabitz
www.hexabitz.com