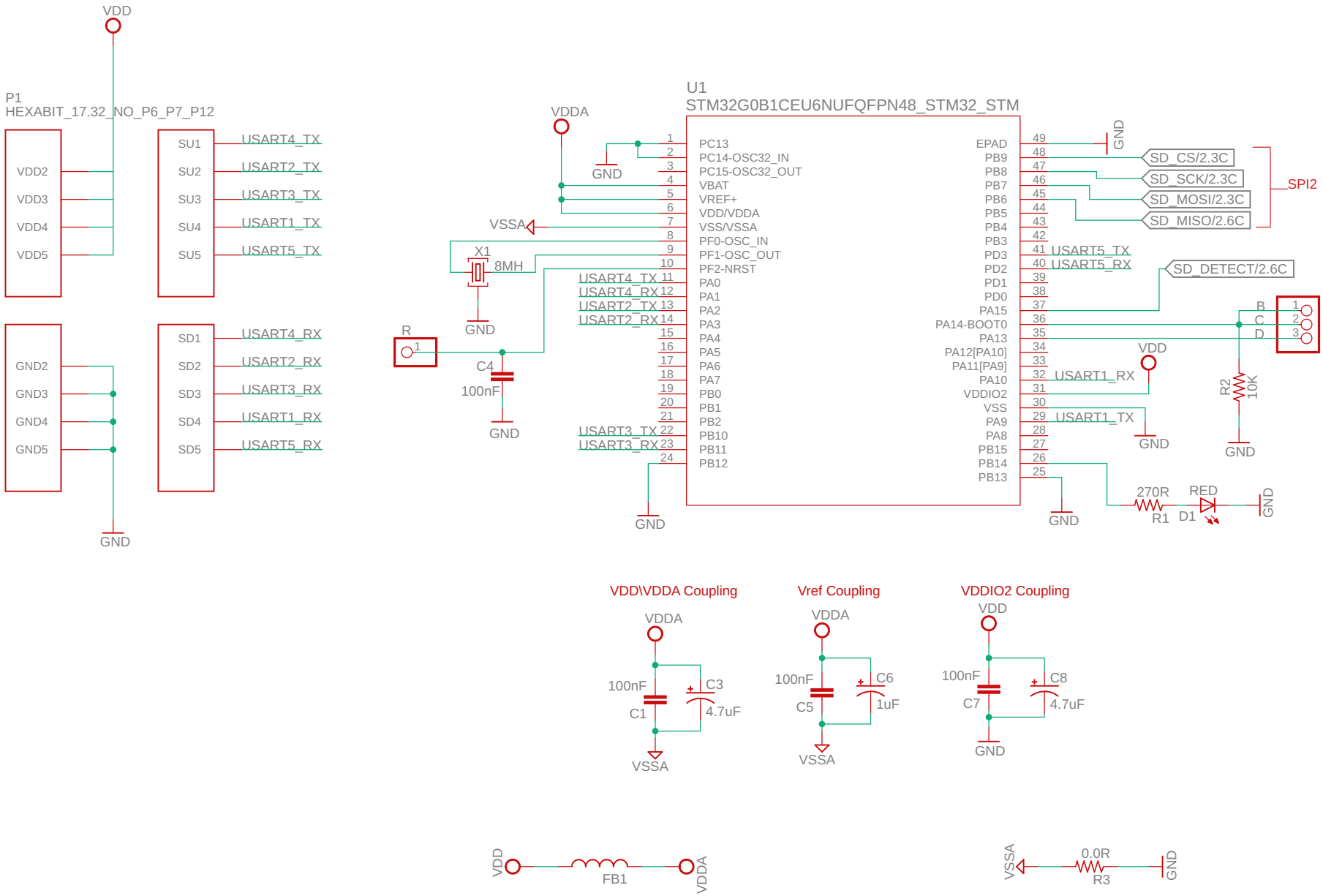

Module H1BR61	Title H1B6R1_Backend
Description: Micro SD Card Reader	Revision 1
	Size Letter
Author Esraa Alkadour	Sheet 1 of 2

Hexabitz
www.hexabitz.com

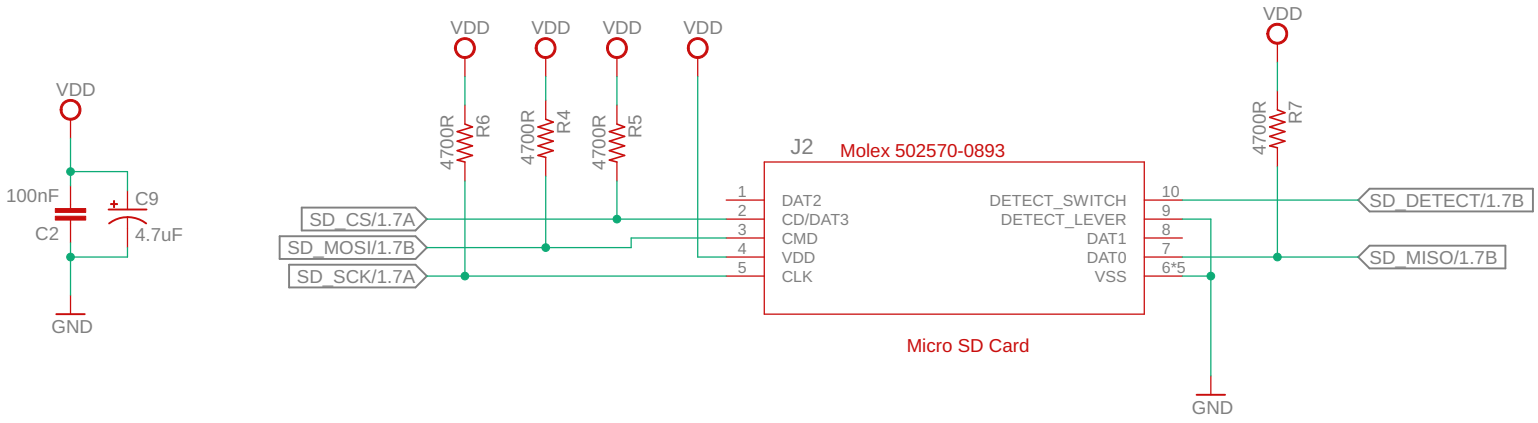

Module H1BR61	Title H1BR61_Backend	
Description Micro SD Card Reader	Revision 1 Size Letter	Hexabitz www.hexabitz.com
Author Esraa Alkadour	Sheet 2 of 2	