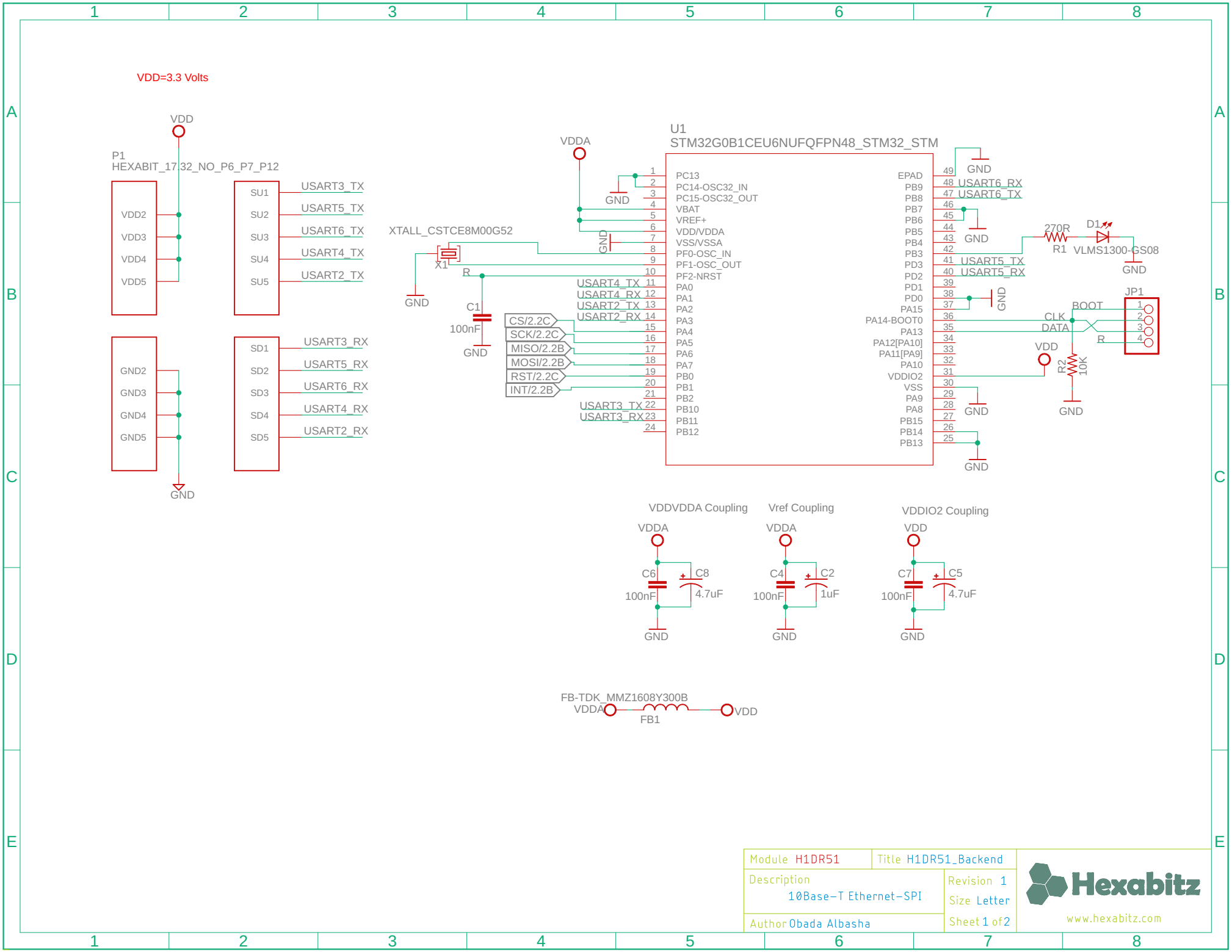
VDD=3.3 Volts
VDD
P1
HEXABIT_17.32_NO_P6_P7_P12
VDD2
VDD3
VDD4
VDD5
GND2
GND3
GND4
GND5
GND
SU1
SU2
SU3
SU4
SU5
USART3_TX
USART5_TX
USART6_TX
USART4_TX
USART2_TX
SD1
SD2
SD3
SD4
SD5
USART3_RX
USART5_RX
USART6_RX
USART4_RX
USART2_RX
XTALL_CSTCE8M00G52
X1
R
C1
100nF
VDDA
U1
STM32G0B1CEU6NUFQFPN48_STM32_STM
PC13
PC14-OSC32_IN
PC15-OSC32_OUT
VBAT
VREF+
VDD/VDDA
VSS/VSSA
PF0-OSC_IN
PF1-OSC_OUT
PF2-NRST
PA0
PA1
PA2
PA3
PA4
PA5
PA6
PA7
PB0
PB1
PB2
PB10
PB11
PB12
CS/2.2C
SCK/2.2C
MISO/2.2B
MOSI/2.2B
RST/2.2C
INT/2.2B
EPAD
PB9
PB8
PB7
PB6
PB5
PB4
PB3
PD3
PD2
PD1
PD0
PA15
PA14-BOOT0
PA13
PA12[PA10]
PA11[PA9]
PA10
VDDIO2
VSS
PA9
PA8
PB15
PB14
PB13
USART6_RX
USART6_TX
USART5_TX
USART5_RX
270R
R1
D1
VLMS1300-GS08
JP1
BOOT
CLK
DATA
R2
10K
VDDVDDA Coupling
C6
100nF
C8
4.7uF
Vref Coupling
C4
100nF
C2
1uF
VDDIO2 Coupling
C7
100nF
C5
4.7uF
FB-TDK_MMZ1608Y300B
FB1
Module H1DR51
Title H1DR51_Backend
Description
10Base-T Ethernet-SPI
Revision 1
Size Letter
Sheet 1 of 2
Author Obada Albasha
Hexabitz
www.hexabitz.com

VDD=3.3 Volts

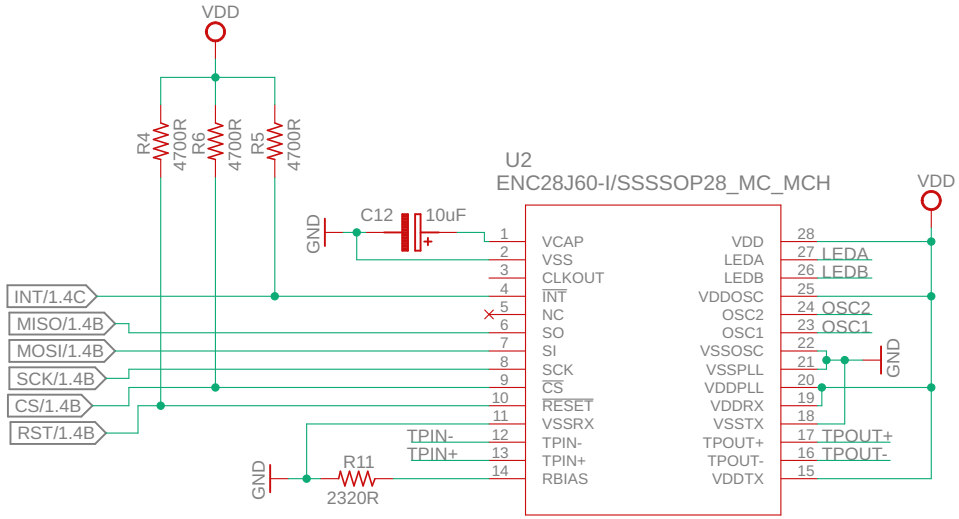

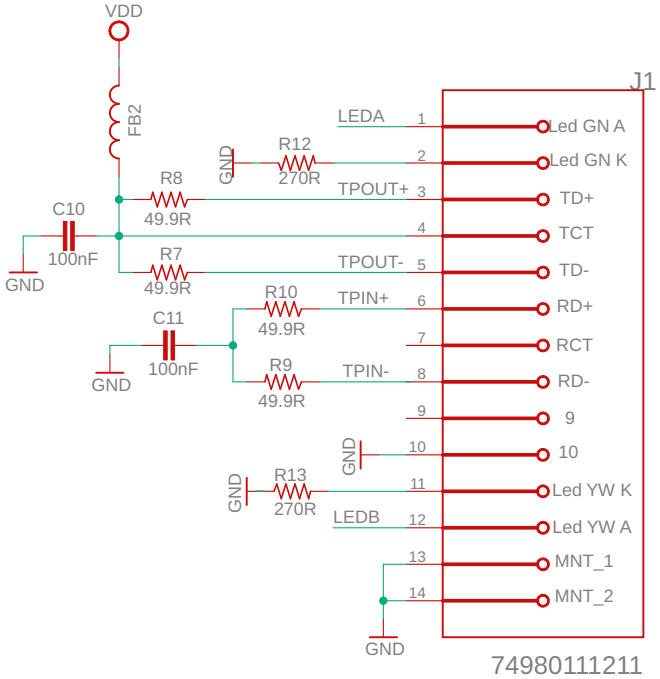

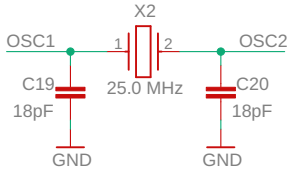

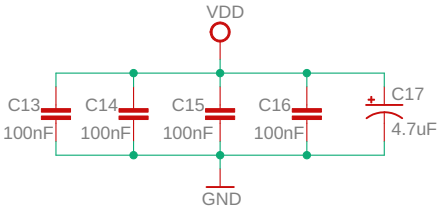

Module H1DR51	Title H1DR51_Frontend	
Description 10Base-T Ethernet-SPI	Revision 1	Hexabitz
	Size Letter	www.hexabitz.com
Author Obada Albasha	Sheet 2 of 2	