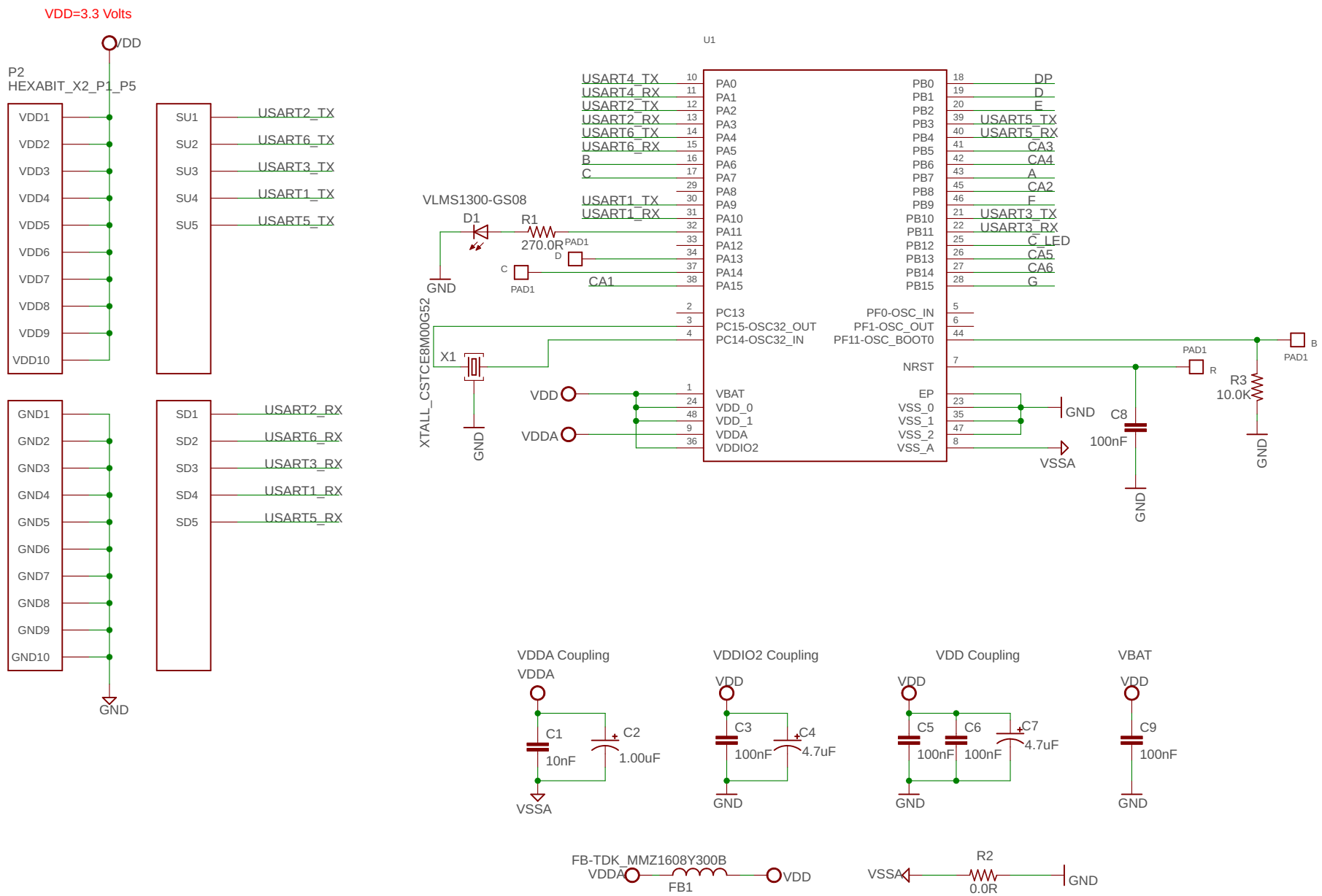

Module H3BR6	Title H3BR6_Backend	Hexabitz
Description 6-Digit 7-Segment Display	Revision 0	
	Size Letter	
Author	Sheet 1 of 2	www.hexabitz.com

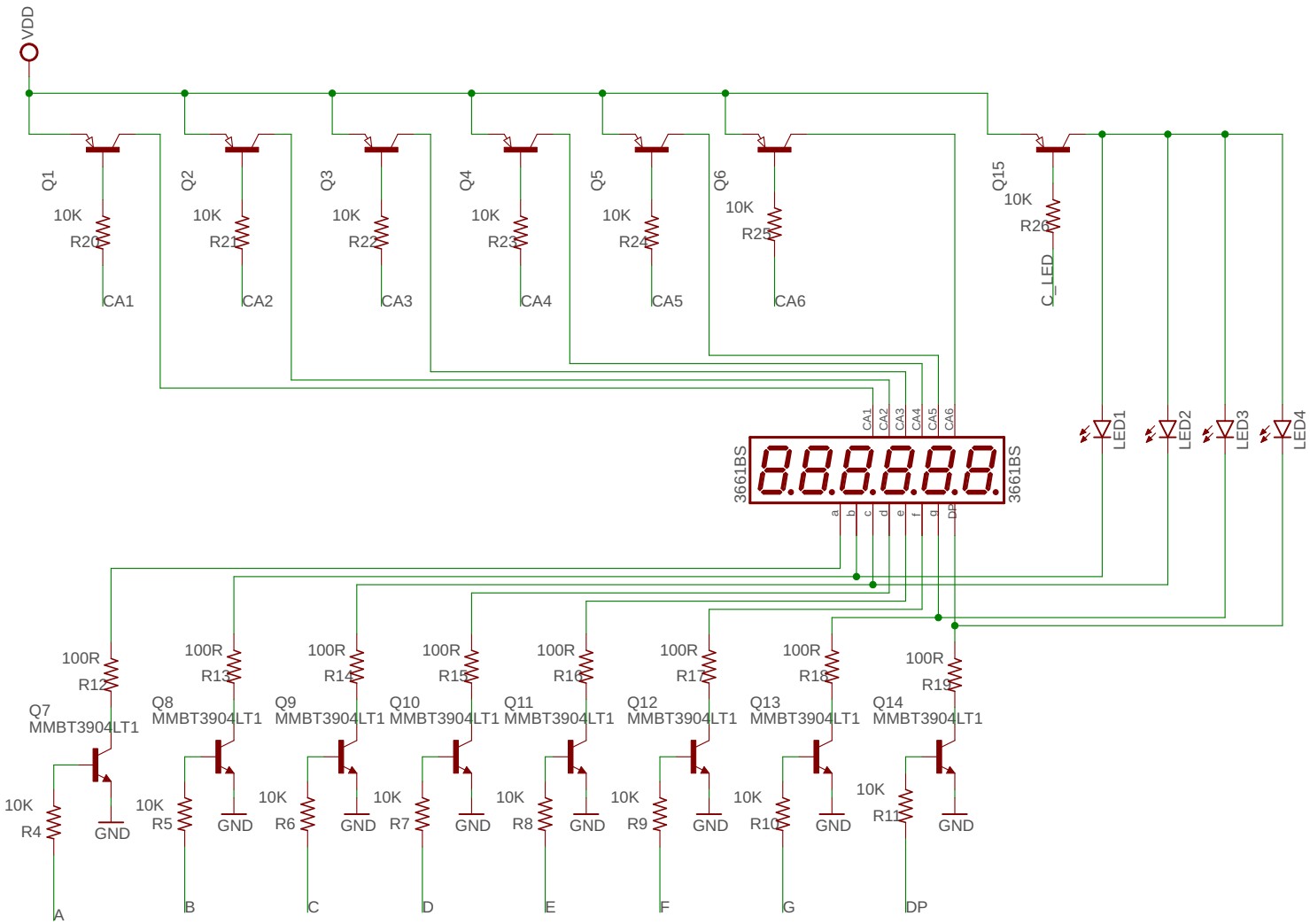

Module H3BR6	Title H3BR6_Frontend	Hexabitz
Description 6-Digit 7-Segment Display	Revision 0	
	Size Letter	
Author	Sheet 2 of 2	www.hexabitz.com