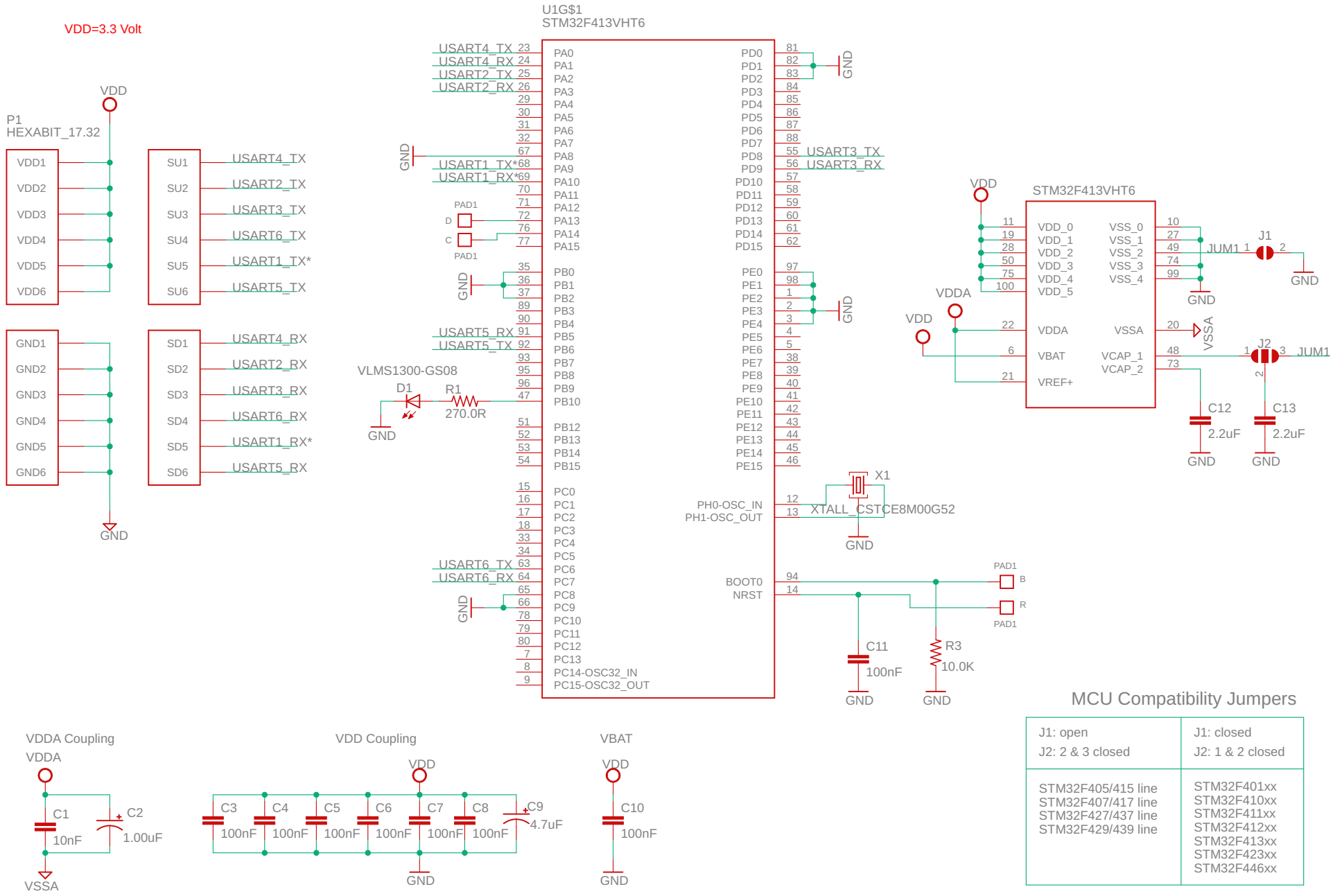

MCU Compatibility Jumpers

J1: open J2: 2 & 3 closed	J1: closed J2: 1 & 2 closed
STM32F405/415 line STM32F407/417 line STM32F427/437 line STM32F429/439 line	STM32F401xx STM32F410xx STM32F411xx STM32F412xx STM32F413xx STM32F423xx STM32F446xx

Module H41R60	Title H41R60_Backend
Description LQFP-100 STM32F4 MCU	Revision 0 Size Letter
Author	Sheet 1 of 1

Hexabitz
www.hexabitz.com