THIS DOCUMENT AND THE DATA DISCLOSED HEREIN OR HEREWITH IS THE PROPERTY OF ALTIUM LIMITED AND MAY BE FREELY DISTRIBUTED IN WHOLE. NO RIGHTS ARE RESERVED OR EXPRESS OR IMPLIED WARANTEE GIVEN.

| REVISION | DESCRIPTION | DATE | APPROVED |
|---|---|---|---|
| | | | |

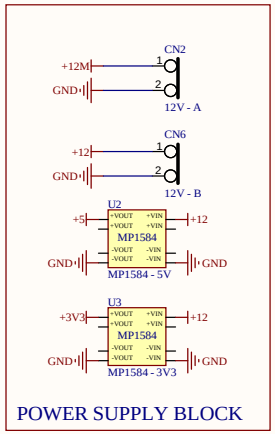


POWER SUPPLY BLOCK

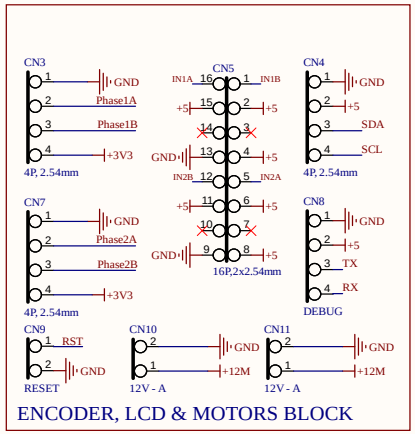


ENCODER, LCD & MOTORS BLOCK

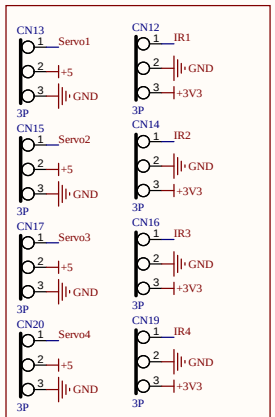


SERVO & SENSOR BLOCK

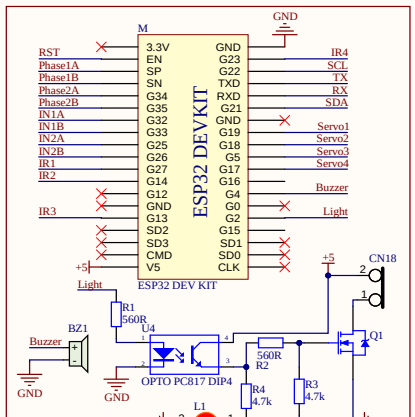


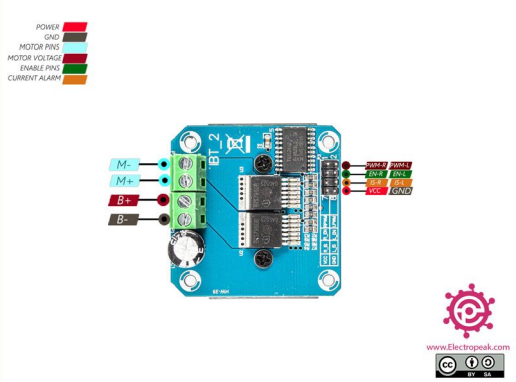


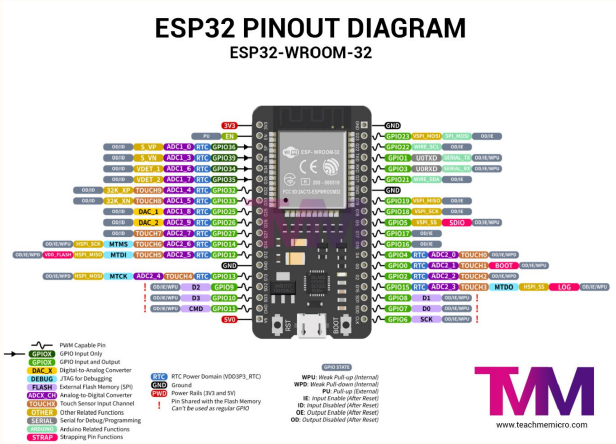


| APPROVALS | DATE |
|---|---|
| ENG: * | |
| DSN: * | |
| CHK: * | |
| REFERENCE DOCUMENTS | |
| BOM: | |
| ASSY DWG: | |
| FAB DWG: | |
| PCB DWG: | |

PROJECT: Altium *

PROJECT REVISION: Not in version control | DOCUMENT REVISION: Not in version control | DESIGN ITEM:

TITLE: *

| SIZE | CAGE CODE | DWG NO. | REV |
|---|---|---|---|
| B | | | |

SCALE: | FILE NAME: Schematic.SchDoc | SHEET 1 OF 2