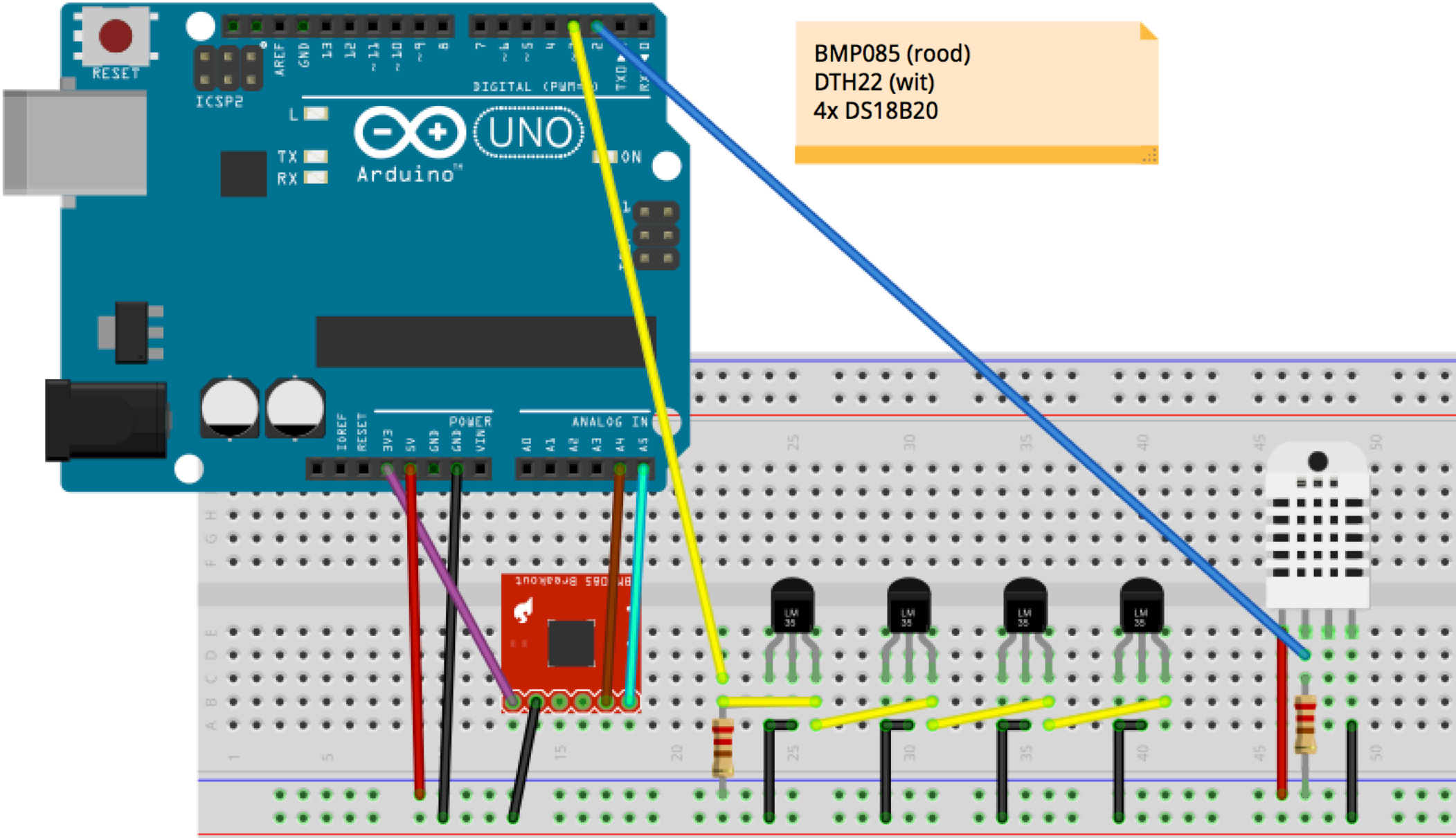
BMP085 (rood)
DTH22 (wit)
4x DS18B20
RESET
ICSP2
UNO
Arduino
DIGITAL (PWM~)
POWER
ANALOG IN
BMP085 Breakout