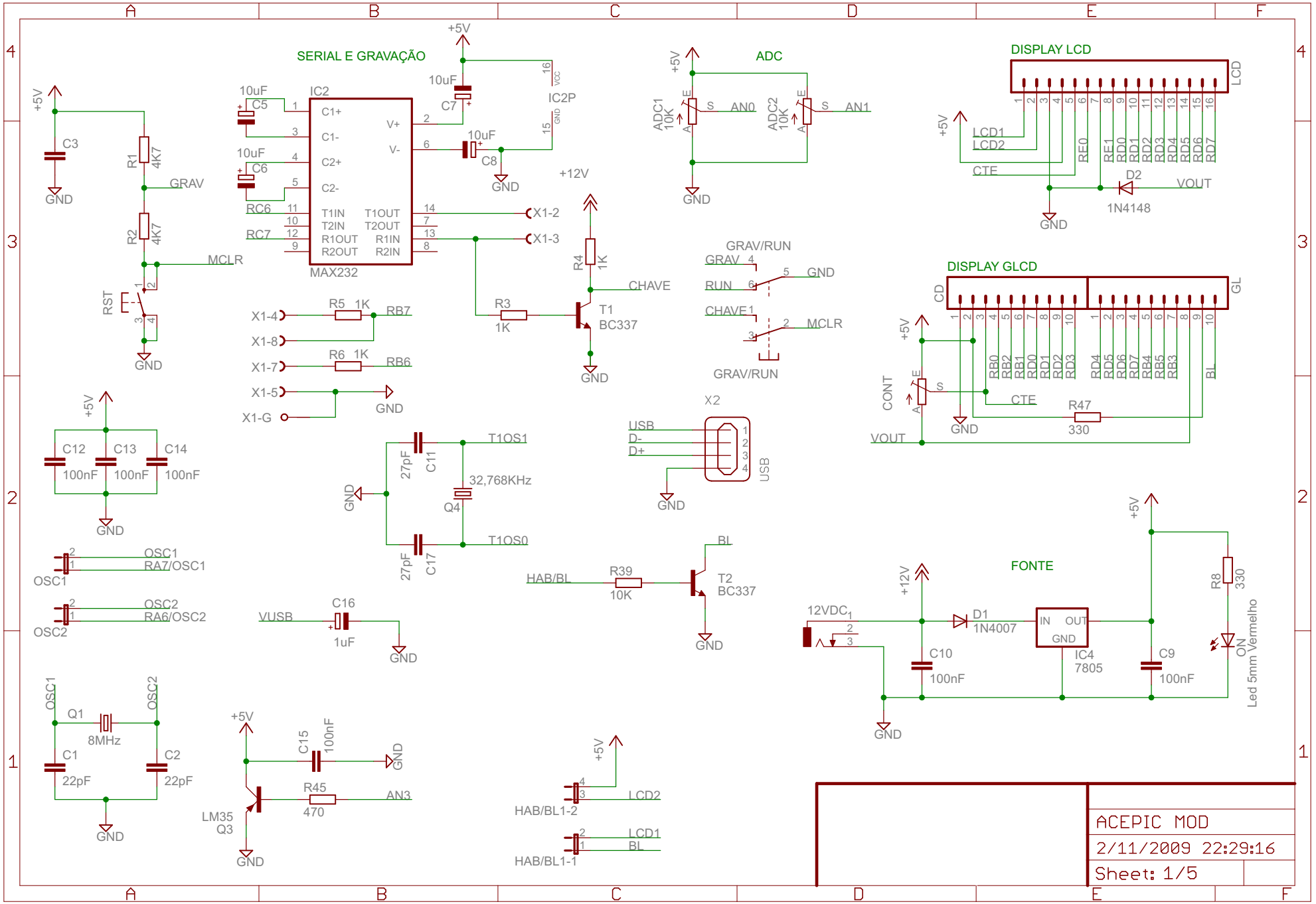

26/12/2009 10:12:48 H:\ACEPIC\Placas\ACEPIC MODULE\ACEPIC MOD.sch (Sheet: 1/5)

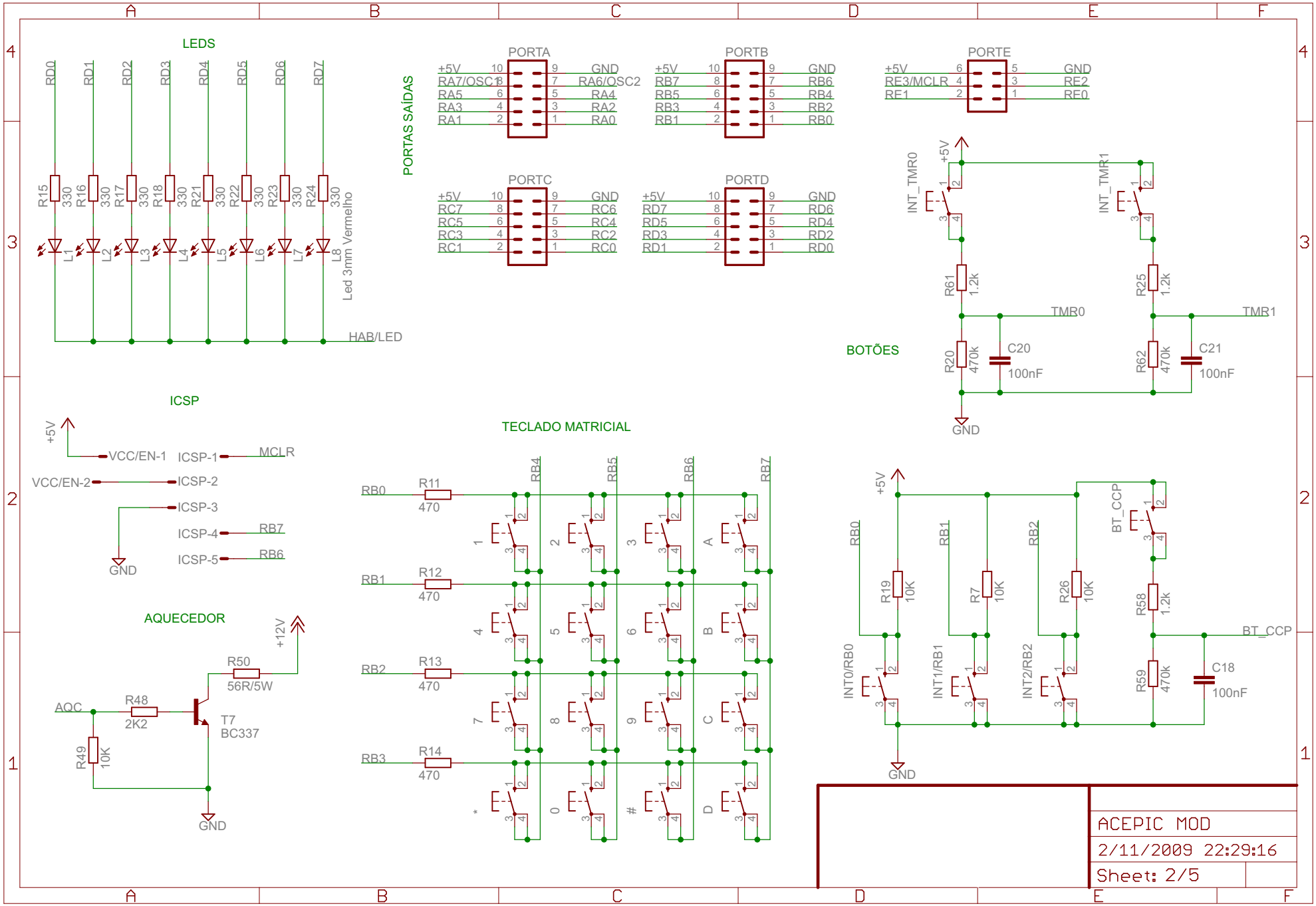
LEDS
RD0
RD1
RD2
RD3
RD4
RD5
RD6
RD7
R15 330
R16 330
R17 330
R18 330
R21 330
R22 330
R23 330
R24 330
L1
L2
L3
L4
L5
L6
L7
L8
Led 3mm Vermelho
HAB/LED
PORTAS SAÍDAS
PORTA
+5V 10
RA7/OSC1 8
RA5 6
RA3 4
RA1 2
9 GND
7 RA6/OSC2
5 RA4
3 RA2
1 RA0
PORTB
+5V 10
RB7 8
RB5 6
RB3 4
RB1 2
9 GND
7 RB6
5 RB4
3 RB2
1 RB0
PORTE
+5V 6
RE3/MCLR 4
RE1 2
5 GND
3 RE2
1 RE0
PORTC
+5V 10
RC7 8
RC5 6
RC3 4
RC1 2
9 GND
7 RC6
5 RC4
3 RC2
1 RC0
PORTD
+5V 10
RD7 8
RD5 6
RD3 4
RD1 2
9 GND
7 RD6
5 RD4
3 RD2
1 RD0
BOTÕES
INT_TMR0
INT_TMR1
+5V
R61 1.2k
R25 1.2k
TMR0
TMR1
R20 470k
C20 100nF
R62 470k
C21 100nF
GND
ICSP
+5V
VCC/EN-1
VCC/EN-2
ICSP-1
ICSP-2
ICSP-3
ICSP-4
ICSP-5
MCLR
RB7
RB6
GND
TECLADO MATRICIAL
RB0
RB1
RB2
RB3
R11 470
R12 470
R13 470
R14 470
RB4
RB5
RB6
RB7
1
2
3
A
4
5
6
B
7
8
9
C
*
0
#
D
AQUECEDOR
+12V
R50 56R/5W
AQC
R48 2K2
T7 BC337
R49 10K
GND
+5V
RB0
RB1
RB2
R19 10K
R7 10K
R26 10K
INT0/RB0
INT1/RB1
INT2/RB2
BT_CCP
R58 1.2k
R59 470k
C18 100nF
GND
ACEPIC MOD
2/11/2009 22:29:16
Sheet: 2/5

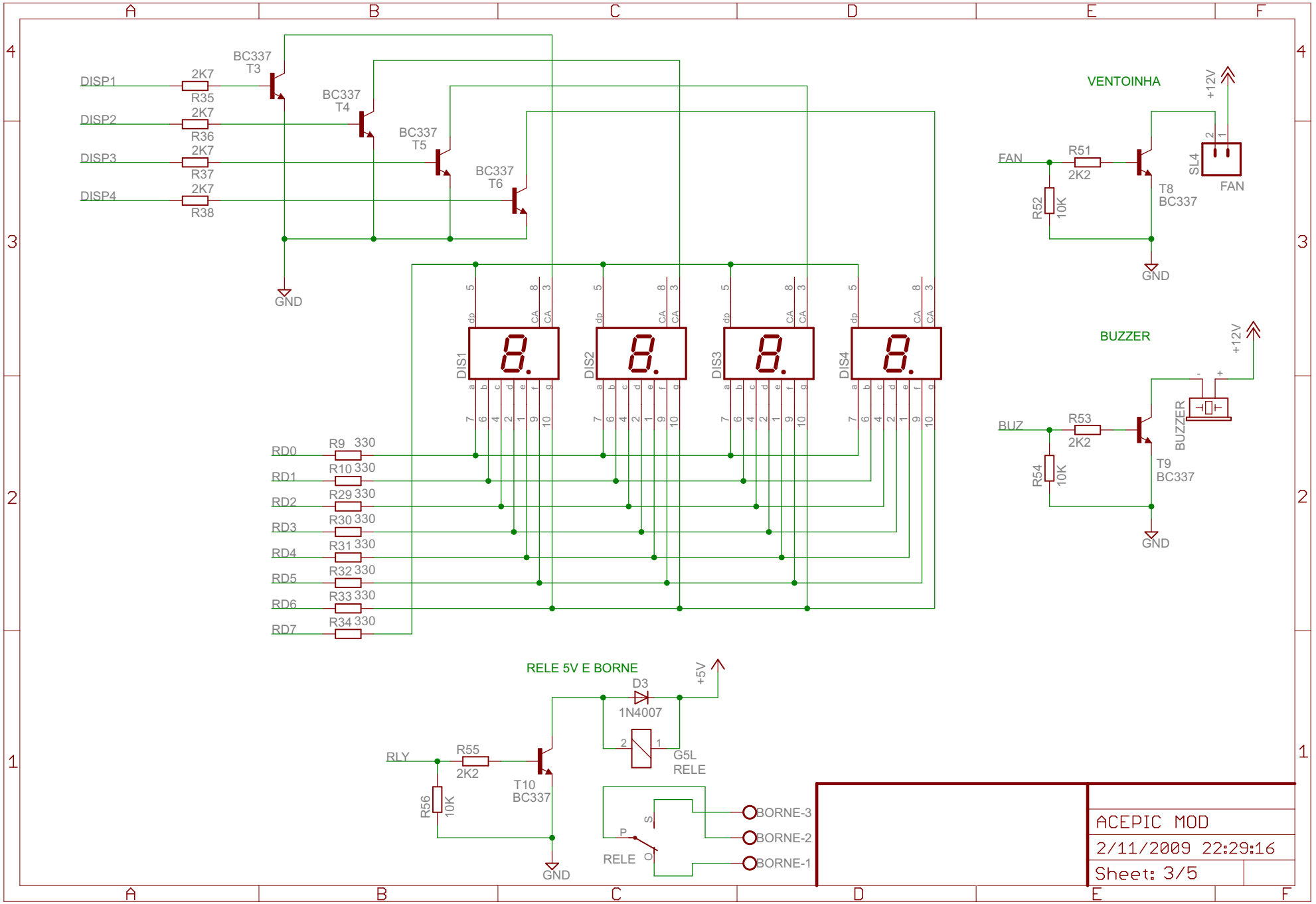
DISP1
DISP2
DISP3
DISP4
2K7
R35
R36
R37
R38
BC337
T3
T4
T5
T6
GND
DIS1
DIS2
DIS3
DIS4
RD0
RD1
RD2
RD3
RD4
RD5
RD6
RD7
R9 330
R10 330
R29 330
R30 330
R31 330
R32 330
R33 330
R34 330
VENTOINHA
+12V
FAN
R51
2K2
R52
10K
T8
BC337
SL4
BUZZER
BUZ
R53
R54
T9
RELE 5V E BORNE
+5V
D3
1N4007
RLY
R55
T10
R56
G5L
RELE
BORNE-3
BORNE-2
BORNE-1
ACEPIC MOD
2/11/2009 22:29:16
Sheet: 3/5

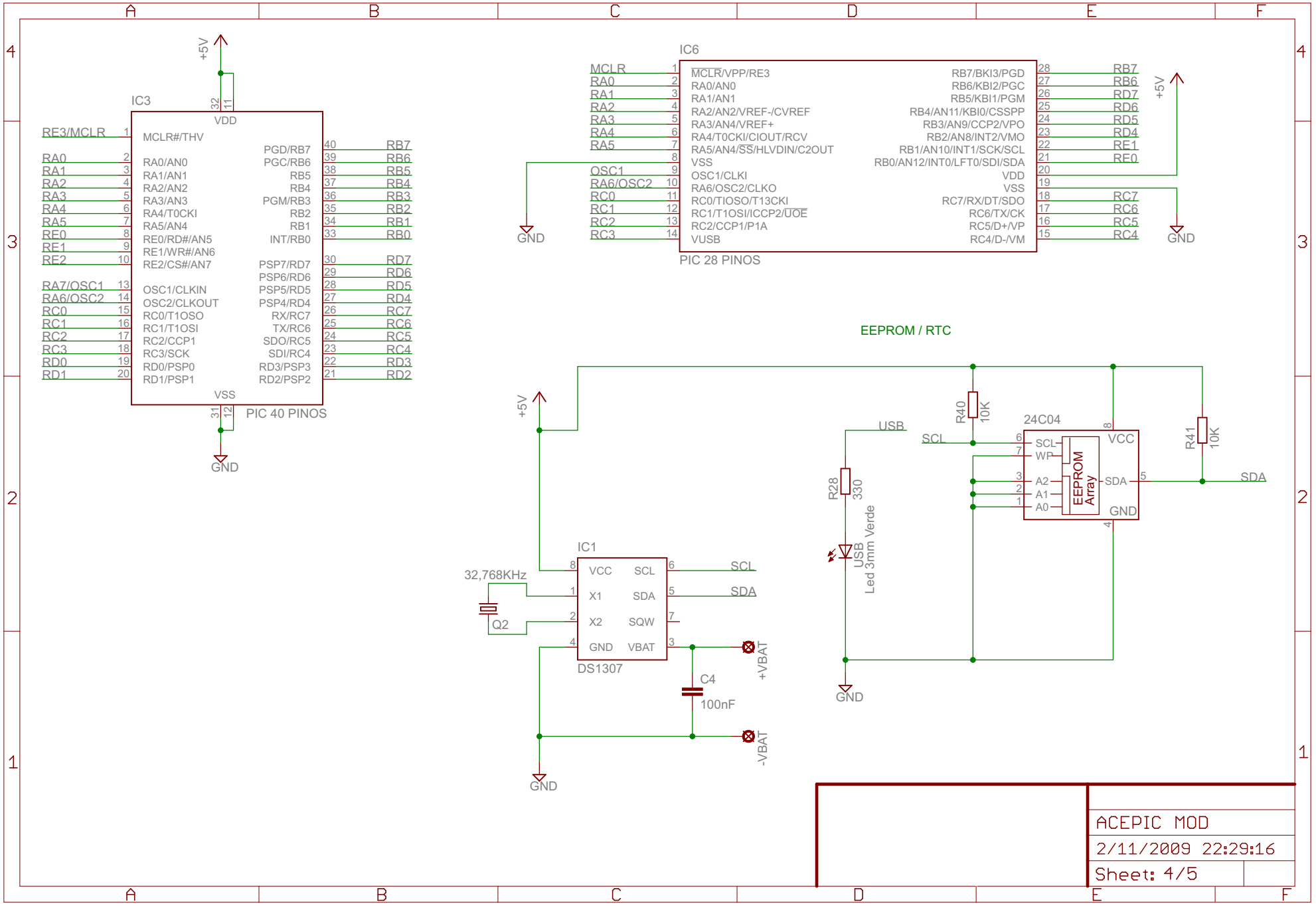
IC3
+5V
VDD
RE3/MCLR
MCLR#/THV
RA0
RA1
RA2
RA3
RA4
RA5
RE0
RE1
RE2
RA7/OSC1
RA6/OSC2
RC0
RC1
RC2
RC3
RD0
RD1
RA0/AN0
RA1/AN1
RA2/AN2
RA3/AN3
RA4/T0CKI
RA5/AN4
RE0/RD#/AN5
RE1/WR#/AN6
RE2/CS#/AN7
OSC1/CLKIN
OSC2/CLKOUT
RC0/T1OSO
RC1/T1OSI
RC2/CCP1
RC3/SCK
RD0/PSP0
RD1/PSP1
PGD/RB7
PGC/RB6
RB5
RB4
PGM/RB3
RB2
RB1
INT/RB0
PSP7/RD7
PSP6/RD6
PSP5/RD5
PSP4/RD4
RX/RC7
TX/RC6
SDO/RC5
SDI/RC4
RD3/PSP3
RD2/PSP2
RB7
RB6
RB5
RB4
RB3
RB2
RB1
RB0
RD7
RD6
RD5
RD4
RC7
RC6
RC5
RC4
RD3
RD2
VSS
GND
PIC 40 PINOS
IC6
MCLR
RA0
RA1
RA2
RA3
RA4
RA5
OSC1
RA6/OSC2
RC0
RC1
RC2
RC3
MCLR/VPP/RE3
RA0/AN0
RA1/AN1
RA2/AN2/VREF-/CVREF
RA3/AN4/VREF+
RA4/T0CKI/CIOUT/RCV
RA5/AN4/SS/HLVDIN/C2OUT
VSS
OSC1/CLKI
RA6/OSC2/CLKO
RC0/TIOSO/T13CKI
RC1/T1OSI/ICCP2/UOE
RC2/CCP1/P1A
VUSB
RB7/BKI3/PGD
RB6/KBI2/PGC
RB5/KBI1/PGM
RB4/AN11/KBI0/CSSPP
RB3/AN9/CCP2/VPO
RB2/AN8/INT2/VMO
RB1/AN10/INT1/SCK/SCL
RB0/AN12/INT0/LFT0/SDI/SDA
VDD
VSS
RC7/RX/DT/SDO
RC6/TX/CK
RC5/D+/VP
RC4/D-/VM
RB7
RB6
RD7
RD6
RD5
RD4
RE1
RE0
RC7
RC6
RC5
RC4
PIC 28 PINOS
EEPROM / RTC
IC1
32,768KHz
Q2
VCC
X1
X2
GND
SCL
SDA
SQW
VBAT
DS1307
C4
100nF
+VBAT
-VBAT
R40
10K
R41
10K
R28
330
USB
Led 3mm Verde
24C04
WP
A2
A1
A0
EEPROM Array
ACEPIC MOD
2/11/2009 22:29:16
Sheet: 4/5

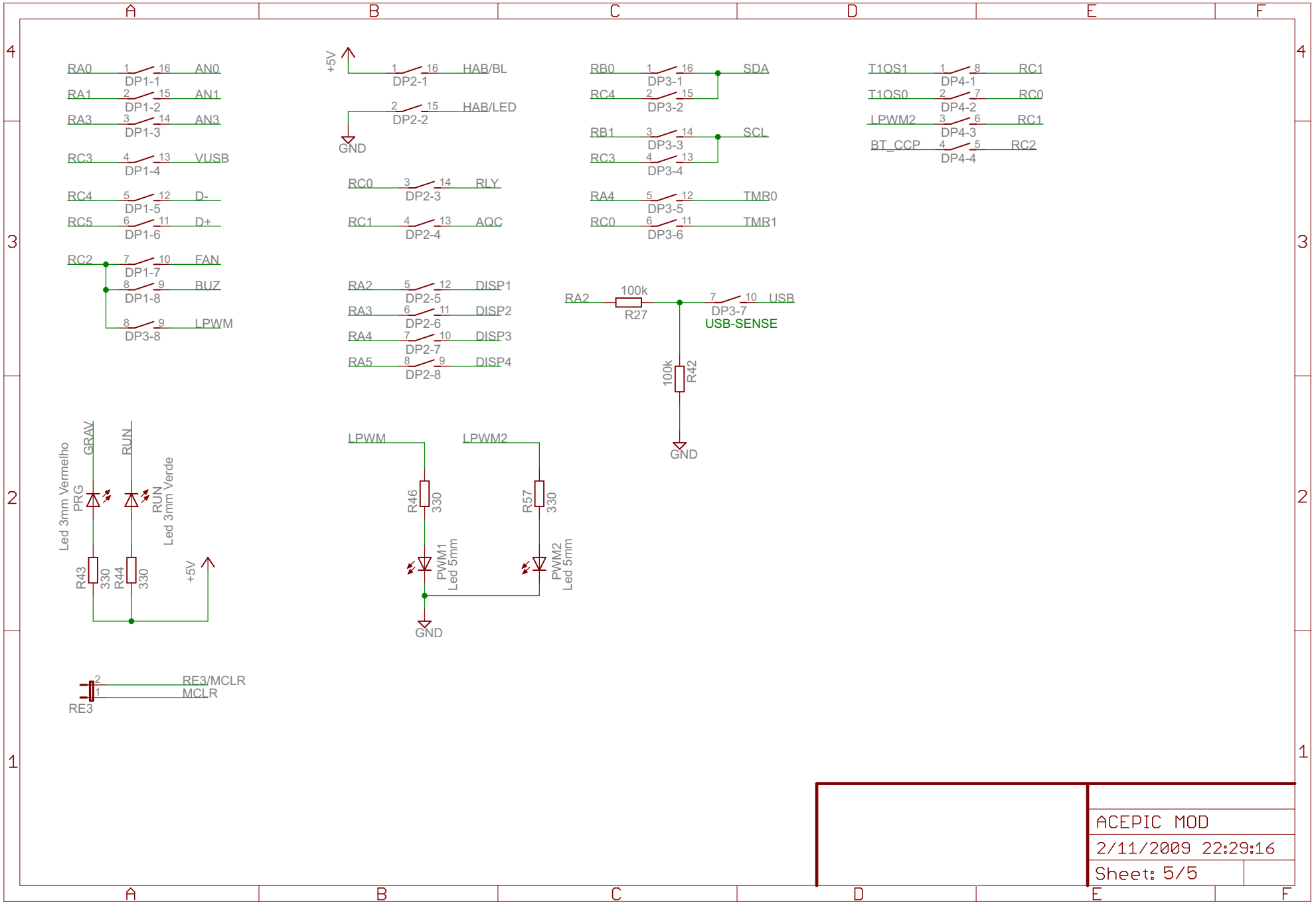
RA0 1 16 AN0
DP1-1
RA1 2 15 AN1
DP1-2
RA3 3 14 AN3
DP1-3
RC3 4 13 VUSB
DP1-4
RC4 5 12 D-
DP1-5
RC5 6 11 D+
DP1-6
RC2 7 10 FAN
DP1-7
8 9 BUZ
DP1-8
8 9 LPWM
DP3-8
+5V
1 16 HAB/BL
DP2-1
2 15 HAB/LED
DP2-2
GND
RC0 3 14 RLY
DP2-3
RC1 4 13 AQC
DP2-4
RA2 5 12 DISP1
DP2-5
RA3 6 11 DISP2
DP2-6
RA4 7 10 DISP3
DP2-7
RA5 8 9 DISP4
DP2-8
RB0 1 16 SDA
DP3-1
RC4 2 15
DP3-2
RB1 3 14 SCL
DP3-3
RC3 4 13
DP3-4
RA4 5 12 TMR0
DP3-5
RC0 6 11 TMR1
DP3-6
T1OS1 1 8 RC1
DP4-1
T1OS0 2 7 RC0
DP4-2
LPWM2 3 6 RC1
DP4-3
BT_CCP 4 5 RC2
DP4-4
RA2
100k
R27
7 10 USB
DP3-7
USB-SENSE
100k
R42
GND
Led 3mm Vermelho
GRAV
PRG
RUN
RUN
Led 3mm Verde
R43
330
R44
330
+5V
LPWM
LPWM2
R46
330
R57
330
PWM1
Led 5mm
PWM2
Led 5mm
GND
2
1
RE3/MCLR
MCLR
RE3
ACEPIC MOD
2/11/2009 22:29:16
Sheet: 5/5