XP1

Öåïü	Êîíò.
GND	1
GND	2
	3
	4
	5
	6
LINK100	7
	8
MDI_RX_N	9
MDI_TX_N	10
MDI_RX_P	11
MDI_TX_P	12
	13
ACT	14
CTREF	15
	16
$\overline{WAKE}$	17
	18
GPO0	19
$\overline{PWRBTN}$	20
GPI1	21
GPII0	22
GND	23
GND	24
GND	25
PWGIN	26
GPII2	27
$\overline{RSTBTN}$	28
	29
	30
	31
	32
	33
GND	34
	35
	36
	37
	38
GND	39
GND	40

GND

PCB_CARD_EDGE_230p
MXM edge

XP1

Öåïü	Êîíò.
	41
EXT_SDIO_CLK	42
EXT_SDIO_CD	43
	44
EXT_SDIO_CMD	45
	46
EXT_SDIO_PWR	47
EXT_SDIO_DAT1	48
EXT_SDIO_DAT0	49
EXT_SDIO_DAT3	50
EXT_SDIO_DAT2	51
	52
	53
	54
	55
	56
GND	57
GND	58
	59
I2C1_CLK	60
	61
I2C1_SDA	62
	63
	64
	65
I2C0_CLK	66
	67
I2C0_SDA	68
	69
	70
	71
	72
GND	73
GND	74
	75
	76
	77
	78
	79
	80

GND

PCB_CARD_EDGE_230p
MXM edge

XP1

Öåïü	Êîíò.
	81
	82
	83
	84
	85
	86
	87
	88
	89
	90
USB_VBUS	91
	92
	93
USB0_N	94
	95
USB0_P	96
GND	97
GND	98
	99
	100
	101
	102
	103
	104
	105
	106
	107
	108
	109
	110
	111
	112
	113
	114
	115
	116
GND	117
GND	118
	119
	120

USB_VBUS

GND

GND

PCB_CARD_EDGE_230p
MXM edge

XP1

Öåïü	Êîíò.
	121
	122
	123
	124
I2C2_SDA	125
	126
I2C2_CLK	127
	128
CAN_TX	129
CAN_RX	130
	131
	132
	133
	134
GND	135
GND	136
	137
	138
	139
	140
GND	141
GND	142
	143
	144
	145
	146
GND	147
GND	148
	149
	150
	151
	152
	153
	154
	155
	156
	157
	158
GND	159
GND	160

GND

GND

GND

PCB_CARD_EDGE_230p
MXM edge

XP1

Öåïü	Êîíò.
	161
	162
	163
	164
GND	165
GND	166
	167
	168
	169
	170
UART0_TX	171
UART0_RTS	172
	173
	174
	175
	176
UART0_RX	177
	178
	179
	180
	181
	182
GND	183
GND	184
Eth0_ACT	185
GPIO1	186
MCU_State_Anode	187
ADC_IN	188
DAC_OUT	189
UART1_TX	190
UART1_RX	191
USR1_Anode	192
VCC_RTS	193
	194
	195
	196
GND	197
GND	198
SPI_MOSI	199
$\overline{SPI\_CS0}$	200

GND

GND

VCC_RTS

GND

PCB_CARD_EDGE_230p
MXM edge

XP1

Öåïü	Êîíò.
SPI_MISO	201
	202
SPI_SCK	203
$\overline{JTAG\_TRST}$	204
VCC_SB_5V	205
VCC_SB_5V	206
JTAG_TCK	207
JTAG_TDI	208
JTAG_TDO	209
JTAG_TMS	210
	211
	212
	213
	214
	215
	216
	217
	218
VCC	219
VCC	220
VCC	221
VCC	222
VCC	223
VCC	224
VCC	225
VCC	226
VCC	227
VCC	228
VCC	229
VCC	230

VCC_SB_5V

VCC

PCB_CARD_EDGE_230p
MXM edge

VD3
SMAJ5.0A

GND

VCC
R94
0
VCC_SB_5V

+3.3V
R92
0
CTREF

CONTENT:

◆-01_Connector
◆-02_CPU_p1
◆-03_CPU_p2
◆-04_Miscellaneous

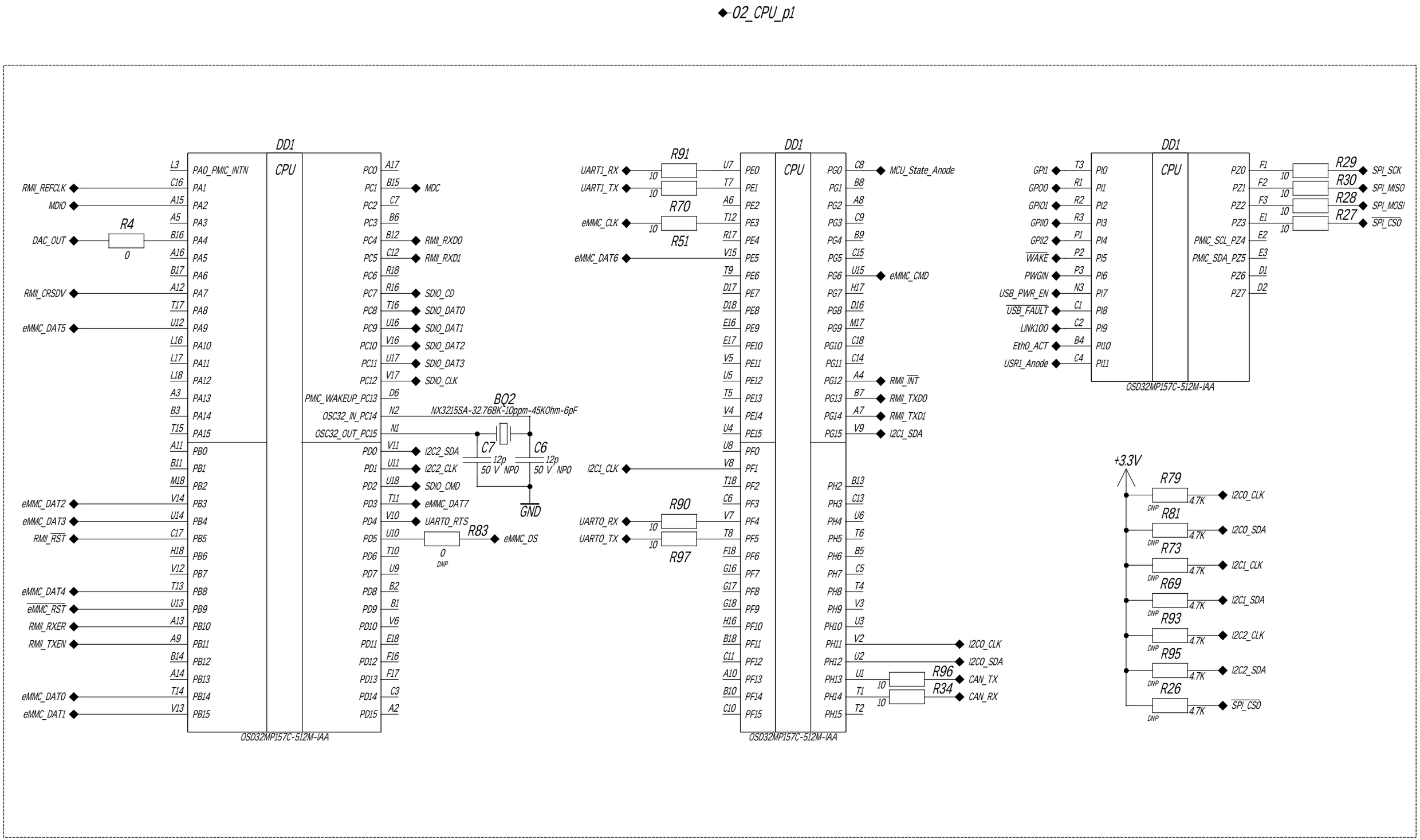

02_CPU_p1
DD1
CPU
OSD32MP157C-512M-IAA
RMII_REFCLK
MDIO
DAC_OUT
R4
0
RMII_CRSDV
eMMC_DAT5
eMMC_DAT2
eMMC_DAT3
RMII_RST
eMMC_DAT4
eMMC_RST
RMII_RXER
RMII_TXEN
eMMC_DAT0
eMMC_DAT1
PA0_PMIC_INTN
PA1
PA2
PA3
PA4
PA5
PA6
PA7
PA8
PA9
PA10
PA11
PA12
PA13
PA14
PA15
PB0
PB1
PB2
PB3
PB4
PB5
PB6
PB7
PB8
PB9
PB10
PB11
PB12
PB13
PB14
PB15
PC0
PC1
PC2
PC3
PC4
PC5
PC6
PC7
PC8
PC9
PC10
PC11
PC12
PMIC_WAKEUP_PC13
OSC32_IN_PC14
OSC32_OUT_PC15
PD0
PD1
PD2
PD3
PD4
PD5
PD6
PD7
PD8
PD9
PD10
PD11
PD12
PD13
PD14
PD15
MDC
RMII_RXD0
RMII_RXD1
SDIO_CD
SDIO_DAT0
SDIO_DAT1
SDIO_DAT2
SDIO_DAT3
SDIO_CLK
BQ2
NX3215SA-32.768K-10ppm-45KOhm-6pF
C7
12p
50 V NP0
C6
12p
50 V NP0
GND
I2C2_SDA
I2C2_CLK
SDIO_CMD
eMMC_DAT7
UART0_RTS
R83
0
DNP
eMMC_DS
UART1_RX
UART1_TX
eMMC_CLK
eMMC_DAT6
R91
R70
R51
10
I2C1_CLK
UART0_RX
UART0_TX
R90
R97
PE0
PE1
PE2
PE3
PE4
PE5
PE6
PE7
PE8
PE9
PE10
PE11
PE12
PE13
PE14
PE15
PF0
PF1
PF2
PF3
PF4
PF5
PF6
PF7
PF8
PF9
PF10
PF11
PF12
PF13
PF14
PF15
PG0
PG1
PG2
PG3
PG4
PG5
PG6
PG7
PG8
PG9
PG10
PG11
PG12
PG13
PG14
PG15
PH2
PH3
PH4
PH5
PH6
PH7
PH8
PH9
PH10
PH11
PH12
PH13
PH14
PH15
MCU_State_Anode
eMMC_CMD
RMII_INT
RMII_TXD0
RMII_TXD1
I2C1_SDA
I2C0_CLK
I2C0_SDA
R96
R34
CAN_TX
CAN_RX
GPI1
GPO0
GPIO1
GPII0
GPII2
WAKE
PWGIN
USB_PWR_EN
USB_FAULT
LINK100
Eth0_ACT
USR1_Anode
PI0
PI1
PI2
PI3
PI4
PI5
PI6
PI7
PI8
PI9
PI10
PI11
PZ0
PZ1
PZ2
PZ3
PMIC_SCL_PZ4
PMIC_SDA_PZ5
PZ6
PZ7
R29
R30
R28
R27
SPI_SCK
SPI_MISO
SPI_MOSI
SPI_CS0
+3.3V
R79
R81
R73
R69
R93
R95
R26
4.7K
DNP
I2C0_CLK
I2C0_SDA
I2C1_CLK
I2C1_SDA
I2C2_CLK
I2C2_SDA
SPI_CS0

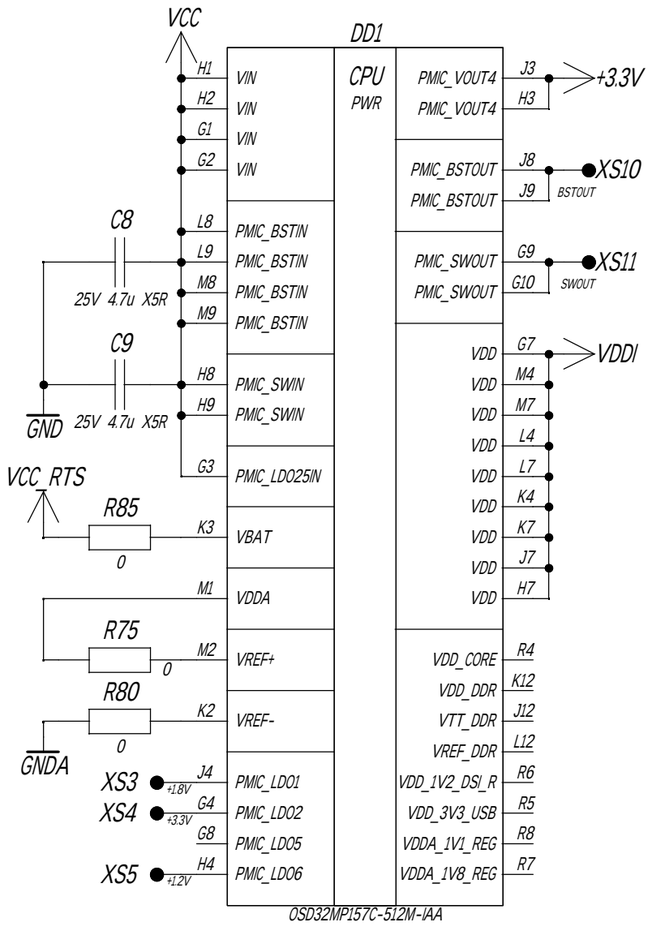
VCC
DD1
CPU
PWR
H1 VIN
H2 VIN
G1 VIN
G2 VIN
C8
25V 4.7u X5R
L8 PMIC_BSTIN
L9 PMIC_BSTIN
M8 PMIC_BSTIN
M9 PMIC_BSTIN
C9
25V 4.7u X5R
GND
H8 PMIC_SWIN
H9 PMIC_SWIN
G3 PMIC_LDO25IN
VCC_RTS
R85
0
K3 VBAT
M1 VDDA
R75
0
M2 VREF+
R80
0
GNDA
K2 VREF-
XS3 +1.8V J4 PMIC_LDO1
XS4 +3.3V G4 PMIC_LDO2
G8 PMIC_LDO5
XS5 +1.2V H4 PMIC_LDO6
PMIC_VOUT4 J3
PMIC_VOUT4 H3
+3.3V
PMIC_BSTOUT J8
PMIC_BSTOUT J9
XS10
BSTOUT
PMIC_SWOUT G9
PMIC_SWOUT G10
XS11
SWOUT
VDD G7
VDD M4
VDD M7
VDD L4
VDD L7
VDD K4
VDD K7
VDD J7
VDD H7
VDDI
VDD_CORE R4
VDD_DDR K12
VTT_DDR J12
VREF_DDR L12
VDD_1V2_DSI_R R6
VDD_3V3_USB R5
VDDA_1V1_REG R8
VDDA_1V8_REG R7
OSD32MP157C-512M-IAA

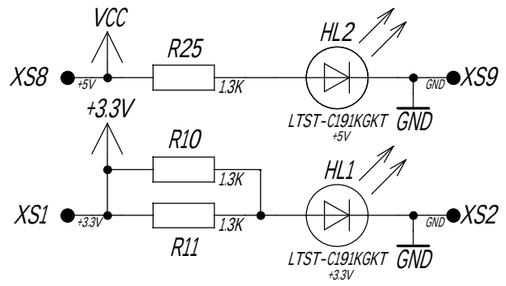
VCC
XS8 +5V
R25
1.3K
HL2
LTST-C191KGKT
+5V
GND
XS9
+3.3V
R10
1.3K
XS1 +3.3V
1.3K
R11
HL1
LTST-C191KGKT
+3.3V
GND
XS2

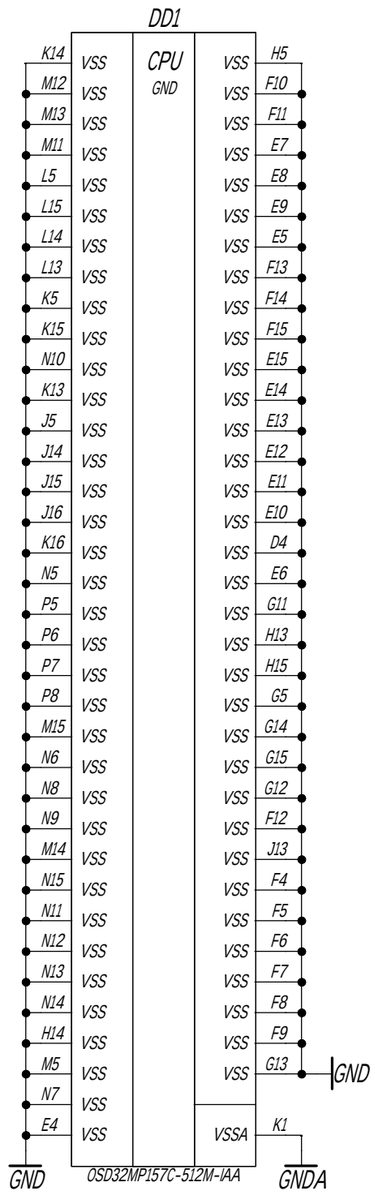
DD1
CPU
GND
K14 VSS
M12 VSS
M13 VSS
M11 VSS
L5 VSS
L15 VSS
L14 VSS
L13 VSS
K5 VSS
K15 VSS
N10 VSS
K13 VSS
J5 VSS
J14 VSS
J15 VSS
J16 VSS
K16 VSS
N5 VSS
P5 VSS
P6 VSS
P7 VSS
P8 VSS
M15 VSS
N6 VSS
N8 VSS
N9 VSS
M14 VSS
N15 VSS
N11 VSS
N12 VSS
N13 VSS
N14 VSS
H14 VSS
M5 VSS
N7 VSS
E4 VSS
VSS H5
VSS F10
VSS F11
VSS E7
VSS E8
VSS E9
VSS E5
VSS F13
VSS F14
VSS F15
VSS E15
VSS E14
VSS E13
VSS E12
VSS E11
VSS E10
VSS D4
VSS E6
VSS G11
VSS H13
VSS H15
VSS G5
VSS G14
VSS G15
VSS G12
VSS F12
VSS J13
VSS F4
VSS F5
VSS F6
VSS F7
VSS F8
VSS F9
VSS G13
GND
VSSA K1
GND
OSD32MP157C-512M-IAA
GNDA

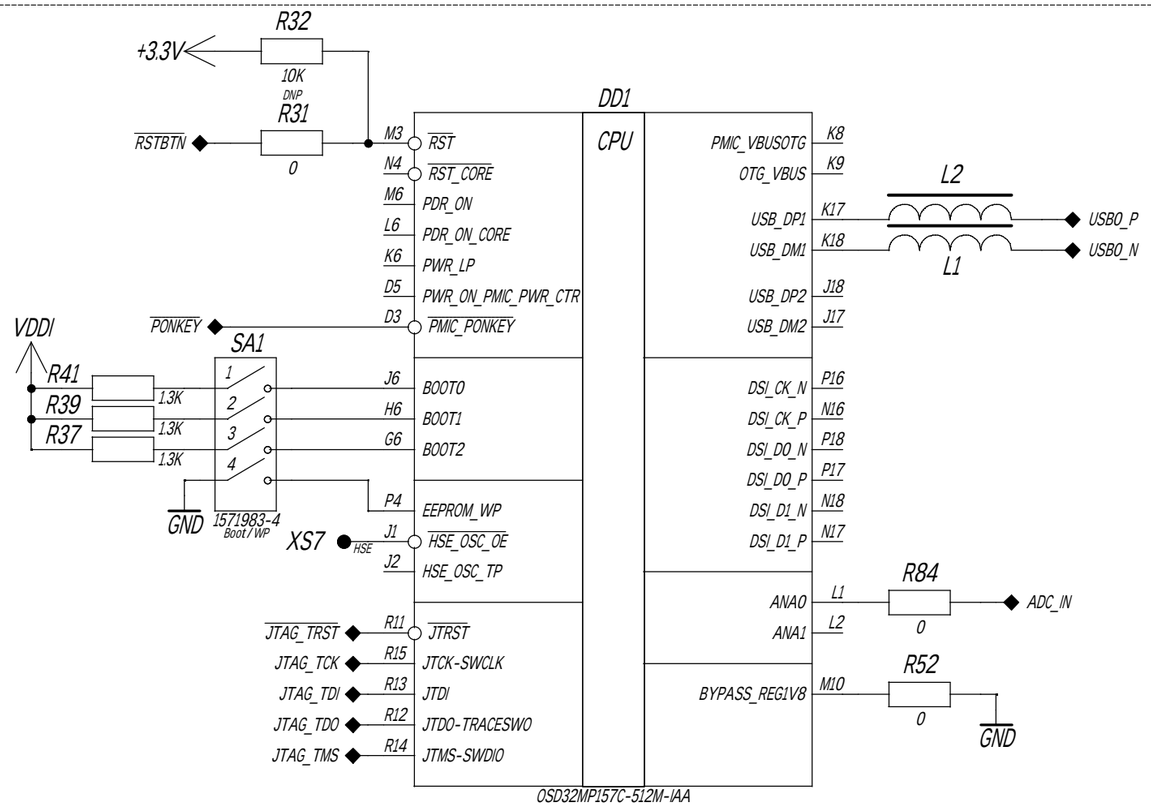
+3.3V
R32
10K
DNP
R31
RSTBTN
0
DD1
CPU
M3 RST
N4 RST_CORE
M6 PDR_ON
L6 PDR_ON_CORE
K6 PWR_LP
D5 PWR_ON_PMIC_PWR_CTR
D3 PMIC_PONKEY
PONKEY
VDDI
R41
R39
R37
1.3K
1.3K
1.3K
SA1
1
2
3
4
GND
1571983-4
Boot/WP
J6 BOOT0
H6 BOOT1
G6 BOOT2
P4 EEPROM_WP
XS7
HSE
J1 HSE_OSC_OE
J2 HSE_OSC_TP
JTAG_TRST R11 JTRST
JTAG_TCK R15 JTCK-SWCLK
JTAG_TDI R13 JTDI
JTAG_TDO R12 JTDO-TRACESWO
JTAG_TMS R14 JTMS-SWDIO
PMIC_VBUSOTG K8
OTG_VBUS K9
L2
USB_DP1 K17
USB_DM1 K18
L1
USB0_P
USB0_N
USB_DP2 J18
USB_DM2 J17
DSI_CK_N P16
DSI_CK_P N16
DSI_D0_N P18
DSI_D0_P P17
DSI_D1_N N18
DSI_D1_P N17
ANA0 L1
ANA1 L2
R84
0
ADC_IN
BYPASS_REG1V8 M10
R52
0
GND
OSD32MP157C-512M-IAA

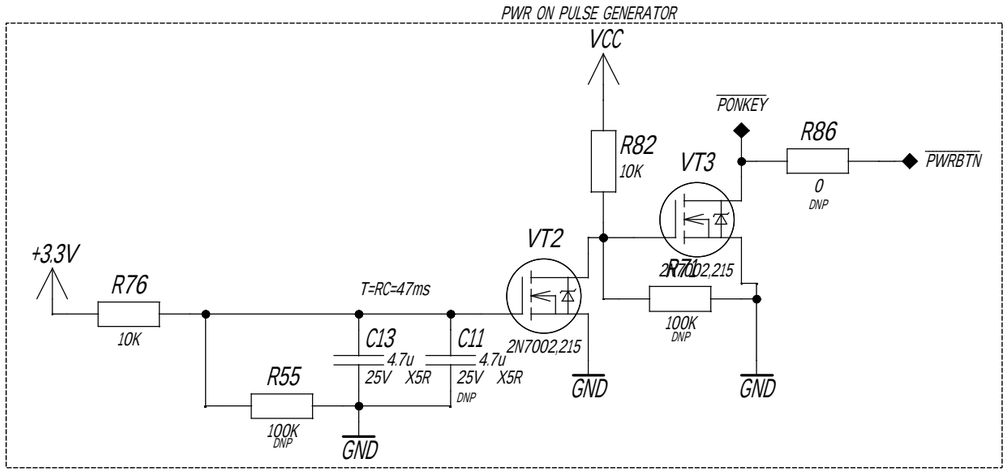
PWR ON PULSE GENERATOR
VCC
PONKEY
R82
10K
VT3
R86
0
DNP
PWRBTN
+3.3V
R76
10K
T=RC=47ms
VT2
2N7002,215
R71
100K
DNP
C13
4.7u
25V X5R
C11
4.7u
25V X5R
DNP
2N7002,215
R55
100K
DNP
GND
GND
GND

04_Miscellaneous

Ethernet 10/100Mb

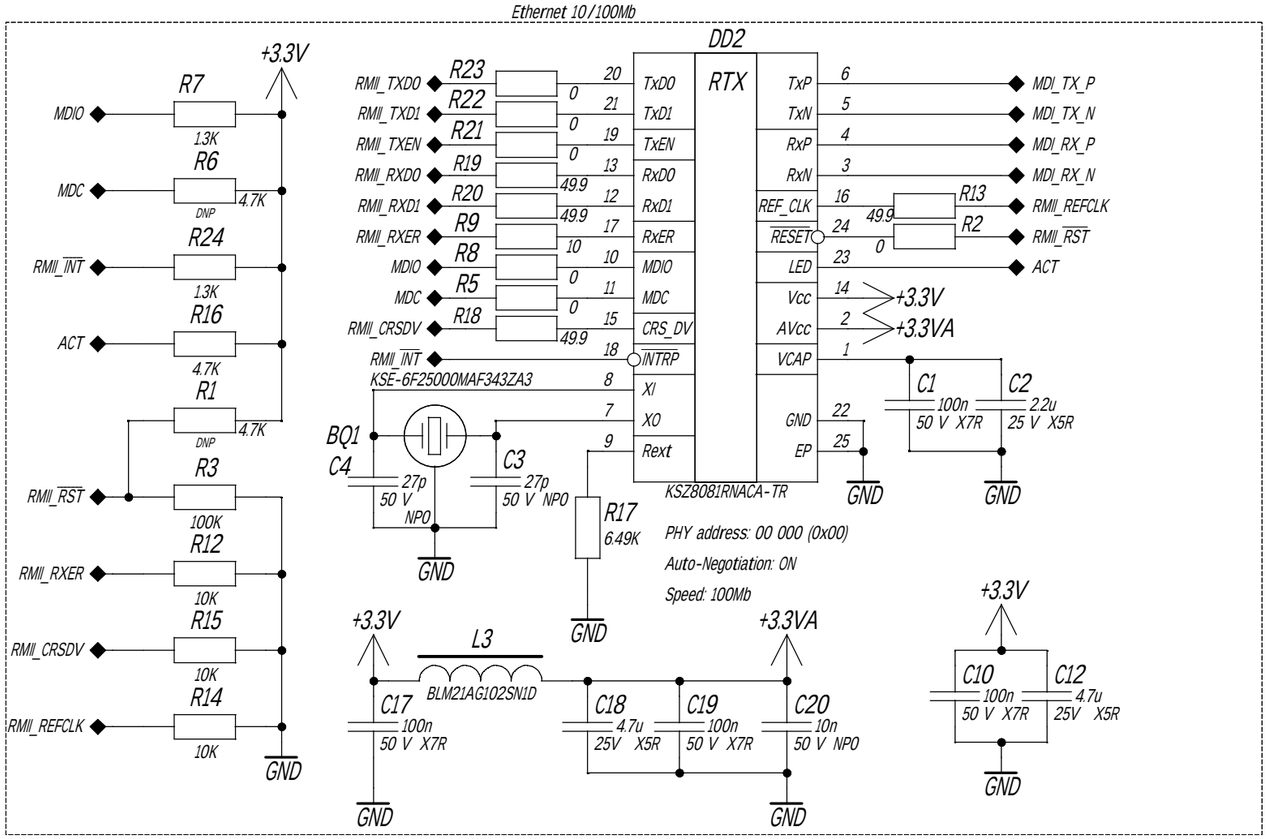

eMMC

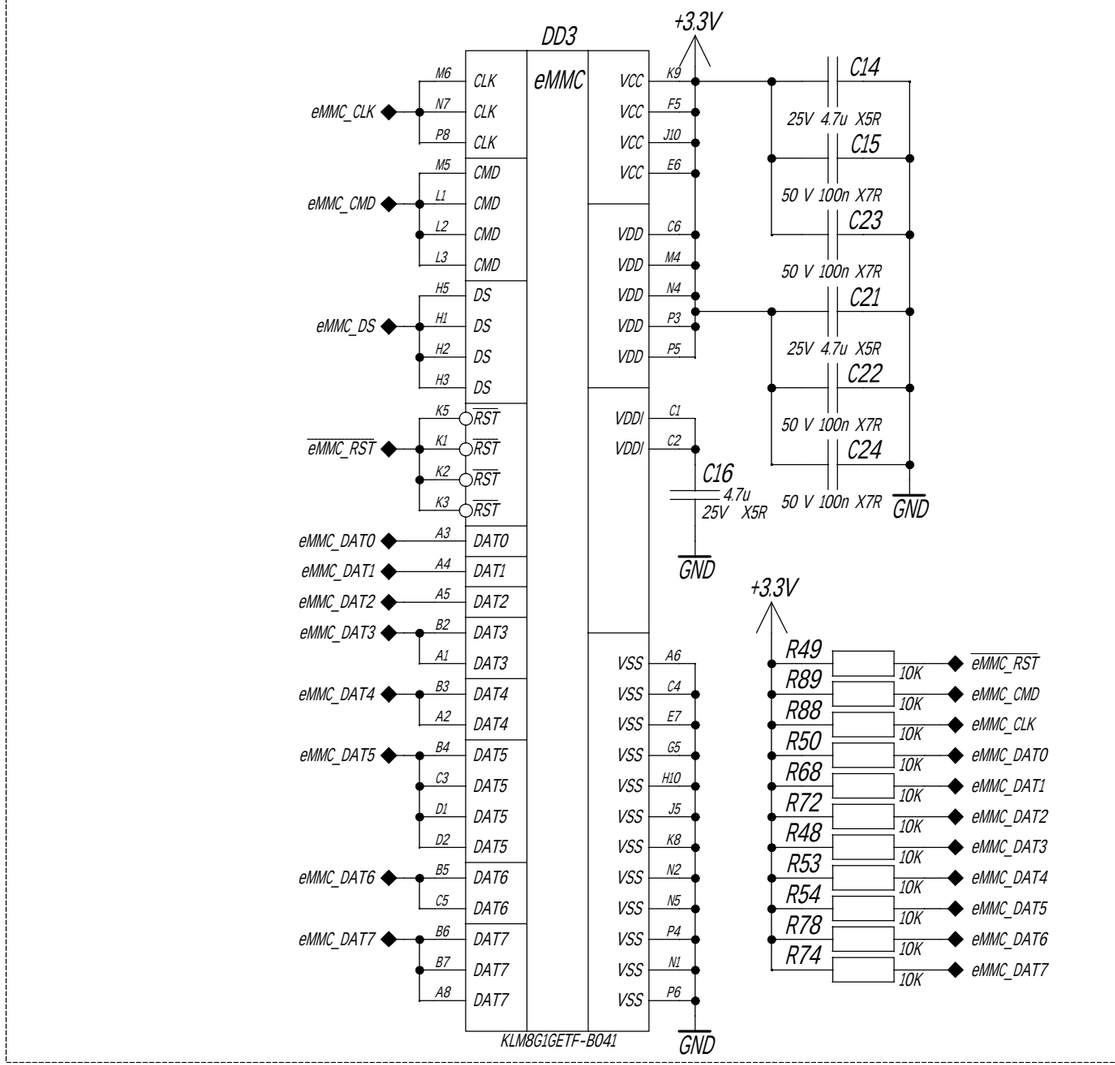

Onboard uSD Card (Do Not Populate by default)

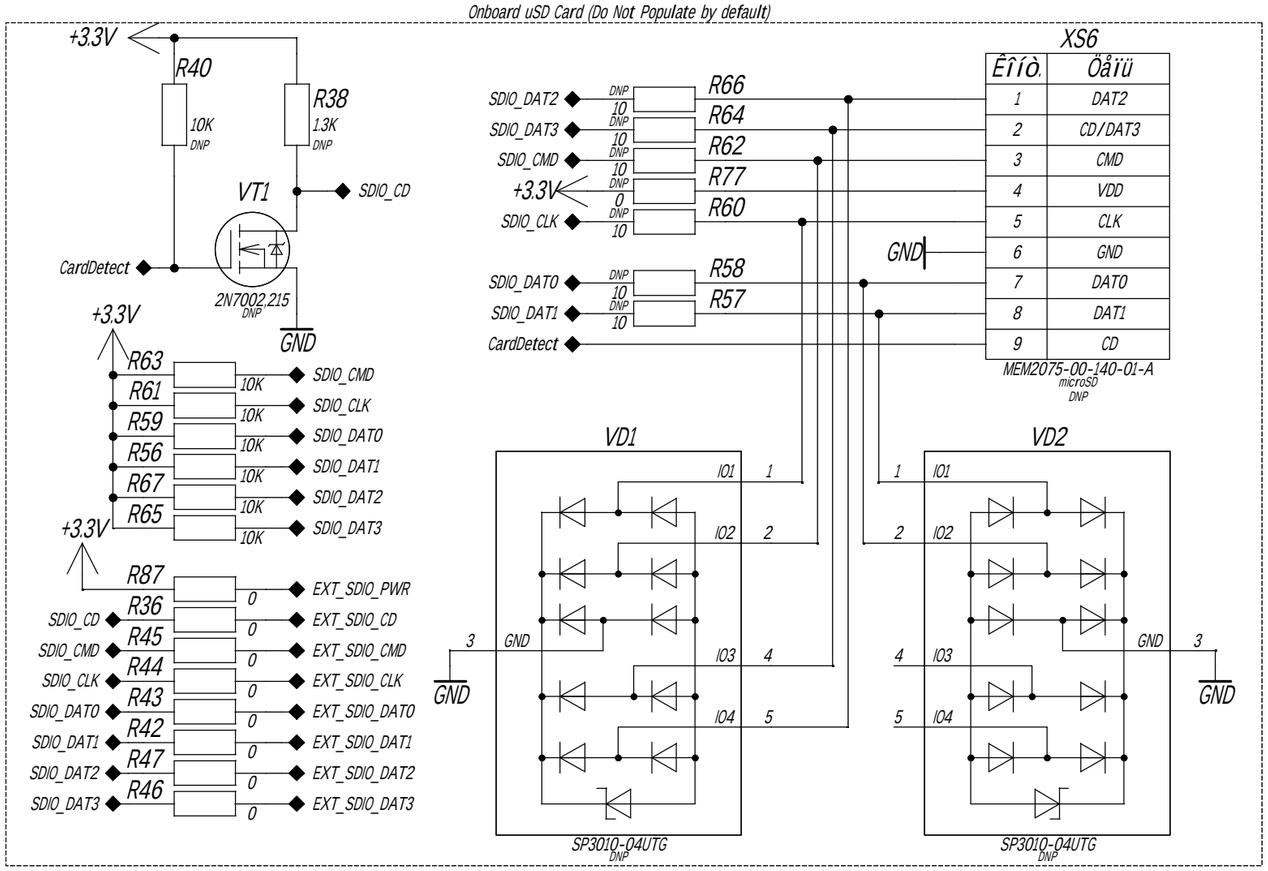
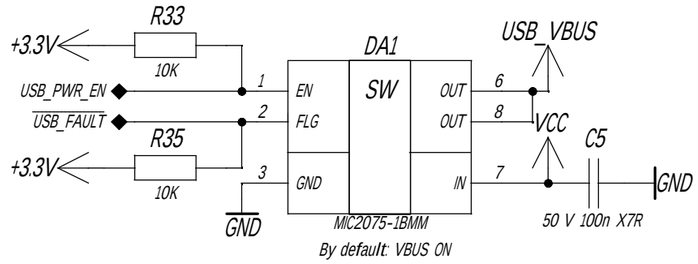
USB VBUS OUTPUT CONTROL