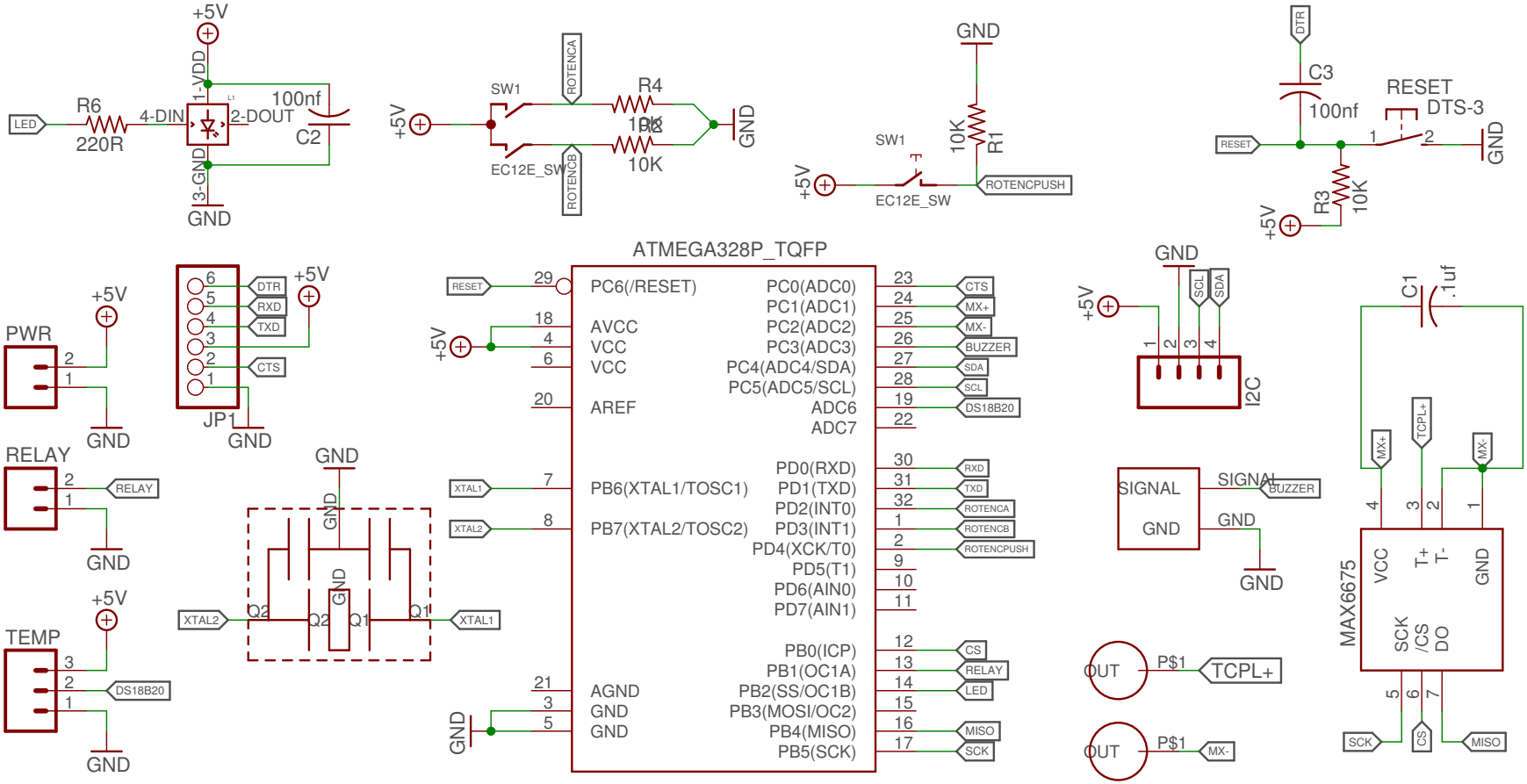
+5V
1-VDD
2-DOUT
3-GND
4-DIN
LED
R6
220R
100nf
C2
GND
SW1
EC12E_SW
ROTENCA
ROTENCB
R4
10K
R2
10K
GND
SW1
EC12E_SW
10K
R1
ROTENCPUSH
DTR
C3
100nf
RESET
DTS-3
RESET
R3
10K
ATMEGA328P_TQFP
PC6(/RESET)
AVCC
VCC
VCC
AREF
PB6(XTAL1/TOSC1)
PB7(XTAL2/TOSC2)
AGND
GND
GND
PC0(ADC0)
PC1(ADC1)
PC2(ADC2)
PC3(ADC3)
PC4(ADC4/SDA)
PC5(ADC5/SCL)
ADC6
ADC7
PD0(RXD)
PD1(TXD)
PD2(INT0)
PD3(INT1)
PD4(XCK/T0)
PD5(T1)
PD6(AIN0)
PD7(AIN1)
PB0(ICP)
PB1(OC1A)
PB2(SS/OC1B)
PB3(MOSI/OC2)
PB4(MISO)
PB5(SCK)
CTS
MX+
MX-
BUZZER
SDA
SCL
DS18B20
RXD
TXD
ROTENCA
ROTENCB
ROTENCPUSH
CS
RELAY
LED
MISO
SCK
XTAL1
XTAL2
PWR
RELAY
TEMP
DS18B20
JP1
DTR
RXD
TXD
CTS
Q1
Q2
I2C
SCL
SDA
SIGNAL
GND
BUZZER
OUT
P$1
TCPL+
MX-
C1
.1uf
MAX6675
VCC
T+
T-
GND
SCK
/CS
DO
MX+
TCPL+
MX-
SCK
CS
MISO