Industrial Internship Report on

”IV Drip Monitoring System”

Prepared by

Hinduja Shri M G

Executive Summary
This report provides details of the Industrial Internship provided by upskill Campus and The IoT Academy in collaboration with Industrial Partner UniConverge Technologies Pvt Ltd (UCT). The internship was focused on solving an industry-oriented project within six weeks. My project was based on the development of an IV Drip Monitoring System for healthcare monitoring applications. The main objective of the project was to monitor IV drip condition and generate alert indication when the fluid level reaches a critical stage. The system was developed using ESP32, LED, buzzer, and simulation-based embedded programming logic. During the internship period, learning modules were completed on IoT architecture, IoT devices and platforms, embedded systems, IoT deployment challenges, and embedded circuit design. Weekly progress reports were submitted regularly based on project development and implementation activities. The project work progressed through stages including system understanding, component selection, simulation development, alert logic improvement, and patient detail handling features. Simulation was used to verify system behavior and monitoring response. This internship provided practical exposure to embedded systems, simulation tools, healthcare monitoring concepts, and technical documentation. It was a valuable learning experience in understanding industrial project execution and technical problem solving.

TABLE OF CONTENTS

1 Preface 3

2 Introduction 4

2.1 About UniConverge Technologies Pvt Ltd 4

2.2 About upskill Campus 8

2.3 Objective 9

2.4 Reference 9

2.5 Glossary 10

3 Problem Statement 11

4 Existing and Proposed solution 12

5 Proposed Design/ Model 13

5.1 High Level Diagram (if applicable) 13

5.2 Low Level Diagram (if applicable) 13

5.3 Interfaces (if applicable) 13

6 Performance Test 14

6.1 Test Plan/ Test Cases 14

6.2 Test Procedure 14

6.3 Performance Outcome 14

7 My learnings 15

8 Future work scope 16

1 Preface

This internship was carried out over a period of six weeks under the guidance of upskill Campus, The IoT Academy, and UniConverge Technologies Pvt Ltd as part of an industry-oriented technical learning program.

The internship was designed to provide both theoretical exposure and practical implementation experience through structured weekly learning modules and project-based development. During the internship period, learning resources were provided on topics such as IoT architecture, IoT devices and platforms, embedded systems, IoT deployment challenges, and embedded circuit design.

The assigned project during the internship was IV Drip Monitoring System, developed for healthcare monitoring applications. The project focused on designing a basic embedded monitoring system capable of identifying IV-related conditions and generating alert indications when attention is required.

The project work progressed through multiple stages including system understanding, component selection, simulation setup, monitoring logic development, alert implementation using LED and buzzer, and system refinement. Patient detail handling was also considered as part of improving the monitoring concept.

This internship provided practical exposure to embedded programming, simulation tools, circuit understanding, and technical report preparation. It also strengthened practical understanding of Medical Electronics and IoT applications.

I sincerely thank upskill Campus, The IoT Academy, UniConverge Technologies Pvt Ltd, and all mentors who directly or indirectly supported the successful completion of this internship work.

2 Introduction

2.1 About UniConverge Technologies Pvt Ltd

A company established in 2013 and working in Digital Transformation domain and providing Industrial solutions with prime focus on sustainability and RoI.

For developing its products and solutions it is leveraging various **Cutting Edge Technologies e.g. Internet of Things (IoT), Cyber Security, Cloud computing (AWS, Azure), Machine Learning, Communication Technologies (4G/5G/LoRaWAN), Java Full Stack, Python, Front end** etc.

i. UCT IoT Platform (uct Insight)

UCT Insight is an IOT platform designed for quick deployment of IOT applications on the same time providing valuable "insight" for your process/business. It has been built in Java for backend and ReactJS for Front end. It has support for MySQL and various NoSql Databases.

- It enables device connectivity via industry standard IoT protocols - MQTT, CoAP, HTTP, Modbus TCP, OPC UA
- It supports both cloud and on-premises deployments.

It has features to

- Build Your own dashboard
- Analytics and Reporting
- Alert and Notification
- Integration with third party application(Power BI, SAP, ERP)
- Rule Engine

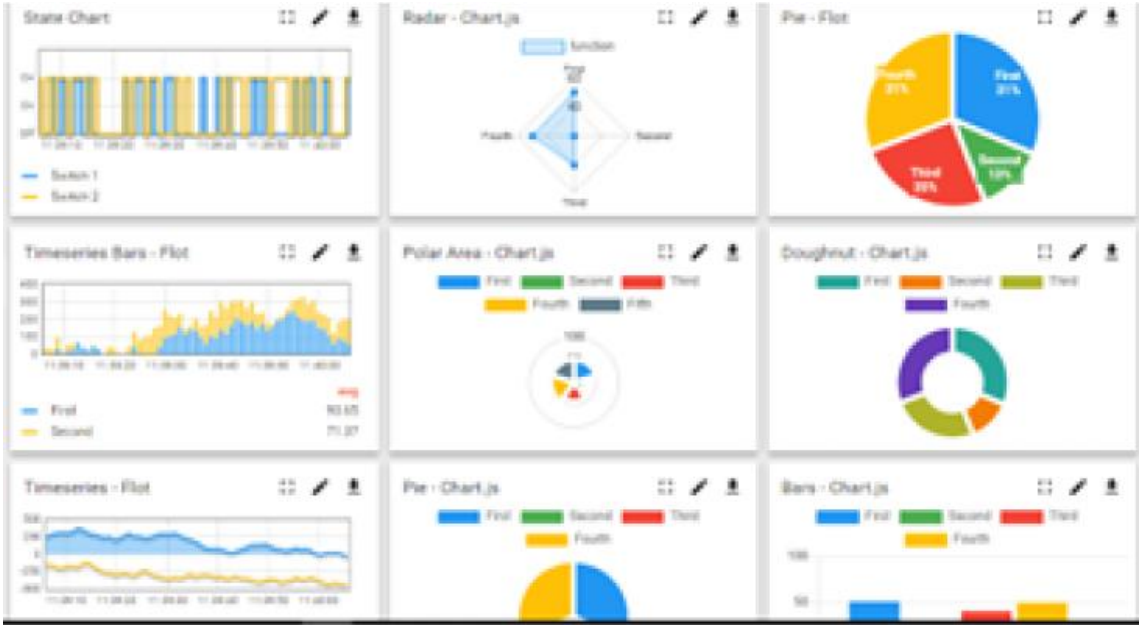

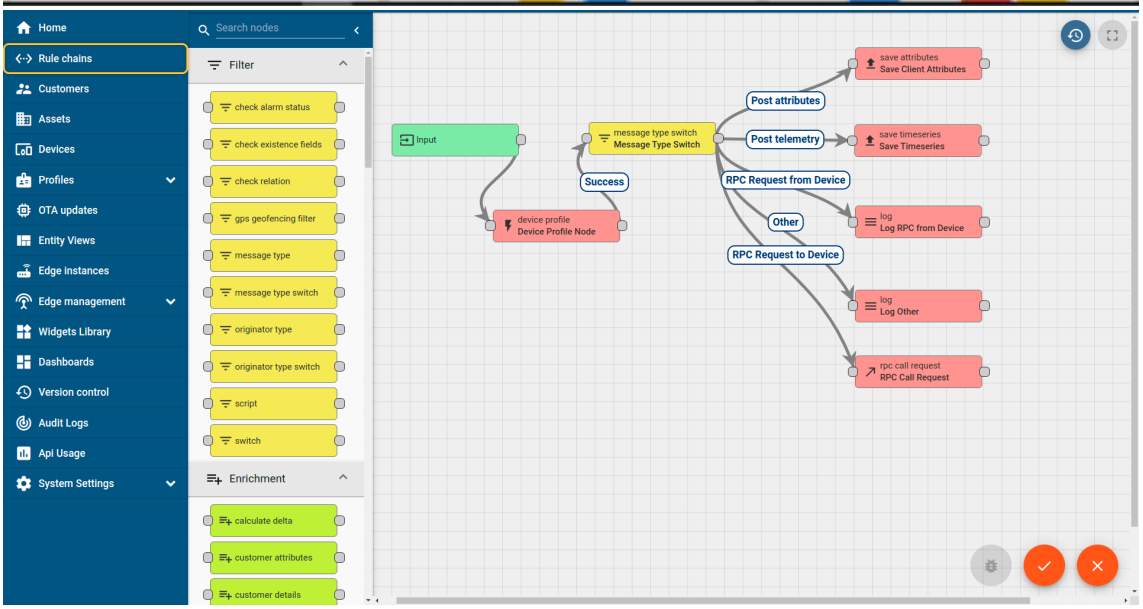

ii. Smart Factory Platform (FACTORY WATCH)

Factory watch is a platform for smart factory needs.

It provides Users/ Factory

- with a scalable solution for their Production and asset monitoring
- OEE and predictive maintenance solution scaling up to digital twin for your assets.
- to unleased the true potential of the data that their machines are generating and helps to identify the KPIs and also improve them.
- A modular architecture that allows users to choose the service that they what to start and then can scale to more complex solutions as per their demands.

Its unique SaaS model helps users to save time, cost and money.

Machine	Operator	Work Order ID	Job ID	Job Performance	Job Progress		Output		Rejection	Time (mins)				Job Status	End Customer
					Start Time	End Time	Planned	Actual		Setup	Pred	Downtime	Idle		
CNC_S7_81	Operator 1	WO0405200001	4168	58%	10:30 AM		55	41	0	80	215	0	45	In Progress	i
CNC_S7_81	Operator 1	WO0405200001	4168	58%	10:30 AM		55	41	0	80	215	0	45	In Progress	i

iii. LoRaWAN based Solution

UCT is one of the early adopters of LoRAWAN teschnology and providing solution in Agritech, Smart cities, Industrial Monitoring, Smart Street Light, Smart Water/ Gas/ Electricity metering solutions etc.

iv. Predictive Maintenance

UCT is providing Industrial Machine health monitoring and Predictive maintenance solution leveraging Embedded system, Industrial IoT and Machine Learning Technologies by finding Remaining useful life time of various Machines used in production process.

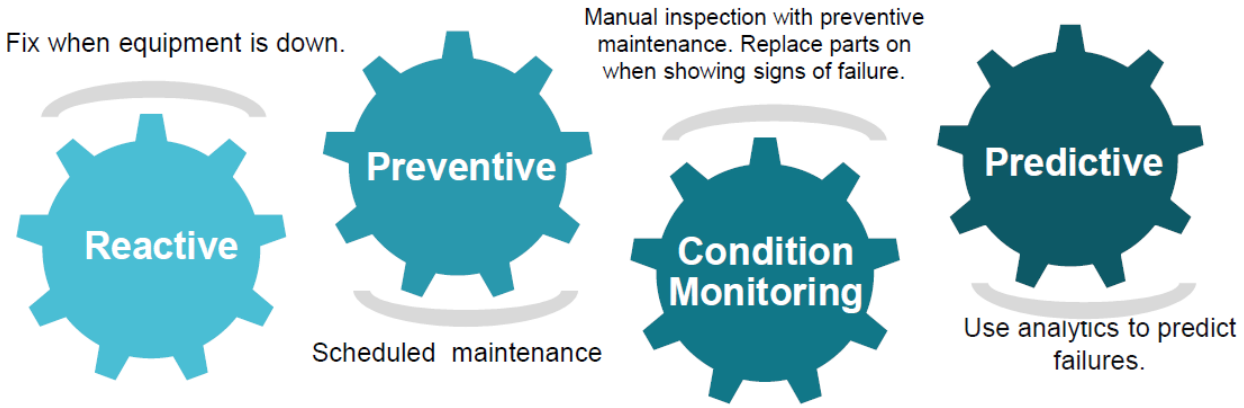

2.2 About upskill Campus (USC)

upskill Campus along with The IoT Academy and in association with Uniconverge technologies has facilitated the smooth execution of the complete internship process.

USC is a career development platform that delivers **personalized executive coaching** in a more affordable, scalable and measurable way.

Seeing need of upskilling in self paced manner along-with additional support services e.g. Internship, projects, interaction with Industry experts, Career growth Services

upSkill Campus aiming to upskill 1 million learners in next 5 year

https://www.upskillcampus.com/

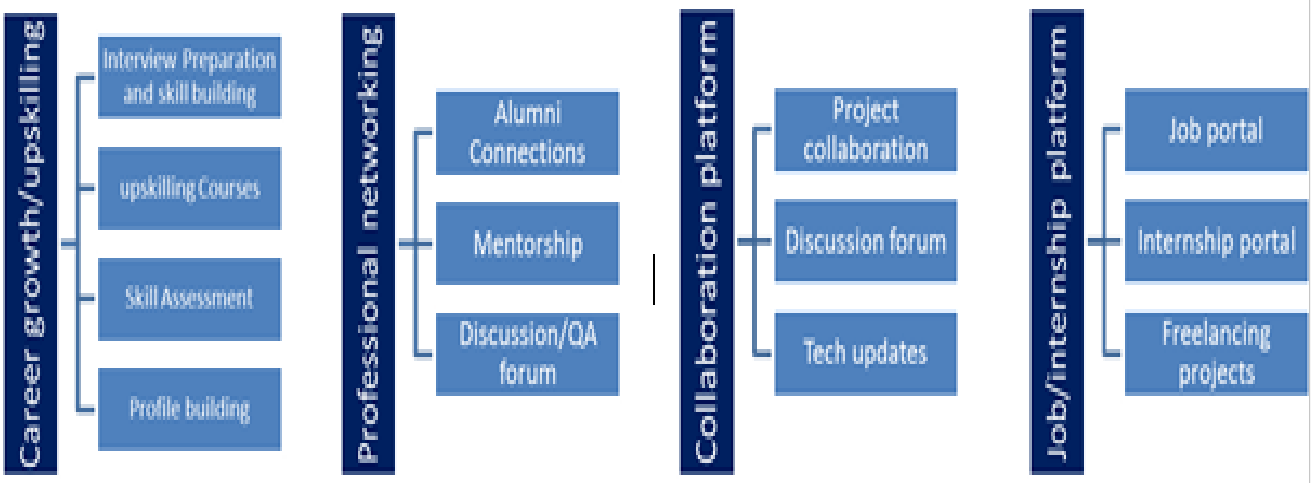

2.3 The IoT Academy

The IoT academy is EdTech Division of UCT that is running long executive certification programs in collaboration with EICT Academy, IITK, IITR and IITG in multiple domains.

2.4 Objectives of this Internship program

The objective for this internship program was to

- ☛ To understand industrial project development methodology.
- ☛ To gain practical exposure in embedded systems and IoT applications.
- ☛ To develop an IV Drip Monitoring System for healthcare monitoring applications.
- ☛ To study component interfacing using ESP32.
- ☛ To implement alert indication through LED and buzzer.
- ☛ To improve technical documentation and reporting skills.

2.5 Reference

[1] ESP32 documentation and Arduino embedded programming references

[2] Wokwi simulation platform references

[3] Learning resources provided during internship modules

2.6 Glossary

Terms	Acronym
Microcontroller	MCU
Intravenous	IV
Light Emitting Diode	LED
Embedded System	ES
Internet of Things	IoT

3 Problem Statement

In hospitals and healthcare environments, intravenous (IV) fluid administration is one of the most common treatment procedures used for delivering saline, medicines, and nutrients directly into a patient's body. During this process, continuous observation of the IV bottle or fluid level is necessary to ensure that the fluid is delivered safely and does not become empty without notice. If the IV bottle becomes empty and is not identified at the correct time, it may interrupt treatment and create inconvenience for both the patient and healthcare staff.

In many hospitals, IV monitoring is still performed manually by nurses or healthcare personnel. Manual monitoring requires repeated checking of IV bottles, especially when multiple patients are under treatment at the same time. This increases workload and creates difficulty in identifying low fluid conditions immediately. In busy healthcare environments, continuous manual observation may not always be possible, which can delay attention to patients requiring immediate IV replacement.

Apart from fluid monitoring, maintaining patient-related information during treatment is also important. Patient details such as name, IV medicine, fluid quantity, and monitoring status are often recorded separately. Combining monitoring status with patient information can improve treatment management and help in better observation of individual patient conditions.

To reduce manual dependency and improve monitoring support, an automated IoT-based IV Drip Monitoring System is proposed. The project is designed to identify IV-related conditions using embedded monitoring logic and generate physical alert indications when the fluid reaches a critical stage. The system uses ESP32 as the main controller and provides alert outputs through LED and buzzer so that healthcare staff can recognize the warning condition immediately.

In addition to physical indication, the system also considers patient detail handling and monitoring data storage through connected logic. This allows the project to represent a basic IoT model where monitoring information can be associated with patient details for better healthcare support. Simulation-based development was used to verify system behavior, output response, and monitoring sequence.

The main purpose of this project is to demonstrate how embedded systems and IoT concepts can be applied in healthcare monitoring applications to improve awareness, reduce manual workload, and support timely intervention during IV treatment.

4 Existing and Proposed solution

In many healthcare environments, IV fluid monitoring is performed manually by nurses or hospital staff. During treatment, repeated checking of IV bottles is required to ensure that the fluid does not become empty during administration. This method depends heavily on continuous human attention and becomes difficult when multiple patients require monitoring at the same time.

Manual monitoring does not provide automatic indication when the fluid reaches a critical level. Delay in identifying low IV fluid may interrupt treatment and increase workload. Patient details and IV-related information are also often maintained separately, making the process less integrated.

The proposed solution in this project is an IoT-based IV Drip Monitoring System developed using ESP32 as the main controller. The system monitors IV-related conditions through programmed logic and generates alert outputs when the fluid reaches a threshold condition. LED and buzzer are used as physical indicators to provide immediate warning near the patient location.

The model also considers patient detail handling and monitoring data storage, where information such as patient name, IV medicine details, fluid quantity, and monitoring status can be associated with the monitoring output. Simulation was used to verify system behavior, output response, and monitoring sequence.

This proposed solution improves monitoring awareness, reduces dependency on continuous manual observation, and demonstrates how embedded systems and IoT concepts can support healthcare applications.

4.1 Code submission - https://github.com/Hindujashri/upskillCampus

4.2 Report submission - https://github.com/Hindujashri/upskillCampus

5 Proposed Design/ Model

The proposed IV Drip Monitoring System follows a structured design flow beginning with monitoring input, controller processing, alert generation, and data handling.

The first stage of the system starts with detecting IV-related conditions through the flow sensor, where the monitoring input represents the fluid movement status. This input is provided to ESP32, which acts as the main controller of the system.

In the intermediate stage, ESP32 processes the received input continuously according to the programmed monitoring logic. The controller compares the monitoring condition with the defined threshold values to identify whether the IV flow remains normal or reaches a critical stage.

When the monitored condition reaches the defined threshold, the final stage of the system activates physical alert outputs. LED provides visual indication and buzzer generates audio alert so that immediate attention can be given near the patient location.

At the same time, patient-related information such as patient name, age, date, time, IV medicine name, and dosage quantity is associated with the monitoring output and stored through cloud-based logic for healthcare observation. Simulation was used to verify each stage of the design flow, output sequence, and overall system performance.

5.1 High Level Diagram

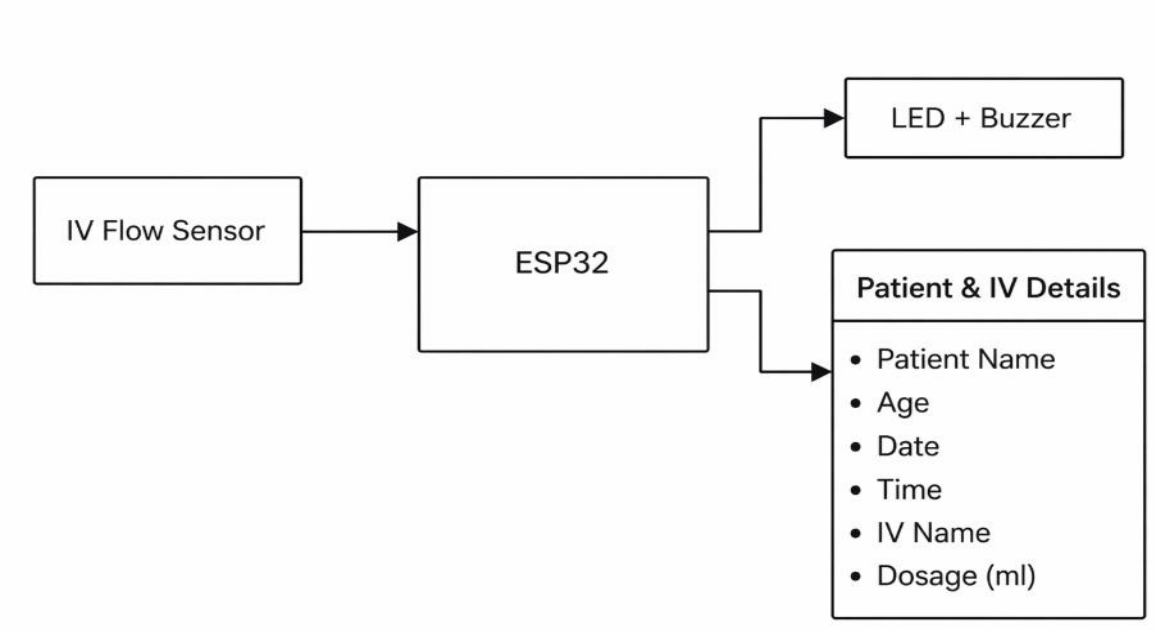

Figure 1: HIGH LEVEL DIAGRAM OF THE SYSTEM

The high level diagram shows the overall functional flow of the proposed IV Drip Monitoring System. The IV flow sensor sends monitoring data to ESP32, which generates physical alerts through LED and buzzer and supports cloud-based storage of patient and IV details.

5.2 Low Level Diagram

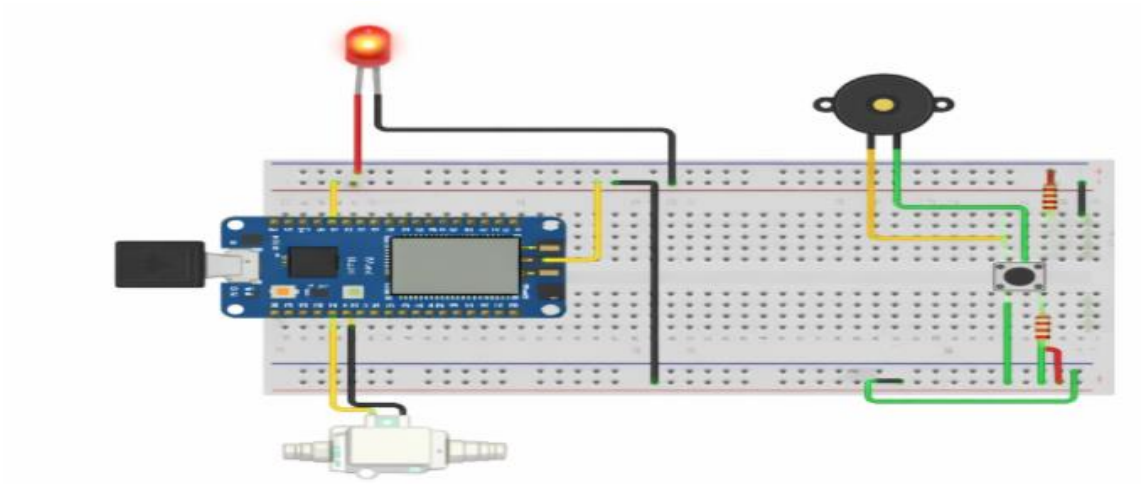

Figure 2: Low Level Diagram of IV Drip Monitoring System

The low level diagram shows the detailed hardware connectivity of ESP32 with the flow sensor, LED, buzzer, and input components used for monitoring and alert generation.

5.3 Interfaces

The proposed IV Drip Monitoring System uses ESP32 as the central interfacing controller to connect sensing, alert generation, and data handling functions. The flow sensor provides input related to IV fluid movement, which is continuously processed by ESP32 through programmed monitoring logic.

When the monitored flow reaches a critical condition, ESP32 generates output signals to the buzzer and LED for immediate physical alert indication. The LED provides visual indication, while the buzzer gives sound alert for nearby healthcare attention.

In addition to local alert generation, the system also supports patient data handling through connected cloud-based logic. Patient details such as patient name, age, date, time, IV medicine name, and dosage quantity are associated with the monitoring output for recording and observation. The interface structure combines sensing, controller processing, output indication, and cloud data flow within one monitoring system, making the project suitable for IoT-based healthcare monitoring applications.

6 Performance Test

Performance testing was carried out to evaluate the proposed IV Drip Monitoring System under simulated monitoring conditions and to identify important design constraints affecting system reliability. A major constraint in this project is monitoring accuracy, since the system must correctly identify IV flow conditions and generate alert output at the required stage. Repeated simulation testing was performed to verify controller response. Output synchronization was also considered, where LED and buzzer must activate together during critical conditions. Simple timing control was used to ensure stable coordination. Memory and processing capability were maintained within ESP32 limits by keeping the monitoring logic simple for smooth operation and patient data handling. The test results showed that LED and buzzer responded correctly when threshold conditions were reached, and the controller maintained stable operation during repeated testing. This evaluation shows that the system is suitable for basic healthcare monitoring applications.

6.1 Test Plan/ Test Cases

• Verify monitoring input to ESP32

• Check LED and buzzer alert response

• Test repeated monitoring cycles

• Observe patient data handling logic

6.2 Test Procedure

The system was tested through simulation by applying monitoring input and observing controller response. LED and buzzer activation were checked under threshold conditions to verify output coordination.

6.3 Performance Outcome

The simulation results showed that ESP32 processed monitoring input correctly and generated alert outputs without major delay. LED and buzzer responded properly when critical monitoring conditions were reached. Repeated testing confirmed stable output response and proper alert sequence. The system demonstrated that the proposed design can support basic IV monitoring applications with physical alert indication and data handling capability using Google sheet.

7 My learnings

This internship provided valuable practical exposure to embedded systems, IoT concepts, and healthcare monitoring applications through the development of the IV Drip Monitoring System. A major learning during this internship was understanding the role of ESP32 in processing monitoring input and controlling output devices such as LED and buzzer through embedded programming logic.

The project improved practical knowledge in circuit understanding, component interfacing, monitoring logic development, and simulation-based testing. Repeated testing also strengthened debugging ability and output coordination skills. Patient data handling as part of the system improved understanding of healthcare monitoring requirements and how technical systems can support medical applications.

Weekly learning modules also provided better practical understanding of IoT architecture, embedded systems, circuit design, cloud-based data handling concepts, and technical deployment challenges. The internship also improved confidence in analyzing system flow, understanding technical documentation, and presenting project work in a structured manner.

It helped in developing a clearer understanding of how industrial projects are planned step by step, from identifying the problem statement to designing, testing, and documenting the final solution. The experience also strengthened interest in applying Medical Electronics knowledge to practical healthcare systems and improved readiness for future technical projects. Overall, this internship improved technical knowledge, report writing ability, problem-solving skills, practical thinking, and it will support future academic projects and career growth in technical domains.

8 Future work scope

The IV Drip Monitoring System can be further improved by enhancing its monitoring capability and expanding healthcare support features. Future development may include the use of more accurate sensing techniques to improve IV fluid level detection and drip flow monitoring, thereby increasing system reliability.

Cloud-based data handling can be extended to provide better monitoring history analysis and easier access to patient records for healthcare staff. Integration of mobile notifications and display systems can further improve response time and monitoring visibility during patient care.

In addition, the monitoring logic can be upgraded to detect abnormal drip rates, blockage conditions, and multiple warning stages for safer operation. Overall, the project has strong potential to be developed into a more advanced IoT-based healthcare monitoring system for practical hospital applications.