SOC

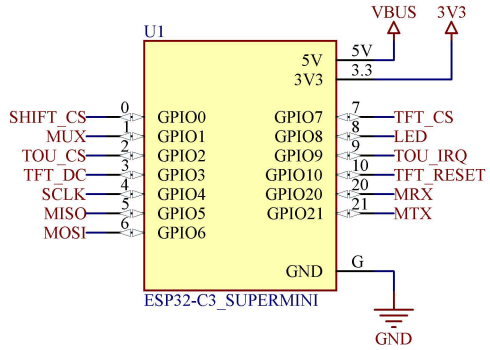

Shift Register

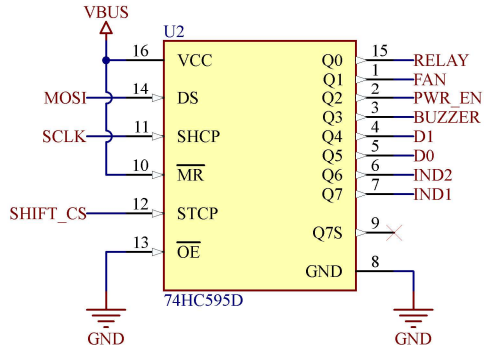

Analog Multiplexer

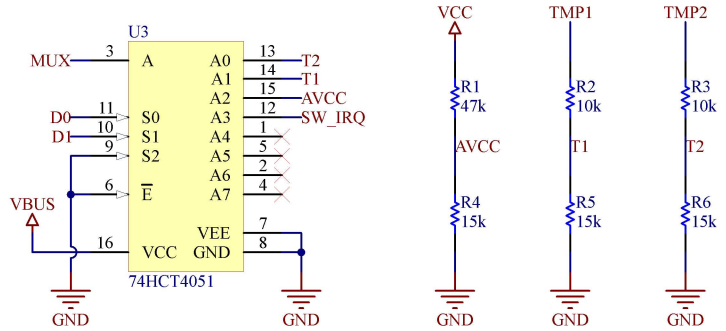

Power Connector & Regulator

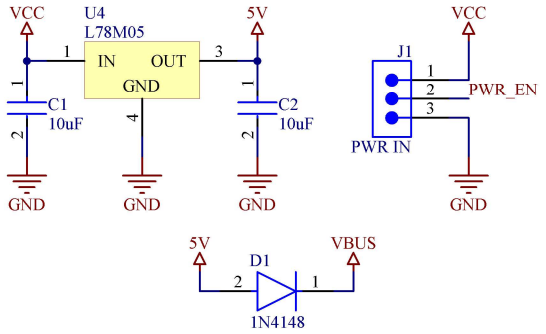

Logic Level Converter

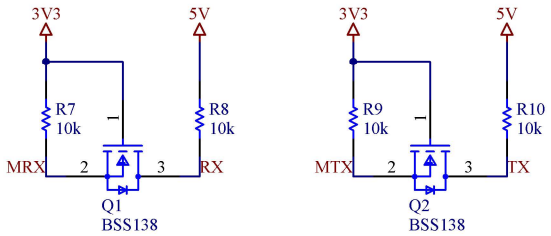

IO Connectors

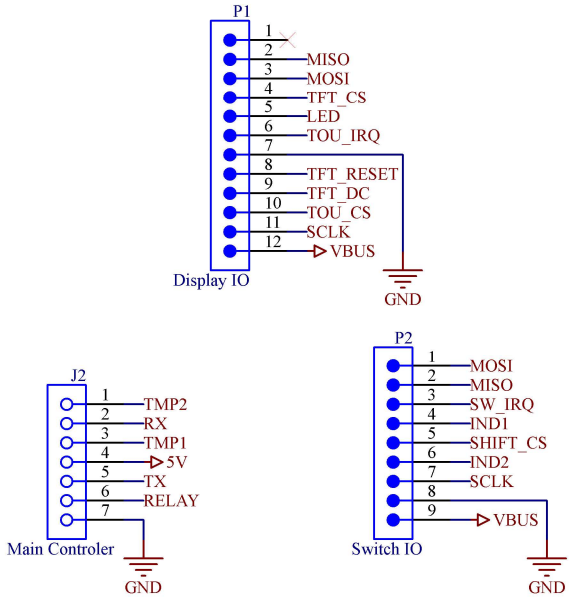

Output Enables

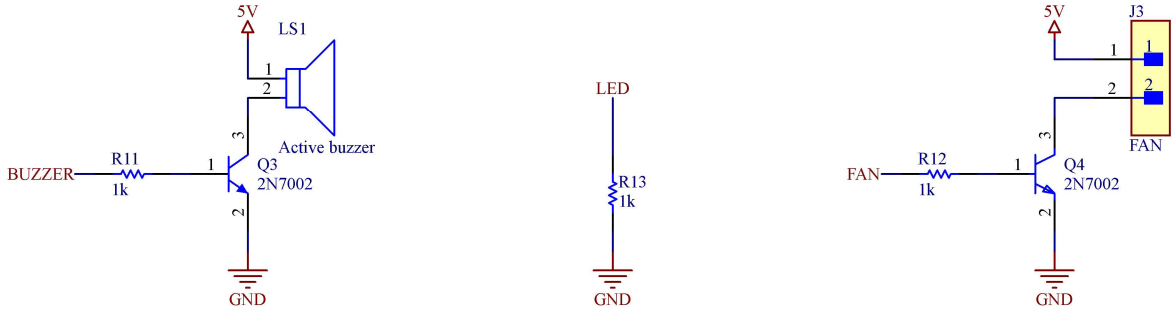

Sheet Title : Primary_Controler			
Project Title : Primary_Controler.PrjPcb			
Author: Hiranya Keshan		**Date** : 14/12/2025	
Size : A4		**Version :** V1	
File : Sheet1.SchDoc		**Sheet** : 1 **Of** 1	