Isolated Push Pull Converter

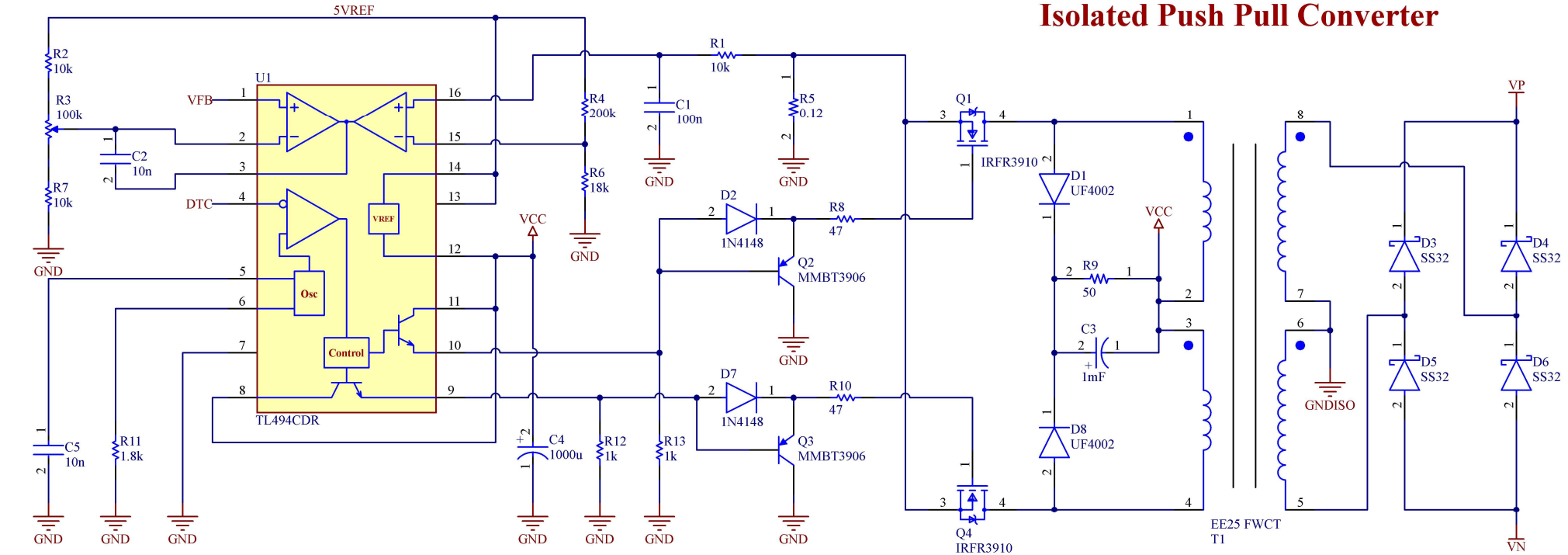

Feedback

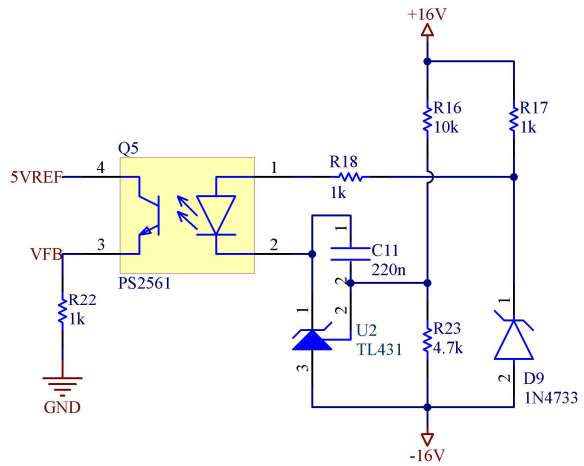

Driver Enable

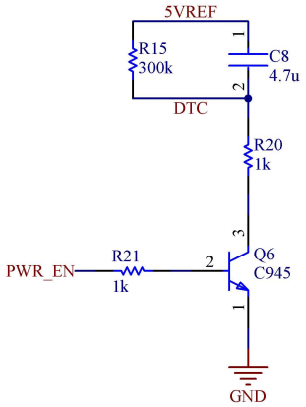

Connectors

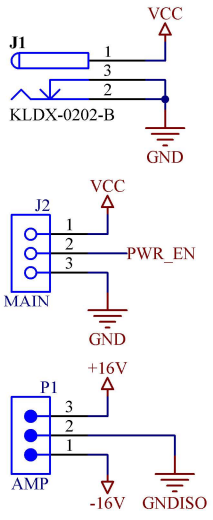

Output Filter

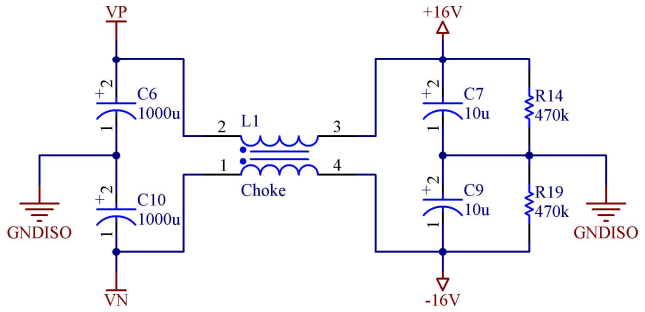

Sheet Title : Isolated DC DC Converter	
Project Title : Power _Supply.PrjPcb	
Author: Hiranya Keshan	**Date :** 28/12/2025
Size : A4	**Version :** V1
File : Sheet1.SchDoc	**Sheet :** 1 **Of** 1