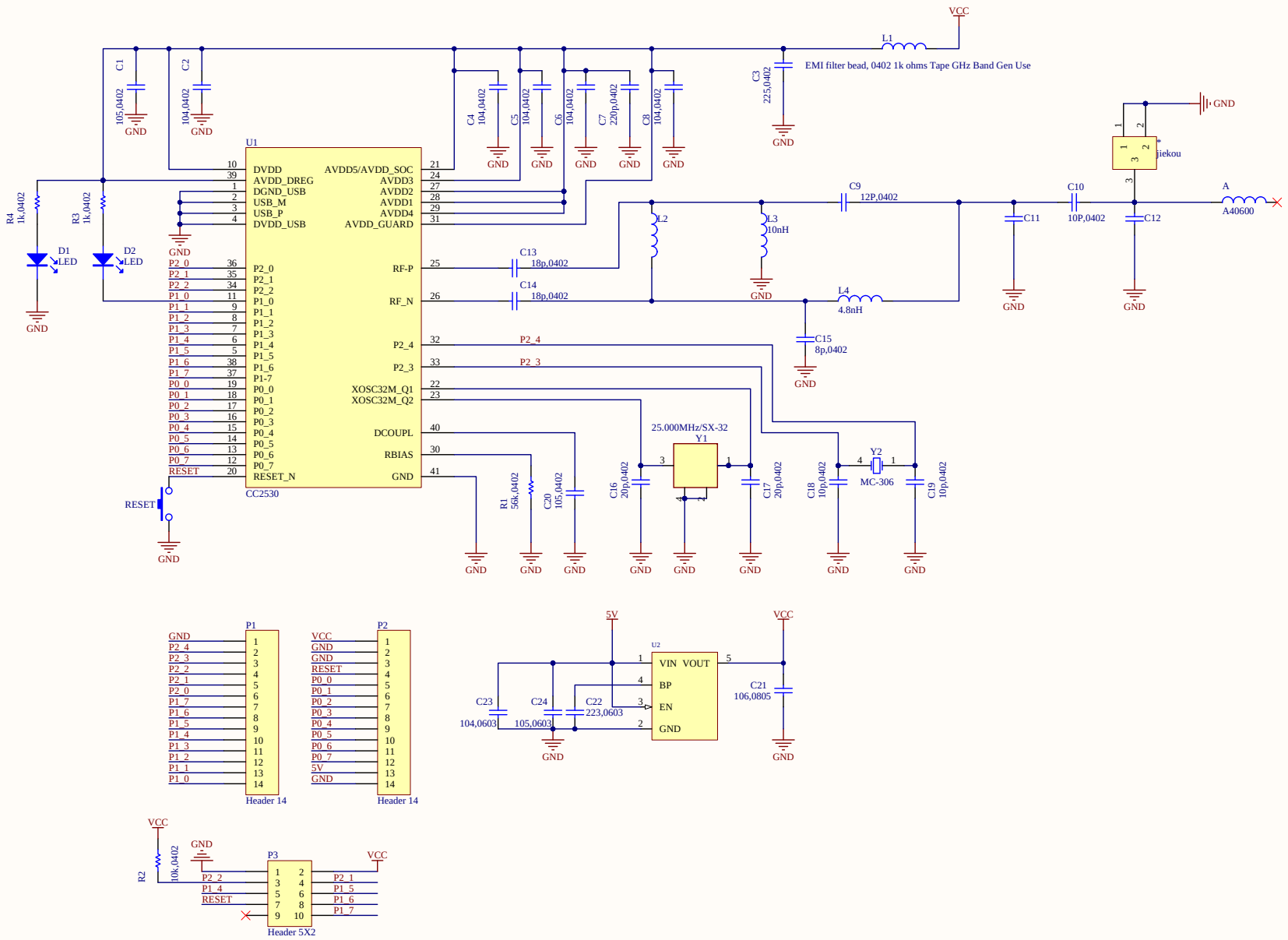

Title	CC2530普通版原理图	
Size A3	Number	Revision V1.1
Date: 2015-01-22		Sheet of
File: X:\项目\CC2530\CC2530.SchDoc		Drawn By: