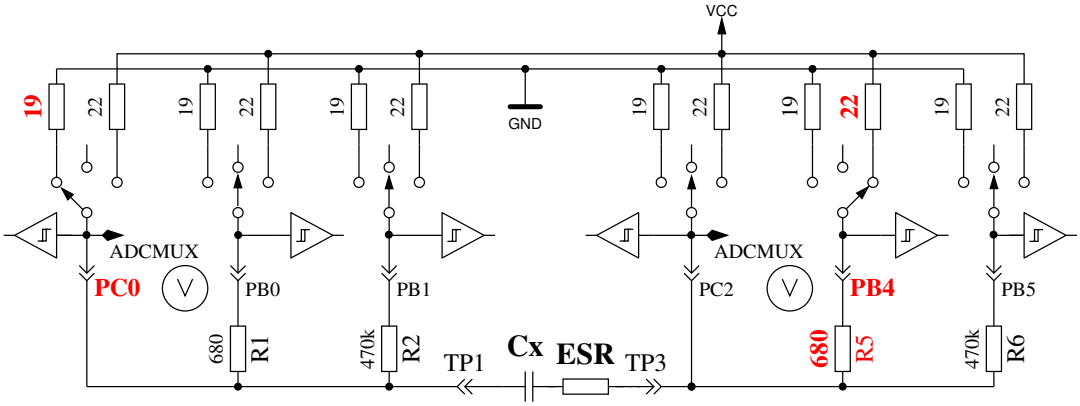

Voltage measurement with charge current

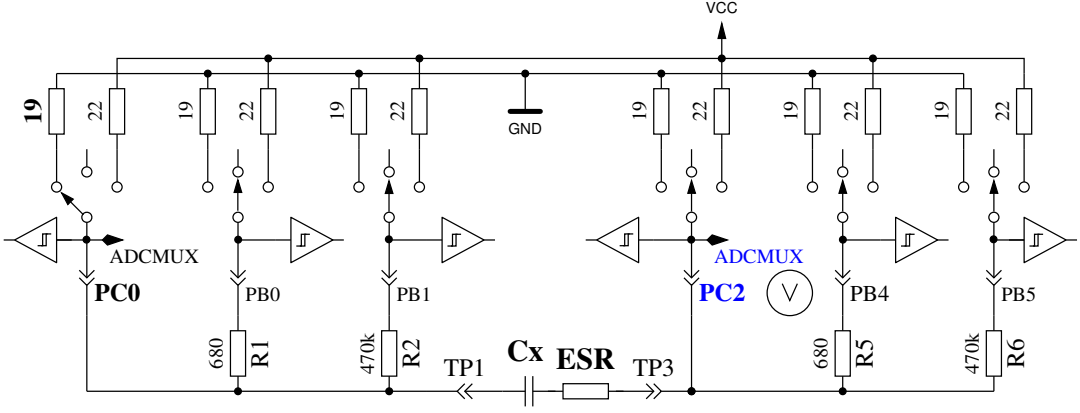

Voltage measurement without current