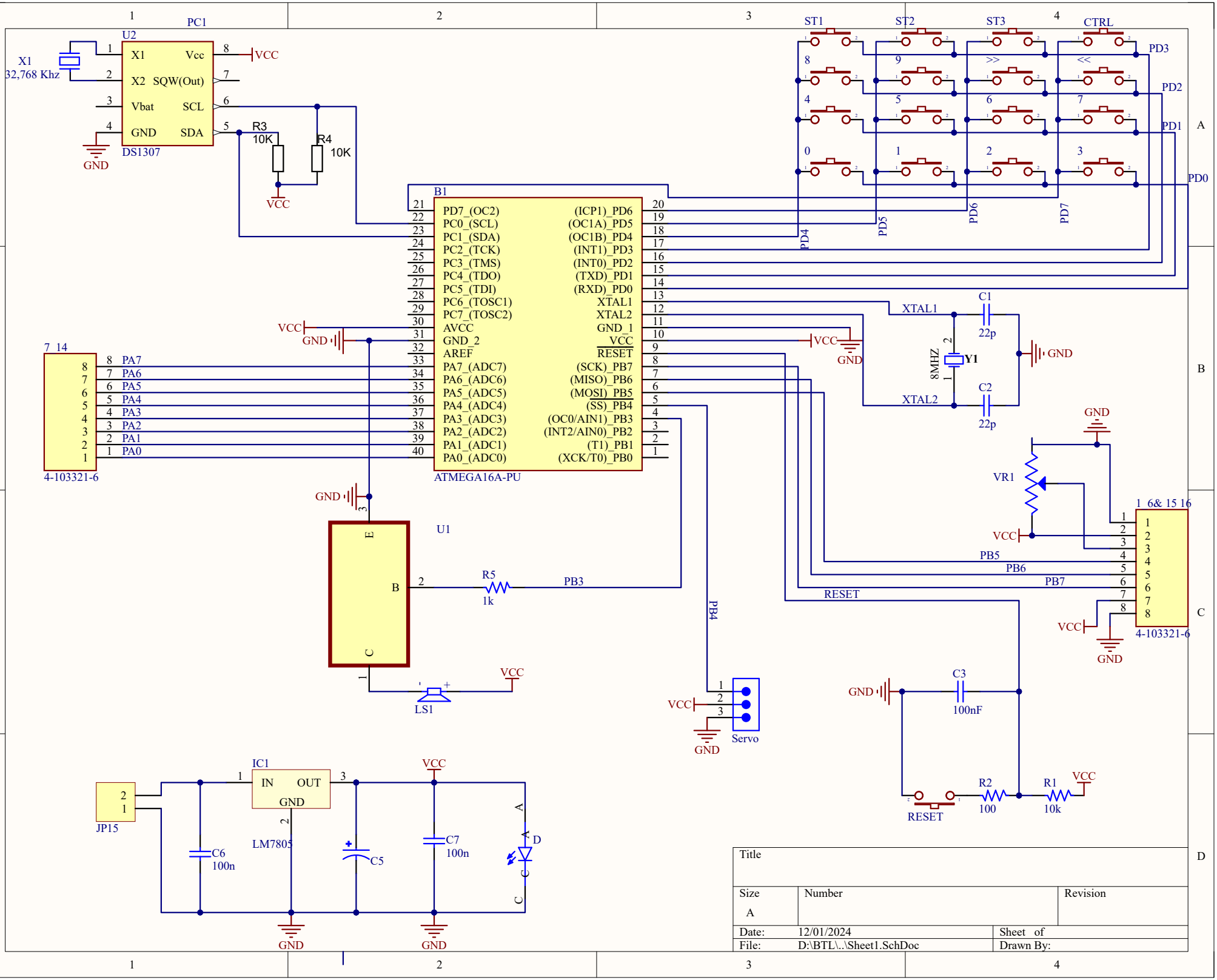

Title		
Size A	Number	Revision
Date: 12/01/2024		Sheet of
File: D:\BTL\..\Sheet1.SchDoc		Drawn By: