PDF-XChange Co. Ltd.
Click to buy NOW!
www.pdf-xchange.com

# Input

## Half bridge rectifier

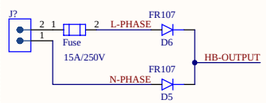


## Zero-crossing detection

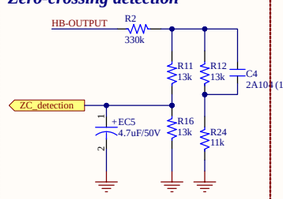


# Voltage Rails

## +18V / +9V

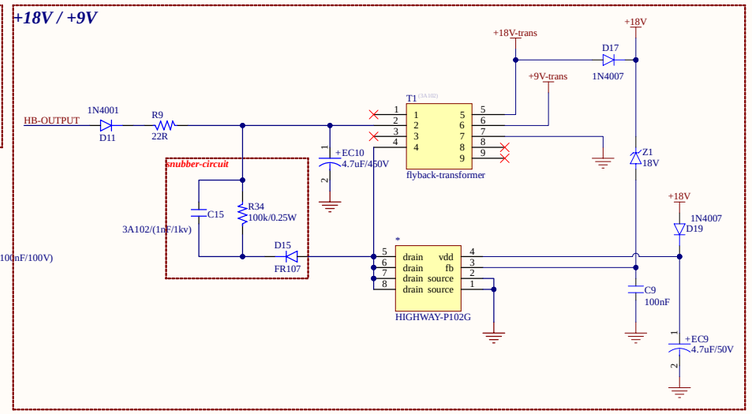


## +5V

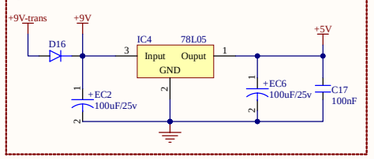


# Gate driver

1. The Turn-Off Process
2. The Objective of D8 (1N4148)

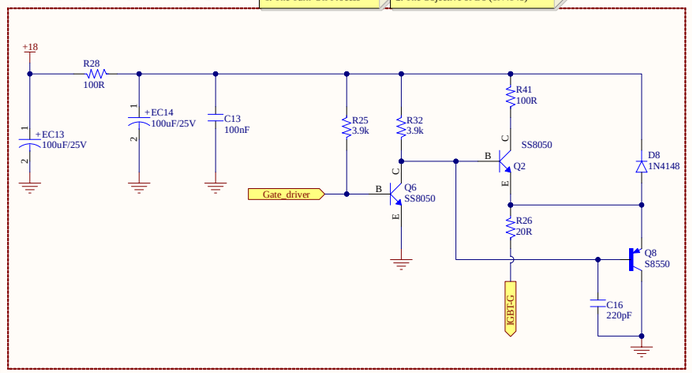


# Aux

## Fan & Buzzer

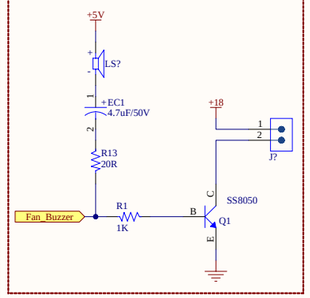


## Coil Sensor

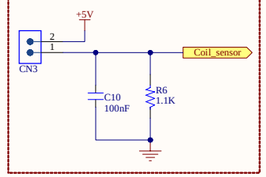


## Control Panel

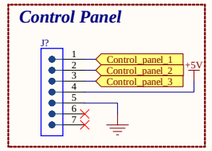


# Microcontroller & Coil Control

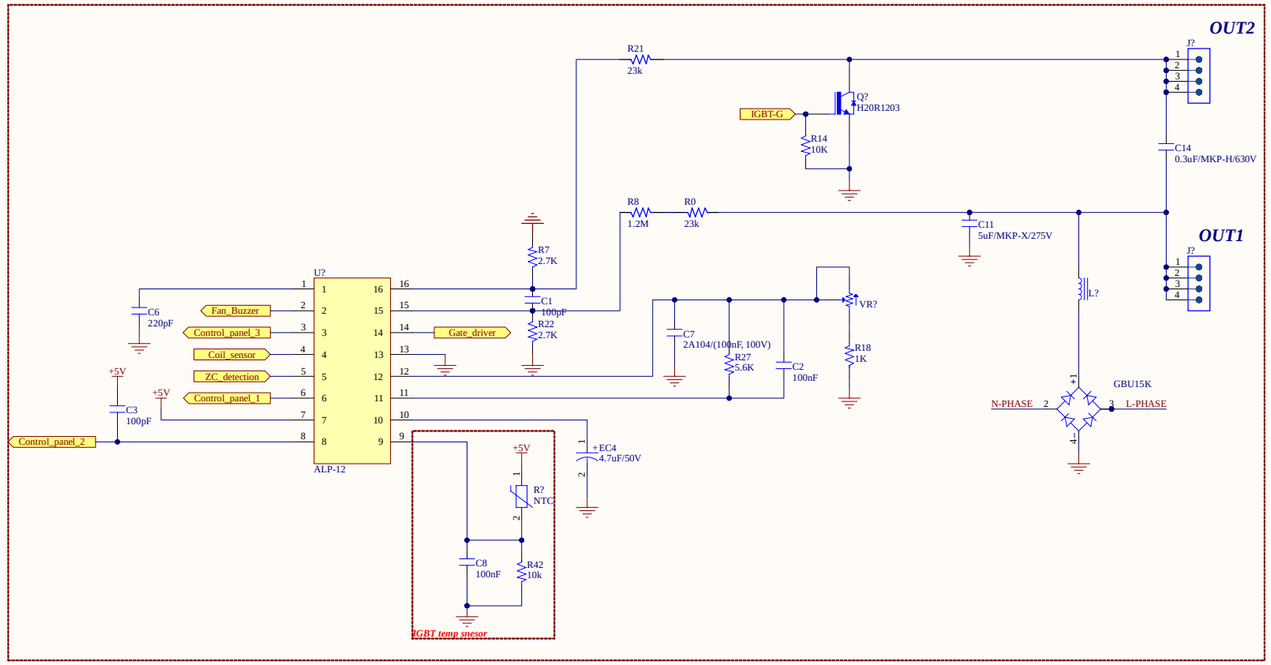


| Title | | |
|---|---|---|
| Size C | Number | Revision |
| Date: 3/14/2026 | Sheet of | |
| File: D:\11_Hobbies\..\Sheet1.SchDoc | Drawn By: | |