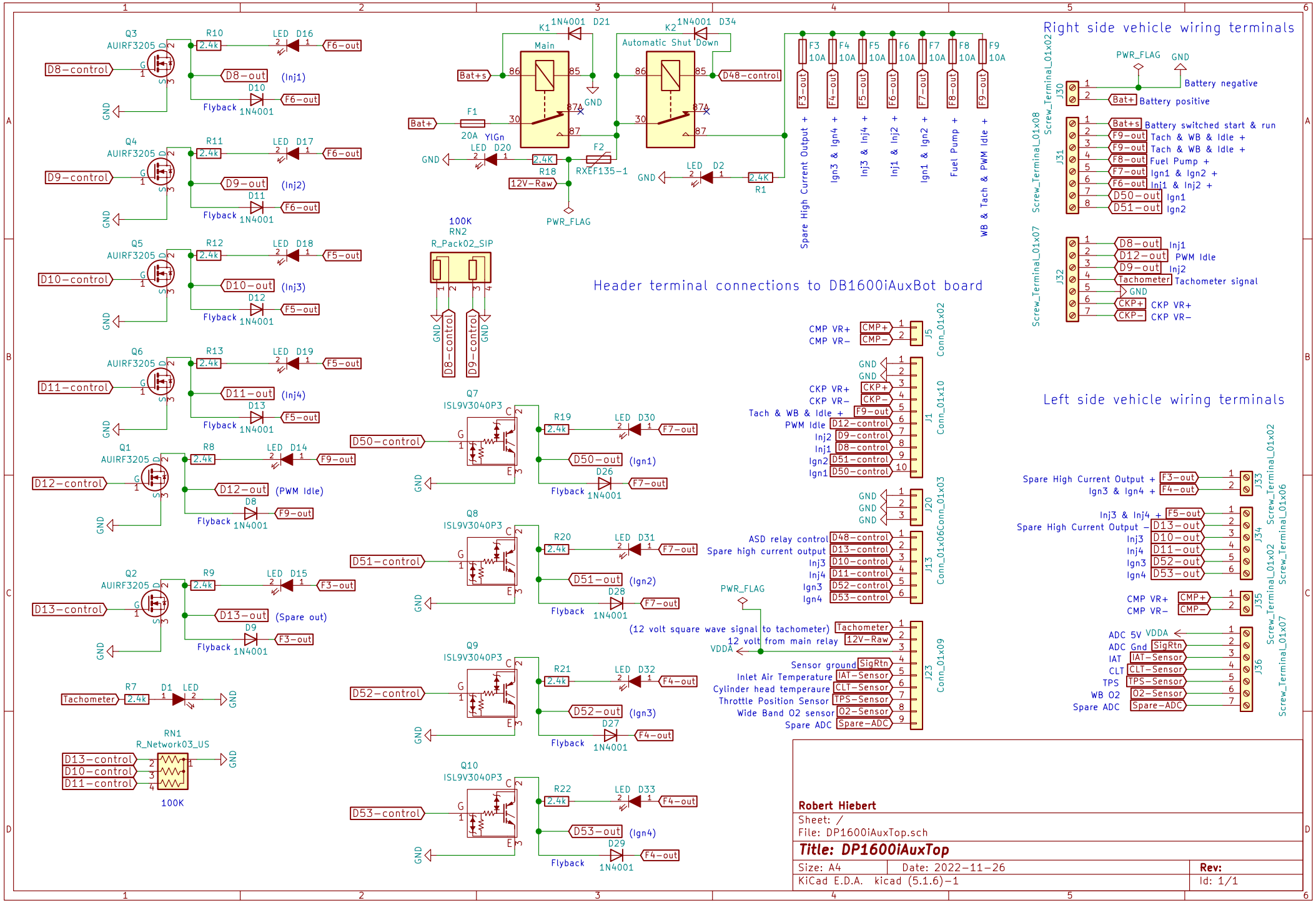
Right side vehicle wiring terminals
Header terminal connections to DB1600iAuxBot board
Left side vehicle wiring terminals
Q3 AUIRF3205
Q4 AUIRF3205
Q5 AUIRF3205
Q6 AUIRF3205
Q1 AUIRF3205
Q2 AUIRF3205
Q7 ISL9V3040P3
Q8 ISL9V3040P3
Q9 ISL9V3040P3
Q10 ISL9V3040P3
K1 1N4001 D21
K2 1N4001 D34
Main
Automatic Shut Down
Bat+s
Bat+
F1 20A YlGn
F2 RXEF135-1
R18 2.4K
R1 2.4K
12V-Raw
PWR_FLAG
RN2 R_Pack02_SIP 100K
RN1 R_Network03_US 100K
R7 2.4k
Tachometer
Spare High Current Output +
Ign3 & Ign4 +
Inj3 & Inj4 +
Inj1 & Inj2 +
Ign1 & Ign2 +
Fuel Pump +
WB & Tach & PWM Idle +
Battery negative
Battery positive
Battery switched start & run
Tach & WB & Idle +
Fuel Pump +
Ign1 & Ign2 +
Inj1 & Inj2 +
Ign1
Ign2
Inj1
PWM Idle
Inj2
Tachometer signal
CKP VR+
CKP VR−
CMP VR+
CMP VR−
ASD relay control
Spare high current output
(12 volt square wave signal to tachometer)
12 volt from main relay
Sensor ground
Inlet Air Temperature
Cylinder head temperaure
Throttle Position Sensor
Wide Band O2 sensor
Spare ADC
ADC 5V VDDA
ADC Gnd
IAT
CLT
TPS
WB O2
Robert Hiebert
Sheet: /
File: DP1600iAuxTop.sch
Title: DP1600iAuxTop
Size: A4
Date: 2022-11-26
Rev:
KiCad E.D.A. kicad (5.1.6)-1
Id: 1/1