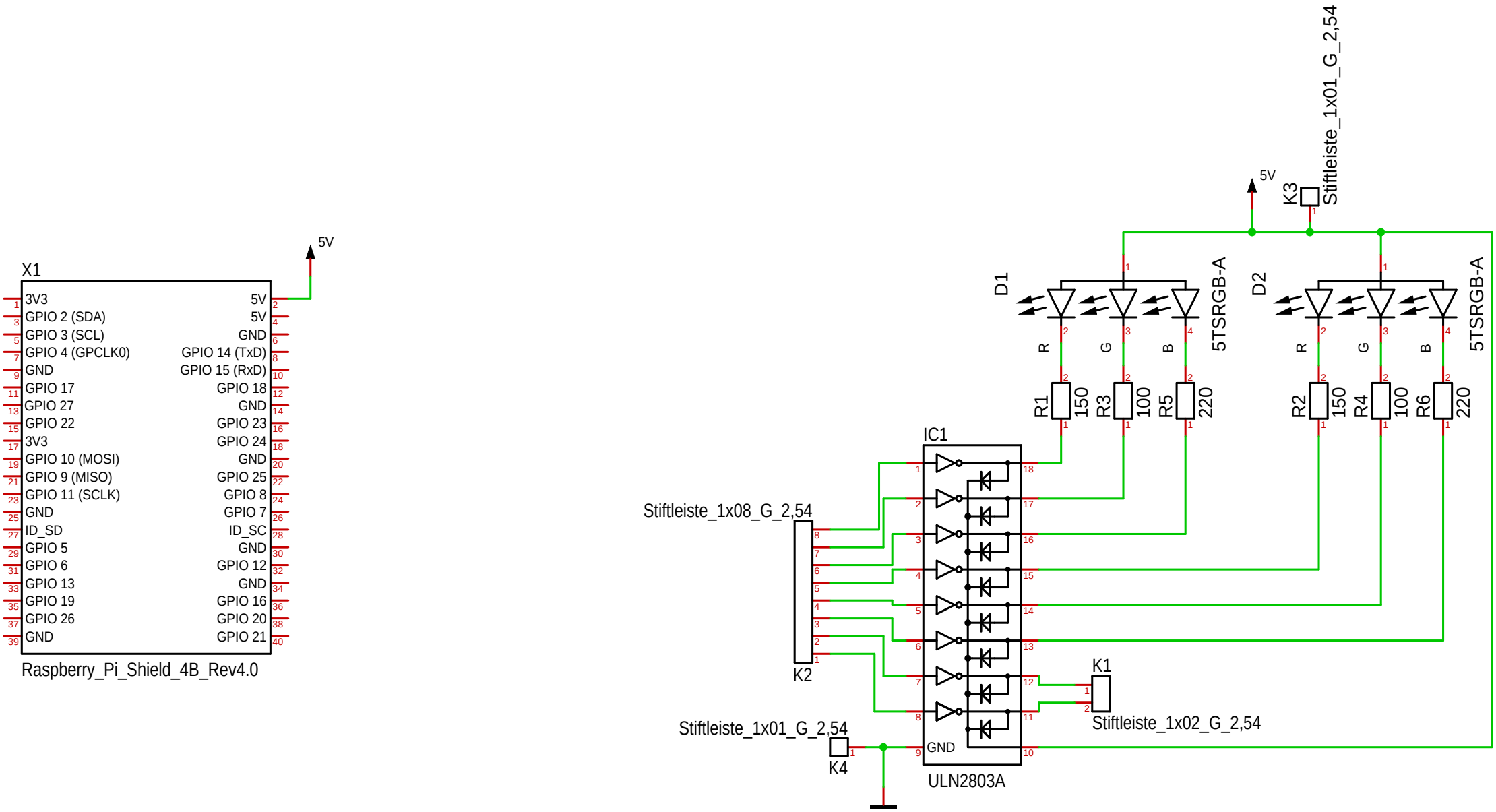
X1
5V
3V3
GPIO 2 (SDA)
GPIO 3 (SCL)
GPIO 4 (GPCLK0)
GND
GPIO 17
GPIO 27
GPIO 22
3V3
GPIO 10 (MOSI)
GPIO 9 (MISO)
GPIO 11 (SCLK)
GND
ID_SD
GPIO 5
GPIO 6
GPIO 13
GPIO 19
GPIO 26
GND
5V
5V
GND
GPIO 14 (TxD)
GPIO 15 (RxD)
GPIO 18
GND
GPIO 23
GPIO 24
GND
GPIO 25
GPIO 8
GPIO 7
ID_SC
GND
GPIO 12
GND
GPIO 16
GPIO 20
GPIO 21
Raspberry_Pi_Shield_4B_Rev4.0
5V
K3
Stiftleiste_1x01_G_2,54
D1
5TSRGB-A
D2
5TSRGB-A
R
G
B
R1 150
R3 100
R5 220
R2 150
R4 100
R6 220
IC1
Stiftleiste_1x08_G_2,54
K2
K1
Stiftleiste_1x02_G_2,54
Stiftleiste_1x01_G_2,54
K4
GND
ULN2803A