CUI Devices is now Same Sky! Learn More

SERIES: TB0011-350 | DESCRIPTION: TERMINAL BLOCK

FEATURES

- 3.5 mm pitch
- UL and CE safety approvals
- 2~12 poles
- horizontal with board

SPECIFICATIONS

parameter	conditions/description	min	typ	max	units
rated voltage (UL)	Use Group: B, D			300	V
rated current (UL)	Use Group: B, D			7	A
rated voltage (IEC)	Overvoltage Category/Pollution Degree: III/2			250	V
rated current (IEC)	Overvoltage Category/Pollution Degree: III/2			10	A
withstanding voltage	for 1 minute		1,250		Vac
surge voltage				2,500	V
contact resistance				20	mΩ
insulation resistance	at 500 Vdc	500			MΩ
operating temperature		-40		105	°C
safety approvals	UL 1059, EN 60998-1:2004, EN 60998-2-1:2004				
flammability rating	UL94V-0				
RoHS	yes				

SOLDERABILITY

parameter	conditions/description	min	typ	max	units
hand soldering	for maximum 10 seconds	345	350	355	°C
wave soldering	for maximum 5 seconds	255	260	265	°C

PART NUMBER KEY

TB0011 - 350 - XX XX

Base Number

No. of Poles:
02 08
03 09
04 10
05 11
06 12
07

Body Color:
BE = blue
GR = green

MECHANICAL DRAWING

units: mm
tolerance:
X≤6.00: ±0.25 mm
6.00<X≤30.00: ±0.40 mm
30.00<X≤60.00: ±0.60 mm
60.00<X≤150.00: ±1.00 mm
X>150.00: ±1.50 mm
unless otherwise noted

DESCRIPTION	MATERIAL	PLATING/COLOR
housing	PA66 (UL94V-0)	see part number key
contacts	copper alloy	tin
screw	steel	zinc
spring	stainless steel	-

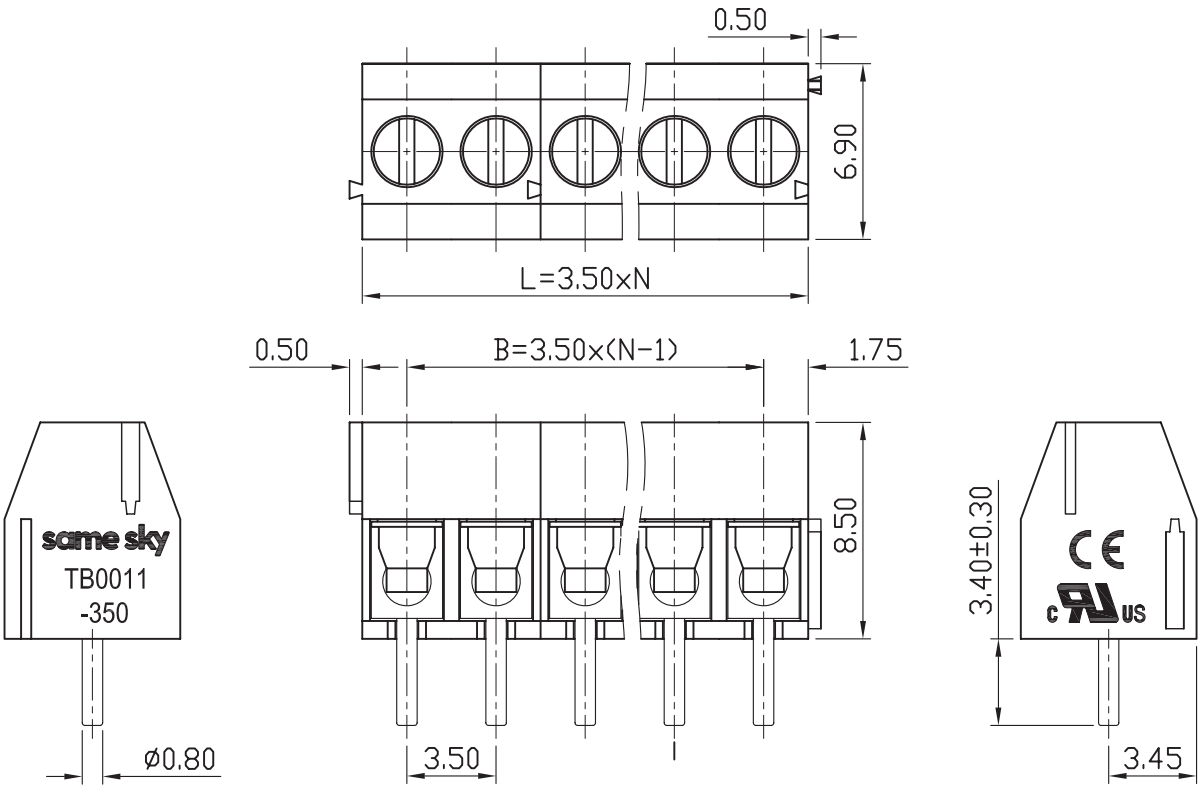

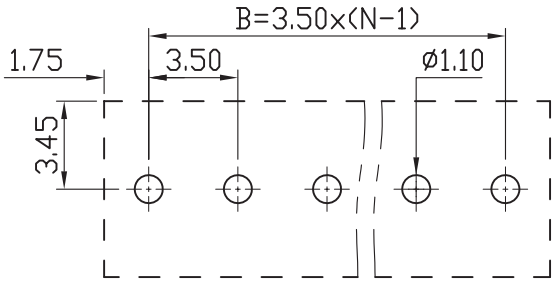

Recommended PCB Layout
Top View

WIRE ASSEMBLY		
	UL	IEC
Wire Range	24~18 AWG	1.0 mm²
Strip Length	5~6 mm	
Screw Size	M2	
Screw Torque	0.2 N-m	

This series can be constructed of 2 and 3 pole modules where L is the total length, P is the pitch, and N is the number of poles.											
N	02	03	04	05	06	07	08	09	10	11	12
L	7.00	10.50	14.00	17.50	21.00	24.50	28.00	31.50	35.00	38.50	42.00
B	3.50	7.00	10.50	14.00	17.50	21.00	24.50	28.00	31.50	35.00	38.50

REVISION HISTORY

rev.	description	date
1.0	initial release	10/02/2025

The revision history provided is for informational purposes only and is believed to be accurate.

Same Sky offers a one (1) year limited warranty. Complete warranty information is listed on our website.

Same Sky reserves the right to make changes to the product at any time without notice. Information provided by Same Sky is believed to be accurate and reliable. However, no responsibility is assumed by Same Sky for its use, nor for any infringements of patents or other rights of third parties which may result from its use.

Same Sky products are not authorized or warranted for use as critical components in equipment that requires an extremely high level of reliability. A critical component is any component of a life support device or system whose failure to perform can be reasonably expected to cause the failure of the life support device or system, or to affect its safety or effectiveness.