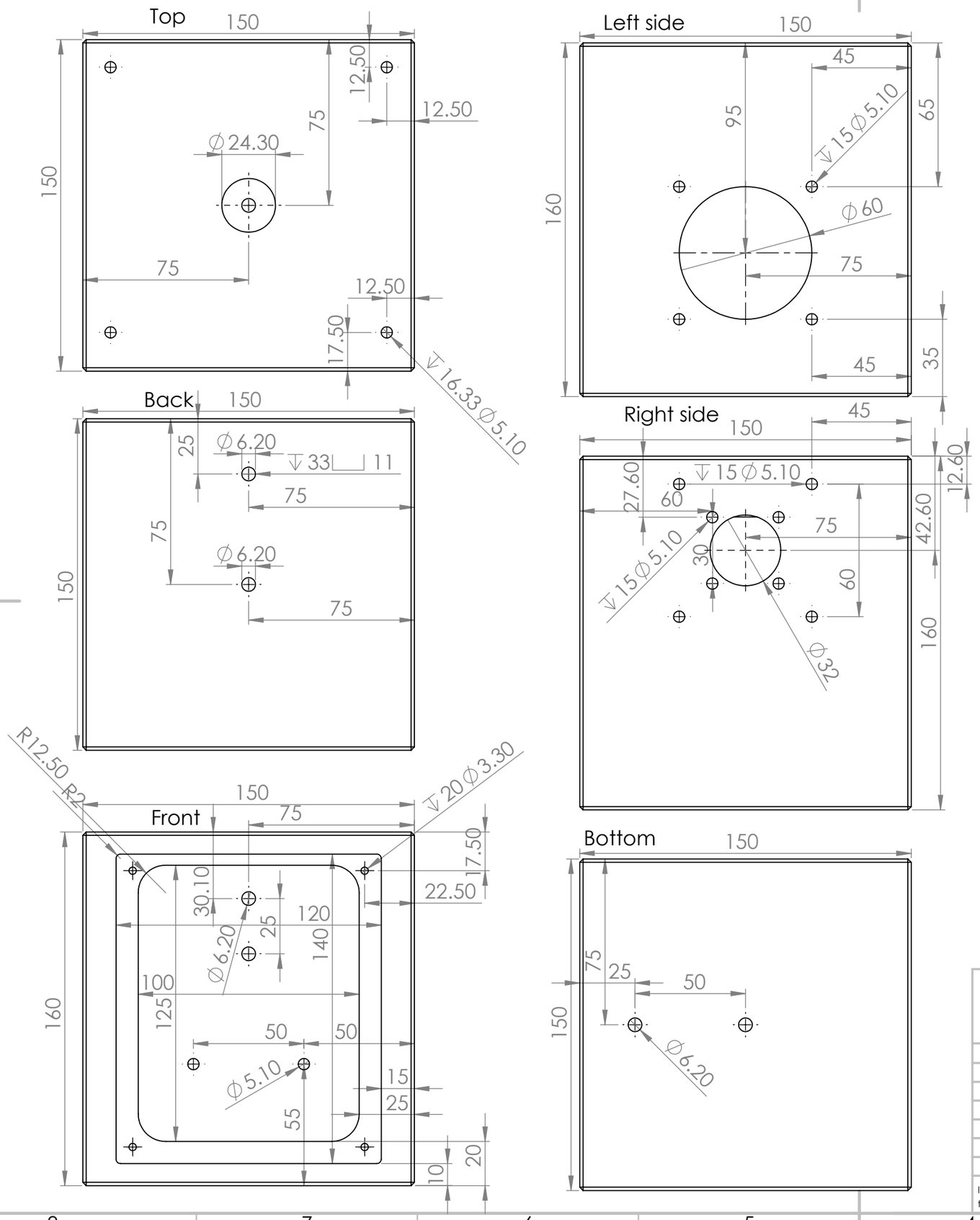

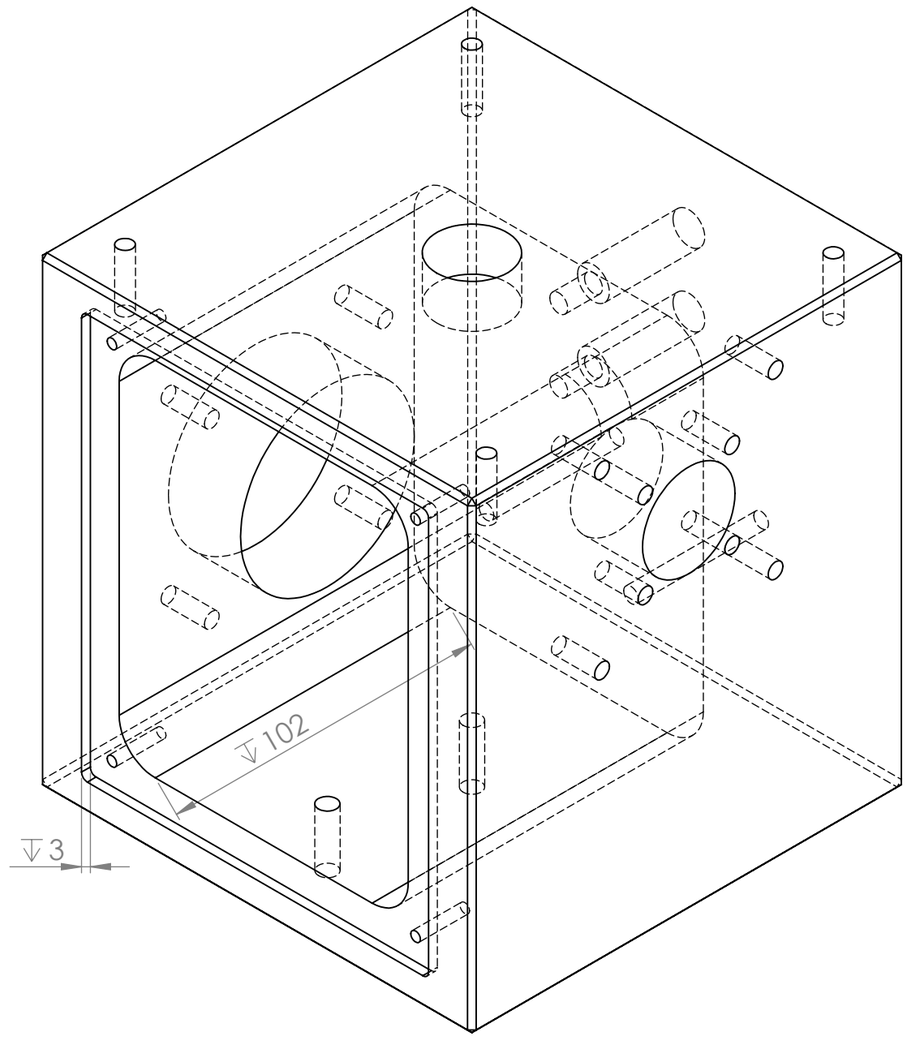

FINISH: Black anodization	DEBURR AND BREAK SHARP EDGES	Confidential	REVISION 1.2
		johannes.hohlbein@wur.nl	

Hole size	Thread
3.30	M4
5.10	M6
6.20	M8
24.30	M25x0.75 (Nikon)

If no depth is stated, hole is a through hole

MATERIAL: Aluminum

WEIGHT:

TITLE: miCube dimensions

DWG NO. Setup_V3

A3

SCALE:1:2

SHEET 1 OF 2

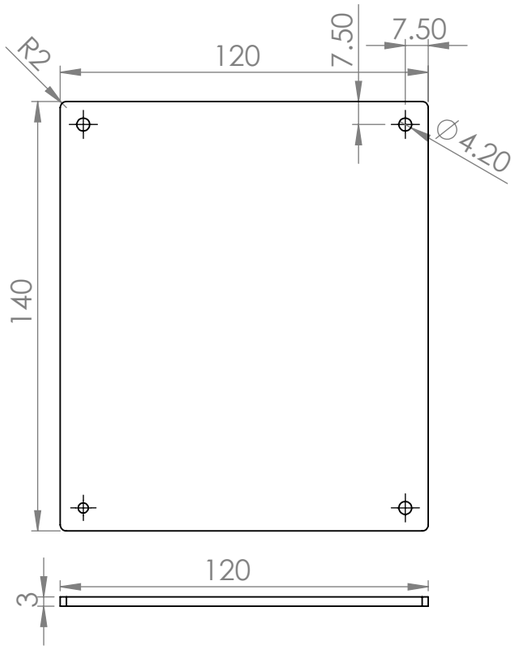

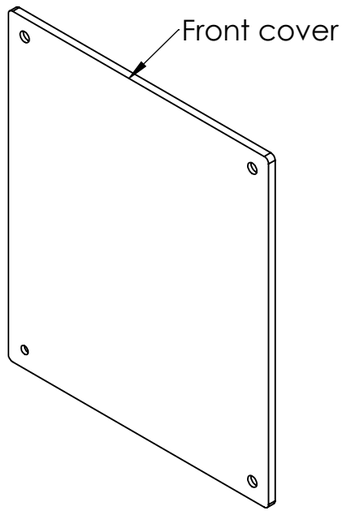

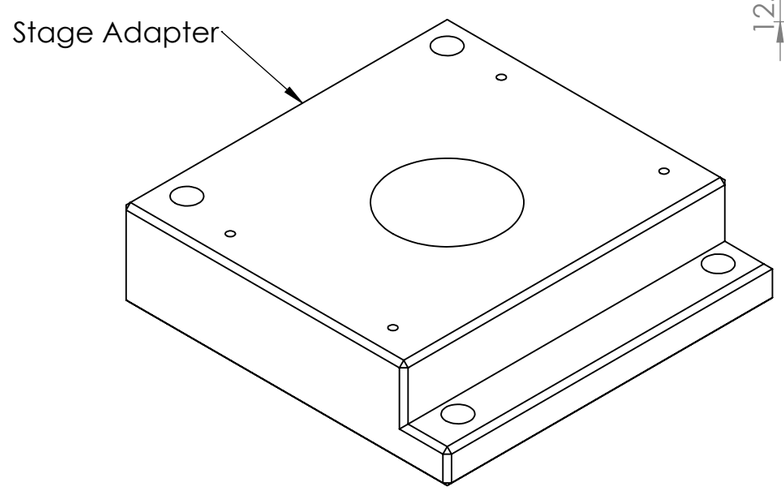

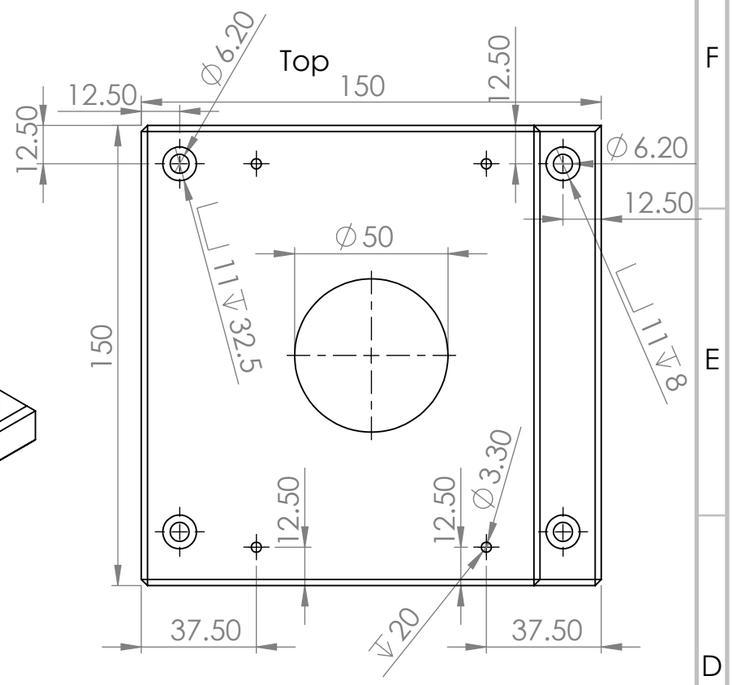

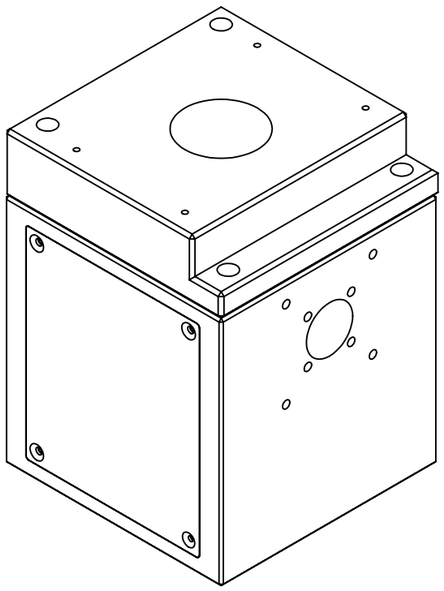

miCube with adapter and cover

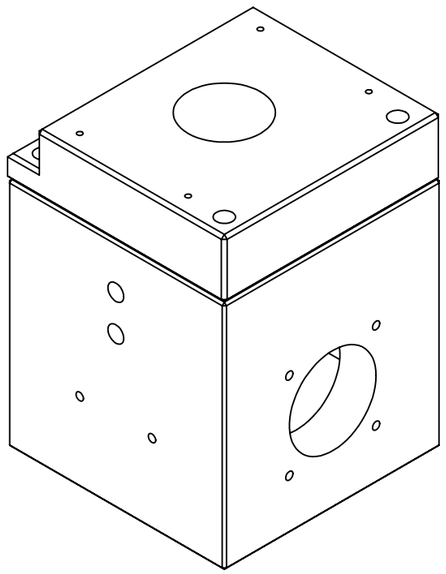

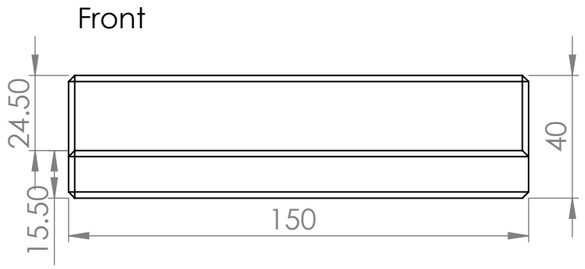

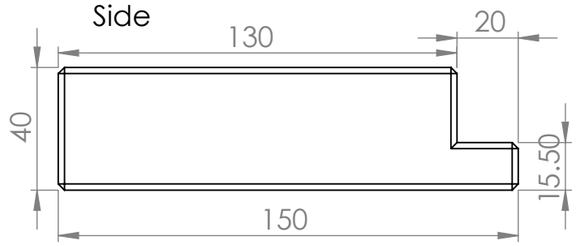

FINISH: Black anodization	DEBURR AND BREAK SHARP EDGES	Confidential	REVISION 1.2
		johannes.hohlbein@wur.nl	

Hole size	Thread
3.30	M4
6.20	M8

If no depth is stated, hole is a through hole

MATERIAL: Aluminum

WEIGHT:

TITLE: miCube auxiliary parts

DWG NO. Setup_V3

A3

SCALE:1:2

SHEET 2 OF 2