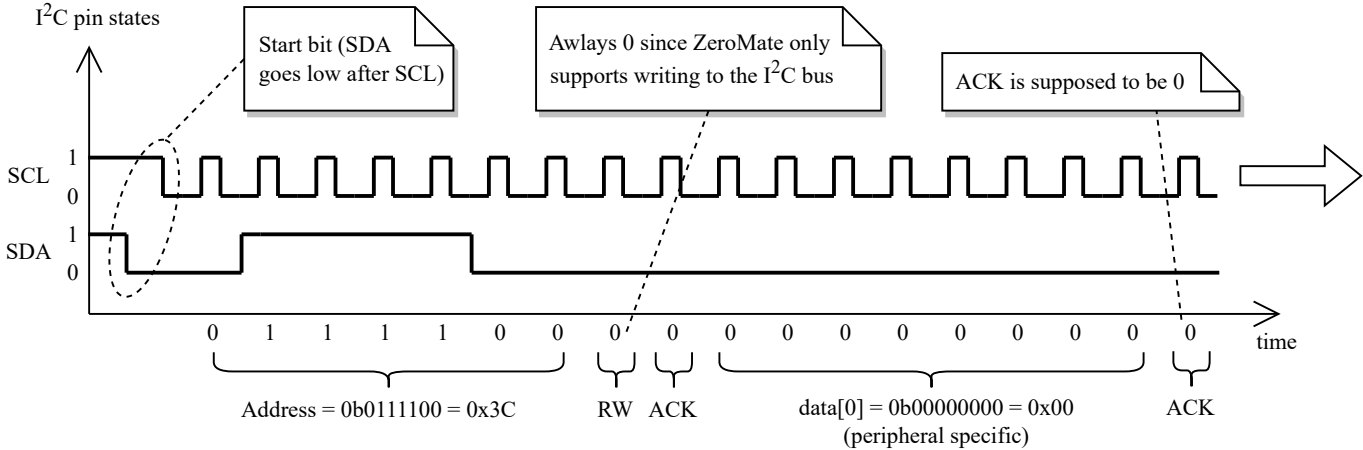
I2C pin states
Start bit (SDA goes low after SCL)
Awlays 0 since ZeroMate only supports writing to the I2C bus
ACK is supposed to be 0
SCL
SDA
1
0
0 1 1 1 1 0 0 0 0 0 0 0 0 0 0 0 0
time
Address = 0b0111100 = 0x3C
RW
ACK
data[0] = 0b00000000 = 0x00
(peripheral specific)
ACK

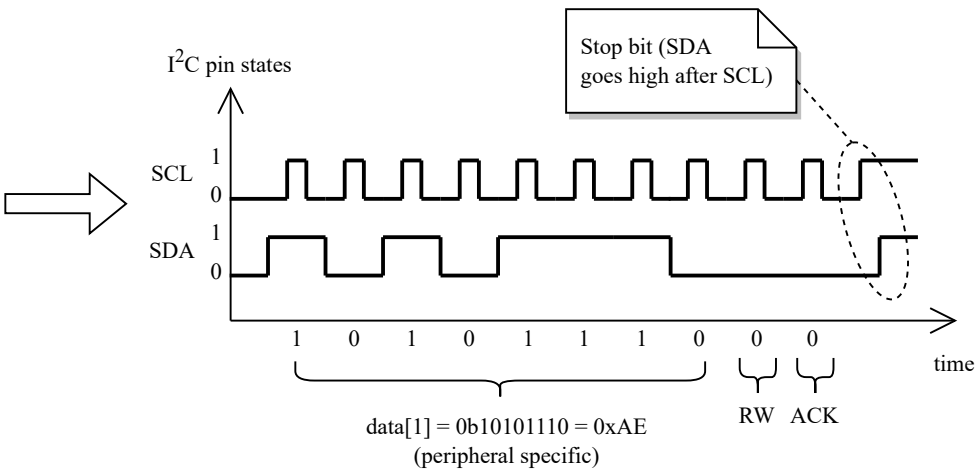
I2C pin states
Stop bit (SDA goes high after SCL)
SCL
SDA
1
0
1 0 1 0 1 1 1 0 0 0
time
data[1] = 0b10101110 = 0xAE
(peripheral specific)
RW
ACK