DRAWING LIST FOR TEST PACKAGE

PAC-509

PROJECT NO.: 22328D

PROJECT TITLE : M15X Ph2 Project

No	PKG No	UNIT	LINE NUMBER			P&ID		REMARK
			ISO DRAWING No	SHEET	REV	P&ID No	REV	
1	509	4FA	OD90-PAC-HP2-N-6513-01	1 OF 2	1	CJ-M15W14-PR-A20-00151	1A	
2	509	4FA	OD50-PAC-HP2-N-6509-01	1 OF 1	1	CJ-M15W14-PR-A20-00151	1A	
3	509	4FA	OD32-PAC-HP2-N-6524-01	1 OF 2	1	CJ-M15W14-PR-A20-00151	1A	
4	509	4FA	OD32-PAC-HP2-N-6524-02	2 OF 2	1	CJ-M15W14-PR-A20-00151	1A	
5	509	4FA	OD50-PAC-HP2-N-6510-01	1 OF 1	1	CJ-M15W14-PR-A20-00151	1A	
6	509	4FA	OD50-PAC-HP2-N-6511-01	1 OF 1	0	CJ-M15W14-PR-A20-00151	1A	
7	509	4FA	OD90-PAC-HP2-N-6513-02	2 OF 2	0	CJ-M15W14-PR-A20-00151	1A	
8	509	5FA	OD90-PAC-HP2-N-6513-01	1 OF 1	0	CJ-M15W14-PR-A20-00151	1A	
9	509	RFA	OD90-PAC-HP2-E-6513-01	1 OF 4	1	CJ-M15W14-PR-A20-00151	1A	
10	509	RFA	OD90-PAC-HP2-E-6513-02	2 OF 4	1	CJ-M15W14-PR-A20-00151	1A	
11	509	RFA	OD32-PAC-HP2-E-6517-01	1 OF 2	1	CJ-M15W14-PR-A20-000105/151	1A	
12	509	RFA	OD32-PAC-HP2-E-6517-02	2 OF 2	1	CJ-M15W14-PR-A20-000105/151	1A	
13	509	RFA	OD32-PAC-HP2-E-6558-01	1 OF 1	1	CJ-M15W14-PR-A20-000105	1A	
14	509	RFA	OD90-PAC-HP2-E-6513-03	3 OF 4	1	CJ-M15W14-PR-A20-00151	1A	
15	509	RFA	OD32-PAC-HP2-E-6516-01	1 OF 2	1	CJ-M15W14-PR-A20-000104/151	1A	
16	509	RFA	OD32-PAC-HP2-E-6516-02	2 OF 2	1	CJ-M15W14-PR-A20-000104151	1A	
17	509	RFA	OD32-PAC-HP2-E-6556-01	1 OF 1	0	CJ-M15W14-PR-A20-000104	1A	
18	509	RFA	OD32-PAC-HP2-E-6514-01	1 OF 2	1	CJ-M15W14-PR-A20-000102/151	1A	
19	509	RFA	OD32-PAC-HP2-E-6514-02	2 OF 2	1	CJ-M15W14-PR-A20-000102/151	1A	
20	509	RFA	OD32-PAC-HP2-E-6552-01	1 OF 1	1	CJ-M15W14-PR-A20-000102	1A	

DRAWING LIST FOR TEST PACKAGE

PAC-509

PROJECT NO.: 22328D

PROJECT TITLE : M15X Ph2 Project

No	PKG No	UNIT	LINE NUMBER			P&ID		REMARK
			ISO DRAWING No	SHEET	REV	P&ID No	REV	
21	509	RFA	OD32-PAC-HP2-E-6515-01	1 OF 2	1	CJ-M15W14-PR-A20-000151	1A	
22	509	RFA	OD32-PAC-HP2-E-6515-02	2 OF 2	1	CJ-M15W14-PR-A20-000151	1A	
23	509	RFA	OD32-PAC-HP2-E-6554-01	1 OF 1	1	CJ-M15W14-PR-A20-000103	1A	
24	509	RFA	OD32-PAC-HP2-E-6523-01	1 OF 2	1	CJ-M15W14-PR-A20-000110/151	1A	
25	509	RFA	OD32-PAC-HP2-E-6523-02	2 OF 2	1	CJ-M15W14-PR-A20-000110/151	1A	
26	509	RFA	OD32-PAC-HP2-E-6566-01	1 OF 1	1	CJ-M15W14-PR-A20-000110	1A	
27	509	RFA	OD90-PAC-HP2-E-6513-04	4 OF 4	1	CJ-M15W14-PR-A20-00151	1A	
28	509	RFA	OD32-PAC-HP2-E-6522-01	1 OF 2	1	CJ-M15W14-PR-A20-000109/151	1A	
29	509	RFA	OD32-PAC-HP2-E-6522-02	2 OF 2	1	CJ-M15W14-PR-A20-000109/151	1A	
30	509	RFA	OD32-PAC-HP2-E-6564-01	1 OF 1	1	CJ-M15W14-PR-A20-000109	1A	
31	509	RFA	OD32-PAC-HP2-E-6520-01	1 OF 2	1	CJ-M15W14-PR-A20-000107/151	1A	
32	509	RFA	OD32-PAC-HP2-E-6520-02	2 OF 2	1	CJ-M15W14-PR-A20-000107/151	1A	
33	509	RFA	OD32-PAC-HP2-E-6560-01	1 OF 1	1	CJ-M15W14-PR-A20-000107	1A	
34	509	RFA	OD32-PAC-HP2-E-6521-01	1 OF 2	1	CJ-M15W14-PR-A20-000108/151	1A	
35	509	RFA	OD32-PAC-HP2-E-6521-02	2 OF 2	1	CJ-M15W14-PR-A20-000108/151	1A	
36	509	RFA	OD32-PAC-HP2-E-6562-01	1 OF 1	1	CJ-M15W14-PR-A20-000108	1A	

ITEM NO.			W14-T-PAC-4605 A
SERVICE			PAC STORAGE TANK
Q'TY			1
TYPE			VERTICAL & CYLINDRICAL
SIZE	ID x H	m	4.0 x 4.5 (EH 4.2) 1A
CAPA.	m3		57 (EH 53)
MAT'L			FRP

PAC-509

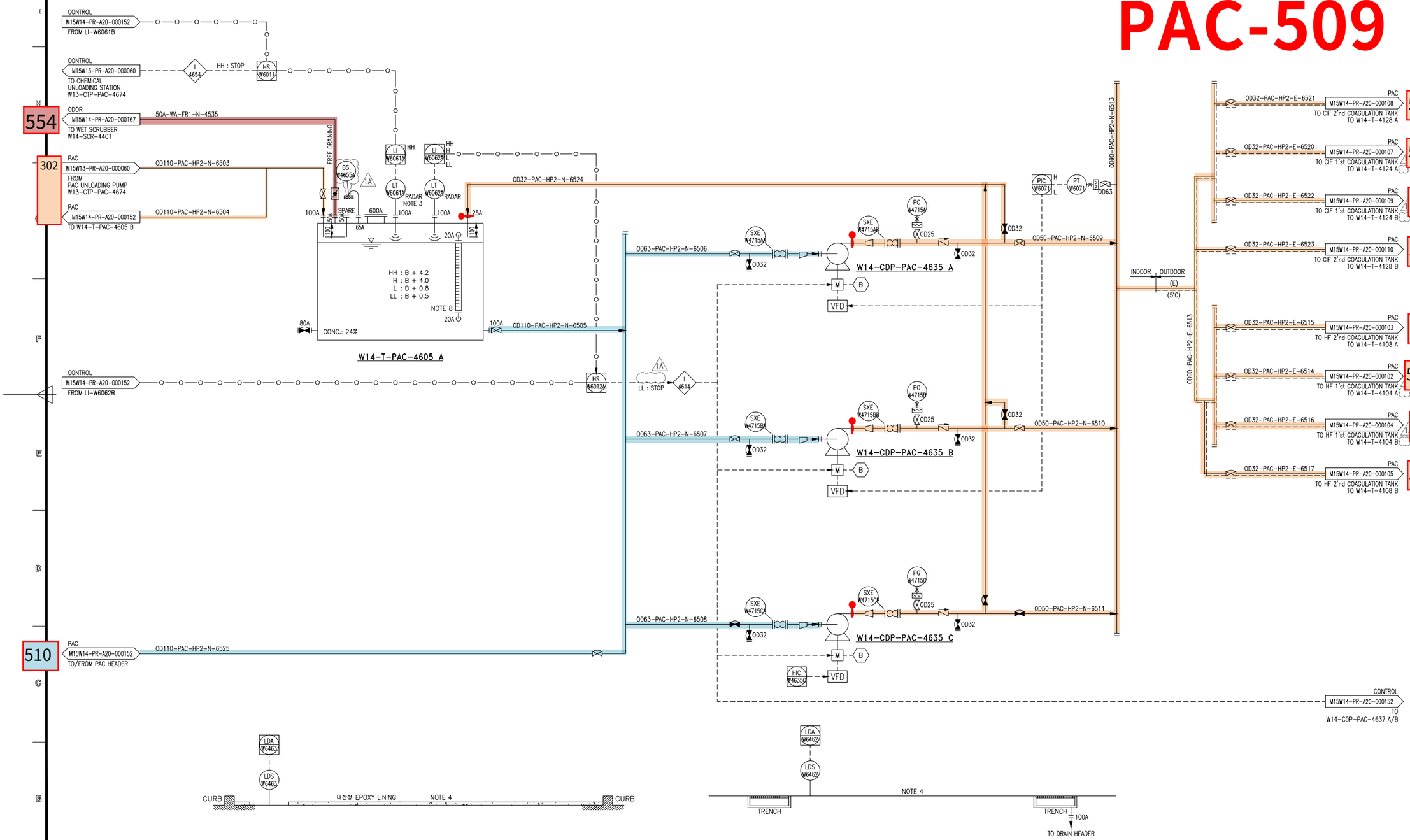

ITEM NO.		W14-CDP-PAC-4635 A/B/C
SERVICE		PAC FEED PUMP
Q'TY		2 + 1
TYPE		CENTRIFUGAL (VVVF)
CAPA.	m3/hr.ea x MPa	4 x 0.46
MAT'L		FRP/FRP
POWER	kW	11 1A

대외비

KEY PLAN (4F)

NOTE

1. CENTRIFUGAL PUMP
   MAT'L 표기 : CASING/IMPELLER
2. 약품종류에 따라 LINE 색상을 구분하여야 한다.
3. CHEMICAL UNLOADING STATION에서 LEVEL을 볼 수 있도록 한다.
   EMICAL STORAGE TANK CURB 및 PUMP AREA에서 생되는 DRAIN은 인근의 TRENCH로 집수되어, AIN HEADER로 이송된다.
5. INTERLOCK NO. I-4654
   (W13-CTP-PAC-4674 AUTO STOP)
   REMOTE STATUS에서 W14-T-PAC-4605 A/B
   VEL (LI-W6061 A/B) HIGH HIGH STOP.
   TERLOCK NO. I-4614
   14-CDP-PAC-4635 A/B/C
   , W14-CDP-PAC-4637 A/B AUTO STOP)
   : REMOTE STATUS에서 W14-T-PAC-4605 A/B
   VEL (LI-W6062 A/B) LOW LOW STOP.
   시 CLOSE 되는 배관에는 LOTO 설치.
   UK의 역면 레벨 게이지는 VENDOR에서 공급한다.

REV.	DESCRIPTION	DATE
1A	REVISED AFC	25.08.14
1	REVISED AFC	25.01.17
0	APPROVAL FOR CONSTRUCTION	24.09.30

제 도 DRAWN BY	이 인 학
검 토 CHECKED BY	한 진 희
승 인 APPROVED BY	박 동 영
제 작 사	SK 에코플랜트
공 사 명 PROJECT TITLE	M15X Ph4 WWT Project
도면명 DWG. TITLE	PIPING & INSTRUMENT DIAGRAM PAC STORAGE TANK & FEED PUMP (1/2)
축 척 SCALE	NONE
날 짜 DATE	2025. 08. 14
PROJECT NO.	22330D
도면번호 SHEET NO.	CJ-M15W14-PR-A20-000151
REV.	1A

A1(594x841mm ±2mm)

C:₩Users₩TOPW₩Desktop₩P&ID251013₩[M15X Ph-4 for 인허가]CAD FILE_0910₩CJ-M15W14-PR-A20-000151 R1 P&ID FOR PAC S

ITEM NO.	W14-T-4102 A	W14-T-4103 A	W14-T-4104 A	W14-T-4105 A	W14-T-4106 A
SERVICE	HF 1'st NEUTRALIZATION TANK	HF 1'st COAGULATION TANK 1	HF 1'st COAGULATION TANK 2	HF 1'st FLOCCULATION TANK	HF 1'st SETTLING TANK
Q'TY	1	1	1	1	1
TYPE	RECTANGULAR	RECTANGULAR	RECTANGULAR	RECTANGULAR	RECTANGULAR
SIZE (W x L x H | m)	5.5 x 5.625 x 8.15 (EH 7.35)	5.5 x 5.625 x 8.15 (EH 7.35)	5.5 x 5.625 x 8.15 (EH 7.35)	5.5 x 5.625 x 8.15 (EH 7.35)	11.5 x (10.85) x 8.15 (EH 7.0)
CAPA. m3	(252.1 (EH 227.4))	(252.1 (EH 227.4))	(252.1 (EH 227.4))	(252.1 (EH 227.4))	(1016.9 (EH 873.4))
HRT min	1A (58.2)	1A (58.2)	1A (58.2)	1A (58.2)	1A 3.7 1A
MAT'L	P.C + FRP	P.C + FRP	P.C + FRP	P.C + FRP	P.C + FRP

PAC-509

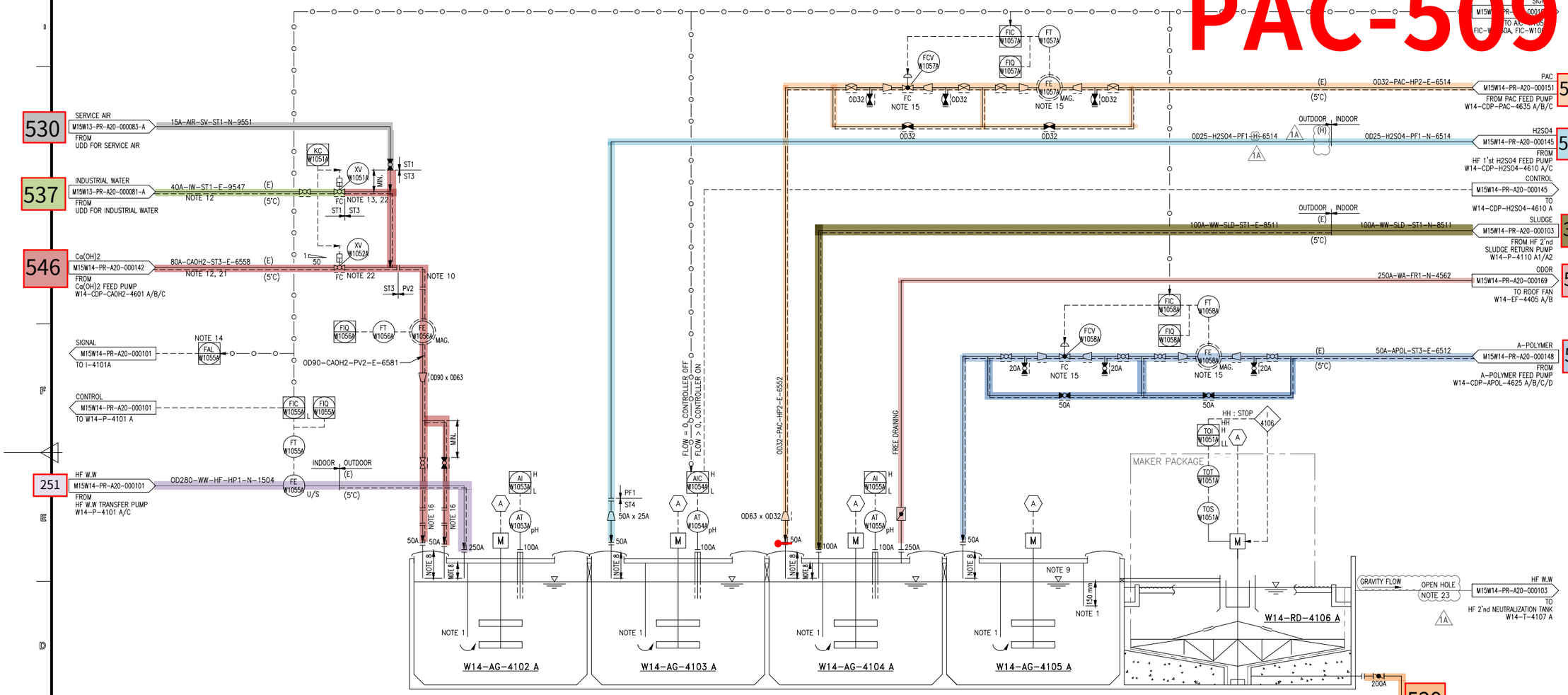

ITEM NO.	W14-AG-4102 A	W14-AG-4103 A	W14-AG-4104 A	W14-AG-4105 A	W14-RD-4106 A	W14-P-4106 A1/A2
SERVICE	HF 1'st NEUTRALIZATION AGITATOR	HF 1'st COAGULATION AGITATOR 1	HF 1'st COAGULATION AGITATOR 2	HF 1'st FLOCCULATION AGITATOR	HF 1'st REDUCER DRIVER	HF 1'st SLUDGE REMOVAL PUMP
Q'TY	1	1	1	1	1	1 + 1
TYPE	HYDRO PADDLE NOTE 11	HYDRO PADDLE NOTE 11	HYDRO PADDLE NOTE 11	HYDRO PADDLE NOTE 11	CYCLO REDUCER	CENTRIFUGAL (VVVF), VORTEX
SPEED | rpm	(30)	(30)	(25)	(25)		
CAPA. m3/d					(0.067)	50 x 20 (0.20MPa)
MAT'L	STS316L/STS316L	STS316L/STS316L	STS316L/STS316L	STS316L/STS316L	STS304/STS304	SSC13/SSC19
POWER | kW	(15)	(15)	(11)	(7.5)	(2.2)	(15)
					MAKER PACKAGE	

대외비

KEY PLAN (5F)

NOTE

1. BAFFLE 재질 : FRP
2. BAFFLE 상부에 0.02 m2 이상 AIR HOLE 설치.
3. TANK와 HWL 이하로 연결되는 모든 배관은 BLOCK 밸브 설치할 것.
4. 2m 이상 높은 곳에 설치된 밸브는 CHAIN VALVE 또는 PLATFORM 구성할 것.
5. MANHOLE : 2개 이상 설치한다. MANHOLE COVER : FRP
6. 운전 시 CLOSE 되는 배관에는 LOTO 설치.
7. CENTRIFUGAL PUMP. MAT'L 표기 : CASING / IMPELLER
8. AGITATOR MAT'L 표기 : SHAFT/BLADE
9. TANK 내 유입시, 육안 확인이 가능하고, 비산이 되지 않도록 최소 깊이로 변형 할 것.
10. Ca(OH)2 배관의 ELBOW 부분은 FLANGE 설치할 것
11. 수중 VENDOR에서 결정한다.
12. 라인은 상부에서 시수 주입하도록 설치한다.
13. XV-W1051A OPEN (12시간마다 15초) 일 경우 : XV-W1052A CLOSE
14. W14-P-4101 A가 RUN 후 30초 후부터 동작한다.
15. INSTRUMENT VENDOR 선정 후 CONTROL SCHEME 및 CONTROL VALVE INLET/OUTLET NOZZLE SIZE 확정
16. 구간 투명 PVC 적용. (주입 여부 확인용)
17. FLUSHING 용 WATER / AIR 배관은 45도 사선으로 연결할 것.

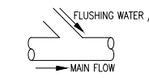

18. SLUDGE REMOVAL PUMP 토출 배관은 PUMP SUCTION 측의 TANK 수위보다 HIGH POINT 형성.
19. SLUDGE PUMP는 TIMER에 의해 운전됨.
20. HIGH POINT에 SIPHON BREAKER 설치할것. (CHECK VALVE의 경우 DUAL PLATE TYPE으로 적용)
21. 소석회 공급 HEADER에서 주입되는 POINT 별 ISOLATION VALVE, ON-OFF VALVE, FLUSHING LINE, SPEC. BREAK 까지 MIN. DISTANCE 적용하여, 막힘 최소화 및 주입배관 교체를 용이하게 한다.
22. XV에 SPEED CONTROLLER (ACCESSORY) 설치.
23. CONCRETE WALL OPENING을 통한 유체 이송 OPENING SIZE IS 800mm x 400mm

REV.	DESCRIPTION	DATE
1A	REVISED AFC	25.08.14
1	REVISED AFC	25.01.17
0	APPROVAL FOR CONSTRUCTION	24.09.30

제 도 DRAWN BY	이 인 학
검 토 CHECKED BY	한 진 희
승 인 APPROVED BY	박 동 영
제 작 사	SK 에코플랜트
공 사 명 PROJECT TITLE	M15X Ph4 WWT Project
도면명 DWG. TITLE	PIPING & INSTRUMENT DIAGRAM HF 1'st COAGULATION & SETTLING TANK A (1/2)
축 척 SCALE	NONE
날 짜 DATE	2025. 08. 14
PROJECT NO.	22330D
도면번호 SHEET NO.	CJ-M15W14-PR-A20-000102 REV. 1A

C:WUsersWTOPWDesktopWP&ID251013W[M15X Ph-4 for 인허가]CAD FILE_0910WCJ-M15W14-PR-A20-000102 R1 P&ID FOR HF 1's

ITEM NO.		W14-T-4107 A
SERVICE		HF 2'nd NEUTRALIZATION TANK
Q'TY		1
TYPE		RECTANGULAR
SIZE	W x L x H | m	5.5 x 5.625 x 8.15 (EH 6.5)
CAPA.	m3	252.1 (EH 201.1)
HRT	min	1A 51.5
MAT'L		P.C + FRP

ITEM NO.		W14-T-4108 A
SERVICE		HF 2'nd COAGULATION TANK
Q'TY		1
TYPE		RECTANGULAR
SIZE	W x L x H | m	5.5 x 5.625 x 8.15 (EH 6.5)
CAPA.	m3	252.1 (EH 201.1)
HRT	min	1A 51.5
MAT'L		P.C + FRP

ITEM NO.		W14-T-4109 A
SERVICE		HF 2'nd FLOCCULATION TANK
Q'TY		1
TYPE		RECTANGULAR
SIZE	W x L x H | m	5.7 x 5.625 x 8.15 (EH 6.5)
CAPA.	m3	261.3 (EH 208.4)
HRT	min	1A 53.4
MAT'L		P.C + FRP

ITEM NO.		W14-T-4110 A
SERVICE		HF 2'nd SETTLING TANK
Q'TY		1
TYPE		RECTANGULAR
SIZE	W x L x H | m	11.7 x 10.85 x 8.15 (EH 6.5)
CAPA.	m3	1034.6 (EH 825.1)
HRT	hr	1A 3.5 1A
MAT'L		P.C + FRP

ITEM NO.		W14-LP-4110 A
SERVICE		LAMELLAR PLATE
Q'TY		1
CAPA.	W x L x H | m	BY VENDOR
SURFACE LOAD		20 m3/m2.d 이하 (Qmax : 6,450m3/d)
MAT'L		ABS+SS304

MAKER PACKAGE

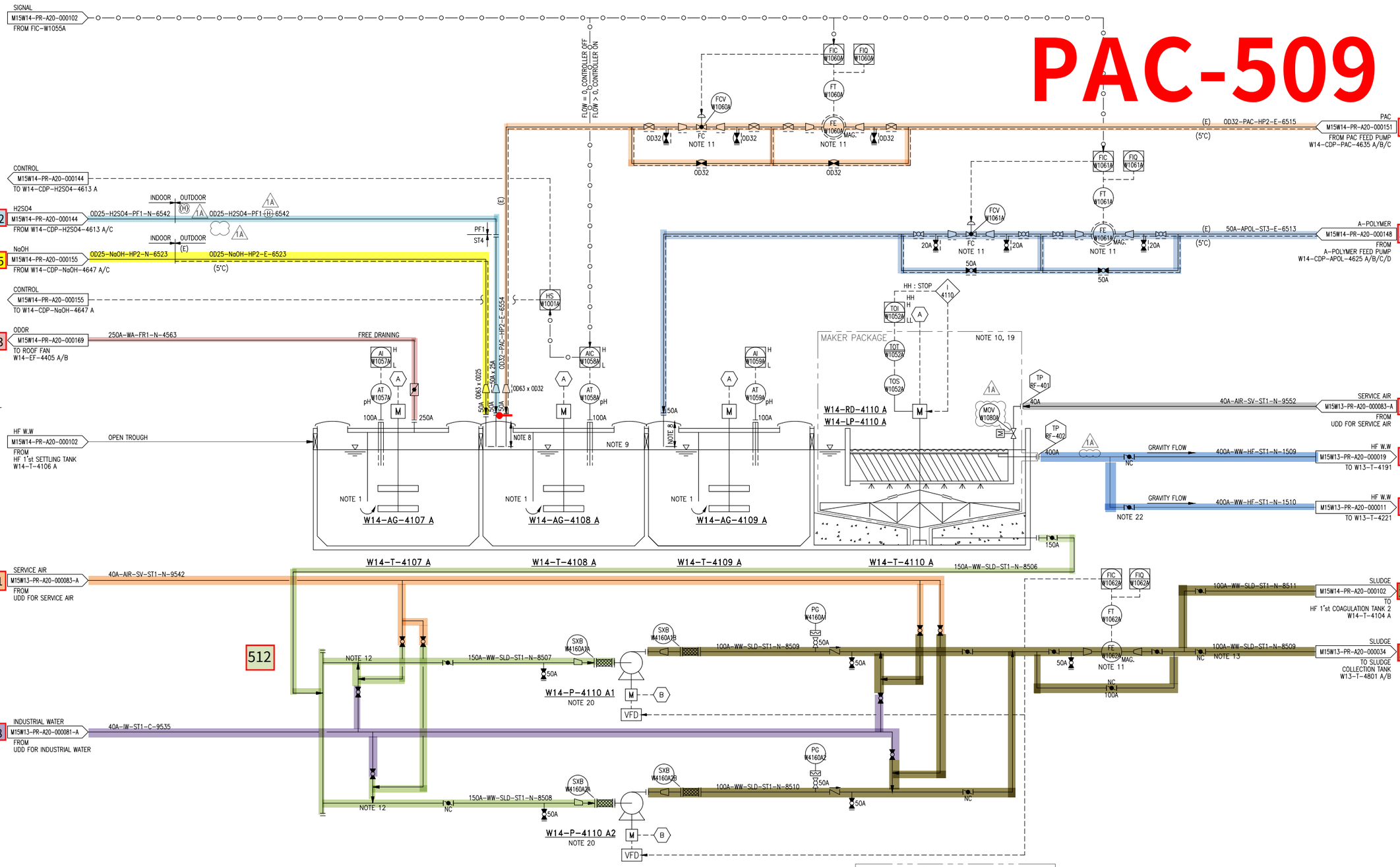

ITEM NO.		W14-AG-4107 A
SERVICE		HF 2'nd NEUTRALIZATION AGITATOR
Q'TY		1
TYPE		HYDRO PADDLE NOTE 15
SPEED	rpm	1A (30)
MAT'L		STS316L/STS316L
POWER	kW	1A (15)

ITEM NO.		W14-AG-4108 A
SERVICE		HF 2'nd COAGULATION AGITATOR
Q'TY		1
TYPE		HYDRO PADDLE NOTE 15
SPEED	rpm	1A (25)
MAT'L		STS316L/STS316L
POWER	kW	1A (11)

ITEM NO.		W14-AG-4109 A
SERVICE		HF 2'nd FLOCCULATION AGITATOR
Q'TY		1
TYPE		HYDRO PADDLE NOTE 15
SPEED	rpm	1A (25)
MAT'L		STS316L/STS316L
POWER	kW	1A (7.5)

MAKER PACKAGE

ITEM NO.		W14-RD-4110 A
SERVICE		HF 2'nd REDUCER DRIVER
Q'TY		1
TYPE		CYCLO REDUCER
CAPA.	m3/d	1A (0.067)
MAT'L		STS304/STS304
POWER	kW	1A (2.2)

ITEM NO.		W14-P-4110 A1/A2
SERVICE		HF 2'nd SLUDGE RETURN PUMP
Q'TY		1 + 1
TYPE		CENTRIFUGAL (VWF), VORTEX
CAPA.	m3/hr.ea x mH	50 x 30 (0.29MPa)
MAT'L		SSC13/SSC19
POWER	kW	1A (30)

대외비

KEY PLAN (5F)

NOTE

1. BAFFLE 재질 : FRP
   BAFFLE 상부에 0.02 m2 이상 AIR HOLE 설치.
2. TANK와 HWL 이하로 연결되는 모든 배관은 BLOCK 밸브 설치할 것.
3. 2m 이상 높은 곳에 설치된 밸브는 CHAIN VALVE 또는 PLATFORM 구성할 것.
4. MANHOLE : 2개 이상 설치한다.
   MANHOLE COVER : FRP
5. 운전 시 CLOSE 되는 배관에는 LOTO 설치.
6. CENTRIFUGAL PUMP.
   MAT'L 표기 : CASING / IMPELLER
7. AGITATOR MAT'L 표기 : SHAFT/BLADE
8. TANK 내 유입시, 육안 확인이 가능하고, 비산이 되지 않도록 최소 깊이로 반영 할 것.
   (SLAB 으로부터 100mm 띄어질 것)
9. 내부 FRP LINING TANK의 SLEEVE는 SUS304 + FRP LINING 적용.
10. 위어 것수등의 상세사항은 추후 VENDOR에서 결정한다.
11. INSTRUMENT VENDOR 선정 후 CONTROL SCHEME 및 CONTROL VALVE INLET/OUTLET NOZZLE SIZE 확정 예정.
12. FLUSHING 용 WATER / AIR 배관은 45도 사선으로 연결할 것.

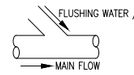

13. SLUDGE REMOVAL PUMP 토출 배관은 PUMP SUCTION 측의 TANK 수위보다 HIGH POINT 형성.
14. DELETED.
15. DELETED.
16. DELETED.
17. DELETED.
18. DELETED.
19. 경사만 청소 및 유지관리시설을 PACKAGE VENDOR 공급범위에 포함할 것.
20. SLUDGE PUMP는 TIMER에 의해 운전됨.
21. DELETED.
22. VALVE 이용이 잦은 기능해야 하며, LIMIT SWITCH가 육안에 보이게 설치 해야 함.

REV.	설 명 DESCRIPTION	날 짜 DATE
1A	REVISED AFC	25.08.14
1	REVISED AFC	25.01.17
0	APPROVAL FOR CONSTRUCTION	24.09.30

제 도 DRAWN BY	이 인 학
검 토 CHECKED BY	한 진 희
승 인 APPROVED BY	박 동 영
제 작 사	SK 에코플랜트
공 사 명 PROJECT TITLE	M15X Ph4 WWT Project
도면명 DWG. TITLE	PIPING & INSTRUMENT DIAGRAM HF 2'nd COAGULATION & SETTLING TANK A (1/2)
축 척 SCALE	NONE
날 짜 DATE	2025. 08. 14
PROJECT NO.	22330D
REV.	1A
도면번호 SHEET NO.	CJ-M15W14-PR-A20-000103

C:WUsersWTOPWDesktopWP&ID251013W[M15X Ph-4 for 인허가]CAD FILE_0910WCJ-M15W14-PR-A20-000103 R1 P&ID FOR HF 2'n

ITEM NO.		W14-T-4102 B	W14-T-4103 B	W14-T-4104 B	W14-T-4105 B	W14-T-4106 B
SERVICE		HF 1'st NEUTRALIZATION TANK	HF 1'st COAGULATION TANK 1	HF 1'st COAGULATION TANK 2	HF 1'st FLOCCULATION TANK	HF 1'st SETTLING TANK
Q'TY		1	1	1	1	1
TYPE		RECTANGULAR	RECTANGULAR	RECTANGULAR	RECTANGULAR	RECTANGULAR
SIZE	W x L x H m	5.5 x 5.3 x 8.15 (EH 7.35)	5.5 x 5.625 x 8.15 (EH 7.35)	5.625 x 5.625 x 8.15 (EH 7.35)	5.625 x 5.3 x 8.15 (EH 7.35)	11.25 x 10.75 x 8.15 (EH 7.0)
CAPA.	m3	237.6 (EH 214.3)	252.1 (EH 227.4)	257.9 (EH 232.6)	243.0 (EH 219.1)	985.6 (EH 846.6)
HRT	min	54.8	1A 58.2	1A 59.5	1A 56.1	1A 3.6 1A
MAT'L		P.C + FRP	P.C + FRP	P.C + FRP	P.C + FRP	P.C + FRP

PAC-509

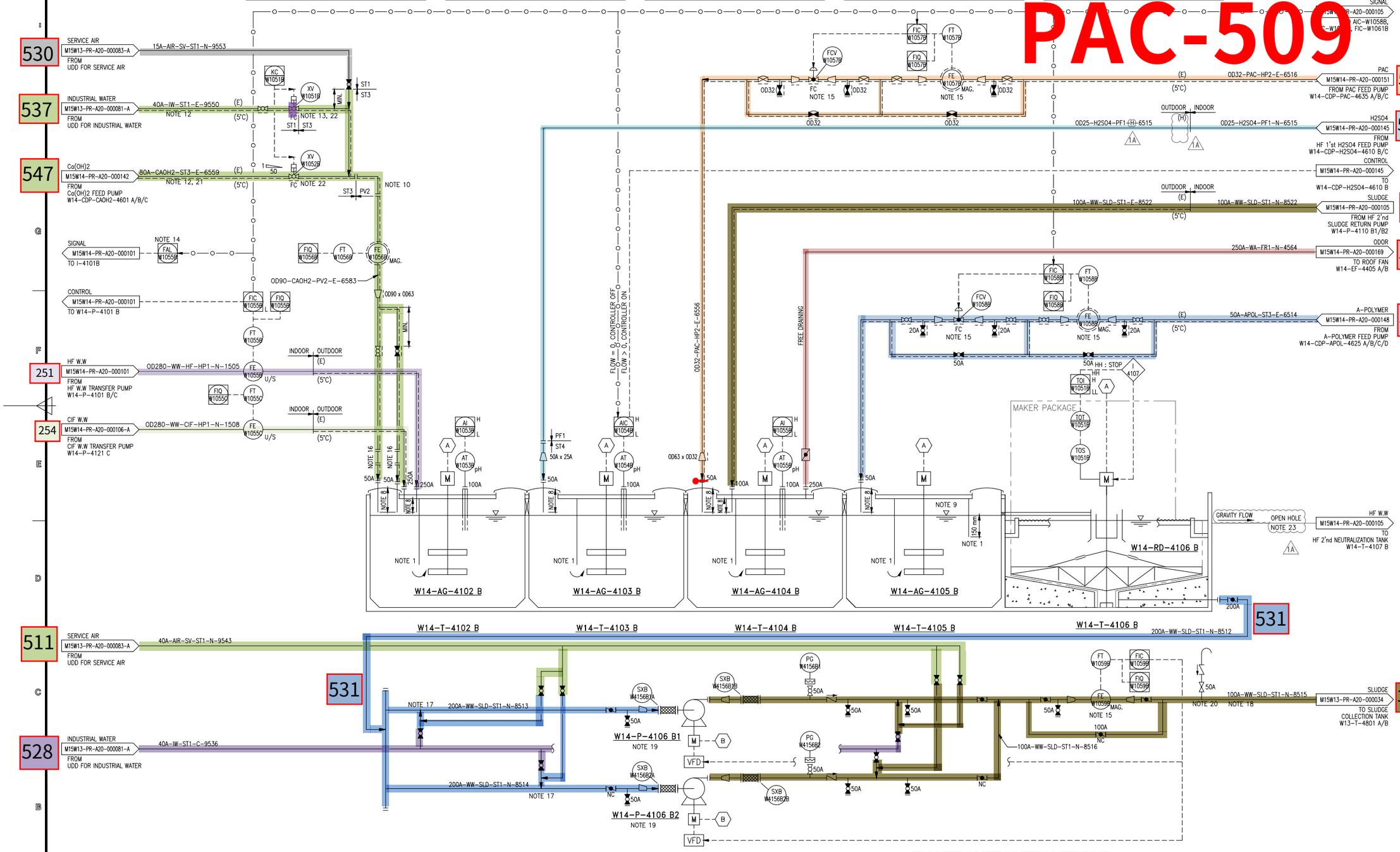

ITEM NO.		W14-AG-4102 B	W14-AG-4103 B	W14-AG-4104 B	W14-AG-4105 B	W14-RD-4106 B	W14-P-4106 B1/B2
SERVICE		HF 1'st NEUTRALIZATION AGITATOR	HF 1'st COAGULATION AGITATOR 1	HF 1'st COAGULATION AGITATOR 2	HF 1'st FLOCCULATION AGITATOR	HF 1'st REDUCER DRIVER	HF 1'st SLUDGE REMOVAL PUMP
Q'TY		1	1	1	1	1 + 1	1 + 1
TYPE		HYDRO PADDLE NOTE 11	HYDRO PADDLE NOTE 11	HYDRO PADDLE NOTE 11	HYDRO PADDLE NOTE 11	CYCLO REDUCER	CENTRIFUGAL (VVVF), VORTEX
SPEED	rpm	30	30	25	25		
CAPA.	m3/d					0.067	50 x 20 (0.20MPa)
CAPA.	m3/hr.ea x mH						
MAT'L		STS316L/STS316L	STS316L/STS316L	STS316L/STS316L	STS316L/STS316L	STS304/STS304	SSC13/SSC19
POWER	kW	15	15	11	7.5	2.2	15

MAKER PACKAGE

대외비

KEY PLAN (5F)

NOTE

1. BAFFLE 재질 : FRP
   BAFFLE 상부에 0.02 m2 이상 AIR HOLE 설치.
2. 509 NK와 HWL 이하로 연결되는 모든 배관은 BLOCK 밸브 설치할 것.
3. 2m 이상 높은 곳에 설치된 밸브는 CHAIN VALVE 또는 PLATFORM 구성할 것.
4. 502 MANHOLE : 2개 이상 설치한다.
   MANHOLE COVER : FRP
5. 운전 시 CLOSE 되는 배관에는 LOTO 설치.
6. CENTRIFUGAL PUMP.
   MAT'L 표기 : CASING / IMPELLER
7. AGITATOR MAT'L 표기 : SHAFT/BLADE
8. TANK 내 유입시, 확인 확인이 가능하고, 비산이 되지 않도록 최소 깊이로 변형 할 것.
9. 375 TANK 바닥으로부터 100mm 띄어질 것)
10. 375 FRP LINING TANK의 SLEEVE는 SS304 + FRP LINING 적용.
11. Co(OH)2 배관의 ELBOW 부분은 FLANGE 설치할 것
12. 추후 VENDOR에서 결정한다.
13. 513 배관라인은 상부에서 시수 주입하도록 설치한다.
    W1051B OPEN (12시간마다 15초) 일 경우 : W1052B CLOSE
14. W14-P-4101 B가 RUN 후 30초 후부터 동작한다.
15. INSTRUMENT VENDOR 선정 후 CONTROL SCHEME 및 CONTROL VALVE INLET/OUTLET NOZZLE SIZE 확정
16. 514 배관구간 투명 PVC 적용. (주입 여부 확인용)
17. FLUSHING 용 WATER / AIR 배관은 45도 사선으로 연결할 것.

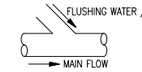

18. SLUDGE REMOVAL PUMP 토출 배관은 PUMP SUCTION 측의 TANK 수위보다 HIGH POINT 형성.
19. SLUDGE PUMP는 TIMER에 의해 운전됨.
20. HIGH POINT에 SIPHON BREAKER 설치할것.
    (CHECK VALVE의 경우 DUAL PLATE TYPE으로 적용)
21. 소석회 공급 HEADER에서 주입되는 POINT 별 ISOLATION VALVE, ON-OFF VALVE, FLUSHING LINE, SPEC. BREAK 까지 MIN. DISTANCE 적용하여, 막힘 최소화 및 주입배관 고정물 용이하게 한다.
22. XV에 SPEED CONTROLLER (ACCESSORY) 설치.
23. CONCRETE WALL OPENING을 통한 유체 이송 OPENING SIZE IS 800mm x 400mm

REV.	DESCRIPTION	DATE
1A	REVISED AFC	25.08.14
1	REVISED AFC	25.01.17
0	APPROVAL FOR CONSTRUCTION	24.09.30

제 도 DRAWN BY	이 인 학
검 토 CHECKED BY	한 진 희
승 인 APPROVED BY	박 동 영
제 작 사	SK 에코플랜트
공 사 명 PROJECT TITLE	M15X Ph4 WWT Project
도면명 DWG. TITLE	PIPING & INSTRUMENT DIAGRAM HF 1'st COAGULATION & SETTLING TANK B (2/2)
축 척 SCALE	NONE
날 짜 DATE	2025. 08. 14
PROJECT NO.	22330D
도면번호 SHEET NO.	CJ-M15W14-PR-A20-000104
REV.	1A

A1(594x841mm ±2mm)

C:₩Users₩TOPW₩Desktop₩P&ID₩251013₩[M15X Ph-4 for 인허가]CAD FILE_0910₩CJ-M15W14-PR-A20-000104 R1 P&ID FOR HF 1's

ITEM NO.		W14-T-4107 B
SERVICE		HF 2'nd NEUTRALIZATION TANK
Q'TY		1
TYPE		RECTANGULAR
SIZE	W x L x H | m	5.75 x 5.45 x 8.15 (EH 6.5)
CAPA.	m3	255.4 (EH 203.7)
HRT	min	52.1
MAT'L		P.C + FRP

ITEM NO.		W14-T-4108 B
SERVICE		HF 2'nd COAGULATION TANK
Q'TY		1
TYPE		RECTANGULAR
SIZE	W x L x H | m	5.75 x 5.175 x 8.15 (EH 6.5)
CAPA.	m3	242.5 (EH 193.4)
HRT	min	49.5
MAT'L		P.C + FRP

ITEM NO.		W14-T-4109 B
SERVICE		HF 2'nd FLOCCULATION TANK
Q'TY		1
TYPE		RECTANGULAR
SIZE	W x L x H | m	5.625 x 5.175 x 8.15 (EH 6.5)
CAPA.	m3	237.2 (EH 189.2)
HRT	min	48.4
MAT'L		P.C + FRP

ITEM NO.		W14-T-4110 B
SERVICE		HF 2'nd SETTLING TANK
Q'TY		1
TYPE		RECTANGULAR
SIZE	W x L x H | m	11.375 x 10.85 x 8.15 (EH 6.5)
CAPA.	m3	1005.9 (EH 802.2)
HRT	hr	3.4
MAT'L		P.C + FRP

ITEM NO.		W14-LP-4110 B
SERVICE		LAMELLAR PLATE
Q'TY		1
CAPA.	W x L x H | m	BY VENDOR
SURFACE LOAD		20 m3/m2.d 이하 (Qmax : 6,450m3/d)
MAT'L		ABS+SS304

MAKER PACKAGE

PAC-509

대외비

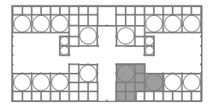

KEY PLAN (5F)

NOTE

1. BAFFLE 재질 : FRP
   BAFFLE 상부에 0.02 m2 이상 AIR HOLE 설치.
2. TANK와 HWL 이하로 연결되는 모든 배관은 BLOCK 밸브 설치할 것.
3. 2m 이상 높은 곳에 설치된 밸브는 CHAIN VALVE 또는 PLATFORM 구성할 것.
4. MANHOLE : 2개 이상 설치한다.
   MANHOLE COVER : FRP
5. 운전시 CLOSE 되는 배관에는 LOTO 설치.
6. CENTRIFUGAL PUMP.
   MAT'L 표기 : CASING / IMPELLER
7. AGITATOR MAT'L 표기 : SHAFT/BLADE
8. TANK 내 유입시, 육안 확인이 가능하고, 비산이 되지 않도록 최소 깊이로 반영 할 것.
   (SLAB 으로부터 100mm 떨어질 것)
9. 내부 FRP LINING TANK의 SLEEVE는 SUS304 + FRP LINING 적용.
10. 기기 및 것수등의 상세사항은 추후 VENDOR에서 결정한다.
11. INSTRUMENT VENDOR 선정 후 CONTROL SCHEME 및 CONTROL VALVE INLET/OUTLET NOZZLE SIZE 확정
12. FLUSHING 용 WATER / AIR 배관은 45도 사선으로 연결할 것.

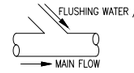

13. SLUDGE REMOVAL PUMP 토출 배관은 PUMP SUCTION 측의 TANK 수위보다 HIGH POINT 형성.
14. DELETED.
15. DELETED.
16. DELETED.
17. DELETED.
18. DELETED.
19. 청소 및 유지관리시설을 PACKAGE VENDOR 공급범위에 포함.
20. SLUDGE PUMP는 TIMER에 의해 운전됨.
21. DELETED.
22. 유지보수 용이 접근 가능해야 하며, SWITCH가 육안에 보이게 설치 해야 함.

1A	REVISED AFC	25.08.14
1	REVISED AFC	25.01.17
	APPROVAL FOR CONSTRUCTION	24.09.30
	설 명 DESCRIPTION	날 짜 DATE

제 도 DRAWN BY: 이 인 학
검 토 CHECKED BY: 한 진 희
승 인 APPROVED BY: 박 동 영
제 작 사: SK 에코플랜트

공 사 명 PROJECT TITLE: M15X Ph4 WWT Project

도면명 DWG. TITLE: PIPING & INSTRUMENT DIAGRAM HF 2'nd COAGULATION & SETTLING TANK B (2/2)

축 척 SCALE: NONE

날 짜 DATE: 2025. 08. 14

PROJECT NO. 22330D | REV. 1A

도면번호 SHEET NO. CJ-M15W14-PR-A20-000105

ITEM NO.		W14-AG-4107 B
SERVICE		HF 2'nd NEUTRALIZATION AGITATOR
Q'TY		1
TYPE		HYDRO PADDLE NOTE 15
SPEED	rpm	30
MAT'L		STS316L/STS316L
POWER	kW	15

ITEM NO.		W14-AG-4108 B
SERVICE		HF 2'nd COAGULATION AGITATOR
Q'TY		1
TYPE		HYDRO PADDLE NOTE 15
SPEED	rpm	25
MAT'L		STS316L/STS316L
POWER	kW	15

ITEM NO.		W14-AG-4109 B
SERVICE		HF 2'nd FLOCCULATION AGITATOR
Q'TY		1
TYPE		HYDRO PADDLE NOTE 15
SPEED	rpm	25
MAT'L		STS316L/STS316L
POWER	kW	7.5

MAKER PACKAGE

ITEM NO.		W14-RD-4110 B
SERVICE		HF 2'nd REDUCER DRIVER
Q'TY		1
TYPE		CYCLO REDUCER
CAPA.	m3/d	0.067
MAT'L		STS304/STS304
POWER	kW	2.2

ITEM NO.		W14-P-4110 B1/B2
SERVICE		HF 2'nd SLUDGE RETURN PUMP
Q'TY		1 + 1
TYPE		CENTRIFUGAL (VWF), VORTEX
CAPA.	m3/hr.ea x mH	50 x 30 (0.29MPa)
MAT'L		SSC13/SSC19
POWER	kW	30

C:WUsersWTOPWDesktopWP&ID251013WIM15X Ph-4 for 인허가CAD FILE_0910WCJ-M15W14-PR-A20-000105 R1 P&ID FOR HF 2'n

ITEM NO.	W14-T-4122 A	W14-T-4123 A	W14-T-4124 A	W14-T-4125 A	W14-T-4126 A
SERVICE	CIF 1'st NEUTRALIZATION TANK	CIF 1'st COAGULATION TANK 1	CIF 1'st COAGULATION TANK 2	CIF 1'st FLOCCULATION TANK	CIF 1'st SETTLING TANK
Q'TY	1	1	1	1	1
TYPE	RECTANGULAR	RECTANGULAR	RECTANGULAR	RECTANGULAR	RECTANGULAR
SIZE W x L x H m	5.5 x 4.925 x 8.15 (EH 7.35)	5.5 x 4.925 x 8.15 (EH 7.35)	5.5 x 4.925 x 8.15 (EH 7.35)	5.5 x 4.925 x 8.15 (EH 7.35)	11.5 x 10.825 x 8.15 (EH 7.0)
CAPA. m3	220.8 (EH 199.1)	220.8 (EH 199.1)	220.8 (EH 199.1)	220.8 (EH 199.1)	1014.6 (EH 871.4)
HRT min	1A 39.4	1A 39.4	1A 39.4	1A 39.4	1A 2.9
MAT'L	P.C + FRP	P.C + FRP	P.C + FRP	P.C + FRP	P.C + FRP

PAC-509

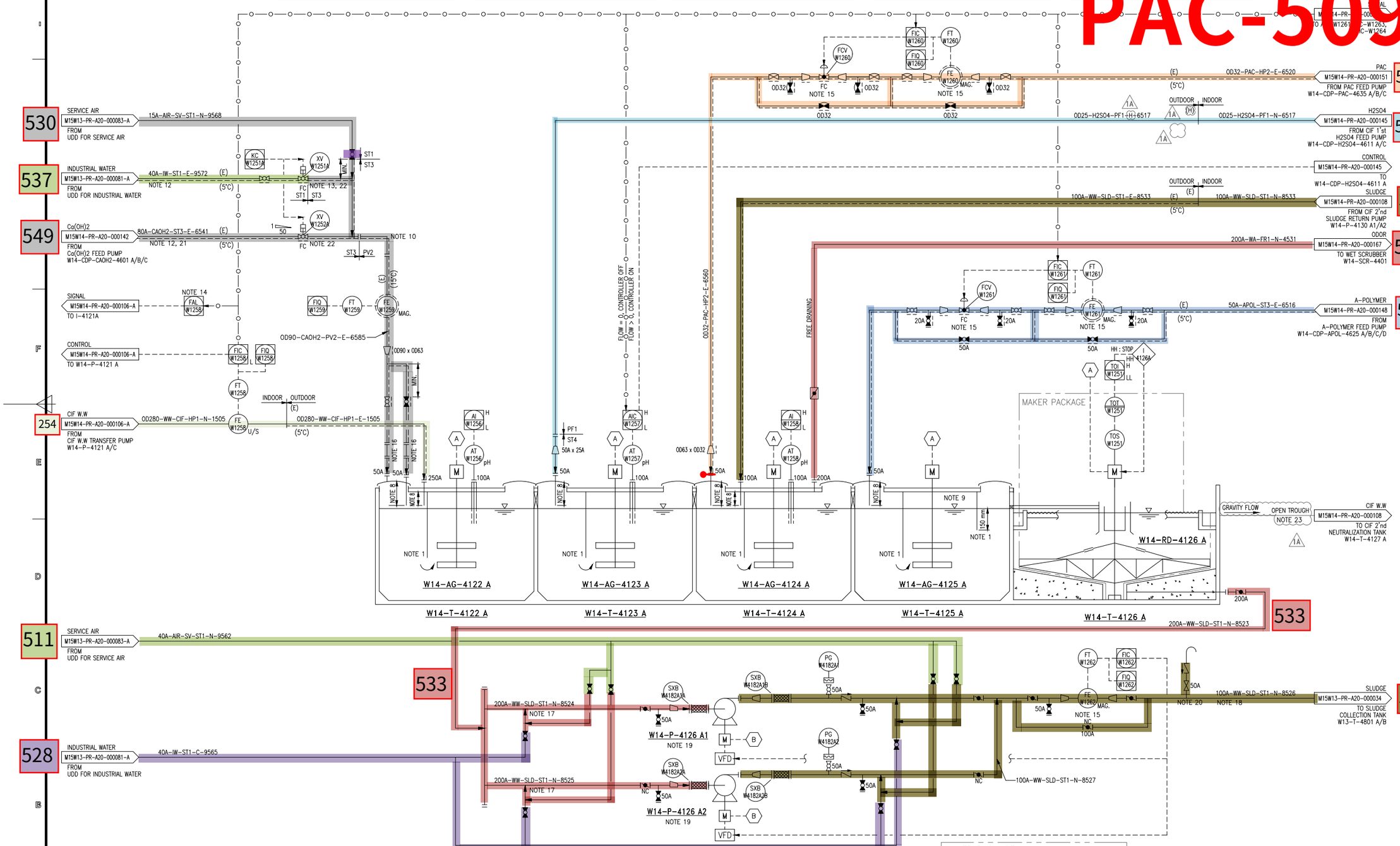

ITEM NO.	W14-AG-4122 A	W14-AG-4123 A	W14-AG-4124 A	W14-AG-4125 A	W14-RD-4126 A	W14-P-4126 A1/A2
SERVICE	CIF 1'st NEUTRALIZATION AGITATOR	CIF1'st COAGULATION AGITATOR 1	CIF 1'st COAGULATION AGITATOR 2	CIF 1'st FLOCCULATION AGITATOR	CIF 1'st REDUCER DRIVER	CIF 1'st SLUDGE REMOVAL PUMP
Q'TY	1	1	1	1	1	1 + 1
TYPE	HYDRO PADDLE NOTE 11	HYDRO PADDLE NOTE 11	HYDRO PADDLE NOTE 11	HYDRO PADDLE NOTE 11	CYCLO REDUCER	CENTRIFUGAL (VWVF), VORTEX
SPEED rpm	30	30	25	25		
CAPA. m3/d					0.067	50 x 20 (0.20MPa)
CAPA. m3/hr.ea x mH						SSC13/SSC19
MAT'L	STS316L/STS316L	STS316L/STS316L	STS316L/STS316L	STS316L/STS316L	STS304/STS304	
POWER kW	15	15	11	7.5		
DRIVER kW					2.2	15

MAKER PACKAGE

대외비

KEY PLAN (5F)

NOTE

1. BAFFLE 재질 : FRP
   FFLE 상부에 0.02 m2 이상 AIR HOLE 설치.
   NK의 HWL 이하로 연결되는 모든 배관은 BLOCK 밸브 치할 것.
3. 2m 이상 높은 곳에 설치된 밸브는 CHAIN VALVE 또는 PLATFORM 구성할 것.
   HOLE : 2개 이상 설치한다.
   HOLE COVER : FRP
   N CLOSE 되는 배관에는 LOTO 설치.
6. CENTRIFUGAL PUMP.
   MAT'L 표기 : CASING / IMPELLER
7. AGITATOR MAT'L 표기 : SHAFT/BLADE
8. TANK 내 유입시, 확인 확인이 가능하고, 비산이 되지 않도록 IC 깊이로 변형 할 것.
   B 으로부터 100mm 띄어질 것)
   FRP LINING TANK의 SLEEVE는 304 + FRP LINING 적용.
10. Ca(OH)2 배관의 ELBOW 부분은 FLANGE 설치할 것
    VENDOR에서 결정한다.
    라인은 상부에서 시수 주입하도록 설치한다.
    -W1251A OPEN (12시간마다 15초) 일 경우 :
    XV-W1252A CLOSE
14. W14-P-4121 A가 RUN 후 30초 후부터 동작한다.
15. INSTRUMENT VENDOR 선정 후 CONTROL SCHEME 및 CONTROL VALVE INLET/OUTLET NOZZLE SIZE 확정
    구간 투명 PVC 적용. (주입 여부 확인용)
    FLUSHING 용 WATER / AIR 배관은 45도 사선으로 연결할 것.
18. SLUDGE REMOVAL PUMP 토출 배관은 PUMP SUCTION 측의 TANK 수위보다 HIGH POINT 형성.
19. SLUDGE PUMP는 TIMER에 의해 운전됨.
20. HIGH POINT에 SIPHON BREAKER 설치할것. (CHECK VALVE의 경우 DUAL PLATE TYPE으로 적용)
21. 소석회 공급 HEADER에서 주입되는 POINT 별 ISOLATION VALVE, ON-OFF VALVE, FLUSHING LINE, SPEC. BREAK 까지 MIN. DISTANCE 적용하여, 막힘 최소화 및 주입배관 교체를 용이하게 한다.
22. XV에 SPEED CONTROLLER (ACCESSORY) 설치.
23. CONCRETE WALL OPENING을 통한 유체 이송 OPENING SIZE IS 800mm x 400mm

FLUSHING WATER / AIR
MAIN FLOW

REV.	설 명 DESCRIPTION	날 짜 DATE
1A	REVISED AFC	25.08.14
1	REVISED AFC	25.01.17
0	APPROVAL FOR CONSTRUCTION	24.09.30

제 도 DRAWN BY	이 인 학
검 토 CHECKED BY	한 진 희
승 인 APPROVED BY	박 동 영
제 작 사	SK 에코플랜트
공 사 명 PROJECT TITLE	M15X Ph4 WWT Project
도면명 DWG. TITLE	PIPING & INSTRUMENT CIAGRAM CIF 1'st COAGULATION & SETTLING TANK A (1/2)
축 척 SCALE	NONE
날 짜 DATE	2025. 08. 14
PROJECT NO.	22330D
도면번호 SHEET NO.	CJ-M15W14-PR-A20-000107
REV.	1A

C:₩Users₩TOPWDesktop₩P&ID251013₩[M15X Ph-4 for 인허가]CAD FILE_0910₩CJ-M15W14-PR-A20-000107 R1 P&ID FOR CIF 1's

ITEM NO.		W14-T-4127 A
SERVICE		CIF 2'nd NEUTRALIZATION TANK
Q'TY		1
TYPE		RECTANGULAR
SIZE	W x L x H | m	5.5 x 4.925 x 8.15 (EH 6.5)
CAPA.	m3	220.8 (EH 176.1)
HRT	min	1A 34.9
MAT'L		P.C + FRP

ITEM NO.		W14-T-4128 A
SERVICE		CIF 2'nd COAGULATION TANK
Q'TY		1
TYPE		RECTANGULAR
SIZE	W x L x H | m	5.5 x 4.925 x 8.15 (EH 6.5)
CAPA.	m3	220.8 (EH 176.1)
HRT	min	1A 34.9
MAT'L		P.C + FRP

ITEM NO.		W14-T-4129 A
SERVICE		CIF 2'nd FLOCCULATION TANK
Q'TY		1
TYPE		RECTANGULAR
SIZE	W x L x H | m	5.7 x 4.925 x 8.15 (EH 6.5)
CAPA.	m3	228.8 (EH 182.5)
HRT	min	1A 36.1
MAT'L		P.C + FRP

ITEM NO.		W14-T-4130 A
SERVICE		CIF 2'nd SETTLING TANK
Q'TY		1
TYPE		RECTANGULAR
SIZE	W x L x H | m	11.7 x 10.825 x 8.15 (EH 6.5)
CAPA.	m3	1032.2 (EH 823.2)
HRT	hr	1A 2.7
MAT'L		P.C + FRP

MAKER PACKAGE

ITEM NO.		W14-LP-4130 A
SERVICE		LAMELLAR PLATE
Q'TY		1
CAPA.	W x L x H | m	BY VENDOR
SURFACE LOAD		20 m3/m2.d 이하 (Qmax : 6,450m3/d)
MAT'L		ABS+SS304

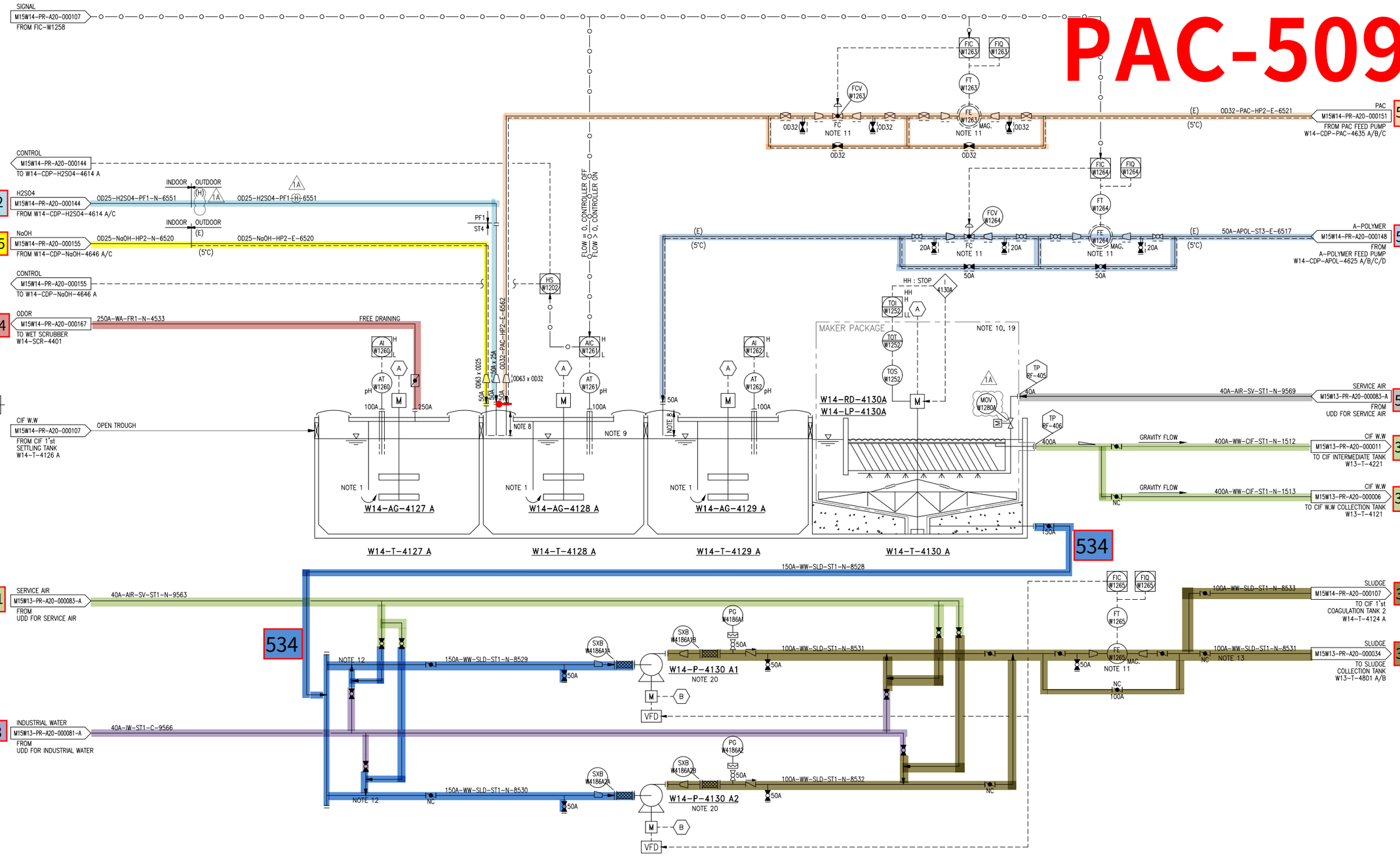

ITEM NO.		W14-AG-4127 A
SERVICE		CIF 2'nd NEUTRALIZATION AGITATOR
Q'TY		1
TYPE		HYDRO PADDLE NOTE 15
SPEED	rpm	1A 30
MAT'L		STS316L/STS316L
POWER	kW	1A 15

ITEM NO.		W14-AG-4128 A
SERVICE		CIF 2'nd COAGULATION AGITATOR
Q'TY		1
TYPE		HYDRO PADDLE NOTE 15
SPEED	rpm	1A 25
MAT'L		STS316L/STS316L
POWER	kW	1A 11

ITEM NO.		W14-AG-4129 A
SERVICE		CIF 2'nd FLOCCULATION AGITATOR
Q'TY		1
TYPE		HYDRO PADDLE NOTE 15
SPEED	rpm	1A 25
MAT'L		STS316L/STS316L
POWER	kW	1A 7.5

MAKER PACKAGE

ITEM NO.		W14-RD-4130 A
SERVICE		CIF 2'nd REDUCER DRIVER
Q'TY		1
TYPE		CYCLO REDUCER
CAPA.	m3/hr.ea x mH	1A 0.067
MAT'L		STS304/STS304
POWER	kW	1A 2.2

ITEM NO.		W14-P-4130 A1/A2
SERVICE		CIF 2'nd SLUDGE RETURN PUMP
Q'TY		1 + 1
TYPE		CENTRIFUGAL (VVVF), VORTEX
CAPA.	m3/hr.ea x mH	50 x 30 (0.29MPa)
MAT'L		SSC13/SSC19
POWER	kW	30 1A

대외비

KEY PLAN (5F)

NOTE

1. BAFFLE 재질 : FRP
   BAFFLE 상부에 0.02 m2 이상 AIR HOLE 설치.
2. TANK와 HWL 이하로 연결되는 모든 배관은 BLOCK 밸브 설치할 것.
3. 2m 이상 높은 곳에 설치된 밸브는 CHAIN VALVE 또는 PLATFORM 구성할 것.
4. MANHOLE : 2개 이상 설치한다.
   MANHOLE COVER : FRP
5. 운전 시 CLOSE 되는 배관에는 LOTO 설치.
6. CENTRIFUGAL PUMP.
   MAT'L 표기 : CASING / IMPELLER
7. AGITATOR MAT'L 표기 : SHAFT/BLADE
8. TANK 내 유입시, 확인 확인이 가능하고, 비산이 되지 않도록 최소 깊이로 반영 할 것.
   (SLAB 으로부터 100mm 떨어질 것)
9. 내부 FRP LINING TANK의 SLEEVE는 SUS304 + FRP LINING 적용.
10. 위어 것수등의 상세사항은 추후 VENDOR에서 결정한다.
11. INSTRUMENT VENDOR 선정 후 CONTROL SCHEME 및 CONTROL VALVE INLET/OUTLET NOZZLE SIZE 확정 할 것.
12. FLUSHING 용 WATER / AIR 배관은 45도 사선으로 연결할 것.

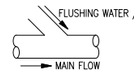

13. SLUDGE REMOVAL PUMP 토출 배관은 PUMP SUCTION 측의 TANK 수위보다 HIGH POINT 형성.
14. DELETED.
15. DELETED.
16. DELETED.
17. DELETED.
18. DELETED.
19. 상차판 청소 및 유지관리시설을 PACKAGE VENDOR 공급범위에 포함할 것.
20. SLUDGE PUMP는 TIMER에 의해 운전됨.
21. DELETED.

REV.	정	설 명 DESCRIPTION	날 짜 DATE
1A		REVISED AFC	25.08.14
1		REVISED AFC	25.01.17
0		APPROVAL FOR CONSTRUCTION	24.09.30

제 도 DRAWN BY	이 인 학
검 토 CHECKED BY	한 진 희
승 인 APPROVED BY	박 동 영
제 작 사	SK 에코플랜트
공 사 명 PROJECT TITLE	M15X Ph4 WWT Project
도면명 DWG. TITLE	PIPING & INSTRUMENT AIAGRAM CIF 2'nd COAGULATION & SETTLING TANK A (1/2)
축 척 SCALE	NONE
날 짜 DATE	2025. 08. 14
PROJECT NO.	22330D
도면번호 SHEET NO.	CJ-M15W14-PR-A20-000108
REV.	1A

A1(594x841mm ±2mm)

C:WUsersWTOPWDesktopWP&ID251013WM15X Ph-4 for 인허가ICAD FILE_090WCJ-M15W14-PR-A20-000108 R1 P&ID FOR CIF 2'

ITEM NO.		W14-T-4122 B
SERVICE		CIF 1'st NEUTRALIZATION TANK
Q'TY		1
TYPE		RECTANGULAR
SIZE	W x L x H m	5.5 x 6.5 x 8.15 (EH 7.35)
CAPA.	m3	291.4 (EH 262.8)
HRT	min	52.0
MAT'L		P.C + FRP

ITEM NO.		W14-T-4123 B
SERVICE		CIF 1'st COAGULATION TANK 1
Q'TY		1
TYPE		RECTANGULAR
SIZE	W x L x H m	5.5 x 4.925 x 8.15 (EH 7.35)
CAPA.	m3	220.8 (EH 199.1)
HRT	min	1A 39.4
MAT'L		P.C + FRP

ITEM NO.		W14-T-4124 B
SERVICE		CIF 1'st COAGULATION TANK 2
Q'TY		1
TYPE		RECTANGULAR
SIZE	W x L x H m	5.625 x 4.925 x 8.15 (EH 7.35)
CAPA.	m3	225.8 (EH 203.6)
HRT	min	1A 40.3
MAT'L		P.C + FRP

ITEM NO.		W14-T-4125 B
SERVICE		CIF 1'st FLOCCULATION TANK
Q'TY		1
TYPE		RECTANGULAR
SIZE	W x L x H m	5.625 x 6.5 x 8.15 (EH 7.35)
CAPA.	m3	298.0 (EH 268.7)
HRT	min	1A 53.2
MAT'L		FRP

ITEM NO.		W14-T-4126 B
SERVICE		CIF 1'st SETTLING TANK
Q'TY		1
TYPE		RECTANGULAR
SIZE	W x L x H m	11.25 x 12.25 x 8.15 (EH 7.0)
CAPA.	m3	1123.2 (EH 964.7)
HRT	hr	1A 3.2
MAT'L		FRP

PAC-509

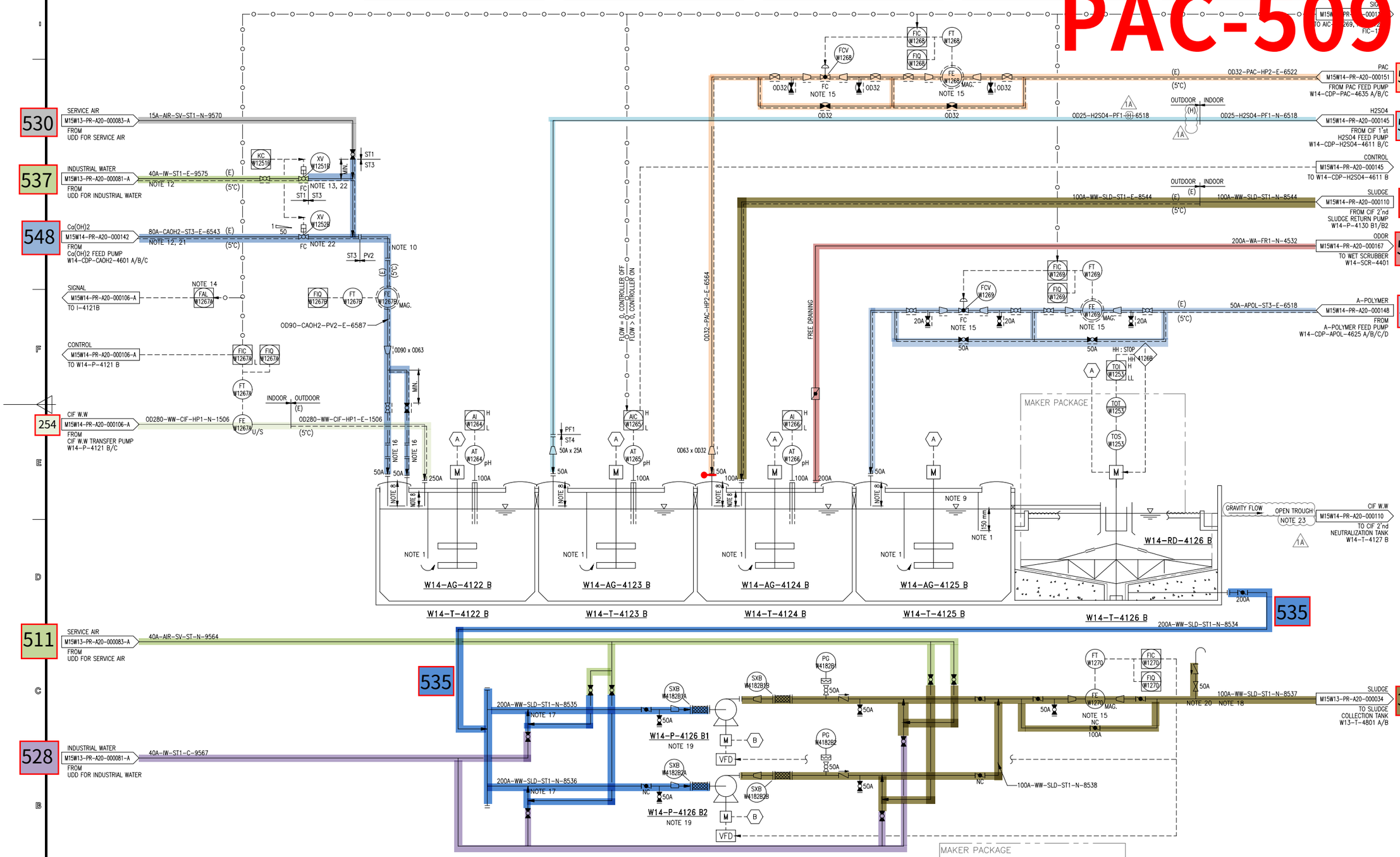

ITEM NO.		W14-AG-4122 B
SERVICE		CIF 1'st NEUTRALIZATION AGITATOR
Q'TY		1
TYPE		HYDRO PADDLE NOTE 11
SPEED	rpm	30
MAT'L		STS316L/STS316L
POWER	kW	15

ITEM NO.		W14-AG-4123 B
SERVICE		CIF 1'st COAGULATION AGITATOR 1
Q'TY		1
TYPE		HYDRO PADDLE NOTE 11
SPEED	rpm	30
MAT'L		STS316L/STS316L
POWER	kW	15

ITEM NO.		W14-AG-4124 B
SERVICE		CIF 1'st COAGULATION AGITATOR 2
Q'TY		1
TYPE		HYDRO PADDLE NOTE 11
SPEED	rpm	25
MAT'L		STS316L/STS316L
POWER	kW	11

ITEM NO.		W14-AG-4125 B
SERVICE		CIF 1'st FLOCCULATION AGITATOR
Q'TY		1
TYPE		HYDRO PADDLE NOTE 11
SPEED	rpm	25
MAT'L		STS316L/STS316L
POWER	kW	7.5

MAKER PACKAGE

ITEM NO.		W14-RD-4126 B
SERVICE		CIF 1'st REDUCER DRIVER
Q'TY		1
TYPE		CYCLO REDUCER
CAPA.	m3/d	0.067
MAT'L		STS304/STS304
DRIVER	kW	2.2

ITEM NO.		W14-P-4126 B1/B2
SERVICE		CIF 1'st SLUDGE REMOVAL PUMP
Q'TY		1 + 1
TYPE		CENTRIFUGAL (VVVF), VORTEX
CAPA.	m3/hr.ea x mH	50 x 20 (0.20MPa)
MAT'L		SSC13/SSC19
DRIVER	kW	15

대외비

KEY PLAN (5F)

NOTE

1. BAFFLE 재질 : FRP
2. BAFFLE 상부에 0.02 m2 이상 AIR HOLE 설치.
3. TANK와 HWL 이하로 연결되는 모든 배관은 BLOCK 밸브 설치할 것.
4. 2m 이상 높은 곳에 설치된 밸브는 CHAIN VALVE 또는 PLATFORM 구성할 것.
5. MANHOLE : 2개 이상 설치한다. MANHOLE COVER : FRP
6. CENTRIFUGAL PUMP. MAT'L 표기 : CASING / IMPELLER
7. AGITATOR MAT'L 표기 : SHAFT/BLADE
8. TANK 내 유입시, 육안 확인이 가능하고, 비산이 되지 않도록 하수 깊이로 받형 할 것.
9. 바닥으로부터 100mm 띄어질 것)
10. FRP LINING TANK의 SLEEVE는 SS304 + FRP LINING 적용.
11. Co(OH)2 배관의 ELBOW 부분은 FLANGE 설치할 것.
12. VENDOR에서 결정한다.
13. 라인은 상부에서 시수 주입하도록 설치한다.
14. W14-P-4121 B가 RUN 후 30초 후부터 동작한다.
15. INSTRUMENT VENDOR 선정 후 CONTROL SCHEME 및 CONTROL VALVE INLET / OUTLET NOZZLE SIZE 확정.
16. 구간 투명 PVC 적용. (주입 여부 확인용)
17. FLUSHING 용 WATER / AIR 배관은 45도 사선으로 연결할 것.

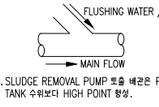

18. SLUDGE REMOVAL PUMP 토출 배관은 PUMP SUCTION 측의 TANK 수위보다 HIGH POINT 형상.
19. SLUDGE PUMP는 TIMER에 의해 운전됨.
20. HIGH POINT에 SIPHON BREAKER 설치할것. (CHECK VALVE의 경우 DUAL PLATE TYPE으로 적용)
21. 소석회 공급 HEADER에서 주입되는 POINT 별 ISOLATION VALVE, ON-OFF VALVE, FLUSHING LINE, SPEC. BREAK 까지 MIN. DISTANCE 적용하여, 막힘 최소화 및 주입배관 교체를 용이하게 한다.
22. XV에 SPEED CONTROLLER (ACCESSORY) 설치.
23. CONCRETE WALL OPENING을 통한 유체 이송 OPENING SIZE IS 800mm x 400mm

REV.	DESCRIPTION	DATE
1A	REVISED AFC	25.08.14
1	REVISED AFC	25.01.17
0	APPROVAL FOR CONSTRUCTION	24.09.30

제 도 DRAWN BY	이 인 학
검 토 CHECKED BY	한 진 희
승 인 APPROVED BY	박 동 영
제 작 사	SK 에코플랜트
공 사 명 PROJECT TITLE	M15X Ph4 WWT Project
도면명 DWG. TITLE	PIPING & INSTRUMENT DIAGRAM CIF 1'st COAGULATION & SETTLING TANK B (2/2)
축 척 SCALE	NONE
날 짜 DATE	2025. 08. 14
PROJECT NO.	22330D
도면번호 SHEET NO.	CJ-M15W14-PR-A20-000109
REV.	1A

C:WUsersWTOPWDesktopWP&ID251013W[M15X Ph-4 for 인허가]CAD FILE_0910WCJ-M15W14-PR-A20-000109 R1 P&ID FOR CIF 1'S

ITEM NO.		W14-T-4127 B
SERVICE		CIF 2'nd NEUTRALIZATION TANK
Q'TY		1
TYPE		RECTANGULAR
SIZE	W x L x H m	(5.75 x 5.625) x 8.15 (EH 6.5)
CAPA.	m3	(263.6 (EH 210.2))
HRT	min	1A (41.6)
MAT'L		P.C + FRP

ITEM NO.		W14-T-4128 B
SERVICE		CIF 2'nd COAGULATION TANK
Q'TY		1
TYPE		RECTANGULAR
SIZE	W x L x H m	(5.75 x 6.5 x 8.15 (EH 6.5))
CAPA.	m3	(304.6 (EH 242.9))
HRT	min	1A (48.1)
MAT'L		P.C + FRP

ITEM NO.		W14-T-4129 B
SERVICE		CIF 2'nd FLOCCULATION TANK
Q'TY		1
TYPE		RECTANGULAR
SIZE	W x L x H m	(5.625 x 6.375) x 8.15 (EH 6.5)
CAPA.	m3	(292.3 (EH 233.1))
HRT	min	1A (46.1)
MAT'L		P.C + FRP

ITEM NO.		W14-T-4130 B
SERVICE		CIF 2'nd SETTLING TANK
Q'TY		1
TYPE		RECTANGULAR
SIZE	W x L x H m	(11.375 x 10.825) x 8.15 (EH 6.5)
CAPA.	m3	(1003.5 (EH 800.4))
HRT	hr	1A 2.6
MAT'L		P.C + FRP

MAKER PACKAGE

ITEM NO.		W14-LP-4130 B
SERVICE		LAMELLAR PLATE
Q'TY		1
CAPA.	W x L x H m	BY VENDOR
SURFACE LOAD		20 m3/m2.d 이하 (Qmax : 6,450m3/d)
MAT'L		ABS+SS304

PAC-509

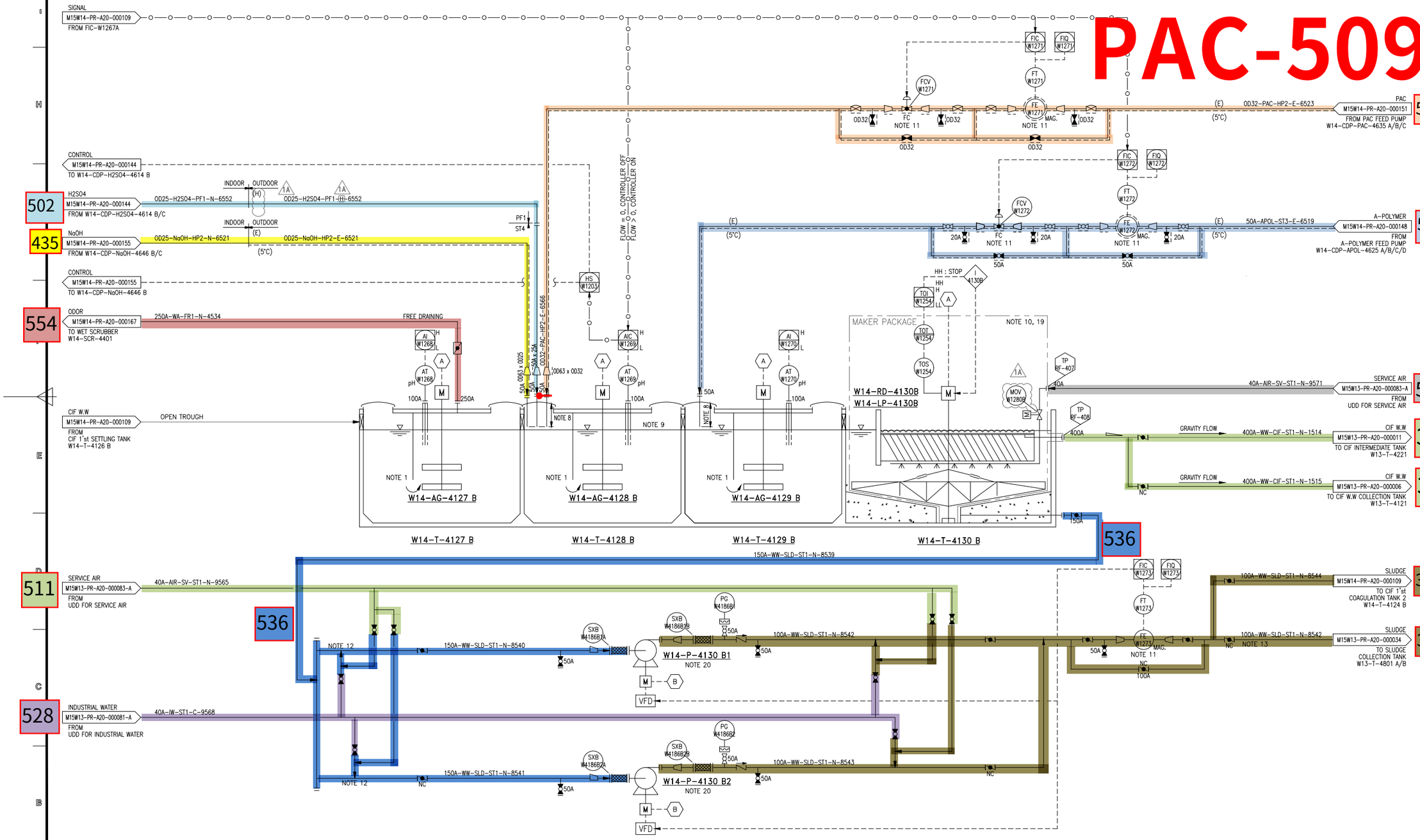

대외비

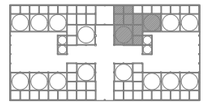

KEY PLAN (5F)

NOTE

1. BAFFLE 재질 : FRP
   BAFFLE 상부에 0.02 m2 이상 AIR HOLE 설치.
2. TANK와 HWL 이하로 연결되는 모든 배관은 BLOCK 밸브 설치할 것.
3. 2m 이상 높은 곳에 설치된 밸브는 CHAIN VALVE 또는 PLATFORM 구성할 것.
4. MANHOLE : 2개 이상 설치한다.
   MANHOLE COVER : FRP
5. 평시 CLOSE 되는 배관에는 LOTO 설치.
6. CENTRIFUGAL PUMP.
   MAT'L 표기 : CASING / IMPELLER
7. AGITATOR MAT'L 표기 : SHAFT/BLADE
8. TANK 내 유입시, 확인 확인이 가능하고, 비산이 되지 않도록 최소 깊이로 반영 할 것.
   (SLAB으로부터 100mm 떨어질 것)
9. 내부 FRP LINING TANK의 SLEEVE는 SUS304 + FRP LINING 적용.
10. 기기 및 것수등의 상세사항은 추후 VENDOR에서 결정한다.
11. INSTRUMENT VENDOR 선정 후 CONTROL SCHEME 및 CONTROL VALVE INLET / OUTLET NOZZLE SIZE 조정.
12. FLUSHING 용 WATER / AIR 배관은 45도 사선으로 연결할 것.

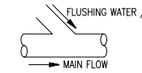

13. SLUDGE REMOVAL PUMP 토출 배관은 PUMP SUCTION 측의 TANK 수위보다 HIGH POINT 형성.
14. DELETED.
15. DELETED.
16. DELETED.
17. DELETED.
18. DELETED.
19. 세정소 및 유지관리시설을 PACKAGE VENDOR 공급범위에 포함할 것.
20. SLUDGE PUMP는 TIMER에 의해 운전됨.
21. DELETED.

1	REVISED AFC	25.08.14
1	REVISED AFC	25.01.17
0	APPROVAL FOR CONSTRUCTION	24.09.30
	설 명 DESCRIPTION	날 짜 DATE

제 도 DRAWN BY	이 인 학
검 토 CHECKED BY	한 진 희
승 인 APPROVED BY	박 동 영
제 작 사	SK 에코플랜트
공 사 명 PROJECT TITLE	M15X Ph4 WWT Project
도면명 DWG. TITLE	PIPING & INSTRUMENT CIAGRAM CIF 2'nd COAGULATION & SETTLING TANK B (2/2)
축 척 SCALE	NONE
날 짜 DATE	2025. 08. 14
PROJECT NO.	22330D
도면번호 SHEET NO.	CJ-M15W14-PR-A20-000110
REV.	1A

ITEM NO.		W14-AG-4127 B
SERVICE		CIF 2'nd NEUTRALIZATION AGITATOR
Q'TY		1
TYPE		HYDRO PADDLE NOTE 15
SPEED	rpm	(30)
MAT'L		STS316L/STS316L
POWER	kW	(15)

ITEM NO.		W14-AG-4128 B
SERVICE		CIF 2'nd COAGULATION AGITATOR
Q'TY		1
TYPE		HYDRO PADDLE NOTE 15
SPEED	rpm	(25)
MAT'L		STS316L/STS316L
POWER	kW	(11)

ITEM NO.		W14-AG-4129 B
SERVICE		CIF 2'nd FLOCCULATION AGITATOR
Q'TY		1
TYPE		HYDRO PADDLE NOTE 15
SPEED	rpm	(25)
MAT'L		STS316L/STS316L
POWER	kW	(7.5)

MAKER PACKAGE

ITEM NO.		W14-RD-4130 B
SERVICE		CIF 2'nd REDUCER DRIVER
Q'TY		1
TYPE		CYCLO REDUCER
CAPA.	m3/d	(0.067)
MAT'L		STS304/STS304
POWER	kW	(2.2)

ITEM NO.		W14-P-4130 B1/B2
SERVICE		CIF 2'nd SLUDGE RETURN PUMP
Q'TY		1 + 1
TYPE		CENTRIFUGAL (WVF), VORTEX
CAPA.	m3/hr.ea x mH	50 x 30 (0.29MPa)
MAT'L		SSC13/SSC19
POWER	kW	(30)

A1(594x841mm ±2mm)

C:WUsersWTOPWDesktopWP&ID251013W[M15X Ph-4 for 인허가]CAD FILE_0910WCJ-M15W14-PR-A20-000110 R1 P&ID FOR CIF 2'

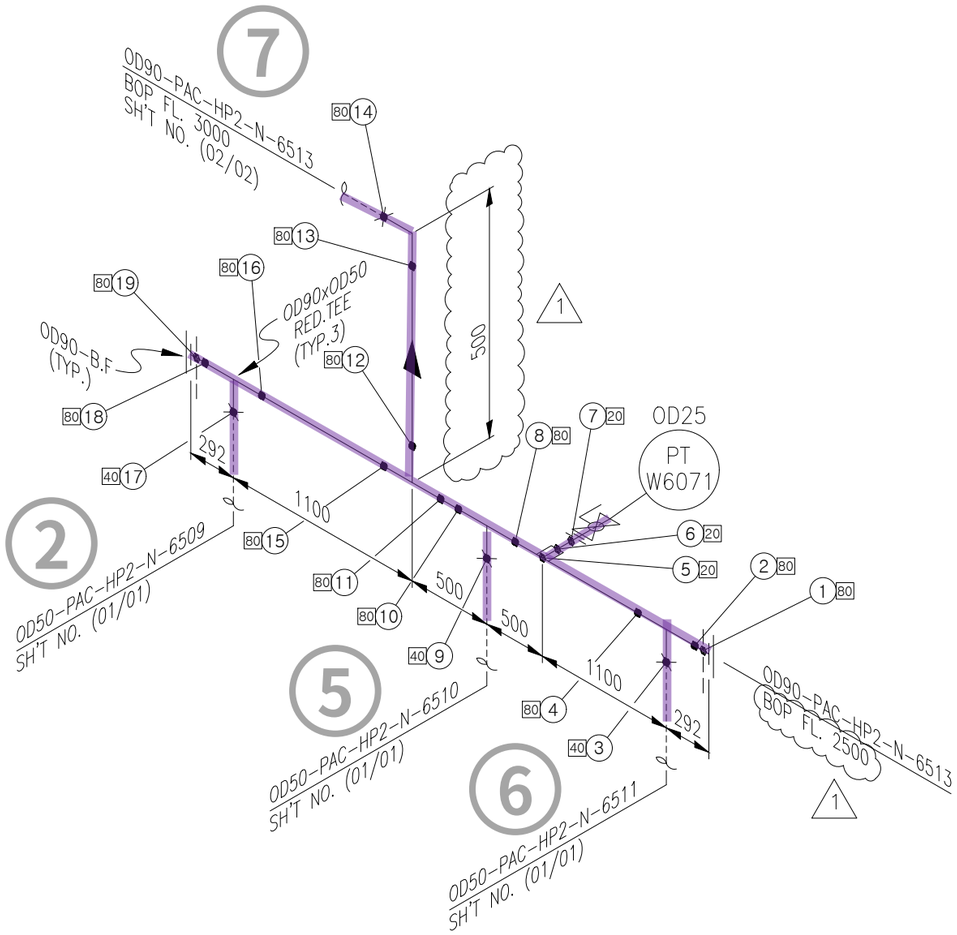

<NOTE>
1. TRAY & ANGLE,CHANNEL SUPPORT가 적용되는
배관 ELEVATION은 현장 맞춤으로 한다.
2. (*) FIELD ADJUST

SK ecoplant

ITEM	SIZE	Q'TY	DESCRIPTION
		HP2	
P	OD90	3.2M	PIPE, HDPE PE100, PE, BUTT FUSION, PN16/SDR11
P	OD25	0.1M	PIPE, HDPE PE100, PE, BUTT FUSION, PN16/SDR11
E90	OD90	1EA	ELBOW 90 DEG, HDPE PE100, PE, BUTT FUSION,
T	OD90	1EA	TEE EQ, HDPE PE100, PE, BUTT FUSION, PN16/SDR11
TR	OD90xOD50	3EA	TEE RED, HDPE PE100, PE, BUTT FUSION X SOCKET FUSION,
			PN16/SDR11
VD	OD25	1EA	DIAPHRAGM VALVE, KS 10K, FF FLG'D, BODY-PP /
			TRIM-EPDM+PTFE DIAPHRAGM, BB, HANDWHEEL
F	OD90	2EA	FLG LAP JOINT / STUB END SET, KS 10K, FF,
			LAP JOINT-STS304 / STUB END-HDPE PE100
F	OD25	1EA	FLG LAP JOINT / STUB END SET, KS 10K, FF,
			LAP JOINT-STS304 / STUB END-HDPE PE100
FB	OD90	2EA	FLG BLIND & LINER SET, KS 10K, FF, BLIND-STS304
			/ LINDER-HDPE PE100 (MIN 5.0MM TH'K)
G	OD25	1EA	GASKET, KS 10K, FF, PTFE+EPDM, 3.0MM TH'K
G2	OD90	2EA	GASKET, KS 10K, FF, PTFE+EPDM, BLIND, 3.0MM TH'K
B1	OD90	2SET	MACHINE BOLT & NYLON NUTS :STS 304 / W WASHERS
B1	OD25	1SET	MACHINE BOLT & NYLON NUTS :STS 304 / W WASHERS
SH	OD90	2EA	SHIELD
SH	OD25	1EA	SHIELD
SD	OD90xOD25	1EA	SADDLE, HDPE PE100, PE, BRANCH-SOCKET FUSION,
			PN16/SDR11

* PIPE : P/P1 * 90° ELBOW : E90 * 45° ELBOW : E45 * TEE : T * RED.TEE : TR * STUB-IN : STU * REINFORCING PAD : RP * CON.RED : RC * ECC.RED : RE * CON.SWAGE : RCS/RCS1 * ECC.SWAGE : RES/RES1 * NIPPLE : NP/NP1/NP2 * CAP : CAP/CAP1 * PLUG : PLG * FULL COUPLING : FC * HALF COUPLING : HF/HF1
* STUB-IN : STU * SOCKET(HDPE/PVC) : SC * SADDLE(HDPE) : SD * FLANGE : F/F1 * GASKET : G/G1/G2 * BOLT & NUT : B/B1 * BLIND FLANGE : FB/FB1 * GATE VA. : VG/VG1/VG2 * BALL VA. : VB/VBL0/VB1/VB1L0/VB2/VB2L0 * BUTTERFLY VA. : VF/VF4 * CHECK VA. : VC/VC1/VC2/VC3/VC4/VC5/VC6/VC7
* GLOBE VA. : VL/VL1/VL2 * DIAPHRAGM VA. : VD/VDL0 * DAMPER : VP * QUICK COUPLING : SQC * FLEXIBLE JOINT(STEEL) : FLXB * FLEXIBLE JOINT(RUBBER) : FLXR * FLEXIBLE JOINT(STEEL_PTFE LINED) : FLXL * FLEXIBLE HOSE : FLXH * STEAM TRAP : ST * SPRAY NOZZLE : SPN * EMERGENCY SHOWER : SSH
* STRAINER(Y-TYPE) : YSTR * STRAINER(T-TYPE) : TSTR * STRAINER(BUCKET-TYPE) : BSTR * ANCHOR PLATE : STOP * BIRD SCREEN : BS * ISOLATION KIT : IK * UNLOADING BOX : UB * AIR TRAP : AT * LOTO : LOTO * SIGHT GLASS : SG * PRESSURE GAUGE : PG * SHILED : SH * SPECIAL BOLT & NUT : BL/BL1

CLIENT SK hynix 1

INSULATION	CODE	N	CONDITION	PRESS. (kg/cm2g)	TEMP. (°C)
	THICK.	–	DESIGN	6.4	60
			OPERATING	4.7	AMB

AREA W14
UNIT 4FA
REF. PLAN DWG. CJ-M15W14-PI-A30-040013-A
REF. P & ID CJ-M15W14-PR-A20-000151

REV. NO.	DATE	DESCRIPTION	BY	CHK	APP'D
1	25.03.31	REVISED AS MARKED	황래종	안남후	박동영
0	25.01.24	APPROVED FOR CONSTRUCTION	황래종	안남후	박동영

CONTRACTOR SK ecoplant
PROJECT NAME M15X Ph4 Project
COMMODITY PAC
JOB NO. 22330D
LINE NO. OD90-PAC-HP2-N-6513
SH'T NO. 01 / 02
REV. 1

경고 : 본 도면은 SK HYNIX의 기업비밀 자료로서, 어떠한 경우에도 목적 외 사용, 복제, 제3자에게 공개, 누설 및 유출할 수 없으며, 회사는 유포자의 불법 사용으로 피해가 발생할 경우 유포자에게 민/형사상 책임을 요구할 수 있음.

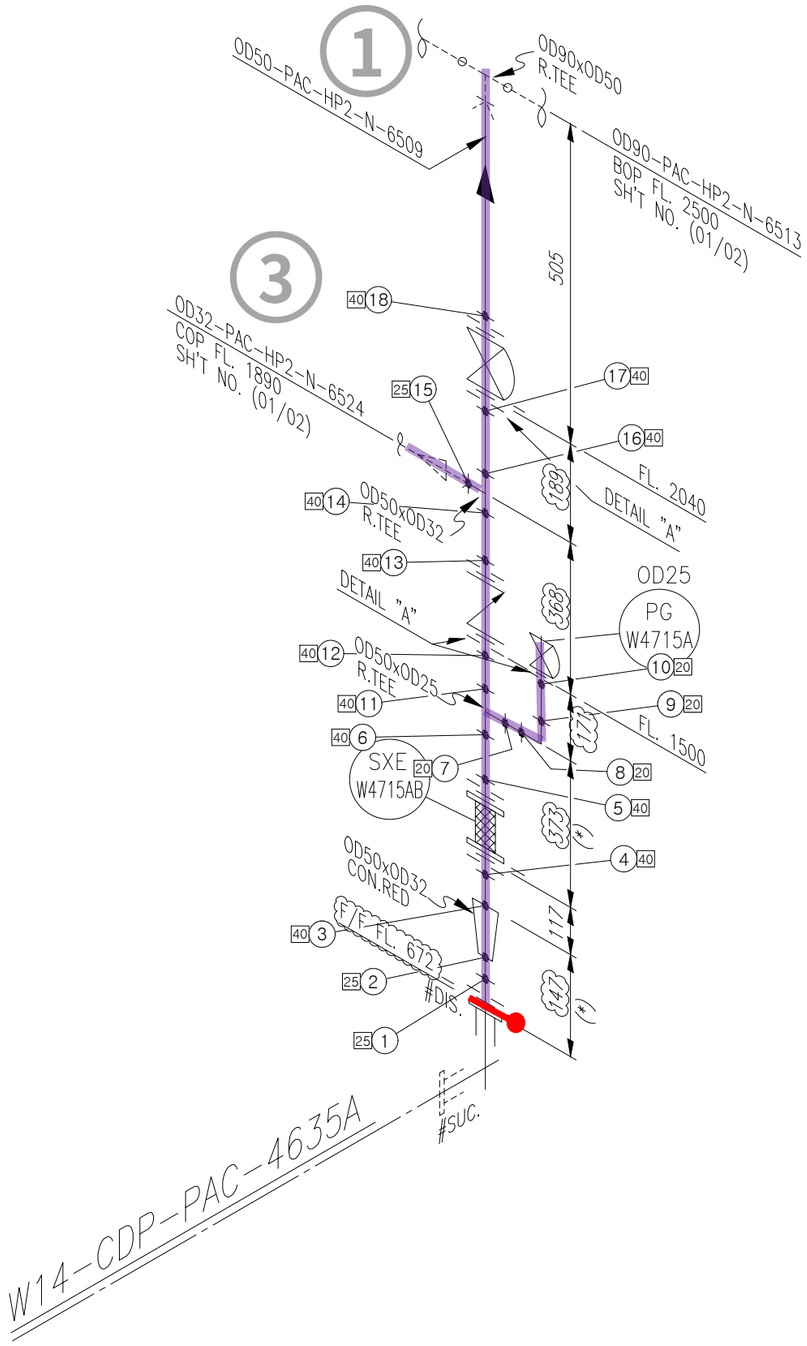

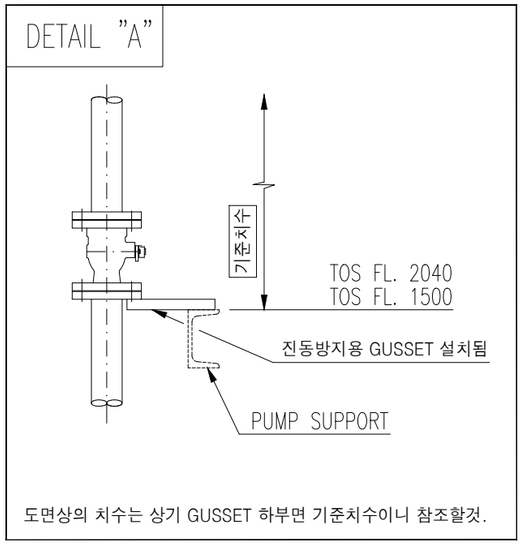

<NOTE>
1. TRAY & ANGLE,CHANNEL SUPPORT가 적용되는 배관 ELEVATION은 현장 맞춤으로 한다.
2. (*) FIELD ADJUST

SK ecoplant

ITEM	SIZE	Q'TY	DESCRIPTION
		HP2	
P	OD50	1.3M	PIPE, HDPE PE100, PE, SOCKET FUSION, PN16/SDR11
P	OD32	0.1M	PIPE, HDPE PE100, PE, SOCKET FUSION, PN16/SDR11
P	OD25	0.2M	PIPE, HDPE PE100, PE, SOCKET FUSION, PN16/SDR11
TR	OD50xOD32	1EA	TEE RED, HDPE PE100, PE, SOCKET FUSION, PN16/SDR11
TR	OD50xOD25	1EA	TEE RED, HDPE PE100, PE, SOCKET FUSION, PN16/SDR11
RC	OD50xOD32	1EA	REDUCER CON, HDPE PE100, PE, SOCKET FUSION,
			PN16/SDR11
VC	OD50	1EA	CHECK VALVE, KS 10K, FF FLG'D, BODY-PP
			/ TRIM-PP, TRUE UNION, BALL
VD	OD50	1EA	DIAPHRAGM VALVE, KS 10K, FF FLG'D, BODY-PP /
			TRIM-EPDM+PTFE DIAPHRAGM, BB, HANDWHEEL
VD	OD25	1EA	DIAPHRAGM VALVE, KS 10K, FF FLG'D, BODY-PP /
			TRIM-EPDM+PTFE DIAPHRAGM, BB, HANDWHEEL
F	OD50	6EA	FLG LAP JOINT / STUB END SET, KS 10K, FF,
			LAP JOINT-STS304 / STUB END-HDPE PE100
F	OD32	1EA	FLG LAP JOINT / STUB END SET, KS 10K, FF,
			LAP JOINT-STS304 / STUB END-HDPE PE100
F	OD25	1EA	FLG LAP JOINT / STUB END SET, KS 10K, FF,
			LAP JOINT-STS304 / STUB END-HDPE PE100
G	OD50	6EA	GASKET, KS 10K, FF, PTFE+EPDM, 3.0MM TH'K
G	OD32	1EA	GASKET, KS 10K, FF, PTFE+EPDM, 3.0MM TH'K
G	OD25	1EA	GASKET, KS 10K, FF, PTFE+EPDM, 3.0MM TH'K
B1	OD50	6SET	MACHINE BOLT & NYLON NUTS :STS 304 / W WASHERS
B1	OD32	1SET	MACHINE BOLT & NYLON NUTS :STS 304 / W WASHERS
B1	OD25	1SET	MACHINE BOLT & NYLON NUTS :STS 304 / W WASHERS
FLXR	OD50	1EA	FLEXIBLE JOINT(TPC RUBBER TYPE)
SH	OD50	6EA	SHIELD
SH	OD32	1EA	SHIELD
SH	OD25	2EA	SHIELD
PG	OD25	1EA	PRESSURE GAUGE, KS 10K, FF

* PIPE : P/P1 * 90° ELBOW : E90 * 45° ELBOW : E45 * TEE : T * RED.TEE : TR * STUB-IN : STU * REINFORCING PAD : RP * CON.RED : RC * ECC.RED : RE * CON.SWAGE : RCS/RCS1 * ECC.SWAGE : RES/RES1 * NIPPLE : NP/NP1/NP2 * CAP : CAP/CAP1 * PLUG : PLG * FULL COUPLING : FC * HALF COUPLING : HF/HF1
* STUB-IN : STU * SOCKET(HDPE/PVC) : SC * SADDLE(HDPE) : SD * FLANGE : F/F1 * GASKET : G/G1/G2 * BOLT & NUT : B/B1 * BLIND FLANGE : FB/FB1 * GATE VA. : VG/VG1/VG2 * BALL VA. : VB/VBLO/VB1/VB1LO/VB2/VB2LO * BUTTERFLY VA. : VF/VF4 * CHECK VA. : VC/VC1/VC2/VC3/VC4/VC5/VC6/VC7
* GLOBE VA. : VL/VL1/VL2 * DIAPHRAGM VA. : VD/VDLO * DAMPER : VP * QUICK COUPLING : SQC * FLEXIBLE JOINT(STEEL) : FLXB * FLEXIBLE JOINT(RUBBER) : FLXR * FLEXIBLE JOINT(STEEL_PTFE LINED) : FLXL * FLEXIBLE HOSE : FLXH * STEAM TRAP : ST * SPRAY NOZZLE : SPN * EMERGENCY SHOWER : SSH
* STRAINER(Y-TYPE) : YSTR * STRAINER(T-TYPE) : TSTR * STRAINER(BUCKET-TYPE) : BSTR * ANCHOR PLATE : STOP * BIRD SCREEN : BS * ISOLATION KIT : IK * UNLOADING BOX : UB * AIR TRAP : AT * LOTO : LOTO * SIGHT GLASS : SG * PRESSURE GAUGE : PG * SHILED : SH * SPECIAL BOLT & NUT : BL/BL1

CLIENT SK hynix ②

INSULATION	CODE	N	CONDITION	PRESS. (kg/cm2g)	TEMP. (°C)
	THICK.	–	DESIGN	6.4	60
			OPERATING	4.7	AMB

AREA W14
UNIT 4FA
REF. PLAN DWG. CJ-M15W14-PI-A30-040013-A
REF. P & ID CJ-M15W14-PR-A20-000151

REV. NO.	DATE	DESCRIPTION	BY	CHK	APP'D
1	25.03.31	REVISED AS MARKED	황래종	안남후	박동영
0	25.01.24	APPROVED FOR CONSTRUCTION	황래종	안남후	박동영

CONTRACTOR SK ecoplant
PROJECT NAME M15X Ph4 Project
COMMODITY PAC
JOB NO. 22330D
LINE NO. OD50-PAC-HP2-N-6509
SH'T NO. 01 / 01
REV. 1

경고 : 본 도면은 SK HYNIX의 기업비밀 자료로서, 어떠한 경우에도 목적 외 사용, 복제, 제3자에게 공개, 누설 및 유출할 수 없으며, 회사는 유포자의 불법 사용으로 피해가 발생할 경우 유포자에게 민/형사상 책임을 요구할 수 있음.

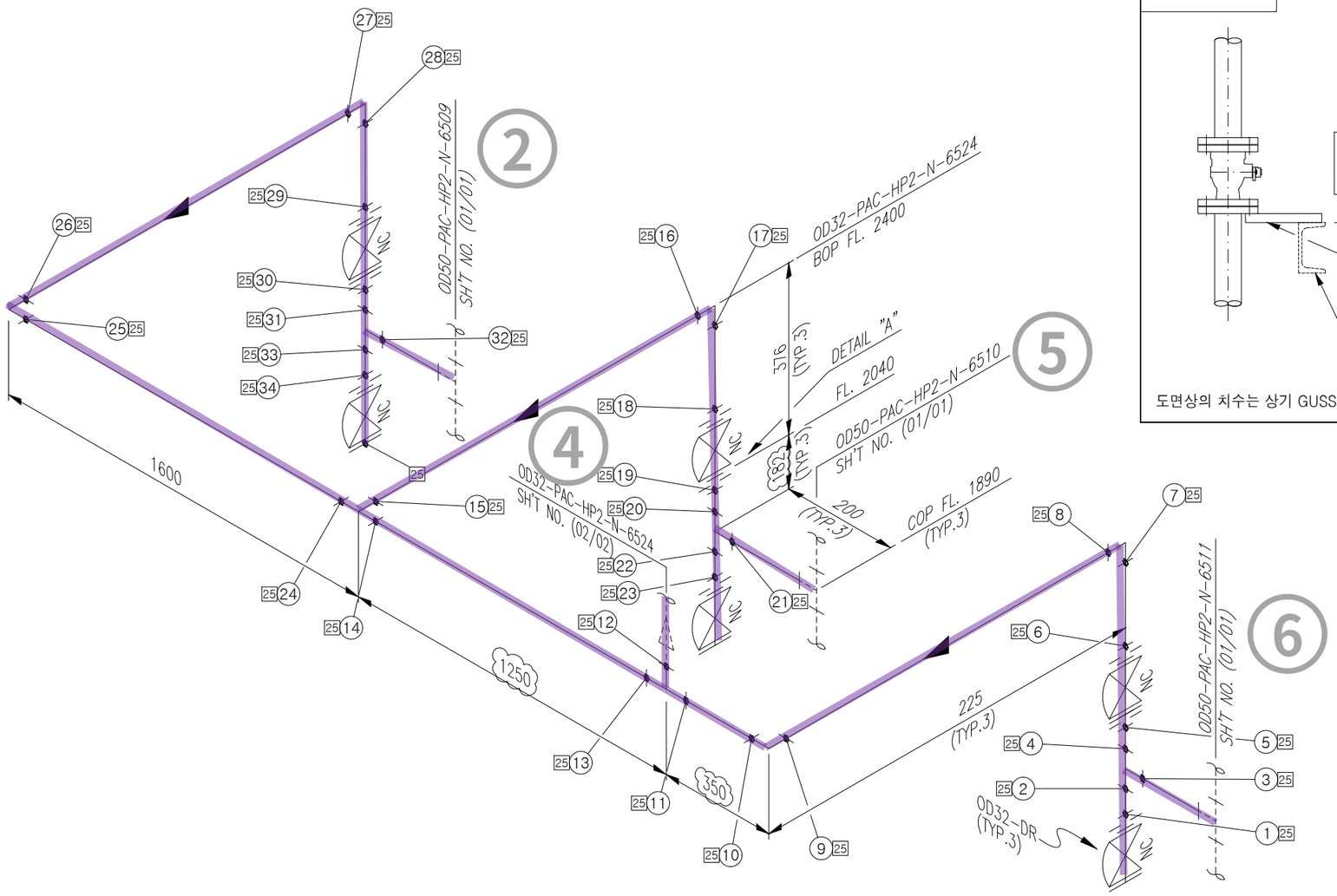

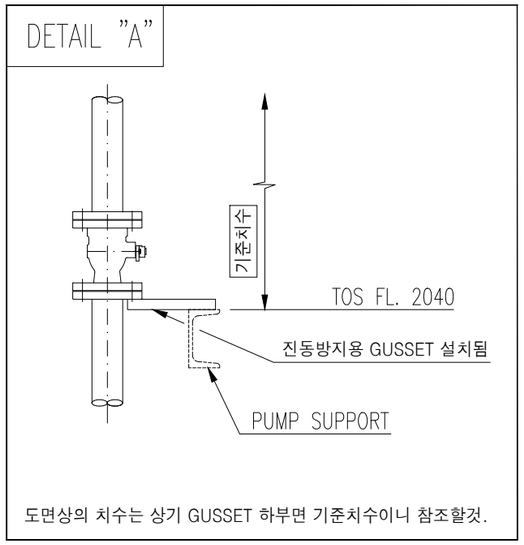

<NOTE>
1. TRAY & ANGLE,CHANNEL SUPPORT가 적용되는 배관 ELEVATION은 현장 맞춤으로 한다.
2. (*) FIELD ADJUST

ITEM	SIZE	Q'TY	DESCRIPTION
		HP2	
P	OD32	6.4M	PIPE, HDPE PE100, PE, SOCKET FUSION, PN16/SDR11
E90	OD32	5EA	ELBOW 90 DEG, HDPE PE100, PE, SOCKET FUSION,
			PN16/SDR11
T	OD32	5EA	TEE EQUAL, HDPE PE100, PE, SOCKET FUSION, PN16/SDR11
VD	OD32	6EA	DIAPHRAGM VALVE, KS 10K, FF FLG'D, BODY-PP /
			TRIM-EPDM+PTFE DIAPHRAGM, BB, HANDWHEEL
F	OD32	9EA	FLG LAP JOINT / STUB END SET, KS 10K, FF,
			LAP JOINT-STS304 / STUB END-HDPE PE100
FB	OD32	3EA	FLG BLIND & LINER SET, KS 10K, FF, BLIND-STS304
			/ LINDER-HDPE PE100 (MIN 5.0MM TH'K)
G	OD32	9EA	GASKET, KS 10K, FF, PTFE+EPDM, 3.0MM TH'K
G2	OD32	3EA	GASKET, KS 10K, FF, PTFE+EPDM, BLIND, 3.0MM TH'K
B1	OD32	12SET	MACHINE BOLT & NYLON NUTS :STS 304 / W WASHERS
SH	OD32	12EA	SHIELD
LOTO	OD32	6EA	LOTO

* PIPE : P/P1 * 90° ELBOW : E90 * 45° ELBOW : E45 * TEE : T * RED.TEE : TR * STUB-IN : STU * REINFORCING PAD : RP * CON.RED : RC * ECC.RED : RE * CON.SWAGE : RCS/RCS1 * ECC.SWAGE : RES/RES1 * NIPPLE : NP/NP1/NP2 * CAP : CAP/CAP1 * PLUG : PLG * FULL COUPLING : FC * HALF COUPLING : HF/HF1
* STUB-IN : STU * SOCKET(HDPE/PVC) : SC * SADDLE(HDPE) : SD * FLANGE : F/F1 * GASKET : G/G1/G2 * BOLT & NUT : B/B1 * BLIND FLANGE : FB/FB1 * GATE VA. : VG/VG1/VG2 * BALL VA. : VB/VBLO/VB1/VB1LO/VB2/VB2LO * BUTTERFLY VA. : VF/VF4 * CHECK VA. : VC/VC1/VC2/VC3/VC4/VC5/VC6/VC7
* GLOBE VA. : VL/VL1/VL2 * DIAPHRAGM VA. : VD/VDLO * DAMPER : VP * QUICK COUPLING : SQC * FLEXIBLE JOINT(STEEL) : FLXB * FLEXIBLE JOINT(RUBBER) : FLXR * FLEXIBLE JOINT(STEEL_PTFE LINED) : FLXL * FLEXIBLE HOSE : FLXH * STEAM TRAP : ST * SPRAY NOZZLE : SPN * EMERGENCY SHOWER : SSH
* STRAINER(Y-TYPE) : YSTR * STRAINER(T-TYPE) : TSTR * STRAINER(BUCKET-TYPE) : BSTR * ANCHOR PLATE : STOP * BIRD SCREEN : BS * ISOLATION KIT : IK * UNLOADING BOX : UB * AIR TRAP : AT * LOTO : LOTO * SIGHT GLASS : SG * PRESSURE GAUGE : PG * SHILED : SH * SPECIAL BOLT & NUT : BL/BL1

CLIENT SK hynix 3

INSULATION	CODE	N	CONDITION	PRESS. (kg/cm2g)	TEMP. (°C)
	THICK.	–	DESIGN	1	60
			OPERATING	ATM	AMB

AREA W14
UNIT 4FA
REF. PLAN DWG. CJ-M15W14-PI-A30-04008-A
REF. P & ID CJ-M15W14-PR-A20-000151

REV. NO.	DATE	DESCRIPTION	BY	CHK	APP'D
1	25.03.31	REVISED AS MARKED	황래종	안남후	박동영
0	25.01.24	APPROVED FOR CONSTRUCTION	황래종	안남후	박동영

CONTRACTOR SK ecoplant
COMMODITY PAC
LINE NO. OD32-PAC-HP2-N-6524
PROJECT NAME M15X Ph4 Project
JOB NO. 22330D
SH'T NO. 01 / 02
REV. 1

경고 : 본 도면은 SK HYNIX의 기업비밀 자료로서, 어떠한 경우에도 목적 외 사용, 복제, 제3자에게 공개, 누설 및 유출할 수 없으며, 회사는 유포자의 불법 사용으로 피해가 발생할 경우 유포자에게 민/형사상 책임을 요구할 수 있음.

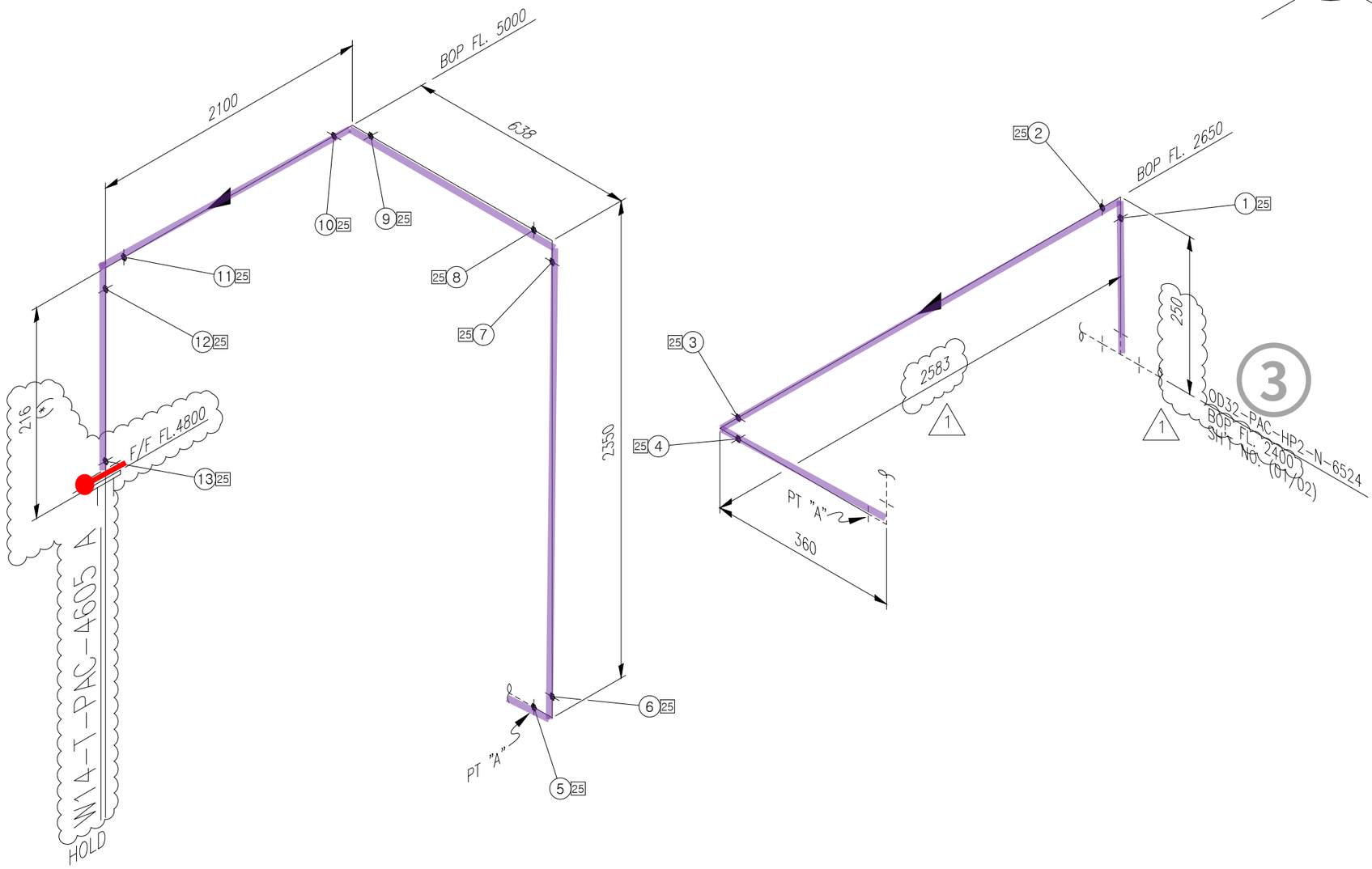

ITEM	SIZE	Q'TY	DESCRIPTION
		HP2	
P	OD32	8.1M	PIPE, HDPE PE100, PE, SOCKET FUSION, PN16/SDR11
E90	OD32	6EA	ELBOW 90 DEG, HDPE PE100, PE, SOCKET FUSION,
			PN16/SDR11
F	OD32	1EA	FLG LAP JOINT / STUB END SET, KS 10K, FF,
			LAP JOINT-STS304 / STUB END-HDPE PE100
G	OD32	1EA	GASKET, KS 10K, FF, PTFE+EPDM, 3.0MM TH'K
B1	OD32	1SET	MACHINE BOLT & NYLON NUTS :STS 304 / W WASHERS
SH	OD32	1EA	SHIELD

<NOTE>
1. TRAY & ANGLE,CHANNEL SUPPORT가 적용되는 배관 ELEVATION은 현장 맞춤으로 한다.
2. (*) FIELD ADJUST

* PIPE : P/P1 * 90° ELBOW : E90 * 45° ELBOW : E45 * TEE : T * RED.TEE : TR * STUB-IN : STU * REINFORCING PAD : RP * CON.RED : RC * ECC.RED : RE * CON.SWAGE : RCS/RCS1 * ECC.SWAGE : RES/RES1 * NIPPLE : NP/NP1/NP2 * CAP : CAP/CAP1 * PLUG : PLG * FULL COUPLING : FC * HALF COUPLING : HF/HF1
* STUB-IN : STU * SOCKET(HDPE/PVC) : SC * SADDLE(HDPE) : SD * FLANGE : F/F1 * GASKET : G/G1/G2 * BOLT & NUT : B/B1 * BLIND FLANGE : FB/FB1 * GATE VA. : VG/VG1/VG2 * BALL VA. : VB/VBLO/VB1/VB1LO/VB2/VB2LO * BUTTERFLY VA. : VF/VF4 * CHECK VA. : VC/VC1/VC2/VC3/VC4/VC5/VC6/VC7
* GLOBE VA. : VL/VL1/VL2 * DIAPHRAGM VA. : VD/VDLO * DAMPER : VP * QUICK COUPLING : SQC * FLEXIBLE JOINT(STEEL) : FLXB * FLEXIBLE JOINT(RUBBER) : FLXR * FLEXIBLE JOINT(STEEL_PTFE LINED) : FLXL * FLEXIBLE HOSE : FLXH * STEAM TRAP : ST * SPRAY NOZZLE : SPN * EMERGENCY SHOWER : SSH
* STRAINER(Y-TYPE) : YSTR * STRAINER(T-TYPE) : TSTR * STRAINER(BUCKET-TYPE) : BSTR * ANCHOR PLATE : STOP * BIRD SCREEN : BS * ISOLATION KIT : IK * UNLOADING BOX : UB * AIR TRAP : AT * LOTO : LOTO * SIGHT GLASS : SG * PRESSURE GAUGE : PG * SHILED : SH * SPECIAL BOLT & NUT : BL/BL1

INSULATION	CODE	N	CONDITION	PRESS. (kg/cm2g)	TEMP. (°C)
	THICK.	–	DESIGN	1	60
			OPERATING	ATM	AMB

AREA	W14
UNIT	4FA
REF. PLAN DWG.	CJ-M15W14-PI-A30-04008-A
REF. P & ID	CJ-M15W14-PR-A20-000151

REV. NO.	DATE	DESCRIPTION	BY	CHK	APP'D
1	25.03.31	REVISED AS MARKED	황래종	안남후	박동영
0	25.01.24	APPROVED FOR CONSTRUCTION	황래종	안남후	박동영

CLIENT: SK hynix

CONTRACTOR: SK ecoplant

PROJECT NAME: M15X Ph4 Project

COMMODITY: PAC

JOB NO.: 22330D

LINE NO.: OD32-PAC-HP2-N-6524

SH'T NO.: 02 / 02

REV.: 1

경고 : 본 도면은 SK HYNIX의 기업비밀 자료로서, 어떠한 경우에도 목적 외 사용, 복제, 제3자에게 공개, 누설 및 유출할 수 없으며, 회사는 유포자의 불법 사용으로 피해가 발생할 경우 유포자에게 민/형사상 책임을 요구할 수 있음.

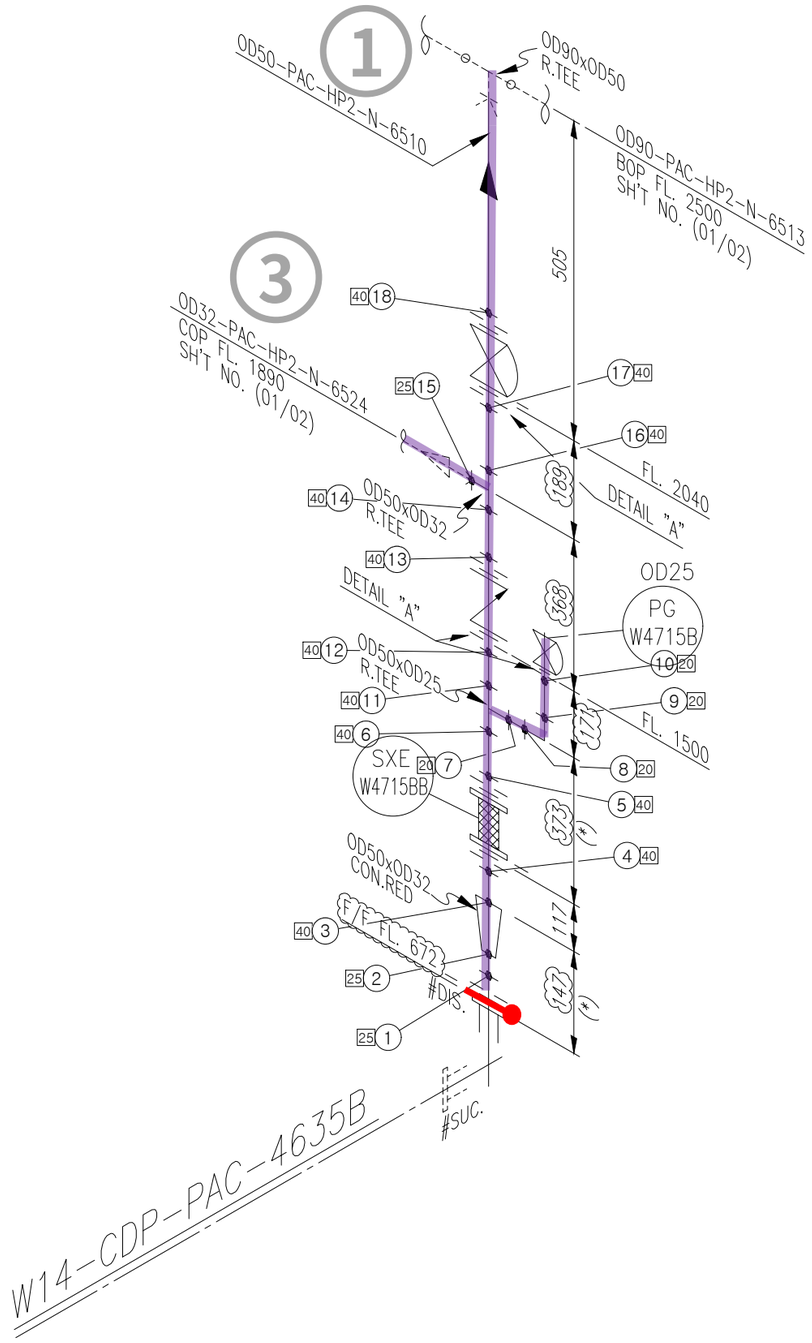

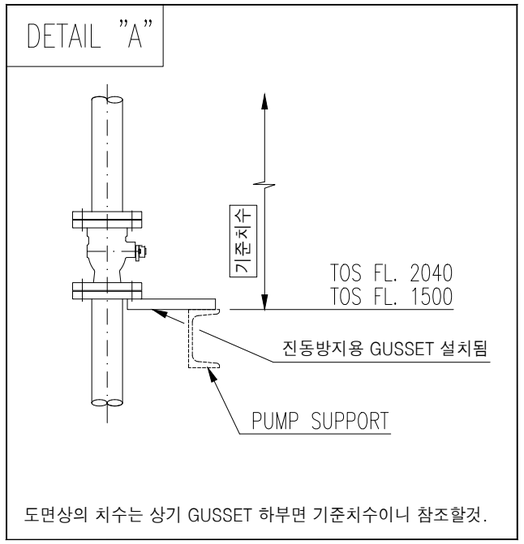

<NOTE>
1. TRAY & ANGLE,CHANNEL SUPPORT가 적용되는 배관 ELEVATION은 현장 맞춤으로 한다.
2. (*) FIELD ADJUST

SK ecoplant

ITEM	SIZE	Q'TY	DESCRIPTION
		HP2	
P	OD50	1.3M	PIPE, HDPE PE100, PE, SOCKET FUSION, PN16/SDR11
P	OD32	0.1M	PIPE, HDPE PE100, PE, SOCKET FUSION, PN16/SDR11
P	OD25	0.2M	PIPE, HDPE PE100, PE, SOCKET FUSION, PN16/SDR11
TR	OD50xOD32	1EA	TEE RED, HDPE PE100, PE, SOCKET FUSION, PN16/SDR11
TR	OD50xOD25	1EA	TEE RED, HDPE PE100, PE, SOCKET FUSION, PN16/SDR11
RC	OD50xOD32	1EA	REDUCER CON, HDPE PE100, PE, SOCKET FUSION,
			PN16/SDR11
VC	OD50	1EA	CHECK VALVE, KS 10K, FF FLG'D, BODY-PP
			/ TRIM-PP, TRUE UNION, BALL
VD	OD50	1EA	DIAPHRAGM VALVE, KS 10K, FF FLG'D, BODY-PP /
			TRIM-EPDM+PTFE DIAPHRAGM, BB, HANDWHEEL
VD	OD25	1EA	DIAPHRAGM VALVE, KS 10K, FF FLG'D, BODY-PP /
			TRIM-EPDM+PTFE DIAPHRAGM, BB, HANDWHEEL
F	OD50	6EA	FLG LAP JOINT / STUB END SET, KS 10K, FF,
			LAP JOINT-STS304 / STUB END-HDPE PE100
F	OD32	1EA	FLG LAP JOINT / STUB END SET, KS 10K, FF,
			LAP JOINT-STS304 / STUB END-HDPE PE100
F	OD25	1EA	FLG LAP JOINT / STUB END SET, KS 10K, FF,
			LAP JOINT-STS304 / STUB END-HDPE PE100
G	OD50	6EA	GASKET, KS 10K, FF, PTFE+EPDM, 3.0MM TH'K
G	OD32	1EA	GASKET, KS 10K, FF, PTFE+EPDM, 3.0MM TH'K
G	OD25	1EA	GASKET, KS 10K, FF, PTFE+EPDM, 3.0MM TH'K
B1	OD50	6SET	MACHINE BOLT & NYLON NUTS :STS 304 / W WASHERS
B1	OD32	1SET	MACHINE BOLT & NYLON NUTS :STS 304 / W WASHERS
B1	OD25	1SET	MACHINE BOLT & NYLON NUTS :STS 304 / W WASHERS
FLXR	OD50	1EA	FLEXIBLE JOINT(TPC RUBBER TYPE)
SH	OD50	6EA	SHIELD
SH	OD32	1EA	SHIELD
SH	OD25	2EA	SHIELD
PG	OD25	1EA	PRESSURE GAUGE, KS 10K, FF

* PIPE : P/P1 * 90° ELBOW : E90 * 45° ELBOW : E45 * TEE : T * RED.TEE : TR * STUB-IN : STU * REINFORCING PAD : RP * CON.RED : RC * ECC.RED : RE * CON.SWAGE : RCS/RCS1 * ECC.SWAGE : RES/RES1 * NIPPLE : NP/NP1/NP2 * CAP : CAP/CAP1 * PLUG : PLG * FULL COUPLING : FC * HALF COUPLING : HF/HF1
* STUB-IN : STU * SOCKET(HDPE/PVC) : SC * SADDLE(HDPE) : SD * FLANGE : F/F1 * GASKET : G/G1/G2 * BOLT & NUT : B/B1 * BLIND FLANGE : FB/FB1 * GATE VA. : VG/VG1/VG2 * BALL VA. : VB/VBLO/VB1/VB1LO/VB2/VB2LO * BUTTERFLY VA. : VF/VF4 * CHECK VA. : VC/VC1/VC2/VC3/VC4/VC5/VC6/VC7
* GLOBE VA. : VL/VL1/VL2 * DIAPHRAGM VA. : VD/VDLO * DAMPER : VP * QUICK COUPLING : SQC * FLEXIBLE JOINT(STEEL) : FLXB * FLEXIBLE JOINT(RUBBER) : FLXR * FLEXIBLE JOINT(STEEL_PTFE LINED) : FLXL * FLEXIBLE HOSE : FLXH * STEAM TRAP : ST * SPRAY NOZZLE : SPN * EMERGENCY SHOWER : SSH
* STRAINER(Y-TYPE) : YSTR * STRAINER(T-TYPE) : TSTR * STRAINER(BUCKET-TYPE) : BSTR * ANCHOR PLATE : STOP * BIRD SCREEN : BS * ISOLATION KIT : IK * UNLOADING BOX : UB * AIR TRAP : AT * LOTO : LOTO * SIGHT GLASS : SG * PRESSURE GAUGE : PG * SHILED : SH * SPECIAL BOLT & NUT : BL/BL1

CLIENT SK hynix

5

INSULATION	CODE	N	CONDITION	PRESS. (kg/cm2g)	TEMP. (°C)
	THICK.	–	DESIGN	6.4	60
			OPERATING	4.7	AMB

AREA W14
UNIT 4FA
REF. PLAN DWG. CJ-M15W14-PI-A30-040013-A
REF. P & ID CJ-M15W14-PR-A20-000151

REV. NO.	DATE	DESCRIPTION	BY	CHK	APP'D
1	25.03.31	REVISED AS MARKED	황래종	안남후	박동영
0	25.01.24	APPROVED FOR CONSTRUCTION	황래종	안남후	박동영

CONTRACTOR SK ecoplant
PROJECT NAME M15X Ph4 Project
COMMODITY PAC
JOB NO. 22330D
LINE NO. 0D50-PAC-HP2-N-6510
SH'T NO. 01 / 01
REV. 1

경고 : 본 도면은 SK HYNIX의 기업비밀 자료로서, 어떠한 경우에도 목적 외 사용, 복제, 제3자에게 공개, 누설 및 유출할 수 없으며, 회사는 유포자의 불법 사용으로 피해가 발생할 경우 유포자에게 민/형사상 책임을 요구할 수 있음.

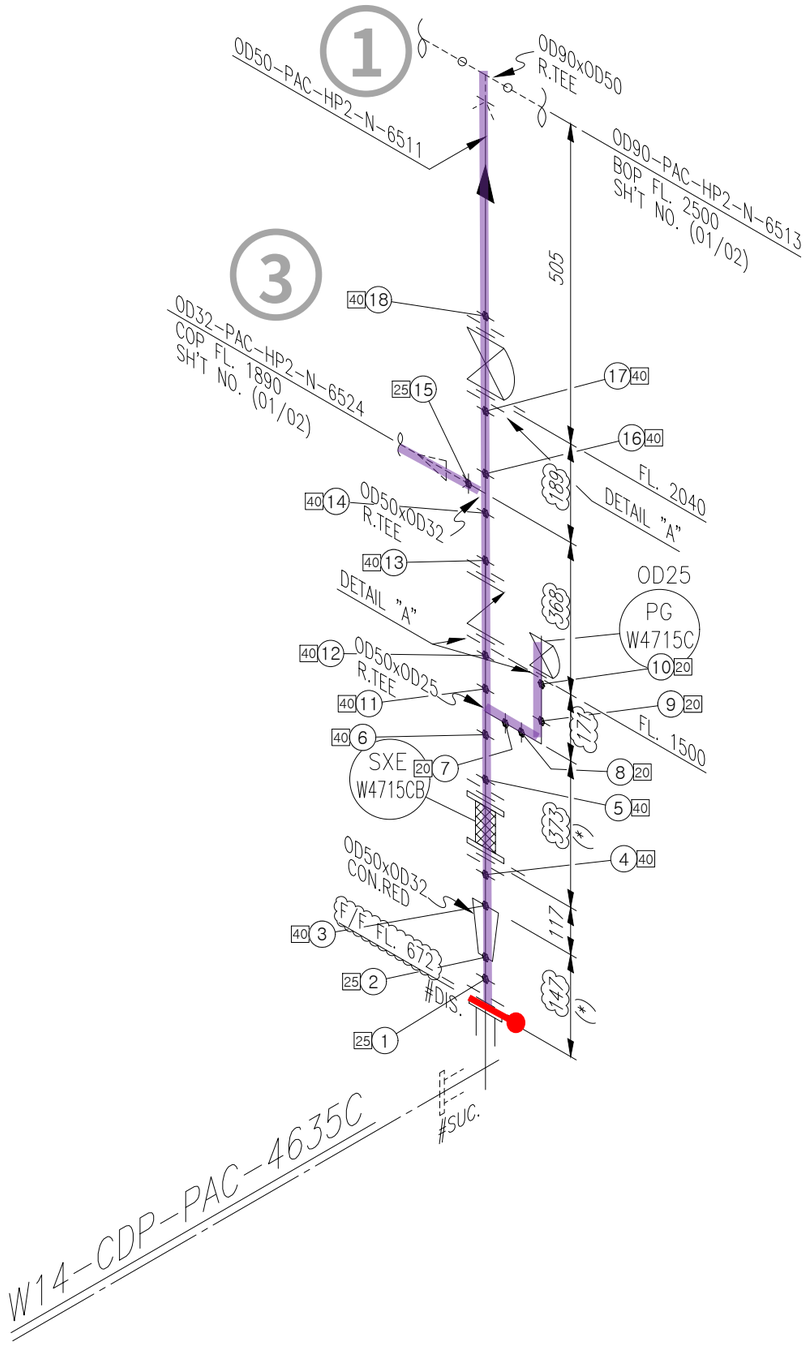

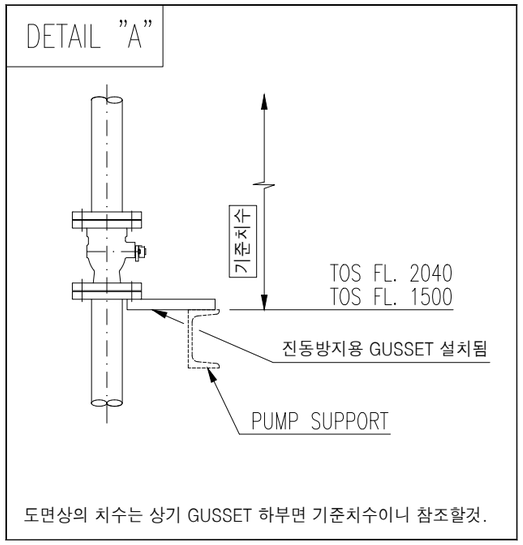

<NOTE>
1. TRAY & ANGLE,CHANNEL SUPPORT가 적용되는 배관 ELEVATION은 현장 맞춤으로 한다.
2. (*) FIELD ADJUST

SK ecoplant

ITEM	SIZE	Q'TY	DESCRIPTION
		HP2	
P	OD50	1.3M	PIPE, HDPE PE100, PE, SOCKET FUSION, PN16/SDR11
P	OD32	0.1M	PIPE, HDPE PE100, PE, SOCKET FUSION, PN16/SDR11
P	OD25	0.2M	PIPE, HDPE PE100, PE, SOCKET FUSION, PN16/SDR11
TR	OD50xOD32	1EA	TEE RED, HDPE PE100, PE, SOCKET FUSION, PN16/SDR11
TR	OD50xOD25	1EA	TEE RED, HDPE PE100, PE, SOCKET FUSION, PN16/SDR11
RC	OD50xOD32	1EA	REDUCER CON, HDPE PE100, PE, SOCKET FUSION,
			PN16/SDR11
VC	OD50	1EA	CHECK VALVE, KS 10K, FF FLG'D, BODY-PP
			/ TRIM-PP, TRUE UNION, BALL
VD	OD50	1EA	DIAPHRAGM VALVE, KS 10K, FF FLG'D, BODY-PP /
			TRIM-EPDM+PTFE DIAPHRAGM, BB, HANDWHEEL
VD	OD25	1EA	DIAPHRAGM VALVE, KS 10K, FF FLG'D, BODY-PP /
			TRIM-EPDM+PTFE DIAPHRAGM, BB, HANDWHEEL
F	OD50	6EA	FLG LAP JOINT / STUB END SET, KS 10K, FF,
			LAP JOINT-STS304 / STUB END-HDPE PE100
F	OD32	1EA	FLG LAP JOINT / STUB END SET, KS 10K, FF,
			LAP JOINT-STS304 / STUB END-HDPE PE100
F	OD25	1EA	FLG LAP JOINT / STUB END SET, KS 10K, FF,
			LAP JOINT-STS304 / STUB END-HDPE PE100
G	OD50	6EA	GASKET, KS 10K, FF, PTFE+EPDM, 3.0MM TH'K
G	OD32	1EA	GASKET, KS 10K, FF, PTFE+EPDM, 3.0MM TH'K
G	OD25	1EA	GASKET, KS 10K, FF, PTFE+EPDM, 3.0MM TH'K
B1	OD50	6SET	MACHINE BOLT & NYLON NUTS :STS 304 / W WASHERS
B1	OD32	1SET	MACHINE BOLT & NYLON NUTS :STS 304 / W WASHERS
B1	OD25	1SET	MACHINE BOLT & NYLON NUTS :STS 304 / W WASHERS
FLXR	OD50	1EA	FLEXIBLE JOINT(TPC RUBBER TYPE)
SH	OD50	6EA	SHIELD
SH	OD32	1EA	SHIELD
SH	OD25	2EA	SHIELD
PG	OD25	1EA	PRESSURE GAUGE, KS 10K, FF

* PIPE : P/P1 * 90° ELBOW : E90 * 45° ELBOW : E45 * TEE : T * RED.TEE : TR * STUB-IN : STU * REINFORCING PAD : RP * CON.RED : RC * ECC.RED : RE * CON.SWAGE : RCS/RCS1 * ECC.SWAGE : RES/RES1 * NIPPLE : NP/NP1/NP2 * CAP : CAP/CAP1 * PLUG : PLG * FULL COUPLING : FC * HALF COUPLING : HF/HF1
* STUB-IN : STU * SOCKET(HDPE/PVC) : SC * SADDLE(HDPE) : SD * FLANGE : F/F1 * GASKET : G/G1/G2 * BOLT & NUT : B/B1 * BLIND FLANGE : FB/FB1 * GATE VA. : VG/VG1/VG2 * BALL VA. : VB/VBLO/VB1/VB1LO/VB2/VB2LO * BUTTERFLY VA. : VF/VF4 * CHECK VA. : VC/VC1/VC2/VC3/VC4/VC5/VC6/VC7
* GLOBE VA. : VL/VL1/VL2 * DIAPHRAGM VA. : VD/VDLO * DAMPER : VP * QUICK COUPLING : SQC * FLEXIBLE JOINT(STEEL) : FLXB * FLEXIBLE JOINT(RUBBER) : FLXR * FLEXIBLE JOINT(STEEL_PTFE LINED) : FLXL * FLEXIBLE HOSE : FLXH * STEAM TRAP : ST * SPRAY NOZZLE : SPN * EMERGENCY SHOWER : SSH
* STRAINER(Y-TYPE) : YSTR * STRAINER(T-TYPE) : TSTR * STRAINER(BUCKET-TYPE) : BSTR * ANCHOR PLATE : STOP * BIRD SCREEN : BS * ISOLATION KIT : IK * UNLOADING BOX : UB * AIR TRAP : AT * LOTO : LOTO * SIGHT GLASS : SG * PRESSURE GAUGE : PG * SHILED : SH * SPECIAL BOLT & NUT : BL/BL1

CLIENT SK hynix

6

INSULATION	CODE	N	CONDITION	PRESS. (kg/cm2g)	TEMP. (°C)
	THICK.	–	DESIGN	6.4	60
			OPERATING	4.7	AMB

AREA W14
UNIT 4FA
REF. PLAN DWG. CJ-M15W14-PI-A30-040013-A
REF. P & ID CJ-M15W14-PR-A20-000151

REV. NO.	DATE	DESCRIPTION	BY	CHK	APP'D
1	25.03.31	REVISED AS MARKED	황래종	안남후	박동영
0	25.01.24	APPROVED FOR CONSTRUCTION	황래종	안남후	박동영

CONTRACTOR SK ecoplant
PROJECT NAME M15X Ph4 Project
COMMODITY PAC
JOB NO. 22330D
LINE NO. 0D50-PAC-HP2-N-6511
SH'T NO. 01 / 01
REV. 1

경고 : 본 도면은 SK HYNIX의 기업비밀 자료로서, 어떠한 경우에도 목적 외 사용, 복제, 제3자에게 공개, 누설 및 유출할 수 없으며, 회사는 유포자의 불법 사용으로 피해가 발생할 경우 유포자에게 민/형사상 책임을 요구할 수 있음.

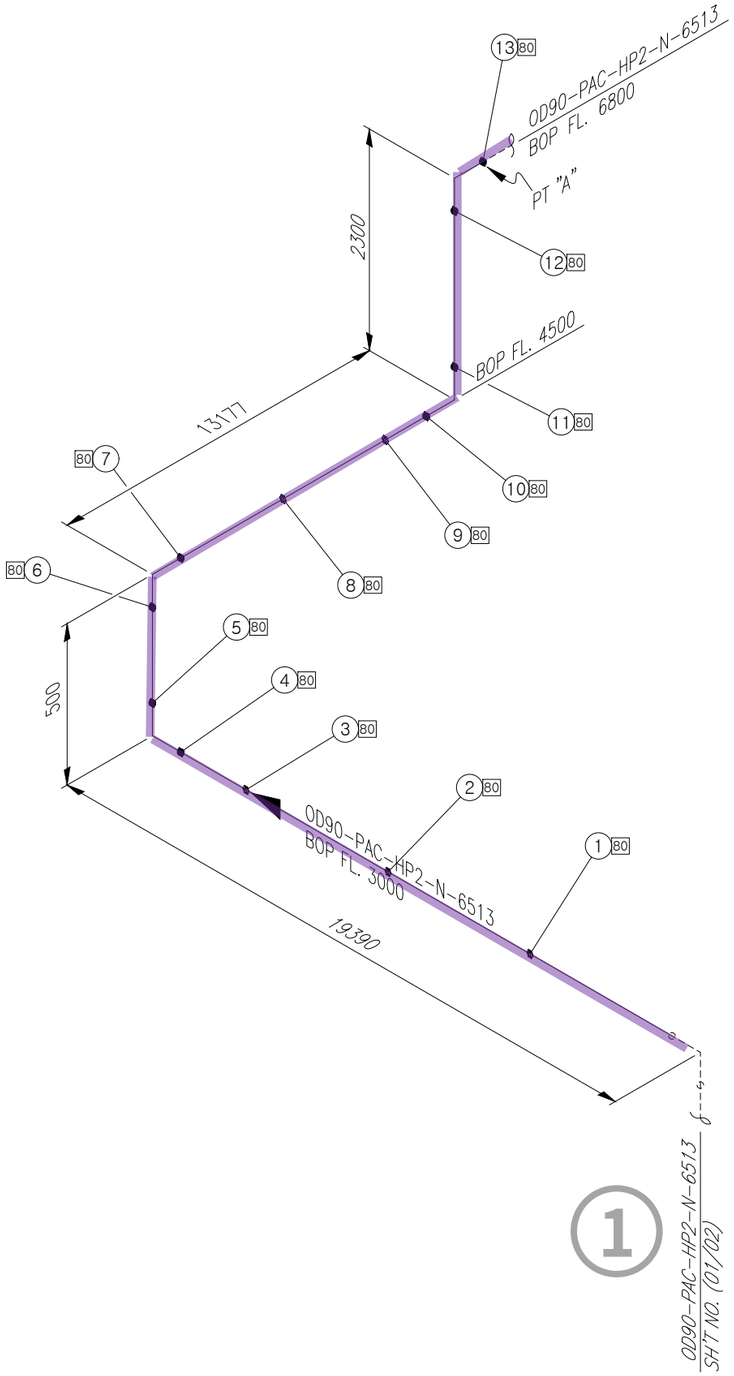

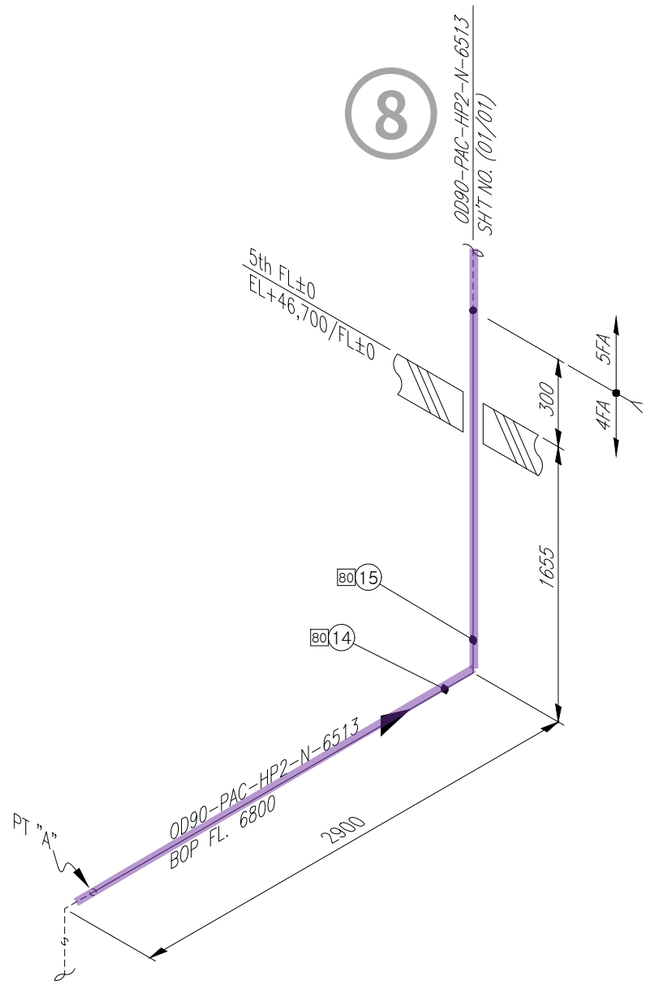

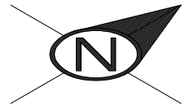

<NOTE>
1. TRAY & ANGLE,CHANNEL SUPPORT가 적용되는
배관 ELEVATION은 현장 맞춤으로 한다.
2. (*) FIELD ADJUST

SK ecoplant

ITEM	SIZE	Q'TY	DESCRIPTION
		HP2	
P	OD90	40.2M	PIPE, HDPE PE100, PE, BUTT FUSION, PN16/SDR11
E90	OD90	5EA	ELBOW 90 DEG, HDPE PE100, PE, BUTT FUSION, PN16/SDR11

* PIPE : P/P1 * 90° ELBOW : E90 * 45° ELBOW : E45 * TEE : T * RED.TEE : TR * STUB-IN : STU * REINFORCING PAD : RP * CON.RED : RC * ECC.RED : RE * CON.SWAGE : RCS/RCS1 * ECC.SWAGE : RES/RES1 * NIPPLE : NP/NP1/NP2 * CAP : CAP/CAP1 * PLUG : PLG * FULL COUPLING : FC * HALF COUPLING : HF/HF1
* STUB-IN : STU * SOCKET(HDPE/PVC) : SC * SADDLE(HDPE) : SD * FLANGE : F/F1 * GASKET : G/G1/G2 * BOLT & NUT : B/B1 * BLIND FLANGE : FB/FB1 * GATE VA. : VG/VG1/VG2 * BALL VA. : VB/VBLO/VB1/VB1LO/VB2/VB2LO * BUTTERFLY VA. : VF/VF4 * CHECK VA. : VC/VC1/VC2/VC3/VC4/VC5/VC6/VC7
* GLOBE VA. : VL/VL1/VL2 * DIAPHRAGM VA. : VD/VDLO * DAMPER : VP * QUICK COUPLING : SQC * FLEXIBLE JOINT(STEEL) : FLXB * FLEXIBLE JOINT(RUBBER) : FLXR * FLEXIBLE JOINT(STEEL_PTFE LINED) : FLXL * FLEXIBLE HOSE : FLXH * STEAM TRAP : ST * SPRAY NOZZLE : SPN * EMERGENCY SHOWER : SSH
* STRAINER(Y-TYPE) : YSTR * STRAINER(T-TYPE) : TSTR * STRAINER(BUCKET-TYPE) : BSTR * ANCHOR PLATE : STOP * BIRD SCREEN : BS * ISOLATION KIT : IK * UNLOADING BOX : UB * AIR TRAP : AT * LOTO : LOTO * SIGHT GLASS : SG * PRESSURE GAUGE : PG * SHILED : SH * SPECIAL BOLT & NUT : BL/BL1

CLIENT SK hynix

7

INSULATION	CODE	N	CONDITION	PRESS. (kg/cm2g)	TEMP. (°C)
	THICK.	–	DESIGN	6.3	60
			OPERATING	4.7	AMB

AREA W14
UNIT 4FA
REF. PLAN DWG. CJ-M15W14-PI-A30-040008-A
REF. P & ID CJ-M15W14-PR-A20-000151

REV. NO.	DATE	DESCRIPTION	BY	CHK	APP'D
0	25.01.24	APPROVED FOR CONSTRUCTION	황래종	안남후	박동영

CONTRACTOR SK ecoplant
PROJECT NAME M15X Ph4 Project
COMMODITY PAC
JOB NO. 22330D
LINE NO. OD90-PAC-HP2-N-6513
SH'T NO. 02 / 02
REV. 0

경고 : 본 도면은 SK HYNIX의 기업비밀 자료로서, 어떠한 경우에도 목적 외 사용, 복제, 제3자에게 공개, 누설 및 유출할 수 없으며, 회사는 유포자의 불법 사용으로 피해가 발생할 경우 유포자에게 민/형사상 책임을 요구할 수 있음.

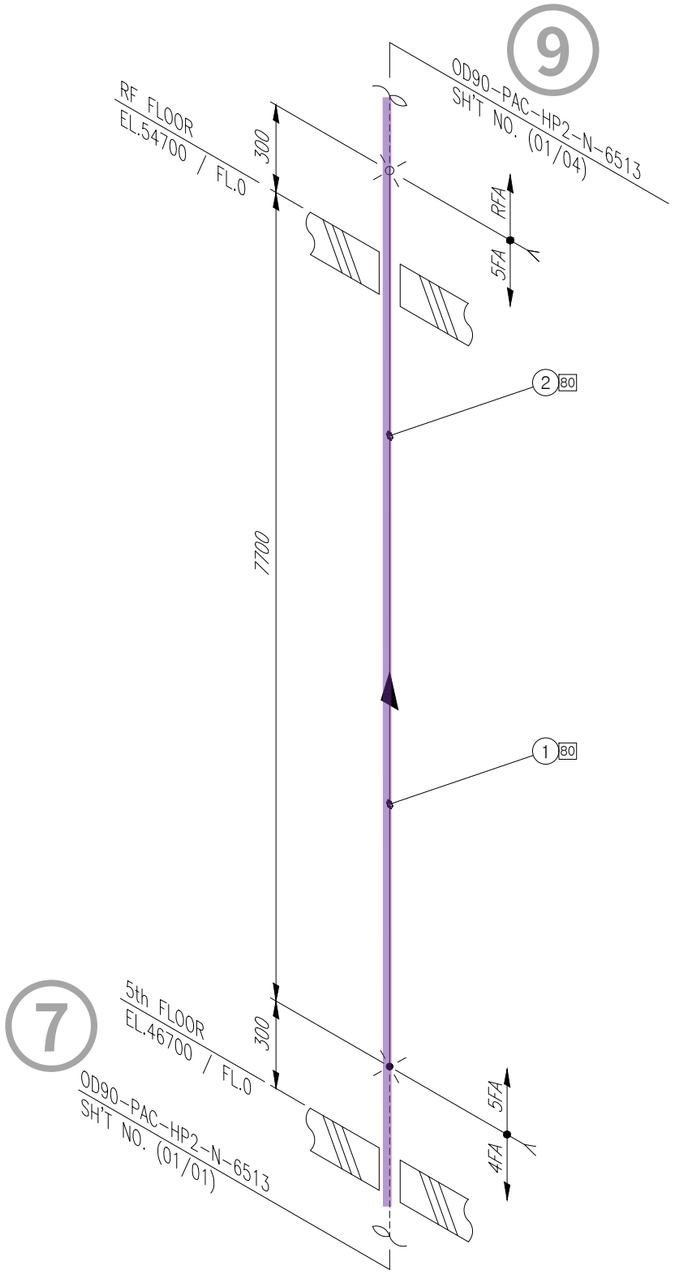

ITEM	SIZE	Q'TY	DESCRIPTION
		HP2	
P	OD90	8.0M	PIPE, HDPE PE100, PE, BUTT FUSION, PN16/SDR11

<NOTE>
1. (*) FIELD ADJUST
2. TRAY & ANGLE,CHANNEL SUPPORT가 적용되는 배관 ELEVATION은 현장 맞춤으로 한다.

* PIPE : P/P1 * 90° ELBOW : E90 * 45° ELBOW : E45 * TEE : T * RED.TEE : TR * STUB-IN : STU * REINFORCING PAD : RP * CON.RED : RC * ECC.RED : RE * CON.SWAGE : RCS/RCS1 * ECC.SWAGE : RES/RES1 * NIPPLE : NP/NP1/NP2 * CAP : CAP/CAP1 * PLUG : PLG * FULL COUPLING : FC * HALF COUPLING : HF/HF1
* STUB-IN : STU * SOCKET(HDPE/PVC) : SC * SADDLE(HDPE) : SD * FLANGE : F/F1 * GASKET : G/G1/G2 * BOLT & NUT : B/B1 * BLIND FLANGE : FB/FB1 * GATE VA. : VG/VG1/VG2 * BALL VA. : VB/VBLO/VB1/VB1LO/VB2/VB2LO * BUTTERFLY VA. : VF/VF4 * CHECK VA. : VC/VC1/VC2/VC3/VC4/VC5/VC6/VC7
* GLOBE VA. : VL/VL1/VL2 * DIAPHRAGM VA. : VD/VDLO * DAMPER : VP * QUICK COUPLING : SQC * FLEXIBLE JOINT(STEEL) : FLXB * FLEXIBLE JOINT(RUBBER) : FLXR * FLEXIBLE JOINT(STEEL_PTFE LINED) : FLXL * FLEXIBLE HOSE : FLXH * STEAM TRAP : ST * SPRAY NOZZLE : SPN * EMERGENCY SHOWER : SSH
* STRAINER(Y-TYPE) : YSTR * STRAINER(T-TYPE) : TSTR * STRAINER(BUCKET-TYPE) : BSTR * ANCHOR PLATE : STOP * BIRD SCREEN : BS * ISOLATION KIT : IK * UNLOADING BOX : UB * AIR TRAP : AT * LOTO : LOTO * SIGHT GLASS : SG * PRESSURE GAUGE : PG * SHILED : SH * SPECIAL BOLT & NUT : BL/BL1

CLIENT SK hynix

8

INSULATION	CODE	N	CONDITION	PRESS. (kg/cm2g)	TEMP. (°C)
	THICK.	–	DESIGN	6.3	60
			OPERATING	4.7	AMB

AREA W14
UNIT 5FA
REF. PLAN DWG. CJ-M15W14-PI-A30-050005-A
REF. P & ID CJ-M15W14-PR-A20-000151

REV. NO.	DATE	DESCRIPTION	BY	CHK	APP'D
0	25.01.24	APPROVED FOR CONSTRUCTION	황래종	안남후	박동영

CONTRACTOR SK ecoplant
COMMODITY PAC
LINE NO. OD90-PAC-HP2-N-6513
PROJECT NAME M15X Ph4 Project
JOB NO. 22330D
SH'T NO. 01 / 01
REV. 0

경고 : 본 도면은 SK HYNIX의 기업비밀 자료로서, 어떠한 경우에도 목적 외 사용, 복제, 제3자에게 공개, 누설 및 유출할 수 없으며, 회사는 유포자의 불법 사용으로 피해가 발생할 경우 유포자에게 민/형사상 책임을 요구할 수 있음.

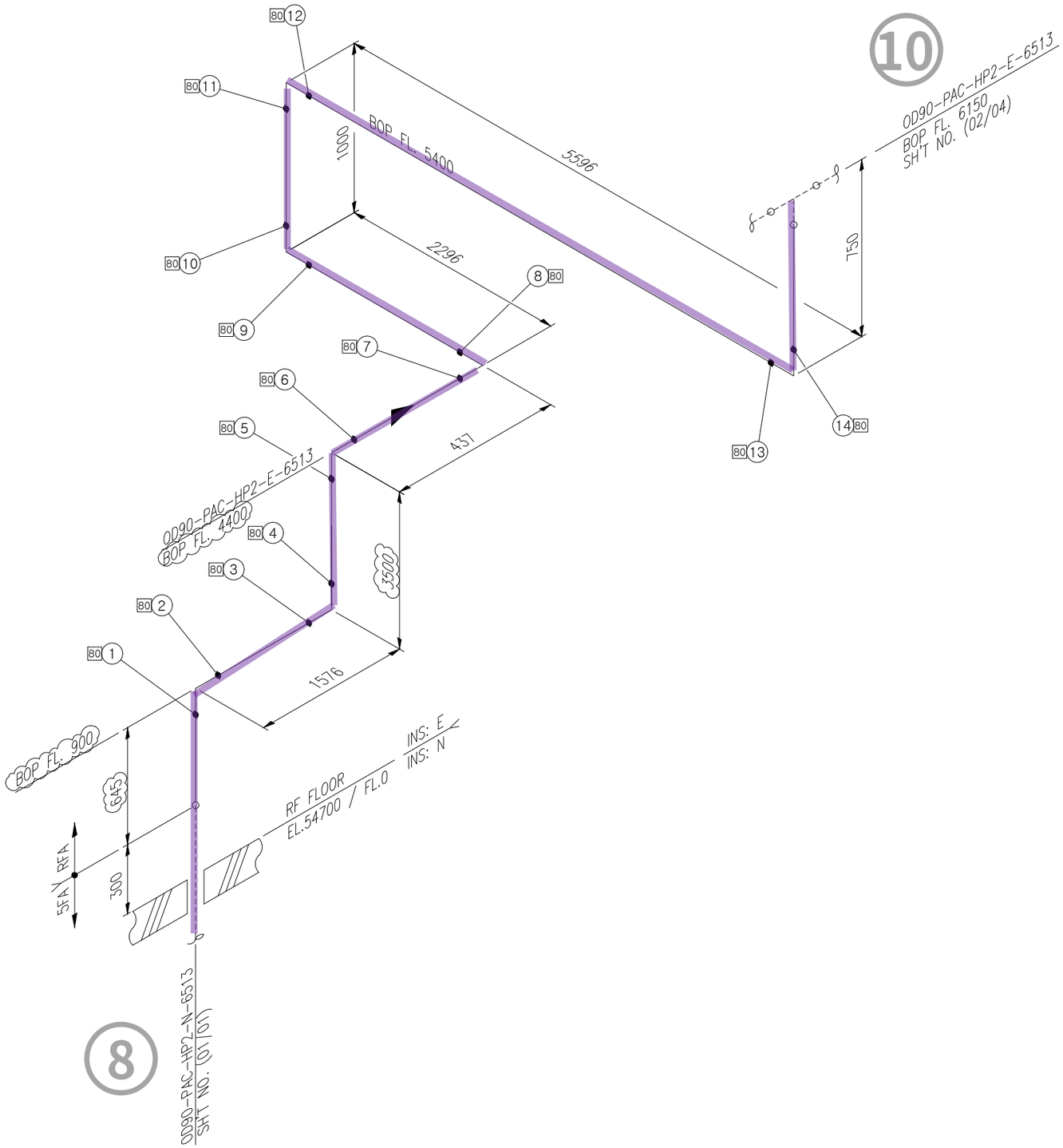

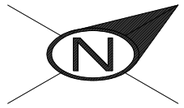

SK ecoplant

ITEM	SIZE	Q'TY	DESCRIPTION
		HP2	
P	OD90	15.8M	PIPE, HDPE PE100, PE, BUTT FUSION, PN16/SDR11
E90	OD90	7EA	ELBOW 90 DEG, HDPE PE100, PE, BUTT FUSION,
			PN16/SDR11
INC	25tXOD90	15.3M	관 보온재(고무발포) + 알루미늄 CASING

<NOTE>

1. (*) FIELD ADJUST

* PIPE : P/P1 * 90° ELBOW : E90 * 45° ELBOW : E45 * TEE : T * RED.TEE : TR * STUB-IN : STU * REINFORCING PAD : RP * CON.RED : RC * ECC.RED : RE * CON.SWAGE : RCS/RCS1 * ECC.SWAGE : RES/RES1 * NIPPLE : NP/NP1/NP2 * CAP : CAP/CAP1 * PLUG : PLG * FULL COUPLING : FC * HALF COUPLING : HF/HF1
* STUB-IN : STU * SOCKET(HDPE/PVC) : SC * SADDLE(HDPE) : SD * FLANGE : F/F1 * GASKET : G/G1/G2 * BOLT & NUT : B/B1 * BLIND FLANGE : FB/FB1 * GATE VA. : VG/VG1/VG2 * BALL VA. : VB/VBLO/VB1/VB1LO/VB2/VB2LO * BUTTERFLY VA. : VF/VF4 * CHECK VA. : VC/VC1/VC2/VC3/VC4/VC5/VC6/VC7
* GLOBE VA. : VL/VL1/VL2 * DIAPHRAGM VA. : VD/VDLO * DAMPER : VP * QUICK COUPLING : SQC * FLEXIBLE JOINT(STEEL) : FLXB * FLEXIBLE JOINT(RUBBER) : FLXR * FLEXIBLE JOINT(STEEL_PTFE LINED) : FLXL * FLEXIBLE HOSE : FLXH * STEAM TRAP : ST * SPRAY NOZZLE : SPN * EMERGENCY SHOWER : SSH
* STRAINER(Y-TYPE) : YSTR * STRAINER(T-TYPE) : TSTR * STRAINER(BUCKET-TYPE) : BSTR * ANCHOR PLATE : STOP * BIRD SCREEN : BS * ISOLATION KIT : IK * UNLOADING BOX : UB * AIR TRAP : AT * LOTO : LOTO * SIGHT GLASS : SG * PRESSURE GAUGE : PG * SHILED : SH * SPECIAL BOLT & NUT : BL/BL1

CLIENT

SK hynix

9

INSULATION	CODE	E	CONDITION	PRESS. (kg/cm2g)	TEMP. (°C)
	THICK.	25	DESIGN	6.3	60
			OPERATING	4.7	AMB

AREA W14

UNIT RFA

REF. PLAN DWG. CJ-M15W13-PI-A30-R10005-A

REF. P & ID CJ-M15W14-PR-A20-000151

REV. NO.	DATE	DESCRIPTION	BY	CHK	APP'D
1	25.03.31	REVISED AS MARKED	황래종	안남후	박동영
0	25.01.24	APPROVED FOR CONSTRUCTION	황래종	안남후	박동영

CONTRACTOR SK ecoplant

COMMODITY PAC

LINE NO. OD90-PAC-HP2-E-6513

PROJECT NAME M15X Ph4 Project

JOB NO. 22330D

SH'T NO. 01 / 04

REV. 1

경고 : 본 도면은 SK HYNIX의 기업비밀 자료로서, 어떠한 경우에도 목적 외 사용, 복제, 제3자에게 공개, 누설 및 유출할 수 없으며, 회사는 유포자의 불법 사용으로 피해가 발생할 경우 유포자에게 민/형사상 책임을 요구할 수 있음.

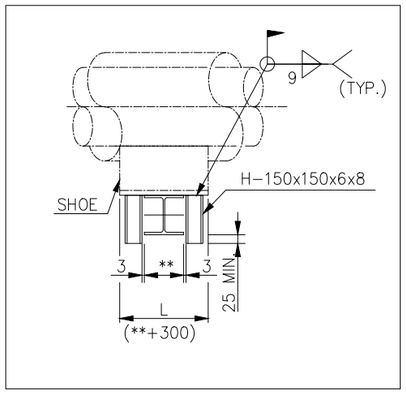

STOPPER
DETAIL "A"

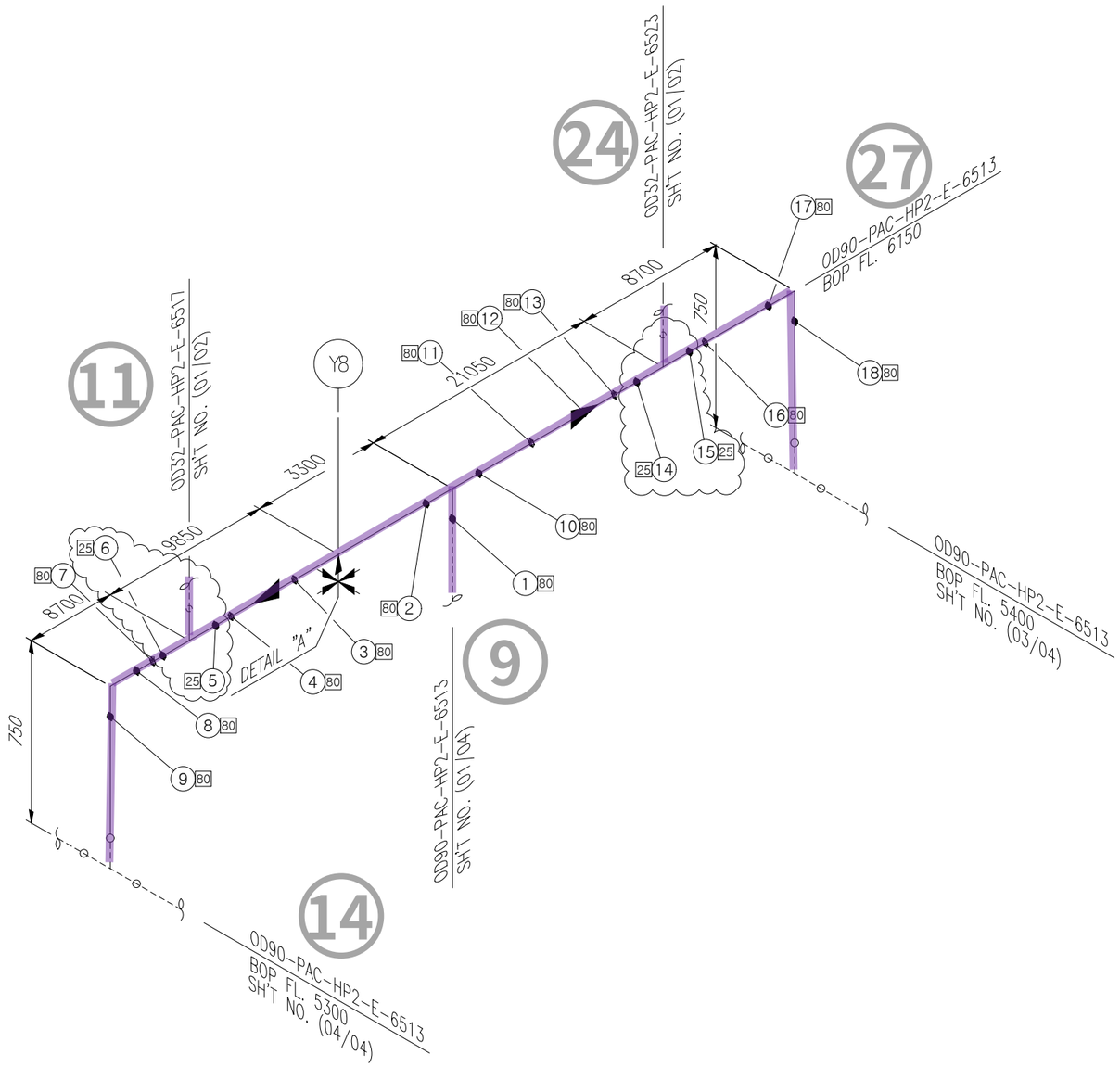

<NOTE>
1. (*) FIELD ADJUST

SK ecoplant

ITEM	SIZE	Q'TY	DESCRIPTION
		HP2	
P	OD90	53.1M	PIPE, HDPE PE100, PE, BUTT FUSION, PN16/SDR11
E90	OD90	2EA	ELBOW 90 DEG, HDPE PE100, PE, BUTT FUSION,
			PN16/SDR11
T	OD90	1EA	TEE EQUAL, HDPE PE100, PE, BUTT FUSION, PN16/SDR11
SD	~~OD90xOD32~~	2EA	SADDLE, ~~HDPE PE100, PE, BRANCH-SOCKET FUSION,~~
			PN16/SDR11
INC	25tXOD90	53.1M	관 보온재(그무발포) + 알루미늄 CASING
TR	OD90xOD32	2EA	RED. TEE, HDPE PE100, PE, BUTT FUSION, PN16/SDR11

* PIPE : P/P1 * 90° ELBOW : E90 * 45° ELBOW : E45 * TEE : T * RED.TEE : TR * STUB-IN : STU * REINFORCING PAD : RP * CON.RED : RC * ECC.RED : RE * CON.SWAGE : RCS/RCS1 * ECC.SWAGE : RES/RES1 * NIPPLE : NP/NP1/NP2 * CAP : CAP/CAP1 * PLUG : PLG * FULL COUPLING : FC * HALF COUPLING : HF/HF1
* STUB-IN : STU * SOCKET(HDPE/PVC) : SC * SADDLE(HDPE) : SD * FLANGE : F/F1 * GASKET : G/G1/G2 * BOLT & NUT : B/B1 * BLIND FLANGE : FB/FB1 * GATE VA. : VG/VG1/VG2 * BALL VA. : VB/VBLO/VB1/VB1LO/VB2/VB2LO * BUTTERFLY VA. : VF/VF4 * CHECK VA. : VC/VC1/VC2/VC3/VC4/VC5/VC6/VC7
* GLOBE VA. : VL/VL1/VL2 * DIAPHRAGM VA. : VD/VDLO * DAMPER : VP * QUICK COUPLING : SQC * FLEXIBLE JOINT(STEEL) : FLXB * FLEXIBLE JOINT(RUBBER) : FLXR * FLEXIBLE JOINT(STEEL_PTFE LINED) : FLXL * FLEXIBLE HOSE : FLXH * STEAM TRAP : ST * SPRAY NOZZLE : SPN * EMERGENCY SHOWER : SSH
* STRAINER(Y-TYPE) : YSTR * STRAINER(T-TYPE) : TSTR * STRAINER(BUCKET-TYPE) : BSTR * ANCHOR PLATE : STOP * BIRD SCREEN : BS * ISOLATION KIT : IK * UNLOADING BOX : UB * AIR TRAP : AT * LOTO : LOTO * SIGHT GLASS : SG * PRESSURE GAUGE : PG * SHILED : SH * SPECIAL BOLT & NUT : BL/BL1

CLIENT SK hynix

INSULATION	CODE	E	CONDITION	PRESS. (kg/cm2g)	TEMP. (°C)
	THICK.	25	DESIGN	6.3	60
			OPERATING	4.7	AMB

AREA W14
UNIT RFA
REF. PLAN DWG. CJ-M15W14-PI-A30-R10005-B
REF. P & ID CJ-M15W14-PR-A20-000151

REV. NO.	DATE	DESCRIPTION	BY	CHK	APP'D
1	25.03.31	REVISED AS MARKED	황래종	안남후	박동영
0	25.01.24	APPROVED FOR CONSTRUCTION	황래종	안남후	박동영

CONTRACTOR SK ecoplant
PROJECT NAME M15X Ph4 Project
COMMODITY PAC
JOB NO. 22330D
LINE NO. OD90-PAC-HP2-E-6513
SH'T NO. 02 / 04
REV. 1

경고 : 본 도면은 SK HYNIX의 기업비밀 자료로서, 어떠한 경우에도 목적 외 사용, 복제, 제3자에게 공개, 누설 및 유출할 수 없으며, 회사는 유포자의 불법 사용으로 피해가 발생할 경우 유포자에게 민/형사상 책임을 요구할 수 있음.

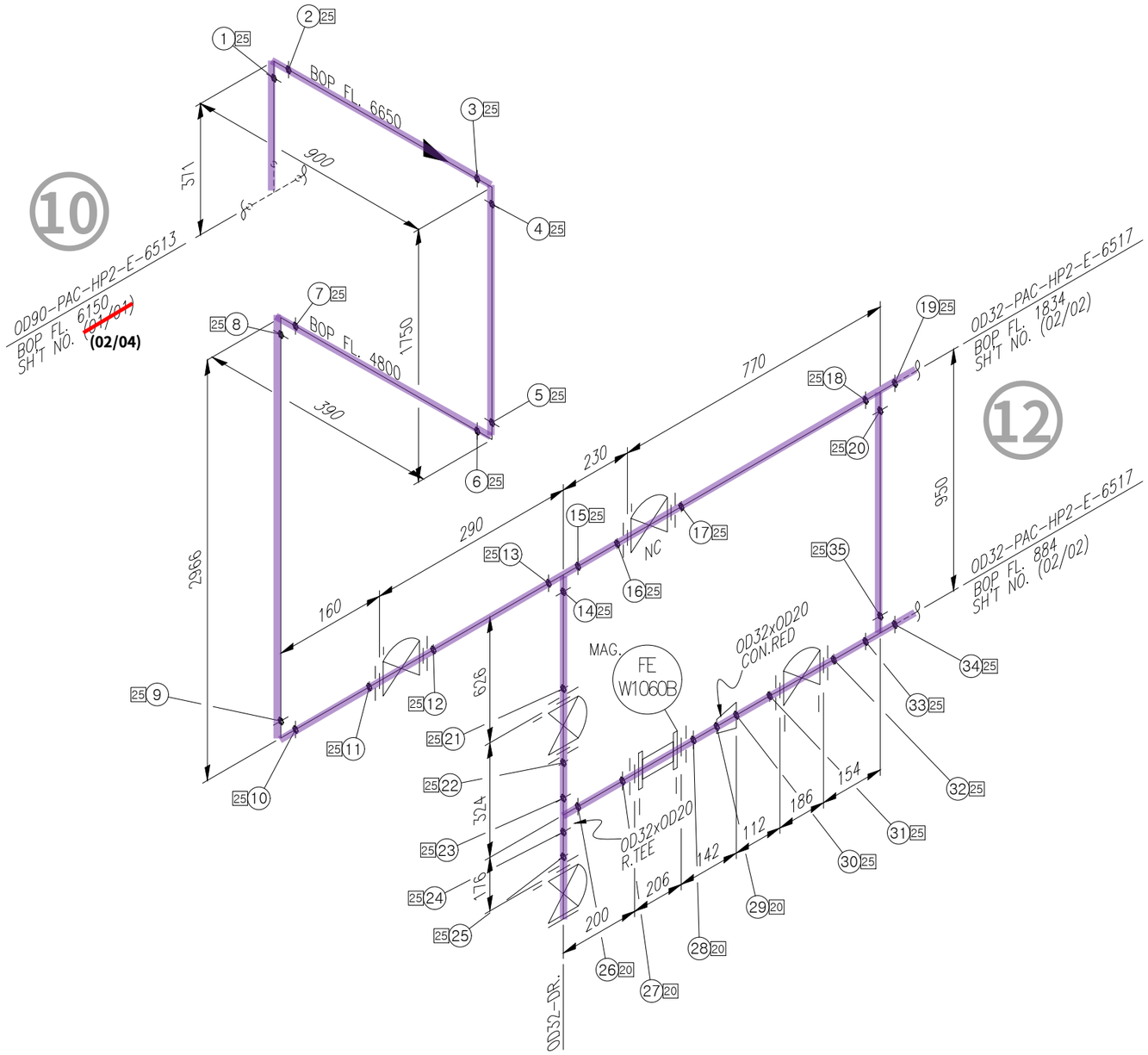

ITEM	SIZE	Q'TY	DESCRIPTION
		HP2	
P	OD32	10.7M	PIPE, HDPE PE100, PE, SOCKET FUSION, PN16/SDR11
P	OD20	0.6M	PIPE, HDPE PE100, PE, SOCKET FUSION, PN16/SDR11
E90	OD32	5EA	ELBOW 90 DEG, HDPE PE100, PE, SOCKET FUSION,
			PN16/SDR11
T	OD32	3EA	TEE EQUAL, HDPE PE100, PE, SOCKET FUSION, PN16/SDR11
TR	OD32xOD20	1EA	TEE RED, HDPE PE100, PE, SOCKET FUSION, PN16/SDR11
RC	OD32xOD20	1EA	REDUCER CON, HDPE PE100, PE, SOCKET FUSION,
			PN16/SDR11
VD	OD32	5EA	DIAPHRAGM VALVE, KS 10K, FF FLG'D, BODY-PP /
			TRIM-EPDM+PTFE DIAPHRAGM, BB, HANDWHEEL
F	OD32	9EA	FLG LAP JOINT / STUB END SET, KS 10K, FF,
			LAP JOINT-STS304 / STUB END-HDPE PE100
F	OD20	2EA	FLG LAP JOINT / STUB END SET, KS 10K, FF,
			LAP JOINT-STS304 / STUB END-HDPE PE100
FB	OD32	1EA	FLG BLIND & LINER SET, KS 10K, FF, BLIND-STS304
			/ LINDER-HDPE PE100 (MIN 5.0MM TH'K)
G	OD32	9EA	GASKET, KS 10K, FF, PTFE+EPDM, 3.0MM TH'K
G	OD20	2EA	GASKET, KS 10K, FF, PTFE+EPDM, 3.0MM TH'K
G2	OD32	1EA	GASKET, KS 10K, FF, PTFE+EPDM, BLIND, 3.0MM TH'K
B1	OD32	10SET	MACHINE BOLT & NYLON NUTS :STS 304 / W WASHERS
B1	OD20	2SET	MACHINE BOLT & NYLON NUTS :STS 304 / W WASHERS
LOTO	OD32	1EA	LOTO
INC	25tXOD32	10.7M	관 보온재(고무발포) + 알루미늄 CASING
INC	25tXOD20	0.6M	관 보온재(고무발포) + 알루미늄 CASING

<NOTE>
1. (*) FIELD ADJUST

* PIPE : P/P1 * 90° ELBOW : E90 * 45° ELBOW : E45 * TEE : T * RED.TEE : TR * STUB-IN : STU * REINFORCING PAD : RP * CON.RED : RC * ECC.RED : RE * CON.SWAGE : RCS/RCS1 * ECC.SWAGE : RES/RES1 * NIPPLE : NP/NP1/NP2 * CAP : CAP/CAP1 * PLUG : PLG * FULL COUPLING : FC * HALF COUPLING : HF/HF1
* STUB-IN : STU * SOCKET(HDPE/PVC) : SC * SADDLE(HDPE) : SD * FLANGE : F/F1 * GASKET : G/G1/G2 * BOLT & NUT : B/B1 * BLIND FLANGE : FB/FB1 * GATE VA. : VG/VG1/VG2 * BALL VA. : VB/VBLO/VB1/VB1LO/VB2/VB2LO * BUTTERFLY VA. : VF/VF4 * CHECK VA. : VC/VC1/VC2/VC3/VC4/VC5/VC6/VC7
* GLOBE VA. : VL/VL1/VL2 * DIAPHRAGM VA. : VD/VDLO * DAMPER : VP * QUICK COUPLING : SQC * FLEXIBLE JOINT(STEEL) : FLXB * FLEXIBLE JOINT(RUBBER) : FLXR * FLEXIBLE JOINT(STEEL_PTFE LINED) : FLXL * FLEXIBLE HOSE : FLXH * STEAM TRAP : ST * SPRAY NOZZLE : SPN * EMERGENCY SHOWER : SSH
* STRAINER(Y-TYPE) : YSTR * STRAINER(T-TYPE) : TSTR * STRAINER(BUCKET-TYPE) : BSTR * ANCHOR PLATE : STOP * BIRD SCREEN : BS * ISOLATION KIT : IK * UNLOADING BOX : UB * AIR TRAP : AT * LOTO : LOTO * SIGHT GLASS : SG * PRESSURE GAUGE : PG * SHILED : SH * SPECIAL BOLT & NUT : BL/BL1

CLIENT SK hynix 11

INSULATION	CODE	E	CONDITION	PRESS. (kg/cm2g)	TEMP. (°C)
	THICK.	25	DESIGN	6.3	60
			OPERATING	4.7	AMB

AREA W14
UNIT RFA
REF. PLAN DWG. CJ-M15W14-PI-A30-R10008-B
REF. P & ID CJ-M15W14-PR-A20-000105

REV. NO.	DATE	DESCRIPTION	BY	CHK	APP'D
1	25.03.31	REVISED AS MARKED	황래종	안남후	박동영
0	25.01.24	APPROVED FOR CONSTRUCTION	황래종	안남후	박동영

CONTRACTOR SK ecoplant
COMMODITY PAC
LINE NO. OD32-PAC-HP2-E-6517
PROJECT NAME M15X Ph4 Project
JOB NO. 22330D
SH'T NO. 01 / 02
REV. 1

경고 : 본 도면은 SK HYNIX의 기업비밀 자료로서, 어떠한 경우에도 목적 외 사용, 복제, 제3자에게 공개, 누설 및 유출할 수 없으며, 회사는 유포자의 불법 사용으로 피해가 발생할 경우 유포자에게 민/형사상 책임을 요구할 수 있음.

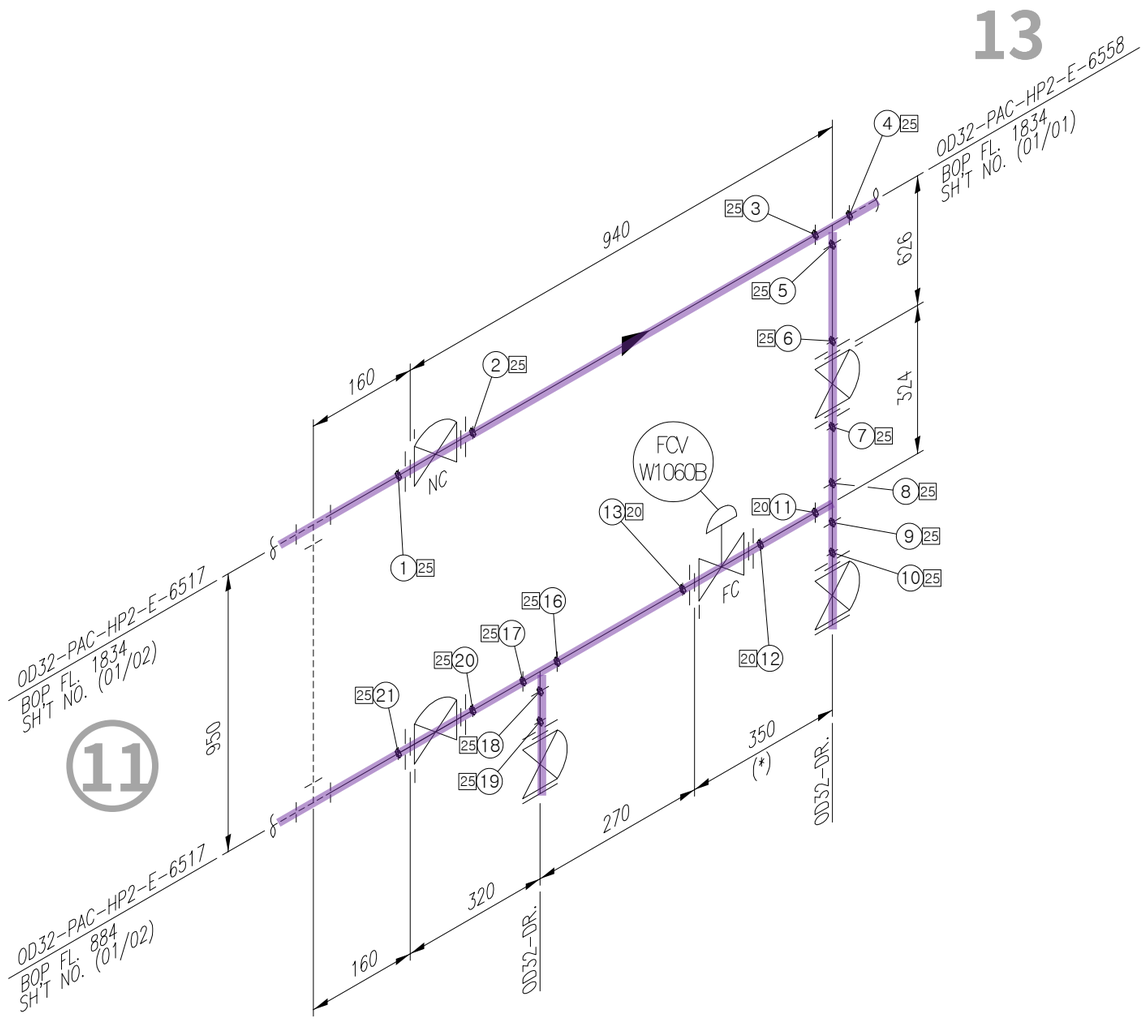

<NOTE>
1. (*) FIELD ADJUST

ITEM	SIZE	Q'TY	DESCRIPTION
		HP2	
P	OD32	3.2M	PIPE, HDPE PE100, PE, SOCKET FUSION, PN16/SDR11
~~P~~	~~OD25~~	~~0.6M~~	~~PIPE, HDPE PE100, PE, SOCKET FUSION, PN16/SDR11~~
T	OD32	2EA	TEE EQUAL, HDPE PE100, PE, SOCKET FUSION, PN16/SDR11
~~TR~~	~~OD32xOD25~~	1EA	TEE RED, ~~HDPE PE100, PE, SOCKET FUSION~~, PN16/SDR11
RC	~~OD32xOD25~~	1EA	REDUCER CON, ~~HDPE PE100, PE, SOCKET~~ FUSION,
			PN16/SDR11
VD	OD32	5EA	DIAPHRAGM VALVE, KS 10K, FF FLG'D, BODY-PP /
			TRIM-EPDM+PTFE DIAPHRAGM, BB, HANDWHEEL
F	OD32	10EA	FLG LAP JOINT / STUB END SET, KS 10K, FF,
			LAP JOINT-STS304 / STUB END-HDPE PE100
~~F~~	~~OD25~~	2EA	FLG LAP ~~JOINT / STUB END SET~~, KS 10K, FF,
			LAP JOINT-STS304 ~~/ STUB END-HDPE~~ PE100
FB	OD32	2EA	FLG BLIND & LINER SET, KS 10K, FF, BLIND-STS304
			/ LINDER-HDPE PE100 (MIN 5.0MM TH'K)
G	OD32	10EA	GASKET, KS 10K, FF, PTFE+EPDM, 3.0MM TH'K
~~G~~	~~OD25~~	~~2EA~~	~~GASKET, KS 10K, FF, PTFE+EPDM, 3.0MM TH'K~~
G2	OD32	2EA	GASKET, KS 10K, FF, PTFE+EPDM, BLIND, 3.0MM TH'K
B1	OD32	12SET	MACHINE BOLT & NYLON NUTS :STS 304 / W WASHERS
~~B1~~	~~OD25~~	~~2SET~~	~~MACHINE BOLT & NYLON NUTS :STS 304 / W WASHERS~~
LOTO	OD32	1EA	LOTO
INC	25tXOD32	3.2M	관 보온재(고무발포) + 알루미늄 CASING
~~INC~~	~~25tXOD25~~	~~0.6M~~	~~관 보온재(고무발포) + 알루미늄 CASING~~

* PIPE : P/P1 * 90° ELBOW : E90 * 45° ELBOW : E45 * TEE : T * RED.TEE : TR * STUB-IN : STU * REINFORCING PAD : RP * CON.RED : RC * ECC.RED : RE * CON.SWAGE : RCS/RCS1 * ECC.SWAGE : RES/RES1 * NIPPLE : NP/NP1/NP2 * CAP : CAP/CAP1 * PLUG : PLG * FULL COUPLING : FC * HALF COUPLING : HF/HF1
* STUB-IN : STU * SOCKET(HDPE/PVC) : SC * SADDLE(HDPE) : SD * FLANGE : F/F1 * GASKET : G/G1/G2 * BOLT & NUT : B/B1 * BLIND FLANGE : FB/FB1 * GATE VA. : VG/VG1/VG2 * BALL VA. : VB/VBLO/VB1/VB1LO/VB2/VB2LO * BUTTERFLY VA. : VF/VF4 * CHECK VA. : VC/VC1/VC2/VC3/VC4/VC5/VC6/VC7
* GLOBE VA. : VL/VL1/VL2 * DIAPHRAGM VA. : VD/VDLO * DAMPER : VP * QUICK COUPLING : SQC * FLEXIBLE JOINT(STEEL) : FLXB * FLEXIBLE JOINT(RUBBER) : FLXR * FLEXIBLE JOINT(STEEL_PTFE LINED) : FLXL * FLEXIBLE HOSE : FLXH * STEAM TRAP : ST * SPRAY NOZZLE : SPN * EMERGENCY SHOWER : SSH
* STRAINER(Y-TYPE) : YSTR * STRAINER(T-TYPE) : TSTR * STRAINER(BUCKET-TYPE) : BSTR * ANCHOR PLATE : STOP * BIRD SCREEN : BS * ISOLATION KIT : IK * UNLOADING BOX : UB * AIR TRAP : AT * LOTO : LOTO * SIGHT GLASS : SG * PRESSURE GAUGE : PG * SHILED : SH * SPECIAL BOLT & NUT : BL/BL1

CLIENT SK hynix

12

INSULATION	CODE	E	CONDITION	PRESS. (kg/cm2g)	TEMP. (°C)
	THICK.	25	DESIGN	6.3	60
			OPERATING	4.7	AMB

AREA W14
UNIT RFA
REF. PLAN DWG. CJ-M15W14-PI-A30-R10008-A
REF. P & ID CJ-M15W14-PR-A20-000105

REV. NO.	DATE	DESCRIPTION	BY	CHK	APP'D
1	25.03.31	REVISED AS MARKED	황래종	안남후	박동영
0	25.01.24	APPROVED FOR CONSTRUCTION	황래종	안남후	박동영

CONTRACTOR SK ecoplant
COMMODITY PAC
LINE NO. OD32-PAC-HP2-E-6517

PROJECT NAME M15X Ph4 Project
JOB NO. 22330D
SH'T NO. 02 / 02
REV. 1

경고 : 본 도면은 SK HYNIX의 기업비밀 자료로서, 어떠한 경우에도 목적 외 사용, 복제, 제3자에게 공개, 누설 및 유출할 수 없으며, 회사는 유포자의 불법 사용으로 피해가 발생할 경우 유포자에게 민/형사상 책임을 요구할 수 있음.

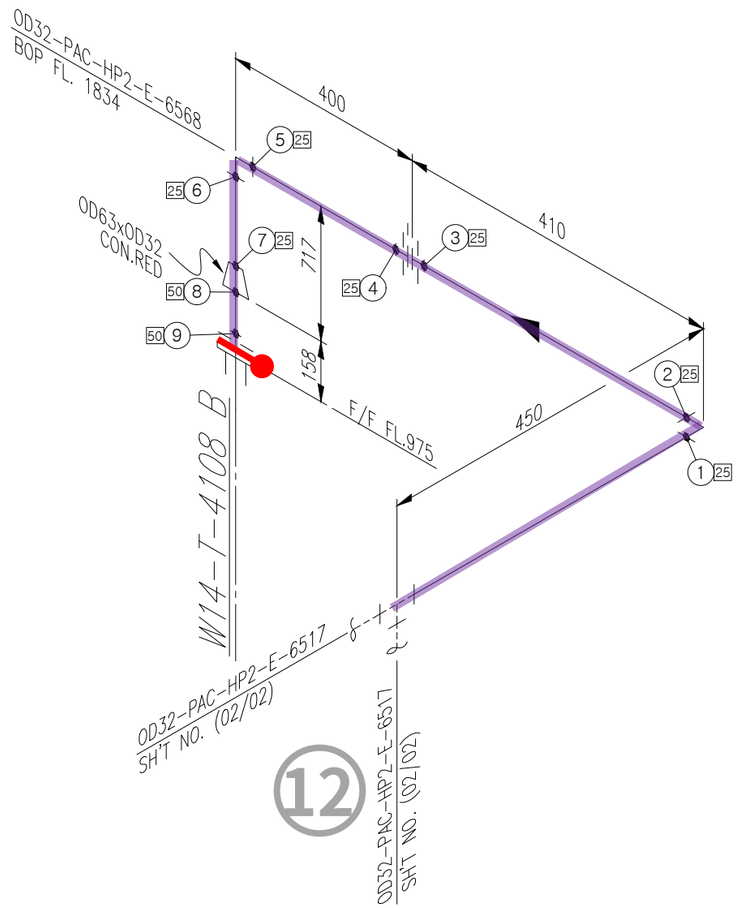

ITEM	SIZE	Q'TY	DESCRIPTION
		HP2	
P	OD63	0.2M	PIPE, HDPE PE100, PE, SOCKET FUSION, PN16/SDR11
P	OD32	2.0M	PIPE, HDPE PE100, PE, SOCKET FUSION, PN16/SDR11
E90	OD32	2EA	ELBOW 90 DEG, HDPE PE100, PE, SOCKET FUSION,
			PN16/SDR11
RC	OD63xOD32	1EA	REDUCER CON, HDPE PE100, PE, SOCKET FUSION,
			PN16/SDR11
F	OD63	1EA	FLG LAP JOINT / STUB END SET, KS 10K, FF,
			LAP JOINT-STS304 / STUB END-HDPE PE100
F	OD32	2EA	FLG LAP JOINT / STUB END SET, KS 10K, FF,
			LAP JOINT-STS304 / STUB END-HDPE PE100
G	OD63	1EA	GASKET, KS 10K, FF, PTFE+EPDM, 3.0MM TH'K
G	OD32	1EA	GASKET, KS 10K, FF, PTFE+EPDM, 3.0MM TH'K
B	OD63	1SET	MACHINE BOLT & NUTS :STS 304 / W WASHERS
B	OD32	1SET	MACHINE BOLT & NUTS :STS 304 / W WASHERS
1 INC	25tXOD63	0.2M	관 보온재(고무발포) + 알루미늄 CASING
INC	25tXOD32	2.0M	관 보온재(고무발포) + 알루미늄 CASING

<NOTE>
1. (*) FIELD ADJUST

* PIPE : P/P1 * 90° ELBOW : E90 * 45° ELBOW : E45 * TEE : T * RED.TEE : TR * STUB-IN : STU * REINFORCING PAD : RP * CON.RED : RC * ECC.RED : RE * CON.SWAGE : RCS/RCS1 * ECC.SWAGE : RES/RES1 * NIPPLE : NP/NP1/NP2 * CAP : CAP/CAP1 * PLUG : PLG * FULL COUPLING : FC * HALF COUPLING : HF/HF1
* STUB-IN : STU * SOCKET(HDPE/PVC) : SC * SADDLE(HDPE) : SD * FLANGE : F/F1 * GASKET : G/G1/G2 * BOLT & NUT : B/B1 * BLIND FLANGE : FB/FB1 * GATE VA. : VG/VG1/VG2 * BALL VA. : VB/VBLO/VB1/VB1LO/VB2/VB2LO * BUTTERFLY VA. : VF/VF4 * CHECK VA. : VC/VC1/VC2/VC3/VC4/VC5/VC6/VC7
* GLOBE VA. : VL/VL1/VL2 * DIAPHRAGM VA. : VD/VDLO * DAMPER : VP * QUICK COUPLING : SQC * FLEXIBLE JOINT(STEEL) : FLXB * FLEXIBLE JOINT(RUBBER) : FLXR * FLEXIBLE JOINT(STEEL_PTFE LINED) : FLXL * FLEXIBLE HOSE : FLXH * STEAM TRAP : ST * SPRAY NOZZLE : SPN * EMERGENCY SHOWER : SSH
* STRAINER(Y-TYPE) : YSTR * STRAINER(T-TYPE) : TSTR * STRAINER(BUCKET-TYPE) : BSTR * ANCHOR PLATE : STOP * BIRD SCREEN : BS * ISOLATION KIT : IK * UNLOADING BOX : UB * AIR TRAP : AT * LOTO : LOTO * SIGHT GLASS : SG * PRESSURE GAUGE : PG * SHILED : SH * SPECIAL BOLT & NUT : BL/BL1

CLIENT SK hynix

13

INSULATION	CODE	E	CONDITION	PRESS. (kg/cm2g)	TEMP. (°C)
	THICK.	25	DESIGN	6.3	60
			OPERATING	4.7	AMB

AREA W14
UNIT RFA
REF. PLAN DWG. CJ-M15W14-PI-A30-R10008-A
REF. P & ID CJ-M15W14-PR-A20-000105

REV. NO.	DATE	DESCRIPTION	BY	CHK	APP'D
1	25.03.31	REVISED AS MARKED	황래종	안남후	박동영
0	25.01.24	APPROVED FOR CONSTRUCTION	황래종	안남후	박동영

CONTRACTOR SK ecoplant
COMMODITY PAC
LINE NO. OD32-PAC-HP2-E-6558
PROJECT NAME M15X Ph4 Project
JOB NO. 22330D
SH'T NO. 01 / 01
REV. 1

경고 : 본 도면은 SK HYNIX의 기업비밀 자료로서, 어떠한 경우에도 목적 외 사용, 복제, 제3자에게 공개, 누설 및 유출할 수 없으며, 회사는 유포자의 불법 사용으로 피해가 발생할 경우 유포자에게 민/형사상 책임을 요구할 수 있음.

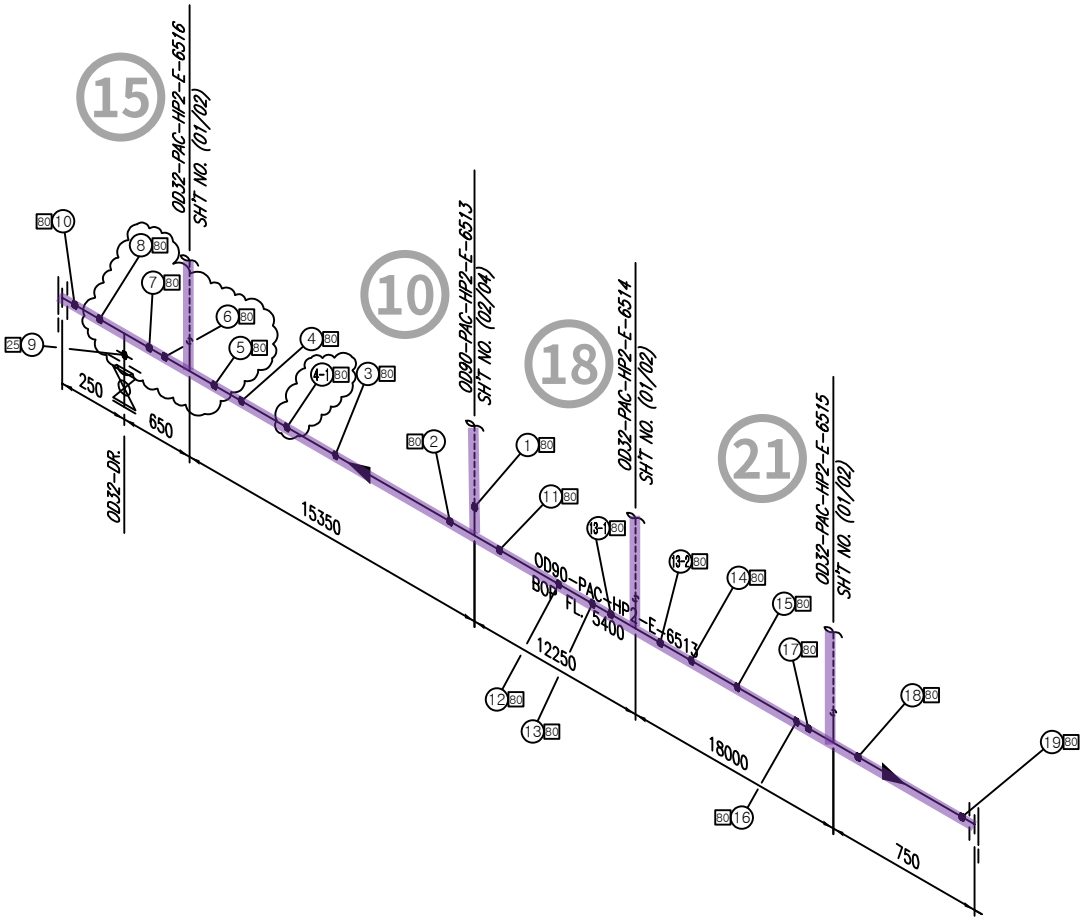

<NOTE>
1. (*) FIELD ADJUST

ITEM	SIZE	Q'TY	DESCRIPTION
		HP2	
P	OD90	47.3M	PIPE, HDPE PE100, PE, BUTT FUSION, PN16/SDR11
P	OD32	0.1M	PIPE, HDPE PE100, PE, SOCKET FUSION, PN16/SDR11
T	OD90	1EA	TEE EQUAL, HDPE PE100, PE, BUTT FUSION, PN16/SDR11
SD	OD90xOD32	3EA	SADDLE, HDPE PE100, PE, BRANCH-SOCKET FUSION, PN16/SDR11
F	OD90	2EA	FLG LAP JOINT / STUB END SET, KS 10K, FF,
			LAP JOINT-STS304 / STUB END-HDPE PE100
F	OD32	1EA	FLG LAP JOINT / STUB END SET, KS 10K, FF,
			LAP JOINT-STS304 / STUB END-HDPE PE100
FB	OD90	2EA	FLG BLIND & LINER SET, KS 10K, FF, BLIND-STS304
			/ LINDER-HDPE PE100 (MIN 5.0MM TH'K)
FB	OD32	1EA	FLG BLIND & LINER SET, KS 10K, FF, BLIND-STS304
			/ LINDER-HDPE PE100 (MIN 5.0MM TH'K)
G	OD32	1EA	GASKET, KS 10K, FF, PTFE+EPDM, 3.0MM TH'K
G2	OD90	2EA	GASKET, KS 10K, FF, PTFE+EPDM, BLIND, 3.0MM TH'K
G2	OD32	1EA	GASKET, KS 10K, FF, PTFE+EPDM, BLIND, 3.0MM TH'K
B	OD90	2SET	MACHINE BOLT & NUTS :STS 304 / W WASHERS
B	OD32	2SET	MACHINE BOLT & NUTS :STS 304 / W WASHERS
VB	OD32	1EA	BALL VALVE, KS 10K, FF FLG'D, BODY-PP /
			TRIM-PP / SEAT-PTFE, FB, LEVER
INC	25tXOD90	47.3M	관 보온재(고무발포) + 알루미늄 CASING
INC	25tXOD32	0.1M	관 보온재(고무발포) + 알루미늄 CASING
TR	OD90xOD32	4EA	RED. TEE, HDPE PE100, PE, BUTT FUSION, PN16/SDR11

* PIPE : P/P1 * 90° ELBOW : E90 * 45° ELBOW : E45 * TEE : T * RED.TEE : TR * STUB-IN : STU * REINFORCING PAD : RP * CON.RED : RC * ECC.RED : RE * CON.SWAGE : RCS/RCS1 * ECC.SWAGE : RES/RES1 * NIPPLE : NP/NP1/NP2 * CAP : CAP/CAP1 * PLUG : PLG * FULL COUPLING : FC * HALF COUPLING : HF/HF1
* STUB-IN : STU * SOCKET(HDPE/PVC) : SC * SADDLE(HDPE) : SD * FLANGE : F/F1 * GASKET : G/G1/G2 * BOLT & NUT : B/B1 * BLIND FLANGE : FB/FB1 * GATE VA. : VG/VG1/VG2 * BALL VA. : VB/VBLO/VB1/VB1LO/VB2/VB2LO * BUTTERFLY VA. : VF/VF4 * CHECK VA. : VC/VC1/VC2/VC3/VC4/VC5/VC6/VC7
* GLOBE VA. : VL/VL1/VL2 * DIAPHRAGM VA. : VD/VDLO * DAMPER : VP * QUICK COUPLING : SQC * FLEXIBLE JOINT(STEEL) : FLXB * FLEXIBLE JOINT(RUBBER) : FLXR * FLEXIBLE JOINT(STEEL_PTFE LINED) : FLXL * FLEXIBLE HOSE : FLXH * STEAM TRAP : ST * SPRAY NOZZLE : SPN * EMERGENCY SHOWER : SSH
* STRAINER(Y-TYPE) : YSTR * STRAINER(T-TYPE) : TSTR * STRAINER(BUCKET-TYPE) : BSTR * ANCHOR PLATE : STOP * BIRD SCREEN : BS * ISOLATION KIT : IK * UNLOADING BOX : UB * AIR TRAP : AT * LOTO : LOTO * SIGHT GLASS : SG * PRESSURE GAUGE : PG * SHILED : SH * SPECIAL BOLT & NUT : BL/BL1

CLIENT SK hynix

14

INSULATION	CODE	E	CONDITION	PRESS. (kg/cm2g)	TEMP. (°C)
	THICK.	25	DESIGN	6.3	60
			OPERATING	4.7	AMB

AREA W14
UNIT RFA
REF. PLAN DWG. CJ-M15W14-PI-A30-R10008-B
REF. P & ID CJ-M15W14-PR-A20-000151

REV. NO.	DATE	DESCRIPTION	BY	CHK	APP'D
1	25.03.31	REVISED AS MARKED	황래종	안남후	박동영
0	25.01.24	APPROVED FOR CONSTRUCTION	황래종	안남후	박동영

CONTRACTOR SK ecoplant
PROJECT NAME M15X Ph4 Project
COMMODITY PAC
JOB NO. 22330D
LINE NO. OD90-PAC-HP2-E-6513
SH'T NO. 04 / 04
REV. 1

경고 : 본 도면은 SK HYNIX의 기업비밀 자료로서, 어떠한 경우에도 목적 외 사용, 복제, 제3자에게 공개, 누설 및 유출할 수 없으며, 회사는 유포자의 불법 사용으로 피해가 발생할 경우 유포자에게 민/형사상 책임을 요구할 수 있음.

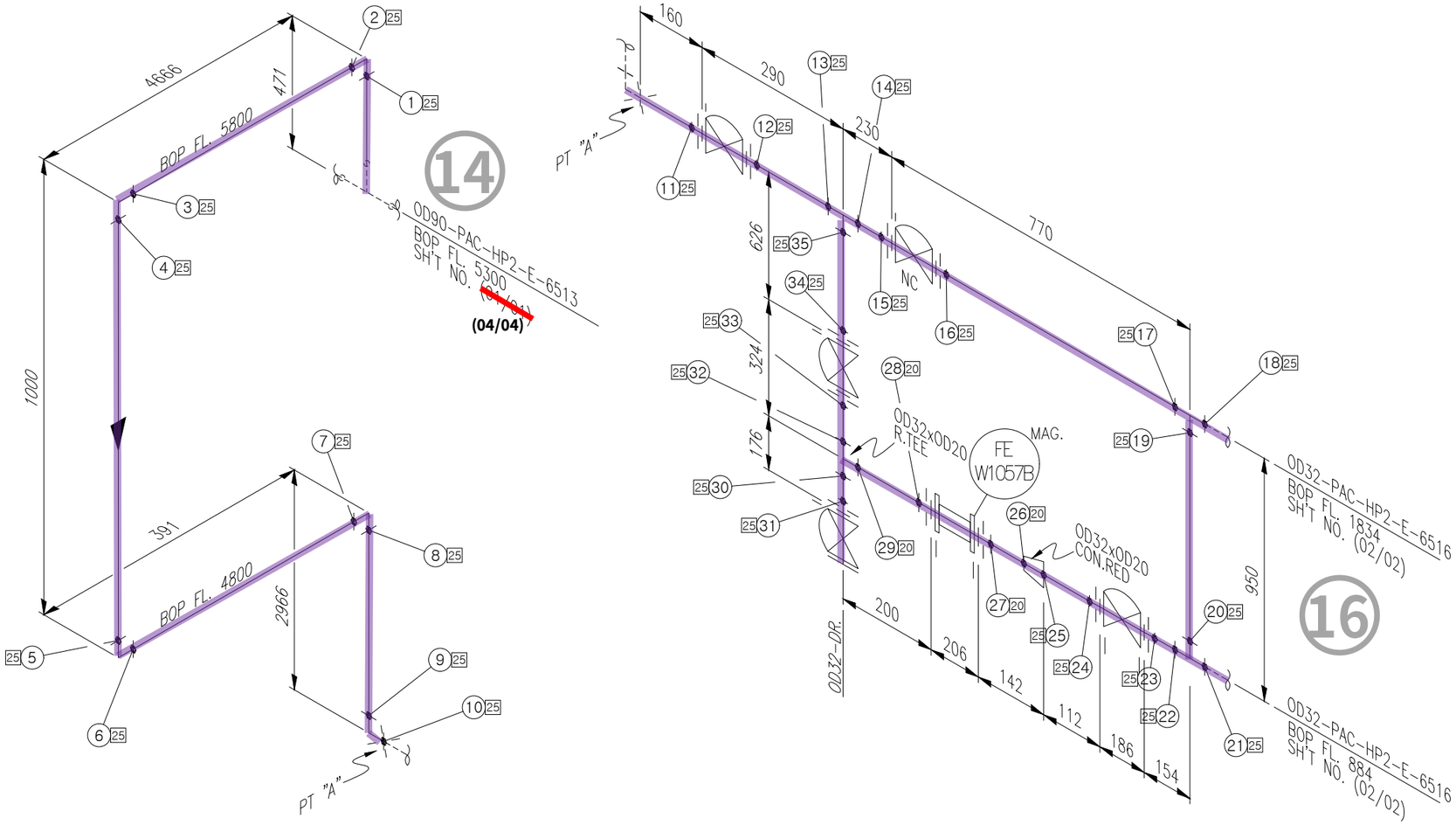

<NOTE>
1. (*) FIELD ADJUST

ITEM	SIZE	Q'TY	DESCRIPTION
		HP2	
P	OD32	13.5M	PIPE, HDPE PE100, PE, SOCKET FUSION, PN16/SDR11
P	OD20	0.6M	PIPE, HDPE PE100, PE, SOCKET FUSION, PN16/SDR11
E90	OD32	5EA	ELBOW 90 DEG, HDPE PE100, PE, SOCKET FUSION,
			PN16/SDR11
T	OD32	3EA	TEE EQUAL, HDPE PE100, PE, SOCKET FUSION, PN16/SDR11
TR	OD32xOD20	1EA	TEE RED, HDPE PE100, PE, SOCKET FUSION, PN16/SDR11
RC	OD32xOD20	1EA	REDUCER CON, HDPE PE100, PE, SOCKET FUSION,
			PN16/SDR11
VD	OD32	5EA	DIAPHRAGM VALVE, KS 10K, FF FLG'D, BODY-PP /
			TRIM-EPDM+PTFE DIAPHRAGM, BB, HANDWHEEL
F	OD32	9EA	FLG LAP JOINT / STUB END SET, KS 10K, FF,
			LAP JOINT-STS304 / STUB END-HDPE PE100
F	OD20	2EA	FLG LAP JOINT / STUB END SET, KS 10K, FF,
			LAP JOINT-STS304 / STUB END-HDPE PE100
FB	OD32	1EA	FLG BLIND & LINER SET, KS 10K, FF, BLIND-STS304
			/ LINDER-HDPE PE100 (MIN 5.0MM TH'K)
G	OD32	9EA	GASKET, KS 10K, FF, PTFE+EPDM, 3.0MM TH'K
G	OD20	2EA	GASKET, KS 10K, FF, PTFE+EPDM, 3.0MM TH'K
G2	OD32	1EA	GASKET, KS 10K, FF, PTFE+EPDM, BLIND, 3.0MM TH'K
B1	OD32	10SET	MACHINE BOLT & NYLON NUTS :STS 304 / W WASHERS
B1	OD20	2SET	MACHINE BOLT & NYLON NUTS :STS 304 / W WASHERS
LOTO	OD32	1EA	LOTO
INC	25tXOD32	13.5M	관 보온재(고무발포) + 알루미늄 CASING
INC	25tXOD20	0.6M	관 보온재(고무발포) + 알루미늄 CASING

* PIPE : P/P1 * 90° ELBOW : E90 * 45° ELBOW : E45 * TEE : T * RED.TEE : TR * STUB-IN : STU * REINFORCING PAD : RP * CON.RED : RC * ECC.RED : RE * CON.SWAGE : RCS/RCS1 * ECC.SWAGE : RES/RES1 * NIPPLE : NP/NP1/NP2 * CAP : CAP/CAP1 * PLUG : PLG * FULL COUPLING : FC * HALF COUPLING : HF/HF1
* STUB-IN : STU * SOCKET(HDPE/PVC) : SC * SADDLE(HDPE) : SD * FLANGE : F/F1 * GASKET : G/G1/G2 * BOLT & NUT : B/B1 * BLIND FLANGE : FB/FB1 * GATE VA. : VG/VG1/VG2 * BALL VA. : VB/VBLO/VB1/VB1LO/VB2/VB2LO * BUTTERFLY VA. : VF/VF4 * CHECK VA. : VC/VC1/VC2/VC3/VC4/VC5/VC6/VC7
* GLOBE VA. : VL/VL1/VL2 * DIAPHRAGM VA. : VD/VDLO * DAMPER : VP * QUICK COUPLING : SQC * FLEXIBLE JOINT(STEEL) : FLXB * FLEXIBLE JOINT(RUBBER) : FLXR * FLEXIBLE JOINT(STEEL_PTFE LINED) : FLXL * FLEXIBLE HOSE : FLXH * STEAM TRAP : ST * SPRAY NOZZLE : SPN * EMERGENCY SHOWER : SSH
* STRAINER(Y-TYPE) : YSTR * STRAINER(T-TYPE) : TSTR * STRAINER(BUCKET-TYPE) : BSTR * ANCHOR PLATE : STOP * BIRD SCREEN : BS * ISOLATION KIT : IK * UNLOADING BOX : UB * AIR TRAP : AT * LOTO : LOTO * SIGHT GLASS : SG * PRESSURE GAUGE : PG * SHILED : SH * SPECIAL BOLT & NUT : BL/BL1

CLIENT SK hynix

15

INSULATION	CODE	E	CONDITION	PRESS. (kg/cm2g)	TEMP. (°C)
	THICK.	25	DESIGN	6.3	60
			OPERATING	4.7	AMB

AREA W14
UNIT RFA
REF. PLAN DWG. CJ-M15W14-PI-A30-R10009-B
REF. P & ID CJ-M15W14-PR-A20-000104

REV. NO.	DATE	DESCRIPTION	BY	CHK	APP'D
1	25.03.31	REVISED AS MARKED	황래종	안남후	박동영
0	25.01.24	APPROVED FOR CONSTRUCTION	황래종	안남후	박동영

CONTRACTOR SK ecoplant
PROJECT NAME M15X Ph4 Project
COMMODITY PAC
JOB NO. 22330D
LINE NO. OD32-PAC-HP2-E-6516
SH'T NO. 01 / 02
REV. 1

경고 : 본 도면은 SK HYNIX의 기업비밀 자료로서, 어떠한 경우에도 목적 외 사용, 복제, 제3자에게 공개, 누설 및 유출할 수 없으며, 회사는 유포자의 불법 사용으로 피해가 발생할 경우 유포자에게 민/형사상 책임을 요구할 수 있음.

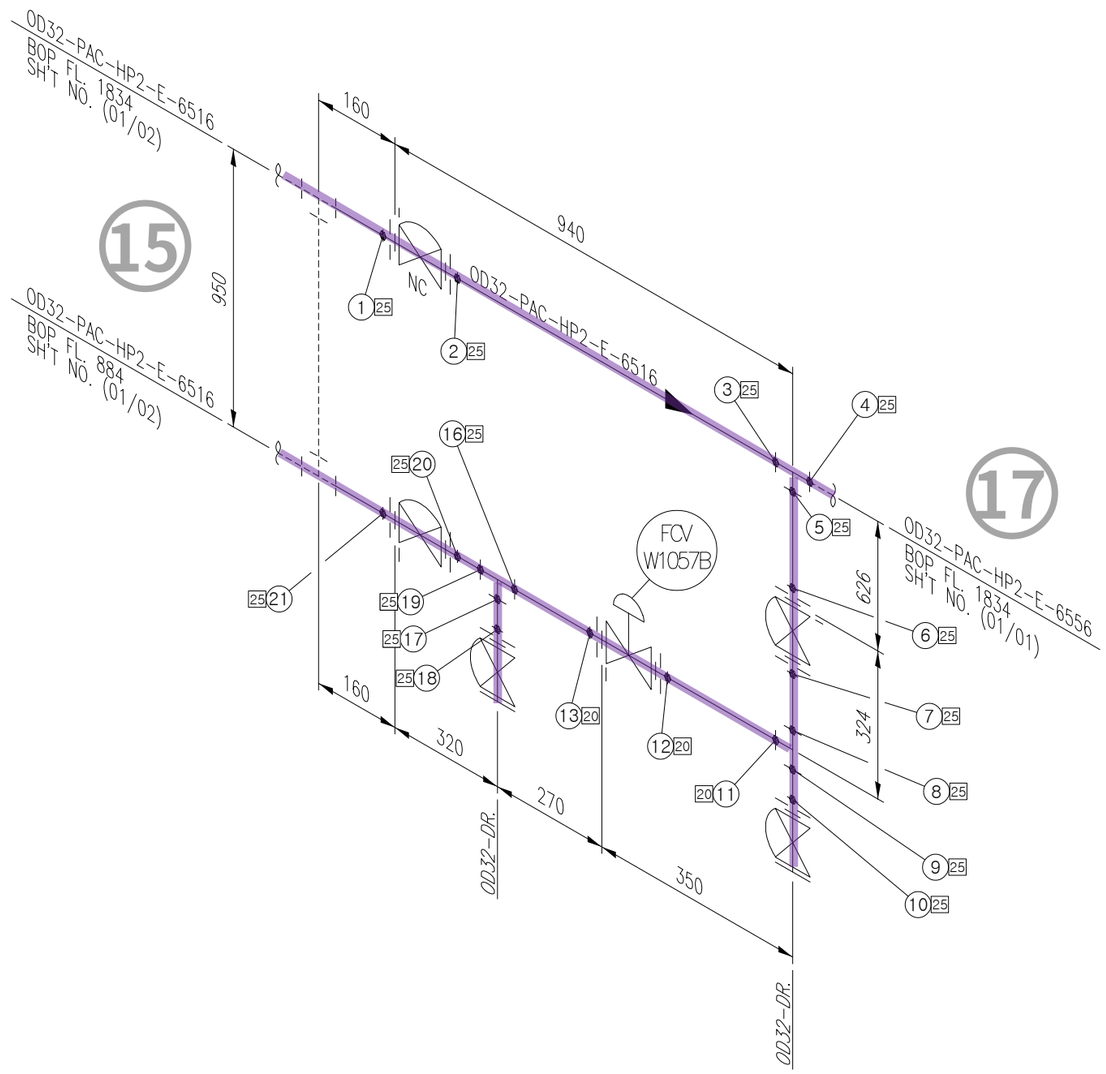

<NOTE>
1. (*) FIELD ADJUST

ITEM	SIZE	Q'TY	DESCRIPTION
		HP2	
P	OD32	3.2M	PIPE, HDPE PE100, PE, SOCKET FUSION, PN16/SDR11
~~P~~	~~OD25~~	~~0.6M~~	~~PIPE, HDPE PE100, PE, SOCKET FUSION, PN16/SDR11~~
T	OD32	2EA	TEE EQUAL, HDPE PE100, PE, SOCKET FUSION, PN16/SDR11
~~TR~~	~~OD32xOD25~~	1EA	TEE RED, ~~HDPE PE100, PE, SOCKET FUSION, PN16/SDR11~~
~~RC~~	~~OD32xOD25~~	1EA	REDUCER CON, ~~HDPE PE100, PE, SOCKET~~ FUSION,
			PN16/SDR11
VD	OD32	5EA	DIAPHRAGM VALVE, KS 10K, FF FLG'D, BODY-PP /
			TRIM-EPDM+PTFE DIAPHRAGM, BB, HANDWHEEL
F	OD32	10EA	FLG LAP JOINT / STUB END SET, KS 10K, FF,
			LAP JOINT-STS304 / STUB END-HDPE PE100
~~F~~	~~OD25~~	2EA	FLG LAP ~~JOINT / STUB END SET,~~ KS 10K, FF,
			LAP JOINT-STS304 ~~/ STUB END-HDPE~~ PE100
FB	OD32	2EA	FLG BLIND & LINER SET, KS 10K, FF, BLIND-STS304
			/ LINDER-HDPE PE100 (MIN 5.0MM TH'K)
G	OD32	10EA	GASKET, KS 10K, FF, PTFE+EPDM, 3.0MM TH'K
~~G~~	~~OD25~~	~~2EA~~	~~GASKET, KS 10K, FF, PTFE+EPDM, 3.0MM TH'K~~
G2	OD32	2EA	GASKET, KS 10K, FF, PTFE+EPDM, BLIND, 3.0MM TH'K
B1	OD32	12SET	MACHINE BOLT & NYLON NUTS :STS 304 / W WASHERS
~~B1~~	~~OD25~~	~~2SET~~	~~MACHINE BOLT & NYLON NUTS :STS 304 / W WASHERS~~
LOTO	OD32	1EA	LOTO
INC	25tXOD32	3.2M	관 보온재(고무발포) + 알루미늄 CASING
~~INC~~	~~25tXOD25~~	~~0.6M~~	~~관 보온재(고무발포) + 알루미늄 CASING~~

* PIPE : P/P1 * 90° ELBOW : E90 * 45° ELBOW : E45 * TEE : T * RED.TEE : TR * STUB-IN : STU * REINFORCING PAD : RP * CON.RED : RC * ECC.RED : RE * CON.SWAGE : RCS/RCS1 * ECC.SWAGE : RES/RES1 * NIPPLE : NP/NP1/NP2 * CAP : CAP/CAP1 * PLUG : PLG * FULL COUPLING : FC * HALF COUPLING : HF/HF1
* STUB-IN : STU * SOCKET(HDPE/PVC) : SC * SADDLE(HDPE) : SD * FLANGE : F/F1 * GASKET : G/G1/G2 * BOLT & NUT : B/B1 * BLIND FLANGE : FB/FB1 * GATE VA. : VG/VG1/VG2 * BALL VA. : VB/VBL0/VB1/VB1L0/VB2/VB2L0 * BUTTERFLY VA. : VF/VF4 * CHECK VA. : VC/VC1/VC2/VC3/VC4/VC5/VC6/VC7
* GLOBE VA. : VL/VL1/VL2 * DIAPHRAGM VA. : VD/VDL0 * DAMPER : VP * QUICK COUPLING : SQC * FLEXIBLE JOINT(STEEL) : FLXB * FLEXIBLE JOINT(RUBBER) : FLXR * FLEXIBLE JOINT(STEEL_PTFE LINED) : FLXL * FLEXIBLE HOSE : FLXH * STEAM TRAP : ST * SPRAY NOZZLE : SPN * EMERGENCY SHOWER : SSH
* STRAINER(Y-TYPE) : YSTR * STRAINER(T-TYPE) : TSTR * STRAINER(BUCKET-TYPE) : BSTR * ANCHOR PLATE : STOP * BIRD SCREEN : BS * ISOLATION KIT : IK * UNLOADING BOX : UB * AIR TRAP : AT * LOTO : LOTO * SIGHT GLASS : SG * PRESSURE GAUGE : PG * SHILED : SH * SPECIAL BOLT & NUT : BL/BL1

CLIENT SK hynix

16

INSULATION	CODE	E	CONDITION	PRESS. (kg/cm2g)	TEMP. (°C)
	THICK.	25	DESIGN	6.3	60
			OPERATING	4.7	AMB

AREA W14
UNIT RFA
REF. PLAN DWG. CJ-M15W14-PI-A30-R10009-A
REF. P & ID CJ-M15W14-PR-A20-000104

REV. NO.	DATE	DESCRIPTION	BY	CHK	APP'D
1	25.03.31	REVISED AS MARKED	황래종	안남후	박동영
0	25.01.24	APPROVED FOR CONSTRUCTION	황래종	안남후	박동영

CONTRACTOR SK ecoplant
PROJECT NAME M15X Ph4 Project
COMMODITY PAC
JOB NO. 22330D
LINE NO. OD32-PAC-HP2-E-6516
SH'T NO. 02 / 02
REV. 1

경고 : 본 도면은 SK HYNIX의 기업비밀 자료로서, 어떠한 경우에도 목적 외 사용, 복제, 제3자에게 공개, 누설 및 유출할 수 없으며, 회사는 유포자의 불법 사용으로 피해가 발생할 경우 유포자에게 민/형사상 책임을 요구할 수 있음.

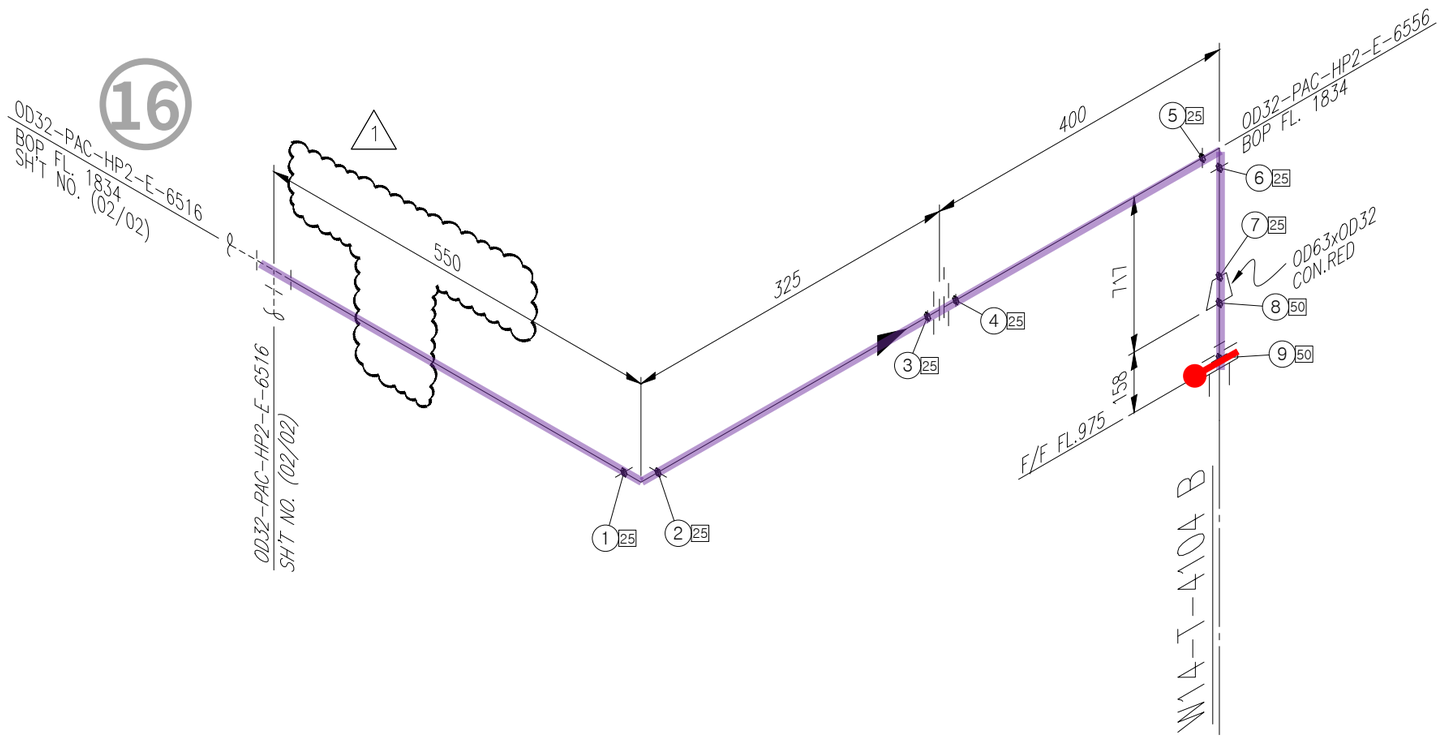

ITEM	SIZE	Q'TY	DESCRIPTION
		HP2	
P	OD63	0.2M	PIPE, HDPE PE100, PE, SOCKET FUSION, PN16/SDR11
P	OD32	2.0M	PIPE, HDPE PE100, PE, SOCKET FUSION, PN16/SDR11
E90	OD32	2EA	ELBOW 90 DEG, HDPE PE100, PE, SOCKET FUSION,
			PN16/SDR11
RC	OD63xOD32	1EA	REDUCER CON, HDPE PE100, PE, SOCKET FUSION,
			PN16/SDR11
1			
			TRIM-EPDM+PTFE DIAPHRAGM, BB, HANDWHEEL
F	OD63	1EA	FLG LAP JOINT / STUB END SET, KS 10K, FF,
			LAP JOINT-STS304 / STUB END-HDPE PE100
F	OD32	1 2EA	FLG LAP JOINT / STUB END SET, KS 10K, FF,
			LAP JOINT-STS304 / STUB END-HDPE PE100
G	OD63	1EA	GASKET, KS 10K, FF, PTFE+EPDM, 3.0MM TH'K
G	OD32	1 1EA	GASKET, KS 10K, FF, PTFE+EPDM, 3.0MM TH'K
B	OD63	1SET	MACHINE BOLT & NUTS :STS 304 / W WASHERS
B	OD32	1 1SET	MACHINE BOLT & NUTS :STS 304 / W WASHERS
1 INC	25tX50A	0.2M	관 보온재(고무발포) + 알루미늄 CASING
INC	25tX25A	2.0M	관 보온재(고무발포) + 알루미늄 CASING

<NOTE>
1. (*) FIELD ADJUST

* PIPE : P/P1 * 90° ELBOW : E90 * 45° ELBOW : E45 * TEE : T * RED.TEE : TR * STUB-IN : STU * REINFORCING PAD : RP * CON.RED : RC * ECC.RED : RE * CON.SWAGE : RCS/RCS1 * ECC.SWAGE : RES/RES1 * NIPPLE : NP/NP1/NP2 * CAP : CAP/CAP1 * PLUG : PLG * FULL COUPLING : FC * HALF COUPLING : HF/HF1
* STUB-IN : STU * SOCKET(HDPE/PVC) : SC * SADDLE(HDPE) : SD * FLANGE : F/F1 * GASKET : G/G1/G2 * BOLT & NUT : B/B1 * BLIND FLANGE : FB/FB1 * GATE VA. : VG/VG1/VG2 * BALL VA. : VB/VBLO/VB1/VB1LO/VB2/VB2LO * BUTTERFLY VA. : VF/VF4 * CHECK VA. : VC/VC1/VC2/VC3/VC4/VC5/VC6/VC7
* GLOBE VA. : VL/VL1/VL2 * DIAPHRAGM VA. : VD/VDLO * DAMPER : VP * QUICK COUPLING : SQC * FLEXIBLE JOINT(STEEL) : FLXB * FLEXIBLE JOINT(RUBBER) : FLXR * FLEXIBLE JOINT(STEEL_PTFE LINED) : FLXL * FLEXIBLE HOSE : FLXH * STEAM TRAP : ST * SPRAY NOZZLE : SPN * EMERGENCY SHOWER : SSH
* STRAINER(Y-TYPE) : YSTR * STRAINER(T-TYPE) : TSTR * STRAINER(BUCKET-TYPE) : BSTR * ANCHOR PLATE : STOP * BIRD SCREEN : BS * ISOLATION KIT : IK * UNLOADING BOX : UB * AIR TRAP : AT * LOTO : LOTO * SIGHT GLASS : SG * PRESSURE GAUGE : PG * SHILED : SH * SPECIAL BOLT & NUT : BL/BL1

INSULATION	CODE	E	CONDITION	PRESS. (kg/cm2g)	TEMP. (°C)
	THICK.	25	DESIGN	6.3	60
			OPERATING	4.7	AMB

AREA W14
UNIT RFA
REF. PLAN DWG. CJ-M15W14-PI-A30-R10009-A
REF. P & ID CJ-M15W14-PR-A20-000104

REV. NO.	DATE	DESCRIPTION	BY	CHK	APP'D
1	25.03.31	REVISED AS MARKED	황래종	안남후	박동영
0	25.01.24	APPROVED FOR CONSTRUCTION	황래종	안남후	박동영

CLIENT SK hynix 17
CONTRACTOR SK ecoplant
PROJECT NAME M15X Ph4 Project
COMMODITY PAC
JOB NO. 22330D
LINE NO. OD32-PAC-HP2-E-6556
SH'T NO. 01 / 01
REV. 1

경고 : 본 도면은 SK HYNIX의 기업비밀 자료로서, 어떠한 경우에도 목적 외 사용, 복제, 제3자에게 공개, 누설 및 유출할 수 없으며, 회사는 유포자의 불법 사용으로 피해가 발생할 경우 유포자에게 민/형사상 책임을 요구할 수 있음.

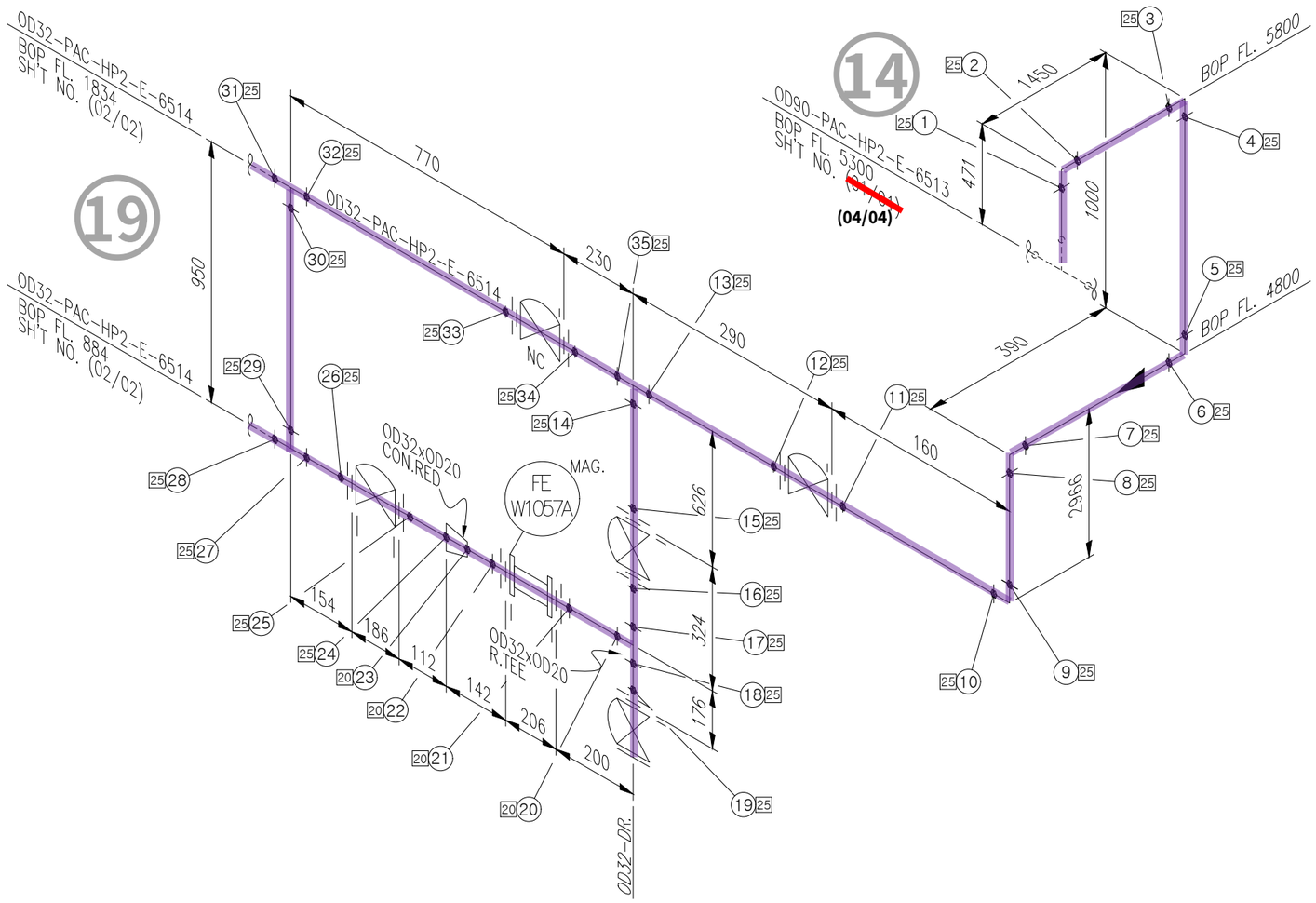

ITEM	SIZE	Q'TY	DESCRIPTION
		HP2	
P	OD32	10.3M	PIPE, HDPE PE100, PE, SOCKET FUSION, PN16/SDR11
P	OD20	0.6M	PIPE, HDPE PE100, PE, SOCKET FUSION, PN16/SDR11
E90	OD32	5EA	ELBOW 90 DEG, HDPE PE100, PE, SOCKET FUSION,
			PN16/SDR11
T	OD32	3EA	TEE EQUAL, HDPE PE100, PE, SOCKET FUSION, PN16/SDR11
TR	OD32xOD20	1EA	TEE RED, HDPE PE100, PE, SOCKET FUSION, PN16/SDR11
RC	OD32xOD20	1EA	REDUCER CON, HDPE PE100, PE, SOCKET FUSION,
			PN16/SDR11
VD	OD32	5EA	DIAPHRAGM VALVE, KS 10K, FF FLG'D, BODY-PP /
			TRIM-EPDM+PTFE DIAPHRAGM, BB, HANDWHEEL
F	OD32	9EA	FLG LAP JOINT / STUB END SET, KS 10K, FF,
			LAP JOINT-STS304 / STUB END-HDPE PE100
F	OD20	2EA	FLG LAP JOINT / STUB END SET, KS 10K, FF,
			LAP JOINT-STS304 / STUB END-HDPE PE100
FB	OD32	1EA	FLG BLIND & LINER SET, KS 10K, FF, BLIND-STS304
			/ LINDER-HDPE PE100 (MIN 5.0MM TH'K)
G	OD32	9EA	GASKET, KS 10K, FF, PTFE+EPDM, 3.0MM TH'K
G	OD20	2EA	GASKET, KS 10K, FF, PTFE+EPDM, 3.0MM TH'K
G2	OD32	1EA	GASKET, KS 10K, FF, PTFE+EPDM, BLIND, 3.0MM TH'K
B1	OD32	10SET	MACHINE BOLT & NYLON NUTS :STS 304 / W WASHERS
B1	OD20	2SET	MACHINE BOLT & NYLON NUTS :STS 304 / W WASHERS
LOTO	OD32	1EA	LOTO
INC	25tXOD32	10.3M	관 보온재(고무발포) + 알루미늄 CASING
INC	25tXOD20	0.6M	관 보온재(고무발포) + 알루미늄 CASING

<NOTE>
1. (*) FIELD ADJUST

* PIPE : P/P1 * 90° ELBOW : E90 * 45° ELBOW : E45 * TEE : T * RED.TEE : TR * STUB-IN : STU * REINFORCING PAD : RP * CON.RED : RC * ECC.RED : RE * CON.SWAGE : RCS/RCS1 * ECC.SWAGE : RES/RES1 * NIPPLE : NP/NP1/NP2 * CAP : CAP/CAP1 * PLUG : PLG * FULL COUPLING : FC * HALF COUPLING : HF/HF1
* STUB-IN : STU * SOCKET(HDPE/PVC) : SC * SADDLE(HDPE) : SD * FLANGE : F/F1 * GASKET : G/G1/G2 * BOLT & NUT : B/B1 * BLIND FLANGE : FB/FB1 * GATE VA. : VG/VG1/VG2 * BALL VA. : VB/VBL0/VB1/VB1L0/VB2/VB2L0 * BUTTERFLY VA. : VF/VF4 * CHECK VA. : VC/VC1/VC2/VC3/VC4/VC5/VC6/VC7
* GLOBE VA. : VL/VL1/VL2 * DIAPHRAGM VA. : VD/VDL0 * DAMPER : VP * QUICK COUPLING : SQC * FLEXIBLE JOINT(STEEL) : FLXB * FLEXIBLE JOINT(RUBBER) : FLXR * FLEXIBLE JOINT(STEEL_PTFE LINED) : FLXL * FLEXIBLE HOSE : FLXH * STEAM TRAP : ST * SPRAY NOZZLE : SPN * EMERGENCY SHOWER : SSH
* STRAINER(Y-TYPE) : YSTR * STRAINER(T-TYPE) : TSTR * STRAINER(BUCKET-TYPE) : BSTR * ANCHOR PLATE : STOP * BIRD SCREEN : BS * ISOLATION KIT : IK * UNLOADING BOX : UB * AIR TRAP : AT * LOTO : LOTO * SIGHT GLASS : SG * PRESSURE GAUGE : PG * SHILED : SH * SPECIAL BOLT & NUT : BL/BL1

INSULATION	CODE	E	CONDITION	PRESS. (kg/cm2g)	TEMP. (°C)
	THICK.	25	DESIGN	6.3	60
			OPERATING	4.7	AMB

AREA W14
UNIT RFA
REF. PLAN DWG. CJ-M15W14-PI-A30-R10008-B
REF. P & ID CJ-M15W14-PR-A20-000102

REV. NO.	DATE	DESCRIPTION	BY	CHK	APP'D
1	25.03.31	REVISED AS MARKED	황래종	안남후	박동영
0	25.01.24	APPROVED FOR CONSTRUCTION	황래종	안남후	박동영

CLIENT SK hynix

CONTRACTOR SK ecoplant

PROJECT NAME M15X Ph4 Project

COMMODITY PAC

JOB NO. 22330D

LINE NO. 0D32-PAC-HP2-E-6514

SH'T NO. 01 / 02

REV. 1

경고 : 본 도면은 SK HYNIX의 기업비밀 자료로서, 어떠한 경우에도 목적 외 사용, 복제, 제3자에게 공개, 누설 및 유출할 수 없으며, 회사는 유포자의 불법 사용으로 피해가 발생할 경우 유포자에게 민/형사상 책임을 요구할 수 있음.

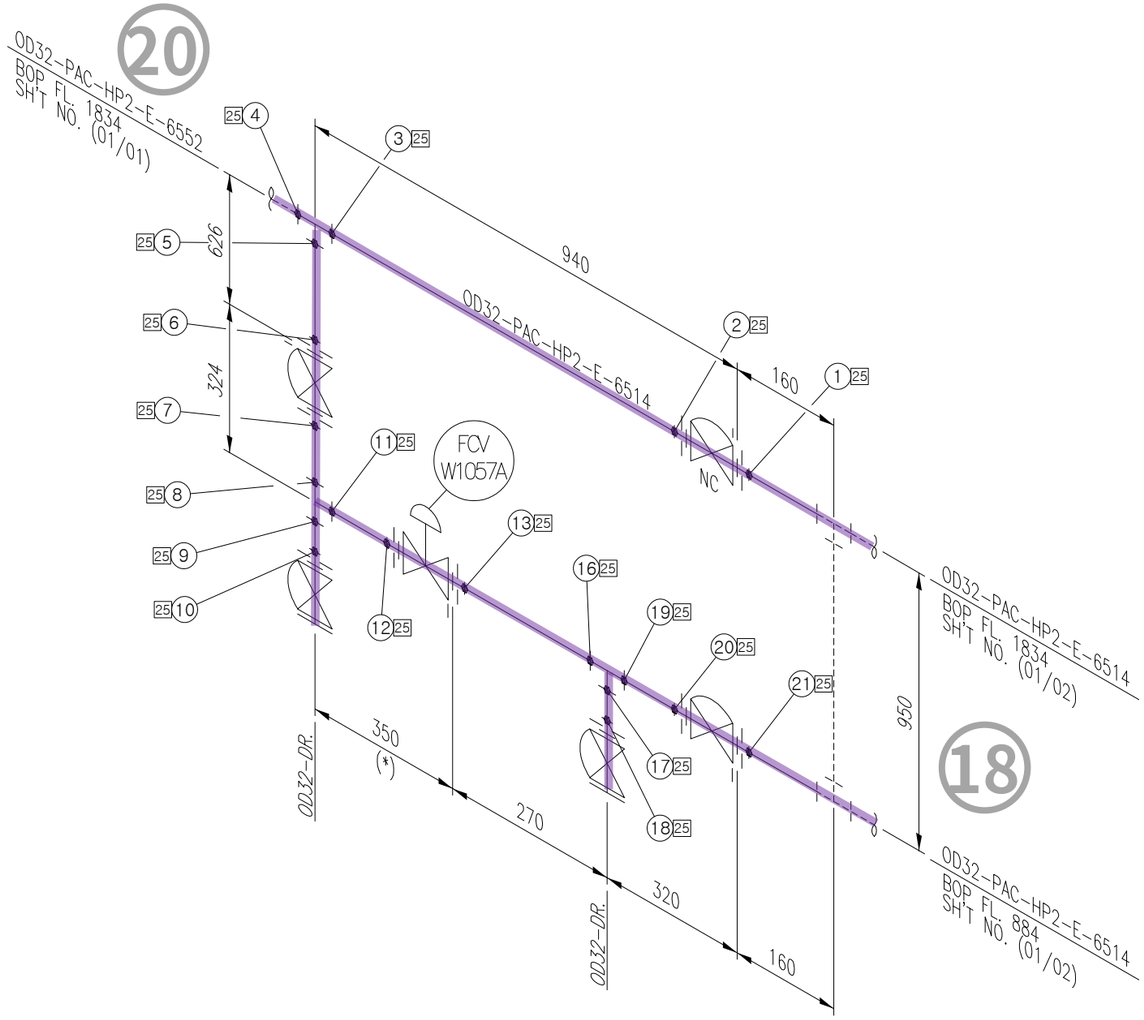

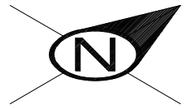

SK ecoplant

ITEM	SIZE	Q'TY	DESCRIPTION
		HP2	
P	OD32	3.2M	PIPE, HDPE PE100, PE, SOCKET FUSION, PN16/SDR11
~~P~~	~~OD25~~	~~0.6M~~	~~PIPE, HDPE PE100, PE, SOCKET FUSION, PN16/SDR11~~
T	OD32	2EA	TEE EQUAL, HDPE PE100, PE, SOCKET FUSION, PN16/SDR11
~~TR~~	~~OD32xOD25~~	1EA	TEE RED, ~~HDPE PE100, PE, SOCKET FUSION,~~ PN16/SDR11
~~RC~~	~~OD32xOD25~~	1EA	REDUCER CON, ~~HDPE PE100, PE, SOCKET~~ FUSION,
			PN16/SDR11
VD	OD32	5EA	DIAPHRAGM VALVE, KS 10K, FF FLG'D, BODY-PP /
			TRIM-EPDM+PTFE DIAPHRAGM, BB, HANDWHEEL
F	OD32	10EA	FLG LAP JOINT / STUB END SET, KS 10K, FF,
			LAP JOINT-STS304 / STUB END-HDPE PE100
~~F~~	~~OD25~~	2EA	FLG LAP ~~JOINT / STUB END SET,~~ KS 10K, FF,
			LAP JOINT-STS304 ~~/ STUB END-~~HDPE PE100
FB	OD32	2EA	FLG BLIND & LINER SET, KS 10K, FF, BLIND-STS304
			/ LINDER-HDPE PE100 (MIN 5.0MM TH'K)
G	OD32	10EA	GASKET, KS 10K, FF, PTFE+EPDM, 3.0MM TH'K
~~G~~	~~OD25~~	~~2EA~~	~~GASKET, KS 10K, FF, PTFE+EPDM, 3.0MM TH'K~~
G2	OD32	2EA	GASKET, KS 10K, FF, PTFE+EPDM, BLIND, 3.0MM TH'K
B1	OD32	12SET	MACHINE BOLT & NYLON NUTS :STS 304 / W WASHERS
~~B1~~	~~OD25~~	~~2SET~~	~~MACHINE BOLT & NYLON NUTS :STS 304 / W WASHERS~~
LOTO	OD32	1EA	LOTO
INC	25tXOD32	3.2M	관 보온재(고무발포) + 알루미늄 CASING
~~INC~~	~~25tXOD25~~	~~0.6M~~	~~관 보온재(고무발포) + 알루미늄 CASING~~

<NOTE>
1. (*) FIELD ADJUST

* PIPE : P/P1 * 90° ELBOW : E90 * 45° ELBOW : E45 * TEE : T * RED.TEE : TR * STUB-IN : STU * REINFORCING PAD : RP * CON.RED : RC * ECC.RED : RE * CON.SWAGE : RCS/RCS1 * ECC.SWAGE : RES/RES1 * NIPPLE : NP/NP1/NP2 * CAP : CAP/CAP1 * PLUG : PLG * FULL COUPLING : FC * HALF COUPLING : HF/HF1
* STUB-IN : STU * SOCKET(HDPE/PVC) : SC * SADDLE(HDPE) : SD * FLANGE : F/F1 * GASKET : G/G1/G2 * BOLT & NUT : B/B1 * BLIND FLANGE : FB/FB1 * GATE VA. : VG/VG1/VG2 * BALL VA. : VB/VBLO/VB1/VB1LO/VB2/VB2LO * BUTTERFLY VA. : VF/VF4 * CHECK VA. : VC/VC1/VC2/VC3/VC4/VC5/VC6/VC7
* GLOBE VA. : VL/VL1/VL2 * DIAPHRAGM VA. : VD/VDLO * DAMPER : VP * QUICK COUPLING : SQC * FLEXIBLE JOINT(STEEL) : FLXB * FLEXIBLE JOINT(RUBBER) : FLXR * FLEXIBLE JOINT(STEEL_PTFE LINED) : FLXL * FLEXIBLE HOSE : FLXH * STEAM TRAP : ST * SPRAY NOZZLE : SPN * EMERGENCY SHOWER : SSH
* STRAINER(Y-TYPE) : YSTR * STRAINER(T-TYPE) : TSTR * STRAINER(BUCKET-TYPE) : BSTR * ANCHOR PLATE : STOP * BIRD SCREEN : BS * ISOLATION KIT : IK * UNLOADING BOX : UB * AIR TRAP : AT * LOTO : LOTO * SIGHT GLASS : SG * PRESSURE GAUGE : PG * SHILED : SH * SPECIAL BOLT & NUT : BL/BL1

CLIENT SK hynix

19

INSULATION	CODE	E	CONDITION	PRESS. (kg/cm2g)	TEMP. (°C)
	THICK.	25	DESIGN	6.3	60
			OPERATING	4.7	AMB

AREA W14
UNIT RFA
REF. PLAN DWG. CJ-M15W14-PI-A30-R10008-A
REF. P & ID CJ-M15W14-PR-A20-000102

REV. NO.	DATE	DESCRIPTION	BY	CHK	APP'D
1	25.03.31	REVISED AS MARKED	황래종	안남후	박동영
0	25.01.24	APPROVED FOR CONSTRUCTION	황래종	안남후	박동영

CONTRACTOR SK ecoplant
COMMODITY PAC
LINE NO. OD32-PAC-HP2-E-6514

PROJECT NAME M15X Ph4 Project
JOB NO. 22330D
SH'T NO. 02 / 02
REV. 1

경고 : 본 도면은 SK HYNIX의 기업비밀 자료로서, 어떠한 경우에도 목적 외 사용, 복제, 제3자에게 공개, 누설 및 유출할 수 없으며, 회사는 유포자의 불법 사용으로 피해가 발생할 경우 유포자에게 민/형사상 책임을 요구할 수 있음.

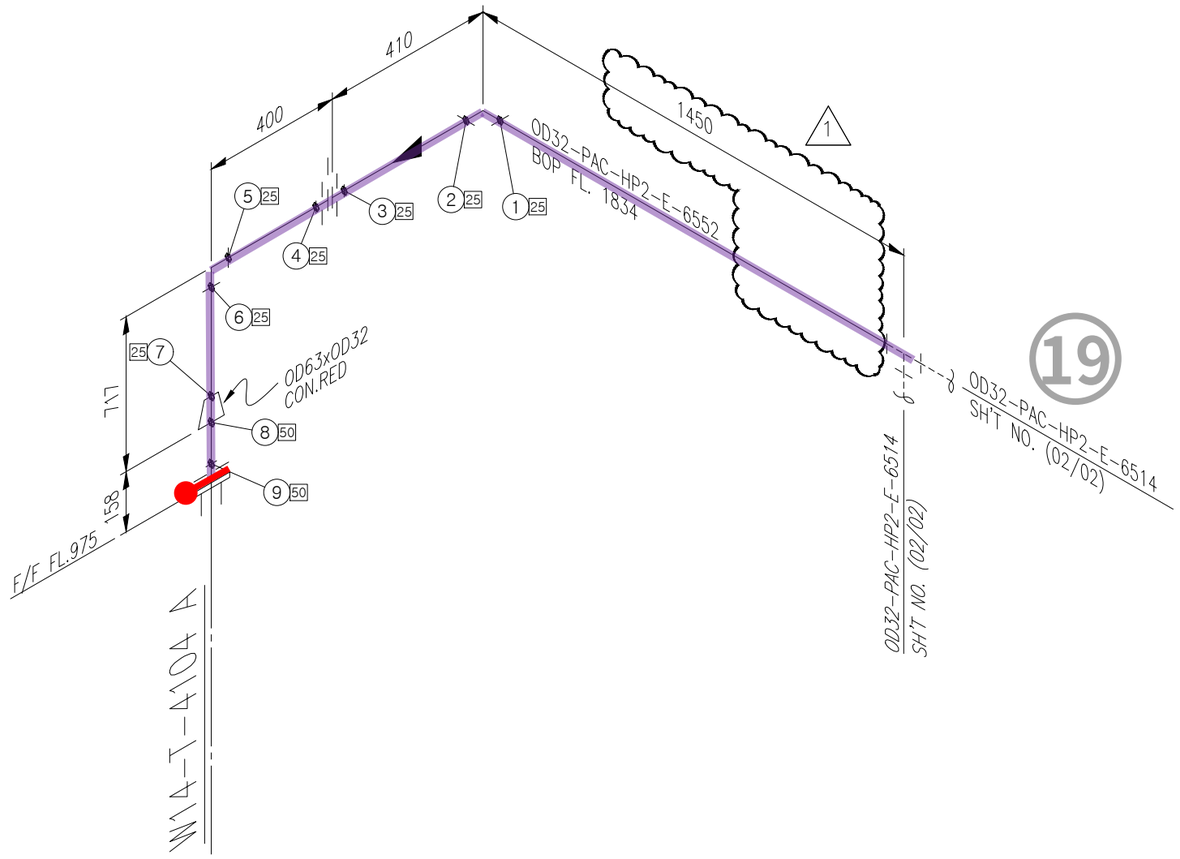

<NOTE>
1. (*) FIELD ADJUST

ITEM	SIZE	Q'TY	DESCRIPTION
		HP2	
P	OD63	0.2M	PIPE, HDPE PE100, PE, SOCKET FUSION, PN16/SDR11
P	OD32	3.0M	PIPE, HDPE PE100, PE, SOCKET FUSION, PN16/SDR11
E90	OD32	2EA	ELBOW 90 DEG, HDPE PE100, PE, SOCKET FUSION,
			PN16/SDR11
RC	OD63xOD32	1EA	REDUCER CON, HDPE PE100, PE, SOCKET FUSION,
			PN16/SDR11
1			
			TRIM-EPDM+PTFE DIAPHRAGM, BB, HANDWHEEL
F	OD63	1EA	FLG LAP JOINT / STUB END SET, KS 10K, FF,
			LAP JOINT-STS304 / STUB END-HDPE PE100
F	OD32	1 2EA	FLG LAP JOINT / STUB END SET, KS 10K, FF,
			LAP JOINT-STS304 / STUB END-HDPE PE100
G	OD63	1EA	GASKET, KS 10K, FF, PTFE+EPDM, 3.0MM TH'K
G	OD32	1 1EA	GASKET, KS 10K, FF, PTFE+EPDM, 3.0MM TH'K
B	OD63	1SET	MACHINE BOLT & NUTS :STS 304 / W WASHERS
B	OD32	1 1EA	MACHINE BOLT & NUTS :STS 304 / W WASHERS
INC	25tXOD63	0.2M	관 보온재(고무발포) + 알루미늄 CASING
1 INC	25tXOD32	2.9M	관 보온재(고무발포) + 알루미늄 CASING

* PIPE : P/P1 * 90° ELBOW : E90 * 45° ELBOW : E45 * TEE : T * RED.TEE : TR * STUB-IN : STU * REINFORCING PAD : RP * CON.RED : RC * ECC.RED : RE * CON.SWAGE : RCS/RCS1 * ECC.SWAGE : RES/RES1 * NIPPLE : NP/NP1/NP2 * CAP : CAP/CAP1 * PLUG : PLG * FULL COUPLING : FC * HALF COUPLING : HF/HF1
* STUB-IN : STU * SOCKET(HDPE/PVC) : SC * SADDLE(HDPE) : SD * FLANGE : F/F1 * GASKET : G/G1/G2 * BOLT & NUT : B/B1 * BLIND FLANGE : FB/FB1 * GATE VA. : VG/VG1/VG2 * BALL VA. : VB/VBLO/VB1/VB1LO/VB2/VB2LO * BUTTERFLY VA. : VF/VF4 * CHECK VA. : VC/VC1/VC2/VC3/VC4/VC5/VC6/VC7
* GLOBE VA. : VL/VL1/VL2 * DIAPHRAGM VA. : VD/VDLO * DAMPER : VP * QUICK COUPLING : SQC * FLEXIBLE JOINT(STEEL) : FLXB * FLEXIBLE JOINT(RUBBER) : FLXR * FLEXIBLE JOINT(STEEL_PTFE LINED) : FLXL * FLEXIBLE HOSE : FLXH * STEAM TRAP : ST * SPRAY NOZZLE : SPN * EMERGENCY SHOWER : SSH
* STRAINER(Y-TYPE) : YSTR * STRAINER(T-TYPE) : TSTR * STRAINER(BUCKET-TYPE) : BSTR * ANCHOR PLATE : STOP * BIRD SCREEN : BS * ISOLATION KIT : IK * UNLOADING BOX : UB * AIR TRAP : AT * LOTO : LOTO * SIGHT GLASS : SG * PRESSURE GAUGE : PG * SHILED : SH * SPECIAL BOLT & NUT : BL/BL1

CLIENT SK hynix 20

INSULATION	CODE	E	CONDITION	PRESS. (kg/cm2g)	TEMP. (°C)
	THICK.	25	DESIGN	6.3	60
			OPERATING	4.7	AMB

AREA W14
UNIT RFA
REF. PLAN DWG. CJ-M15W14-PI-A30-R10008-A
REF. P & ID CJ-M15W14-PR-A20-000102

REV. NO.	DATE	DESCRIPTION	BY	CHK	APP'D
1	25.03.31	REVISED AS MARKED	황래종	안남후	박동영
0	24.01.24	APPROVED FOR CONSTRUCTION	황래종	안남후	박동영

CONTRACTOR SK ecoplant
COMMODITY PAC
LINE NO. OD32-PAC-HP2-E-6552
PROJECT NAME M15X Ph4 Project
JOB NO. 22330D
SH'T NO. 01 / 01
REV. 1

경고 : 본 도면은 SK HYNIX의 기업비밀 자료로서, 어떠한 경우에도 목적 외 사용, 복제, 제3자에게 공개, 누설 및 유출할 수 없으며, 회사는 유포자의 불법 사용으로 피해가 발생할 경우 유포자에게 민/형사상 책임을 요구할 수 있음.

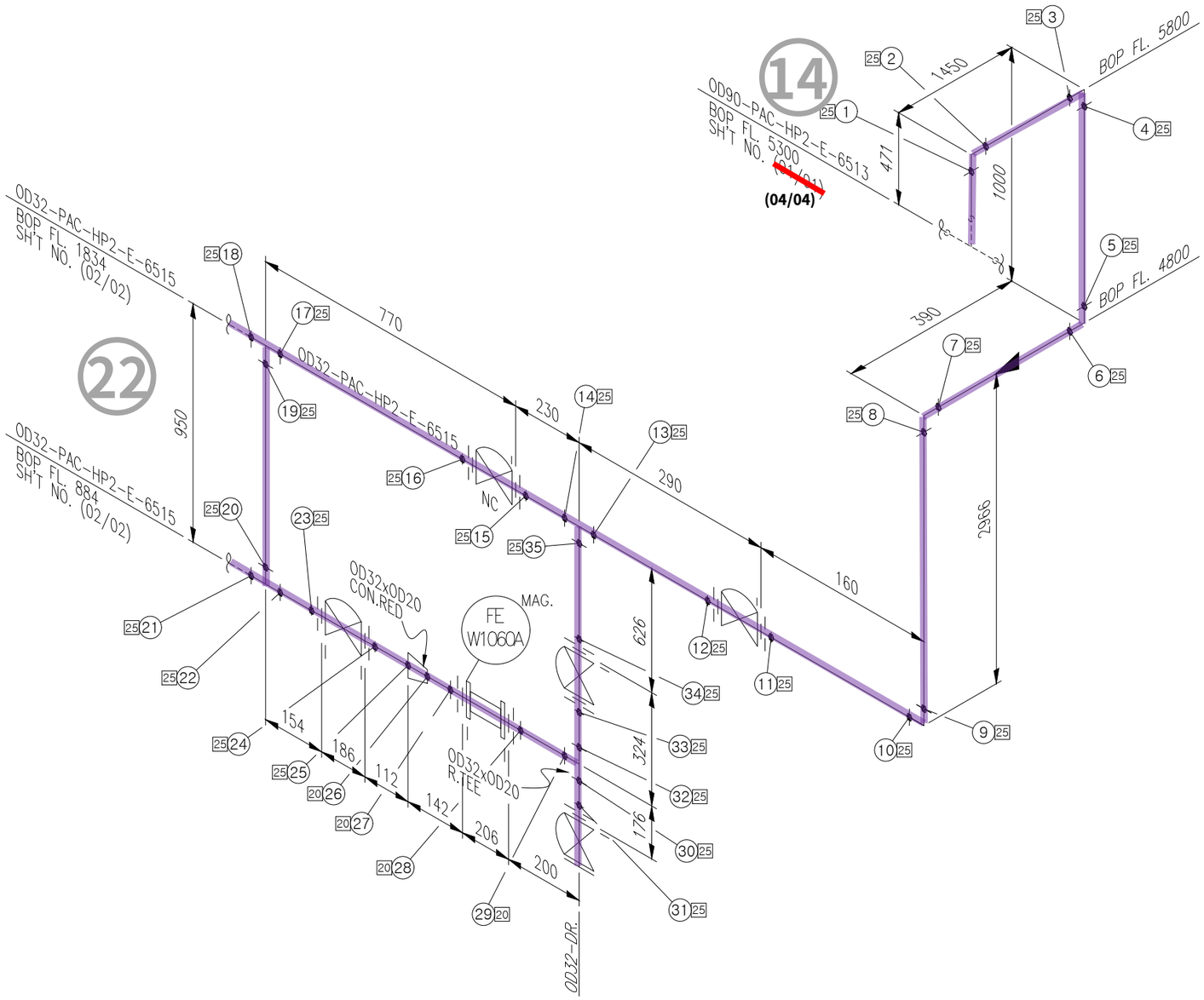

<NOTE>
1. (*) FIELD ADJUST

ITEM	SIZE	Q'TY	DESCRIPTION
		HP2	
P	OD32	10.3M	PIPE, HDPE PE100, PE, SOCKET FUSION, PN16/SDR11
P	OD20	0.6M	PIPE, HDPE PE100, PE, SOCKET FUSION, PN16/SDR11
E90	OD32	5EA	ELBOW 90 DEG, HDPE PE100, PE, SOCKET FUSION,
			PN16/SDR11
T	OD32	3EA	TEE EQUAL, HDPE PE100, PE, SOCKET FUSION, PN16/SDR11
TR	OD32xOD20	1EA	TEE RED, HDPE PE100, PE, SOCKET FUSION, PN16/SDR11
RC	OD32xOD20	1EA	REDUCER CON, HDPE PE100, PE, SOCKET FUSION,
			PN16/SDR11
VD	OD32	5EA	DIAPHRAGM VALVE, KS 10K, FF FLG'D, BODY-PP /
			TRIM-EPDM+PTFE DIAPHRAGM, BB, HANDWHEEL
F	OD32	9EA	FLG LAP JOINT / STUB END SET, KS 10K, FF,
			LAP JOINT-STS304 / STUB END-HDPE PE100
F	OD20	2EA	FLG LAP JOINT / STUB END SET, KS 10K, FF,
			LAP JOINT-STS304 / STUB END-HDPE PE100
FB	OD32	1EA	FLG BLIND & LINER SET, KS 10K, FF, BLIND-STS304
			/ LINDER-HDPE PE100 (MIN 5.0MM TH'K)
G	OD32	9EA	GASKET, KS 10K, FF, PTFE+EPDM, 3.0MM TH'K
G	OD20	2EA	GASKET, KS 10K, FF, PTFE+EPDM, 3.0MM TH'K
G2	OD32	1EA	GASKET, KS 10K, FF, PTFE+EPDM, BLIND, 3.0MM TH'K
B1	OD32	10SET	MACHINE BOLT & NYLON NUTS :STS 304 / W WASHERS
B1	OD20	2SET	MACHINE BOLT & NYLON NUTS :STS 304 / W WASHERS
LOTO	OD32	1EA	LOTO
INC	25tXOD32	10.3M	관 보온재(고무발포) + 알루미늄 CASING
INC	25tXOD20	0.6M	관 보온재(고무발포) + 알루미늄 CASING

* PIPE : P/P1 * 90° ELBOW : E90 * 45° ELBOW : E45 * TEE : T * RED.TEE : TR * STUB-IN : STU * REINFORCING PAD : RP * CON.RED : RC * ECC.RED : RE * CON.SWAGE : RCS/RCS1 * ECC.SWAGE : RES/RES1 * NIPPLE : NP/NP1/NP2 * CAP : CAP/CAP1 * PLUG : PLG * FULL COUPLING : FC * HALF COUPLING : HF/HF1
* STUB-IN : STU * SOCKET(HDPE/PVC) : SC * SADDLE(HDPE) : SD * FLANGE : F/F1 * GASKET : G/G1/G2 * BOLT & NUT : B/B1 * BLIND FLANGE : FB/FB1 * GATE VA. : VG/VG1/VG2 * BALL VA. : VB/VBL0/VB1/VB1L0/VB2/VB2L0 * BUTTERFLY VA. : VF/VF4 * CHECK VA. : VC/VC1/VC2/VC3/VC4/VC5/VC6/VC7
* GLOBE VA. : VL/VL1/VL2 * DIAPHRAGM VA. : VD/VDL0 * DAMPER : VP * QUICK COUPLING : SQC * FLEXIBLE JOINT(STEEL) : FLXB * FLEXIBLE JOINT(RUBBER) : FLXR * FLEXIBLE JOINT(STEEL_PTFE LINED) : FLXL * FLEXIBLE HOSE : FLXH * STEAM TRAP : ST * SPRAY NOZZLE : SPN * EMERGENCY SHOWER : SSH
* STRAINER(Y-TYPE) : YSTR * STRAINER(T-TYPE) : TSTR * STRAINER(BUCKET-TYPE) : BSTR * ANCHOR PLATE : STOP * BIRD SCREEN : BS * ISOLATION KIT : IK * UNLOADING BOX : UB * AIR TRAP : AT * LOTO : LOTO * SIGHT GLASS : SG * PRESSURE GAUGE : PG * SHILED : SH * SPECIAL BOLT & NUT : BL/BL1

CLIENT SK hynix 21

INSULATION	CODE	E	CONDITION	PRESS. (kg/cm2g)	TEMP. (°C)
	THICK.	25	DESIGN	6.3	60
			OPERATING	4.7	AMB

AREA W14
UNIT RFA
REF. PLAN DWG. CJ-M15W14-PI-A30-R10008-B
REF. P & ID CJ-M15W14-PR-A20-000103

REV. NO.	DATE	DESCRIPTION	BY	CHK	APP'D
1	25.03.31	REVISED AS MARKED	황래종	안남후	박동영
0	25.01.24	APPROVED FOR CONSTRUCTION	황래종	안남후	박동영

CONTRACTOR SK ecoplant
PROJECT NAME M15X Ph4 Project
COMMODITY PAC
JOB NO. 22330D
LINE NO. OD32-PAC-HP2-E-6515
SH'T NO. 01 / 02
REV. 0

경고 : 본 도면은 SK HYNIX의 기업비밀 자료로서, 어떠한 경우에도 목적 외 사용, 복제, 제3자에게 공개, 누설 및 유출할 수 없으며, 회사는 유포자의 불법 사용으로 피해가 발생할 경우 유포자에게 민/형사상 책임을 요구할 수 있음.

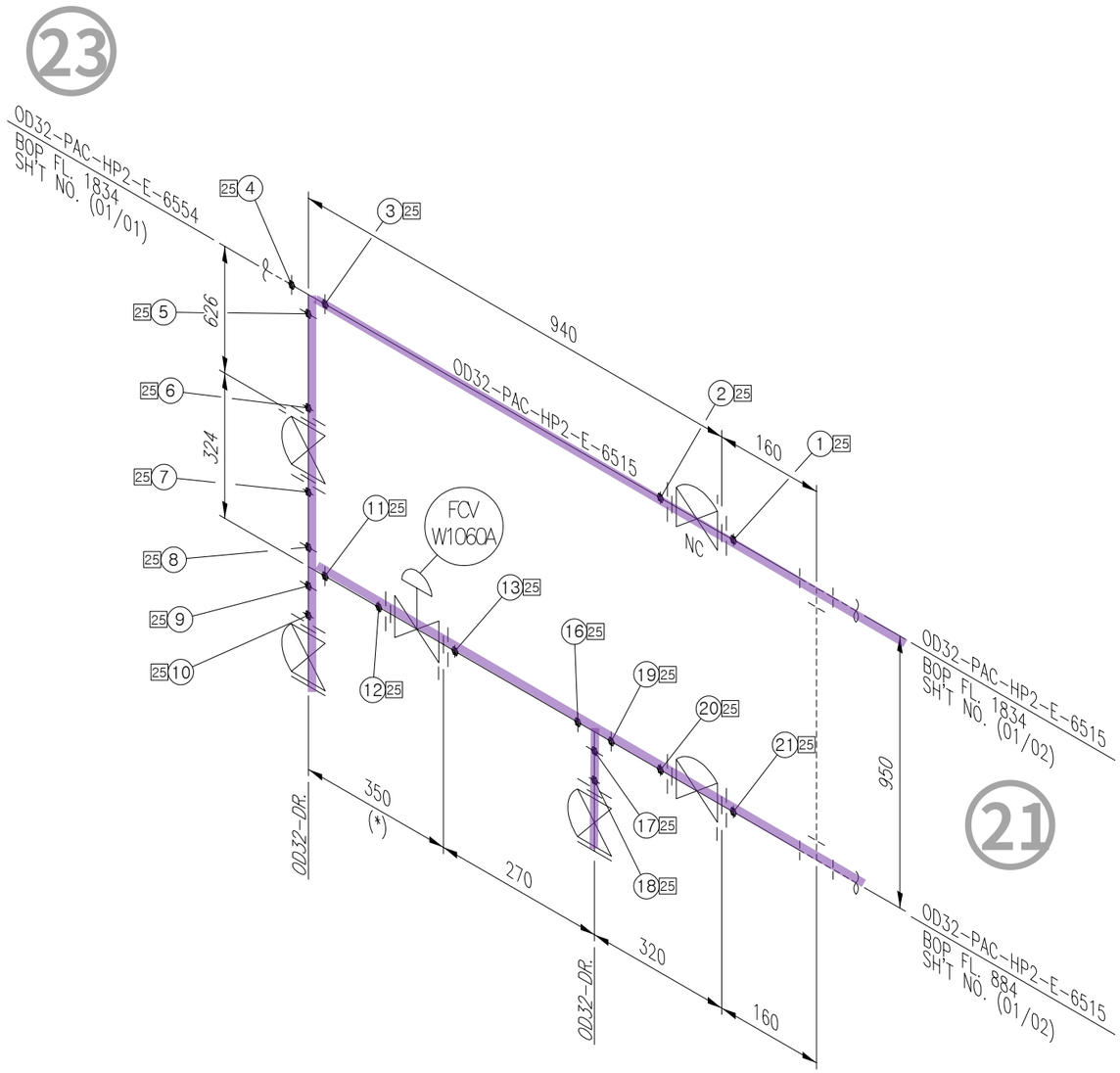

ITEM	SIZE	Q'TY	DESCRIPTION
		HP2	
P	OD32	3.2M	PIPE, HDPE PE100, PE, SOCKET FUSION, PN16/SDR11
~~P~~	~~OD25~~	~~0.6M~~	~~PIPE, HDPE PE100, PE, SOCKET FUSION, PN16/SDR11~~
T	OD32	2EA	TEE EQUAL, HDPE PE100, PE, SOCKET FUSION, PN16/SDR11
~~TR~~	~~OD32xOD25~~	1EA	TEE RED, ~~HDPE PE100, PE, SOCKET FUSION,~~ PN16/SDR11
RC	~~OD32xOD25~~	1EA	REDUCER CON, ~~HDPE PE100, PE, SOCKET~~ FUSION,
			PN16/SDR11
VD	OD32	5EA	DIAPHRAGM VALVE, KS 10K, FF FLG'D, BODY-PP /
			TRIM-EPDM+PTFE DIAPHRAGM, BB, HANDWHEEL
F	OD32	10EA	FLG LAP JOINT / STUB END SET, KS 10K, FF,
			LAP JOINT-STS304 / STUB END-HDPE PE100
~~F~~	~~OD25~~	2EA	FLG LAP ~~JOINT / STUB END SET,~~ KS 10K, FF,
			LAP JOINT-STS304 ~~/ STUB END-~~HDPE PE100
FB	OD32	2EA	FLG BLIND & LINER SET, KS 10K, FF, BLIND-STS304
			/ LINDER-HDPE PE100 (MIN 5.0MM TH'K)
G	OD32	10EA	GASKET, KS 10K, FF, PTFE+EPDM, 3.0MM TH'K
~~G~~	~~OD25~~	~~2EA~~	~~GASKET, KS 10K, FF,~~ PTFE+EPDM, 3.0MM TH'K
G2	OD32	2EA	GASKET, KS 10K, FF, PTFE+EPDM, BLIND, 3.0MM TH'K
B1	OD32	12SET	MACHINE BOLT & NYLON NUTS :STS 304 / W WASHERS
~~B1~~	~~OD25~~	~~2SET~~	~~MACHINE BOLT & NYLON NUTS~~ :STS 304 / W WASHERS
LOTO	OD32	1EA	LOTO
INC	25tXOD32	3.2M	관 보온재(고무발포) + 알루미늄 CASING
~~INC~~	~~25tXOD25~~	~~0.6M~~	~~관 보온재(고무발포) + 알루미늄 CASING~~

<NOTE>
1. (*) FIELD ADJUST

* PIPE : P/P1 * 90° ELBOW : E90 * 45° ELBOW : E45 * TEE : T * RED.TEE : TR * STUB-IN : STU * REINFORCING PAD : RP * CON.RED : RC * ECC.RED : RE * CON.SWAGE : RCS/RCS1 * ECC.SWAGE : RES/RES1 * NIPPLE : NP/NP1/NP2 * CAP : CAP/CAP1 * PLUG : PLG * FULL COUPLING : FC * HALF COUPLING : HF/HF1
* STUB-IN : STU * SOCKET(HDPE/PVC) : SC * SADDLE(HDPE) : SD * FLANGE : F/F1 * GASKET : G/G1/G2 * BOLT & NUT : B/B1 * BLIND FLANGE : FB/FB1 * GATE VA. : VG/VG1/VG2 * BALL VA. : VB/VBLO/VB1/VB1LO/VB2/VB2LO * BUTTERFLY VA. : VF/VF4 * CHECK VA. : VC/VC1/VC2/VC3/VC4/VC5/VC6/VC7
* GLOBE VA. : VL/VL1/VL2 * DIAPHRAGM VA. : VD/VDLO * DAMPER : VP * QUICK COUPLING : SQC * FLEXIBLE JOINT(STEEL) : FLXB * FLEXIBLE JOINT(RUBBER) : FLXR * FLEXIBLE JOINT(STEEL_PTFE LINED) : FLXL * FLEXIBLE HOSE : FLXH * STEAM TRAP : ST * SPRAY NOZZLE : SPN * EMERGENCY SHOWER : SSH
* STRAINER(Y-TYPE) : YSTR * STRAINER(T-TYPE) : TSTR * STRAINER(BUCKET-TYPE) : BSTR * ANCHOR PLATE : STOP * BIRD SCREEN : BS * ISOLATION KIT : IK * UNLOADING BOX : UB * AIR TRAP : AT * LOTO : LOTO * SIGHT GLASS : SG * PRESSURE GAUGE : PG * SHILED : SH * SPECIAL BOLT & NUT : BL/BL1

CLIENT SK hynix 22

INSULATION	CODE	E	CONDITION	PRESS. (kg/cm2g)	TEMP. (°C)
	THICK.	25	DESIGN	6.3	60
			OPERATING	4.7	AMB

AREA W14
UNIT RFA
REF. PLAN DWG. CJ-M15W14-PI-A30-R10008-A
REF. P & ID CJ-M15W14-PR-A20-000103

REV. NO.	DATE	DESCRIPTION	BY	CHK	APP'D
1	25.03.31	REVISED AS MARKED	황래종	안남후	박동영
0	25.01.24	APPROVED FOR CONSTRUCTION	황래종	안남후	박동영

CONTRACTOR SK ecoplant
PROJECT NAME M15X Ph4 Project
COMMODITY PAC
JOB NO. 22330D
LINE NO. OD32-PAC-HP2-E-6515
SH'T NO. 02 / 02
REV. 1

경고 : 본 도면은 SK HYNIX의 기업비밀 자료로서, 어떠한 경우에도 목적 외 사용, 복제, 제3자에게 공개, 누설 및 유출할 수 없으며, 회사는 유포자의 불법 사용으로 피해가 발생할 경우 유포자에게 민/형사상 책임을 요구할 수 있음.

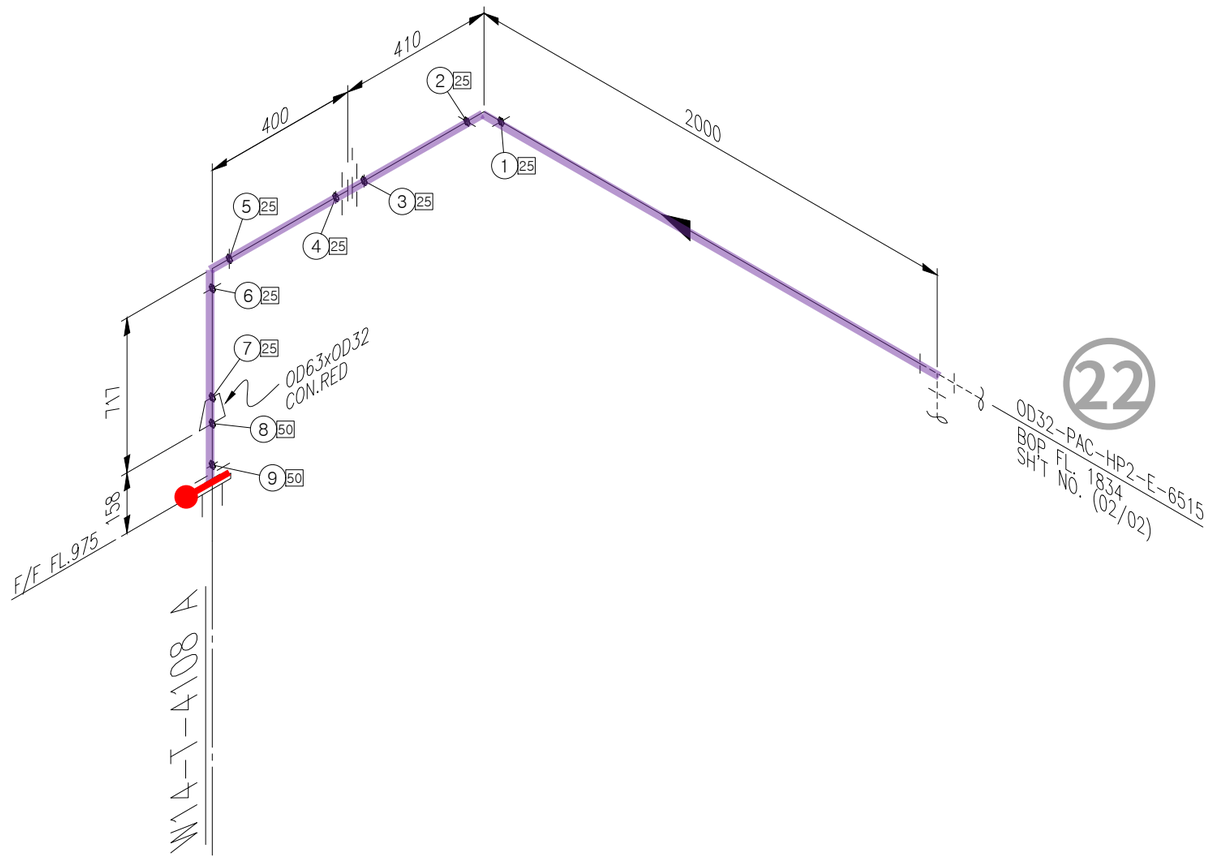

<NOTE>
1. (*) FIELD ADJUST

ITEM	SIZE	Q'TY	DESCRIPTION
		HP2	
P	OD63	0.2M	PIPE, HDPE PE100, PE, SOCKET FUSION, PN16/SDR11
P	OD32	2.9M	PIPE, HDPE PE100, PE, SOCKET FUSION, PN16/SDR11
E90	OD32	2EA	ELBOW 90 DEG, HDPE PE100, PE, SOCKET FUSION,
			PN16/SDR11
RC	OD63xOD32	1EA	REDUCER CON, HDPE PE100, PE, SOCKET FUSION,
			PN16/SDR11
F	OD63	1EA	FLG LAP JOINT / STUB END SET, KS 10K, FF,
			LAP JOINT-STS304 / STUB END-HDPE PE100
F	OD32	2EA	FLG LAP JOINT / STUB END SET, KS 10K, FF,
			LAP JOINT-STS304 / STUB END-HDPE PE100
G	OD63	1EA	GASKET, KS 10K, FF, PTFE+EPDM, 3.0MM TH'K
G	OD32	1EA	GASKET, KS 10K, FF, PTFE+EPDM, 3.0MM TH'K
B	OD63	1SET	MACHINE BOLT & NUTS :STS 304 / W WASHERS
B	OD32	1SET	MACHINE BOLT & NUTS :STS 304 / W WASHERS
INC	25tXOD63	0.2M	관 보온재(고무발포) + 알루미늄 CASING
INC	25tXOD32	2.9M	관 보온재(고무발포) + 알루미늄 CASING

* PIPE : P/P1 * 90° ELBOW : E90 * 45° ELBOW : E45 * TEE : T * RED.TEE : TR * STUB-IN : STU * REINFORCING PAD : RP * CON.RED : RC * ECC.RED : RE * CON.SWAGE : RCS/RCS1 * ECC.SWAGE : RES/RES1 * NIPPLE : NP/NP1/NP2 * CAP : CAP/CAP1 * PLUG : PLG * FULL COUPLING : FC * HALF COUPLING : HF/HF1
* STUB-IN : STU * SOCKET(HDPE/PVC) : SC * SADDLE(HDPE) : SD * FLANGE : F/F1 * GASKET : G/G1/G2 * BOLT & NUT : B/B1 * BLIND FLANGE : FB/FB1 * GATE VA. : VG/VG1/VG2 * BALL VA. : VB/VBL0/VB1/VB1L0/VB2/VB2L0 * BUTTERFLY VA. : VF/VF4 * CHECK VA. : VC/VC1/VC2/VC3/VC4/VC5/VC6/VC7
* GLOBE VA. : VL/VL1/VL2 * DIAPHRAGM VA. : VD/VDL0 * DAMPER : VP * QUICK COUPLING : SQC * FLEXIBLE JOINT(STEEL) : FLXB * FLEXIBLE JOINT(RUBBER) : FLXR * FLEXIBLE JOINT(STEEL_PTFE LINED) : FLXL * FLEXIBLE HOSE : FLXH * STEAM TRAP : ST * SPRAY NOZZLE : SPN * EMERGENCY SHOWER : SSH
* STRAINER(Y-TYPE) : YSTR * STRAINER(T-TYPE) : TSTR * STRAINER(BUCKET-TYPE) : BSTR * ANCHOR PLATE : STOP * BIRD SCREEN : BS * ISOLATION KIT : IK * UNLOADING BOX : UB * AIR TRAP : AT * LOTO : LOTO * SIGHT GLASS : SG * PRESSURE GAUGE : PG * SHILED : SH * SPECIAL BOLT & NUT : BL/BL1

CLIENT SK hynix 23

INSULATION	CODE	E	CONDITION	PRESS. (kg/cm2g)	TEMP. (°C)
	THICK.	25	DESIGN	6.3	60
			OPERATING	4.7	AMB

AREA W14
UNIT RFA
REF. PLAN DWG. CJ-M15W14-PI-A30-R10007-A
REF. P & ID CJ-M15W14-PR-A20-000103

REV. NO.	DATE	DESCRIPTION	BY	CHK	APP'D
1	25.03.31	REVISED AS MARKED	황래종	안남후	박동영
0	25.01.24	APPROVED FOR CONSTRUCTION	황래종	안남후	박동영

CONTRACTOR SK ecoplant
PROJECT NAME M15X Ph4 Project
COMMODITY PAC
JOB NO. 22330D
LINE NO. OD32-PAC-HP2-E-6554
SH'T NO. 01 / 01
REV. 1

경고 : 본 도면은 SK HYNIX의 기업비밀 자료로서, 어떠한 경우에도 목적 외 사용, 복제, 제3자에게 공개, 누설 및 유출할 수 없으며, 회사는 유포자의 불법 사용으로 피해가 발생할 경우 유포자에게 민/형사상 책임을 요구할 수 있음.

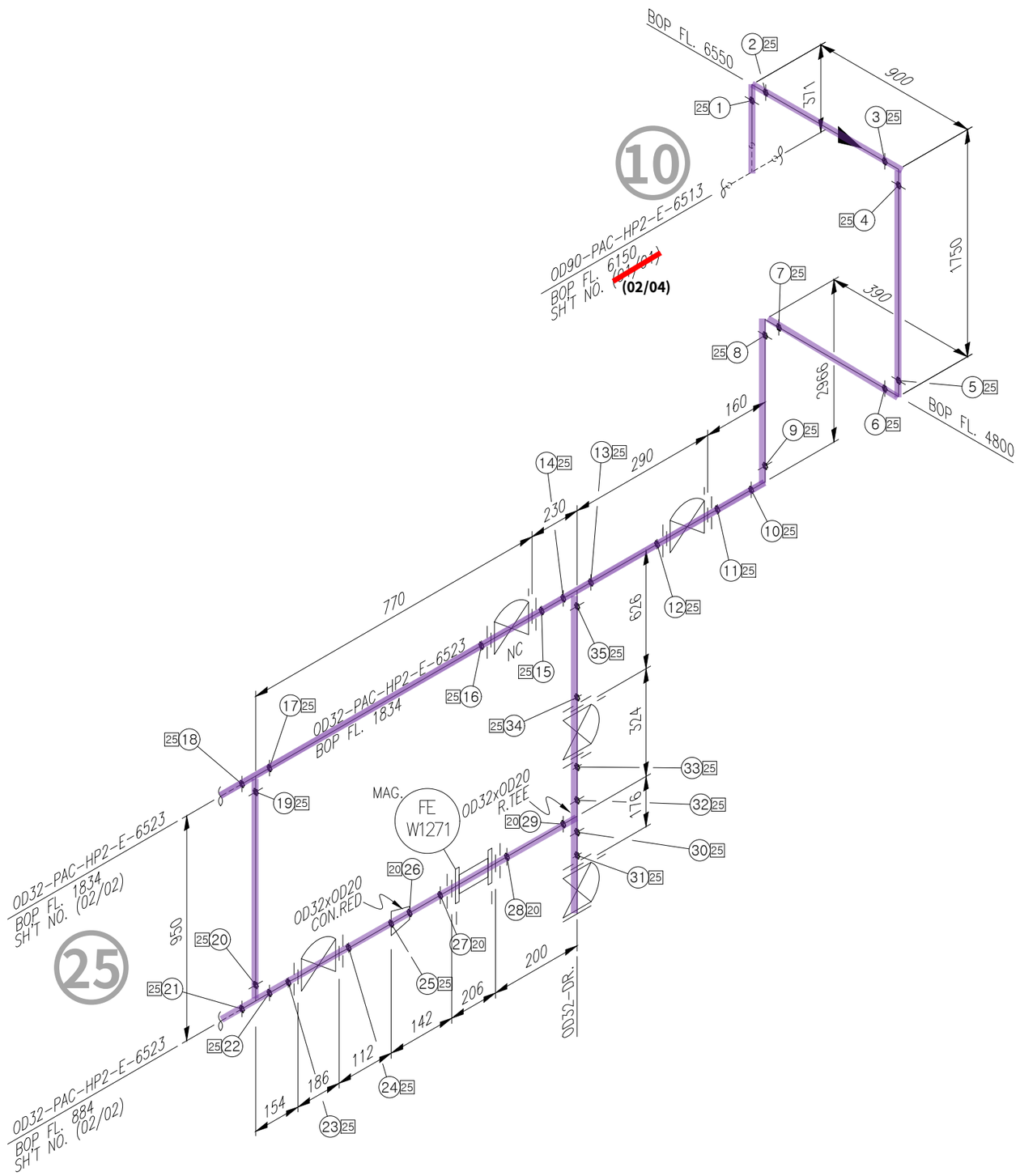

ITEM	SIZE	Q'TY	DESCRIPTION
		HP2	
P	OD32	10.5M	PIPE, HDPE PE100, PE, SOCKET FUSION, PN16/SDR11
P	OD20	0.6M	PIPE, HDPE PE100, PE, SOCKET FUSION, PN16/SDR11
E90	OD32	5EA	ELBOW 90 DEG, HDPE PE100, PE, SOCKET FUSION,
			PN16/SDR11
T	OD32	3EA	TEE EQUAL, HDPE PE100, PE, SOCKET FUSION, PN16/SDR11
TR	OD32xOD20	1EA	TEE RED, HDPE PE100, PE, SOCKET FUSION, PN16/SDR11
RC	OD32xOD20	1EA	REDUCER CON, HDPE PE100, PE, SOCKET FUSION,
			PN16/SDR11
VD	OD32	5EA	DIAPHRAGM VALVE, KS 10K, FF FLG'D, BODY-PP /
			TRIM-EPDM+PTFE DIAPHRAGM, BB, HANDWHEEL
F	OD32	9EA	FLG LAP JOINT / STUB END SET, KS 10K, FF,
			LAP JOINT-STS304 / STUB END-HDPE PE100
F	OD20	2EA	FLG LAP JOINT / STUB END SET, KS 10K, FF,
			LAP JOINT-STS304 / STUB END-HDPE PE100
G	OD32	9EA	GASKET, KS 10K, FF, PTFE+EPDM, 3.0MM TH'K
G	OD20	2EA	GASKET, KS 10K, FF, PTFE+EPDM, 3.0MM TH'K
G2	OD32	1EA	GASKET, KS 10K, FF, PTFE+EPDM, BLIND, 3.0MM TH'K
B1	OD32	10SET	MACHINE BOLT & NYLON NUTS :STS 304 / W WASHERS
B1	OD20	2SET	MACHINE BOLT & NYLON NUTS :STS 304 / W WASHERS
LOTO	OD32	1EA	LOTO
INC	25tXOD32	10.5M	관 보온재(고무발포) + 알루미늄 CASING
INC	25tXOD20	0.6M	관 보온재(고무발포) + 알루미늄 CASING
FB	OD32	1EA	FLG BLIND & LINER SET, KS 10K, FF, BLIND-STS304
			/ LINDER-HDPE PE100 (MIN 5.0MM TH'K)

<NOTE>
1. (*) FIELD ADJUST

* PIPE : P/P1 * 90° ELBOW : E90 * 45° ELBOW : E45 * TEE : T * RED.TEE : TR * STUB-IN : STU * REINFORCING PAD : RP * CON.RED : RC * ECC.RED : RE * CON.SWAGE : RCS/RCS1 * ECC.SWAGE : RES/RES1 * NIPPLE : NP/NP1/NP2 * CAP : CAP/CAP1 * PLUG : PLG * FULL COUPLING : FC * HALF COUPLING : HF/HF1
* STUB-IN : STU * SOCKET(HDPE/PVC) : SC * SADDLE(HDPE) : SD * FLANGE : F/F1 * GASKET : G/G1/G2 * BOLT & NUT : B/B1 * BLIND FLANGE : FB/FB1 * GATE VA. : VG/VG1/VG2 * BALL VA. : VB/VBL0/VB1/VB1L0/VB2/VB2L0 * BUTTERFLY VA. : VF/VF4 * CHECK VA. : VC/VC1/VC2/VC3/VC4/VC5/VC6/VC7
* GLOBE VA. : VL/VL1/VL2 * DIAPHRAGM VA. : VD/VDL0 * DAMPER : VP * QUICK COUPLING : SQC * FLEXIBLE JOINT(STEEL) : FLXB * FLEXIBLE JOINT(RUBBER) : FLXR * FLEXIBLE JOINT(STEEL_PTFE LINED) : FLXL * FLEXIBLE HOSE : FLXH * STEAM TRAP : ST * SPRAY NOZZLE : SPN * EMERGENCY SHOWER : SSH
* STRAINER(Y-TYPE) : YSTR * STRAINER(T-TYPE) : TSTR * STRAINER(BUCKET-TYPE) : BSTR * ANCHOR PLATE : STOP * BIRD SCREEN : BS * ISOLATION KIT : IK * UNLOADING BOX : UB * AIR TRAP : AT * LOTO : LOTO * SIGHT GLASS : SG * PRESSURE GAUGE : PG * SHILED : SH * SPECIAL BOLT & NUT : BL/BL1

CLIENT SK hynix

INSULATION	CODE	E	CONDITION	PRESS. (kg/cm2g)	TEMP. (°C)
	THICK.	25	DESIGN	6.3	60
			OPERATING	4.7	AMB

AREA W14
UNIT RFA
REF. PLAN DWG. CJ-M15W14-PI-A30-R10002-B
REF. P & ID CJ-M15W14-PR-A20-000110

REV. NO.	DATE	DESCRIPTION	BY	CHK	APP'D
1	25.03.31	REVISED AS MARKED	황래종	안남후	박동영
0	25.01.24	APPROVED FOR CONSTRUCTION	황래종	안남후	박동영

CONTRACTOR SK ecoplant
COMMODITY PAC
LINE NO. OD32-PAC-HP2-E-6523
PROJECT NAME M15X Ph4 Project
JOB NO. 22330D
SH'T NO. 01 / 02
REV. 1

경고 : 본 도면은 SK HYNIX의 기업비밀 자료로서, 어떠한 경우에도 목적 외 사용, 복제, 제3자에게 공개, 누설 및 유출할 수 없으며, 회사는 유포자의 불법 사용으로 피해가 발생할 경우 유포자에게 민/형사상 책임을 요구할 수 있음.

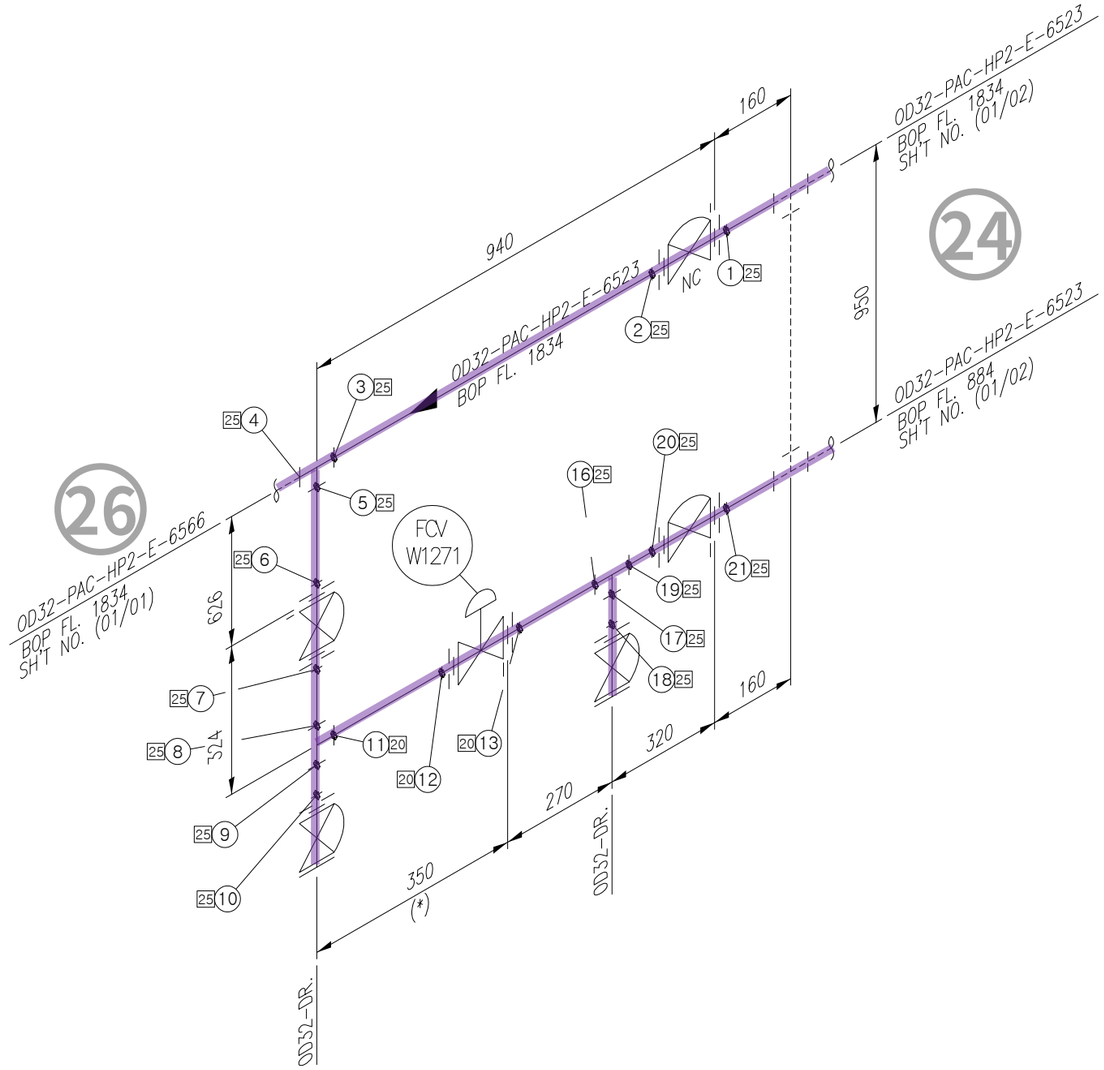

<NOTE>
1. (*) FIELD ADJUST

ITEM	SIZE	Q'TY	DESCRIPTION
		HP2	
P	OD32	3.2M	PIPE, HDPE PE100, PE, SOCKET FUSION, PN16/SDR11
~~P~~	~~OD25~~	~~0.6M~~	~~PIPE, HDPE PE100, PE, SOCKET FUSION, PN16/SDR11~~
T	OD32	2EA	TEE EQUAL, HDPE PE100, PE, SOCKET FUSION, PN16/SDR11
~~TR~~	~~OD32xOD25~~	1EA	TEE RED, ~~HDPE PE100, PE, SOCKET FUSION, PN16/SDR11~~
RC	~~OD32xOD25~~	1EA	REDUCER CON, ~~HDPE PE100, PE, SOCKET~~ FUSION,
			PN16/SDR11
VD	OD32	5EA	DIAPHRAGM VALVE, KS 10K, FF FLG'D, BODY-PP /
			TRIM-EPDM+PTFE DIAPHRAGM, BB, HANDWHEEL
F	OD32	10EA	FLG LAP JOINT / STUB END SET, KS 10K, FF,
			LAP JOINT-STS304 / STUB END-HDPE PE100
~~F~~	~~OD25~~	~~2EA~~	~~FLG LAP JOINT / STUB END SET, KS 10K, FF,~~
			~~LAP JOINT-STS304 / STUB END-HDPE PE100~~
FB	OD32	2EA	FLG BLIND & LINER SET, KS 10K, FF, BLIND-STS304
			/ LINDER-HDPE PE100 (MIN 5.0MM TH'K)
G	OD32	10EA	GASKET, KS 10K, FF, PTFE+EPDM, 3.0MM TH'K
~~G~~	~~OD25~~	~~2EA~~	~~GASKET, KS 10K, FF, PTFE+EPDM, 3.0MM TH'K~~
G2	OD32	2EA	GASKET, KS 10K, FF, PTFE+EPDM, BLIND, 3.0MM TH'K
B1	OD32	12SET	MACHINE BOLT & NYLON NUTS :STS 304 / W WASHERS
~~B1~~	~~OD25~~	~~2SET~~	~~MACHINE BOLT & NYLON NUTS :STS 304 / W WASHERS~~
LOTO	OD32	1EA	LOTO
INC	25tXOD32	3.2M	관 보온재(고무발포) + 알루미늄 CASING
~~INC~~	~~25tXOD25~~	~~0.6M~~	~~관 보온재(고무발포) + 알루미늄 CASING~~

* PIPE : P/P1 * 90° ELBOW : E90 * 45° ELBOW : E45 * TEE : T * RED.TEE : TR * STUB-IN : STU * REINFORCING PAD : RP * CON.RED : RC * ECC.RED : RE * CON.SWAGE : RCS/RCS1 * ECC.SWAGE : RES/RES1 * NIPPLE : NP/NP1/NP2 * CAP : CAP/CAP1 * PLUG : PLG * FULL COUPLING : FC * HALF COUPLING : HF/HF1
* STUB-IN : STU * SOCKET(HDPE/PVC) : SC * SADDLE(HDPE) : SD * FLANGE : F/F1 * GASKET : G/G1/G2 * BOLT & NUT : B/B1 * BLIND FLANGE : FB/FB1 * GATE VA. : VG/VG1/VG2 * BALL VA. : VB/VBLO/VB1/VB1LO/VB2/VB2LO * BUTTERFLY VA. : VF/VF4 * CHECK VA. : VC/VC1/VC2/VC3/VC4/VC5/VC6/VC7
* GLOBE VA. : VL/VL1/VL2 * DIAPHRAGM VA. : VD/VDLO * DAMPER : VP * QUICK COUPLING : SQC * FLEXIBLE JOINT(STEEL) : FLXB * FLEXIBLE JOINT(RUBBER) : FLXR * FLEXIBLE JOINT(STEEL_PTFE LINED) : FLXL * FLEXIBLE HOSE : FLXH * STEAM TRAP : ST * SPRAY NOZZLE : SPN * EMERGENCY SHOWER : SSH
* STRAINER(Y-TYPE) : YSTR * STRAINER(T-TYPE) : TSTR * STRAINER(BUCKET-TYPE) : BSTR * ANCHOR PLATE : STOP * BIRD SCREEN : BS * ISOLATION KIT : IK * UNLOADING BOX : UB * AIR TRAP : AT * LOTO : LOTO * SIGHT GLASS : SG * PRESSURE GAUGE : PG * SHILED : SH * SPECIAL BOLT & NUT : BL/BL1

CLIENT SK hynix

25

INSULATION	CODE	E	CONDITION	PRESS. (kg/cm2g)	TEMP. (°C)
	THICK.	25	DESIGN	6.3	60
			OPERATING	4.7	AMB

AREA W14
UNIT RFA
REF. PLAN DWG. CJ-M15W14-PI-A30-R10002-A
REF. P & ID CJ-M15W14-PR-A20-000110

REV. NO.	DATE	DESCRIPTION	BY	CHK	APP'D
1	25.03.31	REVISED AS MARKED	황래종	안남후	박동영
0	23.02.28	APPROVED FOR CONSTRUCTION	정경만	이광면	박동영

CONTRACTOR SK ecoplant
PROJECT NAME M15X Ph4 Project
COMMODITY PAC
JOB NO. 22330D
LINE NO. OD32-PAC-HP2-E-6523
SH'T NO. 02 / 02
REV. 1

경고 : 본 도면은 SK HYNIX의 기업비밀 자료로서, 어떠한 경우에도 목적 외 사용, 복제, 제3자에게 공개, 누설 및 유출할 수 없으며, 회사는 유포자의 불법 사용으로 피해가 발생할 경우 유포자에게 민/형사상 책임을 요구할 수 있음.

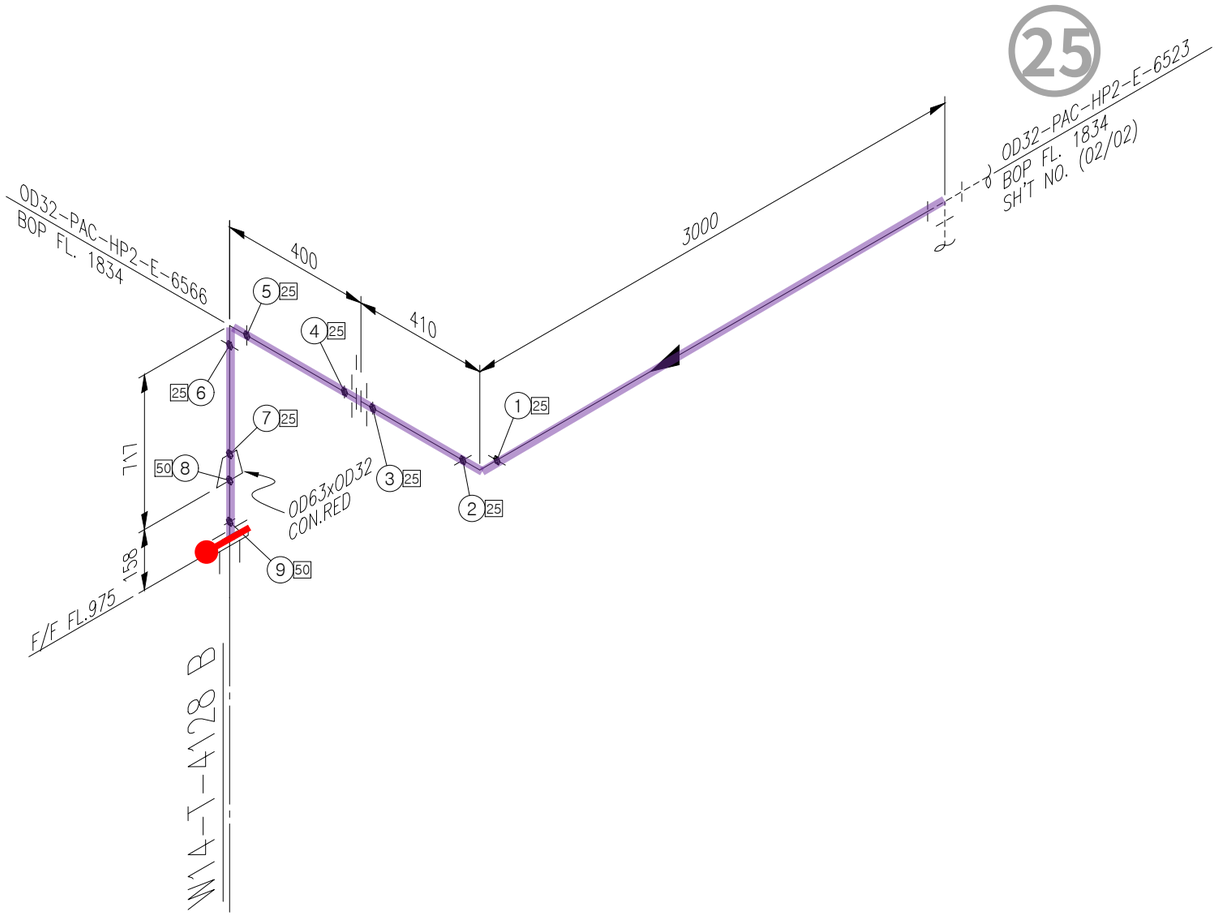

<NOTE>
1. (*) FIELD ADJUST

ITEM	SIZE	Q'TY	DESCRIPTION
		HP2	
P	OD63	0.2M	PIPE, HDPE PE100, PE, SOCKET FUSION, PN16/SDR11
P	OD32	4.6M	PIPE, HDPE PE100, PE, SOCKET FUSION, PN16/SDR11
E90	OD32	2EA	ELBOW 90 DEG, HDPE PE100, PE, SOCKET FUSION,
			PN16/SDR11
RC	OD63xOD32	1EA	REDUCER CON, HDPE PE100, PE, SOCKET FUSION,
			PN16/SDR11
F	OD63	1EA	FLG LAP JOINT / STUB END SET, KS 10K, FF,
			LAP JOINT-STS304 / STUB END-HDPE PE100
F	OD32	2EA	FLG LAP JOINT / STUB END SET, KS 10K, FF,
			LAP JOINT-STS304 / STUB END-HDPE PE100
G	OD63	1EA	GASKET, KS 10K, FF, PTFE+EPDM, 3.0MM TH'K
G	OD32	1EA	GASKET, KS 10K, FF, PTFE+EPDM, 3.0MM TH'K
B	OD63	1SET	MACHINE BOLT & NUTS :STS 304 / W WASHERS
B	OD32	1SET	MACHINE BOLT & NUTS :STS 304 / W WASHERS
INC	25tXOD63	0.2M	관 보온재(고무발포) + 알루미늄 CASING
INC	25tXOD32	4.6M	관 보온재(고무발포) + 알루미늄 CASING

* PIPE : P/P1 * 90° ELBOW : E90 * 45° ELBOW : E45 * TEE : T * RED.TEE : TR * STUB-IN : STU * REINFORCING PAD : RP * CON.RED : RC * ECC.RED : RE * CON.SWAGE : RCS/RCS1 * ECC.SWAGE : RES/RES1 * NIPPLE : NP/NP1/NP2 * CAP : CAP/CAP1 * PLUG : PLG * FULL COUPLING : FC * HALF COUPLING : HF/HF1
* STUB-IN : STU * SOCKET(HDPE/PVC) : SC * SADDLE(HDPE) : SD * FLANGE : F/F1 * GASKET : G/G1/G2 * BOLT & NUT : B/B1 * BLIND FLANGE : FB/FB1 * GATE VA. : VG/VG1/VG2 * BALL VA. : VB/VBLO/VB1/VB1LO/VB2/VB2LO * BUTTERFLY VA. : VF/VF4 * CHECK VA. : VC/VC1/VC2/VC3/VC4/VC5/VC6/VC7
* GLOBE VA. : VL/VL1/VL2 * DIAPHRAGM VA. : VD/VDLO * DAMPER : VP * QUICK COUPLING : SQC * FLEXIBLE JOINT(STEEL) : FLXB * FLEXIBLE JOINT(RUBBER) : FLXR * FLEXIBLE JOINT(STEEL_PTFE LINED) : FLXL * FLEXIBLE HOSE : FLXH * STEAM TRAP : ST * SPRAY NOZZLE : SPN * EMERGENCY SHOWER : SSH
* STRAINER(Y-TYPE) : YSTR * STRAINER(T-TYPE) : TSTR * STRAINER(BUCKET-TYPE) : BSTR * ANCHOR PLATE : STOP * BIRD SCREEN : BS * ISOLATION KIT : IK * UNLOADING BOX : UB * AIR TRAP : AT * LOTO : LOTO * SIGHT GLASS : SG * PRESSURE GAUGE : PG * SHILED : SH * SPECIAL BOLT & NUT : BL/BL1

CLIENT SK hynix

26

INSULATION	CODE	E	CONDITION	PRESS. (kg/cm2g)	TEMP. (°C)
	THICK.	25	DESIGN	6.3	60
			OPERATING	4.7	AMB

AREA W14
UNIT RFA
REF. PLAN DWG. CJ-M15W14-PI-A30-R10002-A
REF. P & ID CJ-M15W14-PR-A20-000110

REV. NO.	DATE	DESCRIPTION	BY	CHK	APP'D
1	25.03.31	REVISED AS MARKED	황래종	안남후	박동영
0	25.01.24	APPROVED FOR CONSTRUCTION	황래종	안남후	박동영

CONTRACTOR SK ecoplant
PROJECT NAME M15X Ph4 Project
COMMODITY PAC
JOB NO. 22330D
LINE NO. OD32-PAC-HP2-E-6566
SH'T NO. 01 / 01
REV. 1

경고 : 본 도면은 SK HYNIX의 기업비밀 자료로서, 어떠한 경우에도 목적 외 사용, 복제, 제3자에게 공개, 누설 및 유출할 수 없으며, 회사는 유포자의 불법 사용으로 피해가 발생할 경우 유포자에게 민/형사상 책임을 요구할 수 있음.

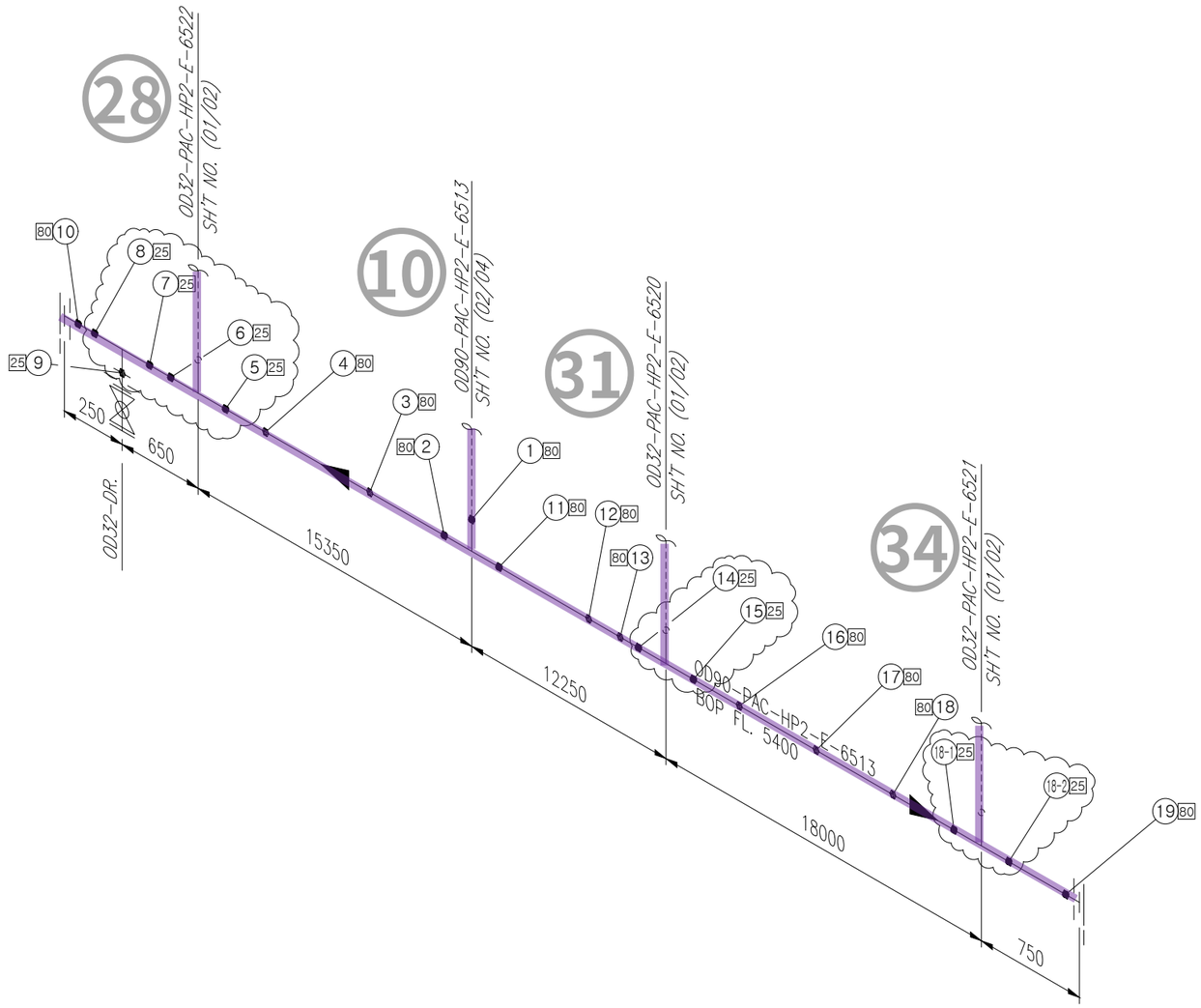

<NOTE>
1. (*) FIELD ADJUST

ITEM	SIZE	Q'TY	DESCRIPTION
		HP2	
P	OD90	47.3M	PIPE, HDPE PE100, PE, BUTT FUSION, PN16/SDR11
P	OD32	0.1M	PIPE, HDPE PE100, PE, SOCKET FUSION, PN16/SDR11
T	OD90	1EA	TEE EQUAL, HDPE PE100, PE, BUTT FUSION, PN16/SDR11
~~SD~~	~~OD90xOD32~~	~~3EA~~	~~SADDLE, HDPE PE100, PE, BRANCH-SOCKET FUSION,~~
			~~PN16/SDR11~~
F	OD90	2EA	FLG LAP JOINT / STUB END SET, KS 10K, FF,
			LAP JOINT-STS304 / STUB END-HDPE PE100
F	OD32	1EA	FLG LAP JOINT / STUB END SET, KS 10K, FF,
			LAP JOINT-STS304 / STUB END-HDPE PE100
FB	OD90	2EA	FLG BLIND & LINER SET, KS 10K, FF, BLIND-STS304
			/ LINDER-HDPE PE100 (MIN 5.0MM TH'K)
FB	OD32	1EA	FLG BLIND & LINER SET, KS 10K, FF, BLIND-STS304
			/ LINDER-HDPE PE100 (MIN 5.0MM TH'K)
G	OD32	1EA	GASKET, KS 10K, FF, PTFE+EPDM, 3.0MM TH'K
G2	OD90	2EA	GASKET, KS 10K, FF, PTFE+EPDM, BLIND, 3.0MM TH'K
G2	OD32	1EA	GASKET, KS 10K, FF, PTFE+EPDM, BLIND, 3.0MM TH'K
B	OD90	2SET	MACHINE BOLT & NUTS :STS 304 / W WASHERS
B	OD32	2SET	MACHINE BOLT & NUTS :STS 304 / W WASHERS
VB	OD32	1EA	BALL VALVE, KS 10K, FF FLG'D, BODY-PP /
			TRIM-PP / SEAT-PTFE, FB, LEVER
INC	25tXOD90	47.3M	관 보온재(고무발포) + 알루미늄 CASING
INC	25tXOD32	0.1M	관 보온재(고무발포) + 알루미늄 CASING
TR	OD90xOD32	4EA	RED. TEE, HDPE PE100, PE, BUTT FUSION, PN16/SDR11

* PIPE : P/P1 * 90° ELBOW : E90 * 45° ELBOW : E45 * TEE : T * RED.TEE : TR * STUB-IN : STU * REINFORCING PAD : RP * CON.RED : RC * ECC.RED : RE * CON.SWAGE : RCS/RCS1 * ECC.SWAGE : RES/RES1 * NIPPLE : NP/NP1/NP2 * CAP : CAP/CAP1 * PLUG : PLG * FULL COUPLING : FC * HALF COUPLING : HF/HF1
* STUB-IN : STU * SOCKET(HDPE/PVC) : SC * SADDLE(HDPE) : SD * FLANGE : F/F1 * GASKET : G/G1/G2 * BOLT & NUT : B/B1 * BLIND FLANGE : FB/FB1 * GATE VA. : VG/VG1/VG2 * BALL VA. : VB/VBLO/VB1/VB1LO/VB2/VB2LO * BUTTERFLY VA. : VF/VF4 * CHECK VA. : VC/VC1/VC2/VC3/VC4/VC5/VC6/VC7
* GLOBE VA. : VL/VL1/VL2 * DIAPHRAGM VA. : VD/VDLO * DAMPER : VP * QUICK COUPLING : SQC * FLEXIBLE JOINT(STEEL) : FLXB * FLEXIBLE JOINT(RUBBER) : FLXR * FLEXIBLE JOINT(STEEL_PTFE LINED) : FLXL * FLEXIBLE HOSE : FLXH * STEAM TRAP : ST * SPRAY NOZZLE : SPN * EMERGENCY SHOWER : SSH
* STRAINER(Y-TYPE) : YSTR * STRAINER(T-TYPE) : TSTR * STRAINER(BUCKET-TYPE) : BSTR * ANCHOR PLATE : STOP * BIRD SCREEN : BS * ISOLATION KIT : IK * UNLOADING BOX : UB * AIR TRAP : AT * LOTO : LOTO * SIGHT GLASS : SG * PRESSURE GAUGE : PG * SHILED : SH * SPECIAL BOLT & NUT : BL/BL1

INSULATION	CODE	E	CONDITION	PRESS. (kg/cm2g)	TEMP. (°C)
	THICK.	25	DESIGN	6.3	60
			OPERATING	4.7	AMB

AREA W14
UNIT RFA
REF. PLAN DWG. CJ-M15W14-PI-A30-R10002-B
REF. P & ID CJ-M15W14-PR-A20-000151

REV. NO.	DATE	DESCRIPTION	BY	CHK	APP'D
1	25.03.31	REVISED AS MARKED	황래종	안남후	박동영
0	25.01.24	APPROVED FOR CONSTRUCTION	황래종	안남후	박동영

CLIENT SK hynix
27
CONTRACTOR SK ecoplant
PROJECT NAME M15X Ph4 Project
COMMODITY PAC
JOB NO. 22330D
LINE NO. OD90-PAC-HP2-E-6513
SH'T NO. 03 / 04
REV. 1

경고 : 본 도면은 SK HYNIX의 기업비밀 자료로서, 어떠한 경우에도 목적 외 사용, 복제, 제3자에게 공개, 누설 및 유출할 수 없으며, 회사는 유포자의 불법 사용으로 피해가 발생할 경우 유포자에게 민/형사상 책임을 요구할 수 있음.

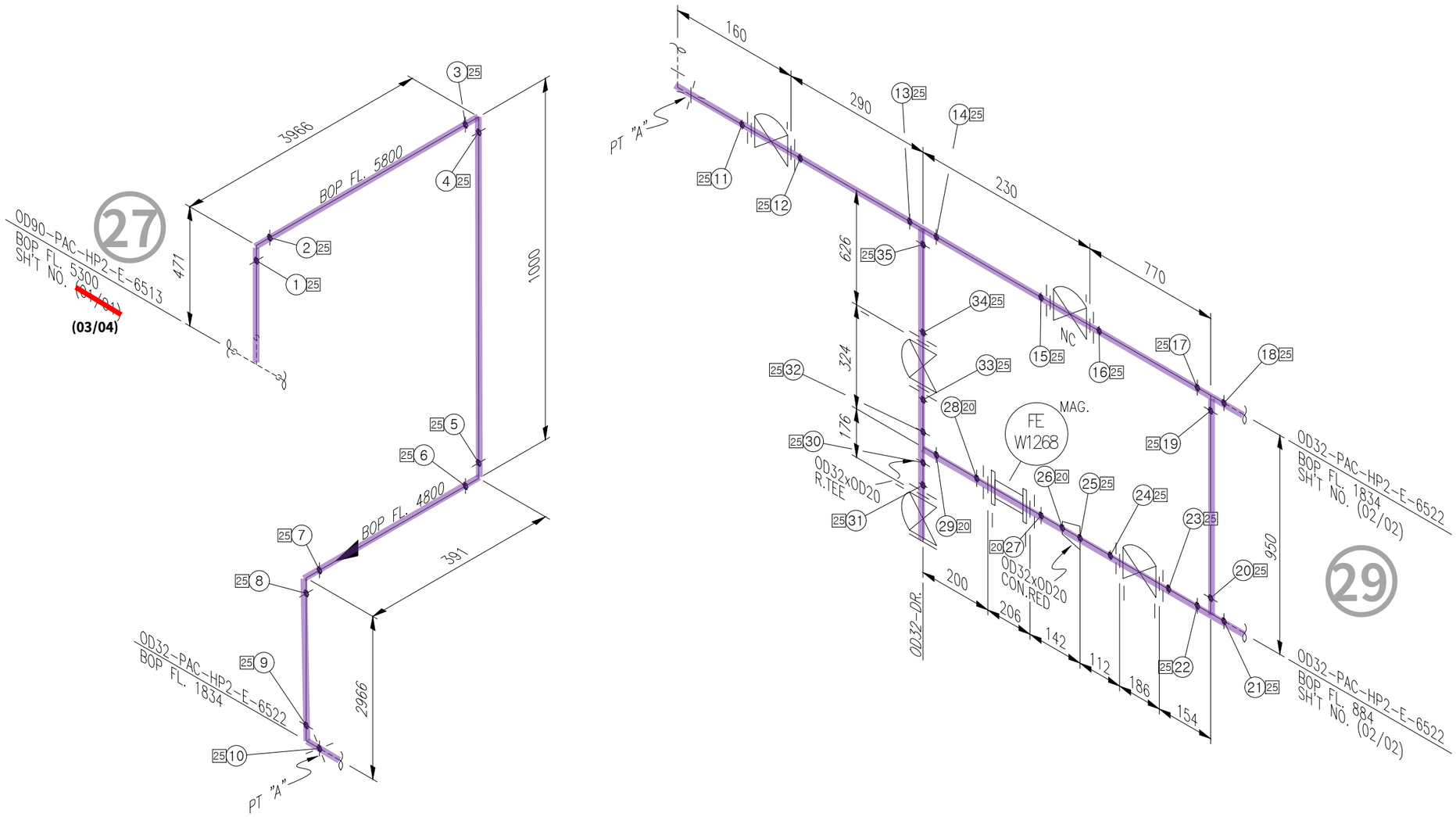

<NOTE>
1. (*) FIELD ADJUST

ITEM	SIZE	Q'TY	DESCRIPTION
		HP2	
P	OD32	12.8M	PIPE, HDPE PE100, PE, SOCKET FUSION, PN16/SDR11
P	OD20	0.6M	PIPE, HDPE PE100, PE, SOCKET FUSION, PN16/SDR11
E90	OD32	5EA	ELBOW 90 DEG, HDPE PE100, PE, SOCKET FUSION,
			PN16/SDR11
T	OD32	3EA	TEE EQUAL, HDPE PE100, PE, SOCKET FUSION, PN16/SDR11
TR	OD32xOD20	1EA	TEE RED, HDPE PE100, PE, SOCKET FUSION, PN16/SDR11
RC	OD32xOD20	1EA	REDUCER CON, HDPE PE100, PE, SOCKET FUSION,
			PN16/SDR11
VD	OD32	5EA	DIAPHRAGM VALVE, KS 10K, FF FLG'D, BODY-PP /
			TRIM-EPDM+PTFE DIAPHRAGM, BB, HANDWHEEL
F	OD32	9EA	FLG LAP JOINT / STUB END SET, KS 10K, FF,
			LAP JOINT-STS304 / STUB END-HDPE PE100
F	OD20	2EA	FLG LAP JOINT / STUB END SET, KS 10K, FF,
			LAP JOINT-STS304 / STUB END-HDPE PE100
G	OD32	9EA	GASKET, KS 10K, FF, PTFE+EPDM, 3.0MM TH'K
G	OD20	2EA	GASKET, KS 10K, FF, PTFE+EPDM, 3.0MM TH'K
G2	OD32	1EA	GASKET, KS 10K, FF, PTFE+EPDM, BLIND, 3.0MM TH'K
B1	OD32	10SET	MACHINE BOLT & NYLON NUTS :STS 304 / W WASHERS
B1	OD20	2SET	MACHINE BOLT & NYLON NUTS :STS 304 / W WASHERS
LOTO	OD32	1EA	LOTO
INC	25tXOD32	12.8M	관 보온재(고무발포) + 알루미늄 CASING
INC	25tXOD20	0.6M	관 보온재(고무발포) + 알루미늄 CASING
FB	OD32	1EA	FLG BLIND & LINER SET, KS 10K, FF, BLIND-STS304
			/ LINDER-HDPE PE100 (MIN 5.0MM TH'K)

* PIPE : P/P1 * 90° ELBOW : E90 * 45° ELBOW : E45 * TEE : T * RED.TEE : TR * STUB-IN : STU * REINFORCING PAD : RP * CON.RED : RC * ECC.RED : RE * CON.SWAGE : RCS/RCS1 * ECC.SWAGE : RES/RES1 * NIPPLE : NP/NP1/NP2 * CAP : CAP/CAP1 * PLUG : PLG * FULL COUPLING : FC * HALF COUPLING : HF/HF1
* STUB-IN : STU * SOCKET(HDPE/PVC) : SC * SADDLE(HDPE) : SD * FLANGE : F/F1 * GASKET : G/G1/G2 * BOLT & NUT : B/B1 * BLIND FLANGE : FB/FB1 * GATE VA. : VG/VG1/VG2 * BALL VA. : VB/VBL0/VB1/VB1L0/VB2/VB2L0 * BUTTERFLY VA. : VF/VF4 * CHECK VA. : VC/VC1/VC2/VC3/VC4/VC5/VC6/VC7
* GLOBE VA. : VL/VL1/VL2 * DIAPHRAGM VA. : VD/VDL0 * DAMPER : VP * QUICK COUPLING : SQC * FLEXIBLE JOINT(STEEL) : FLXB * FLEXIBLE JOINT(RUBBER) : FLXR * FLEXIBLE JOINT(STEEL_PTFE LINED) : FLXL * FLEXIBLE HOSE : FLXH * STEAM TRAP : ST * SPRAY NOZZLE : SPN * EMERGENCY SHOWER : SSH
* STRAINER(Y-TYPE) : YSTR * STRAINER(T-TYPE) : TSTR * STRAINER(BUCKET-TYPE) : BSTR * ANCHOR PLATE : STOP * BIRD SCREEN : BS * ISOLATION KIT : IK * UNLOADING BOX : UB * AIR TRAP : AT * LOTO : LOTO * SIGHT GLASS : SG * PRESSURE GAUGE : PG * SHILED : SH * SPECIAL BOLT & NUT : BL/BL1

CLIENT SK hynix

28

INSULATION	CODE	E
	THICK.	25

CONDITION	PRESS. (kg/cm2g)	TEMP. (°C)
DESIGN	6.3	60
OPERATING	4.7	AMB

AREA W14
UNIT RFA
REF. PLAN DWG. CJ-M15W14-PI-A30-R10003-B
REF. P & ID CJ-M15W14-PR-A20-000109

REV. NO.	DATE	DESCRIPTION	BY	CHK	APP'D
1	25.03.31	REVISED AS MARKED	황래종	안남후	박동영
0	25.01.24	APPROVED FOR CONSTRUCTION	황래종	안남후	박동영

CONTRACTOR SK ecoplant
PROJECT NAME M15X Ph4 Project
COMMODITY PAC
JOB NO. 22330D
LINE NO. 0D32-PAC-HP2-E-6522
SH'T NO. 01 / 02
REV. 1

경고 : 본 도면은 SK HYNIX의 기업비밀 자료로서, 어떠한 경우에도 목적 외 사용, 복제, 제3자에게 공개, 누설 및 유출할 수 없으며, 회사는 유포자의 불법 사용으로 피해가 발생할 경우 유포자에게 민/형사상 책임을 요구할 수 있음.

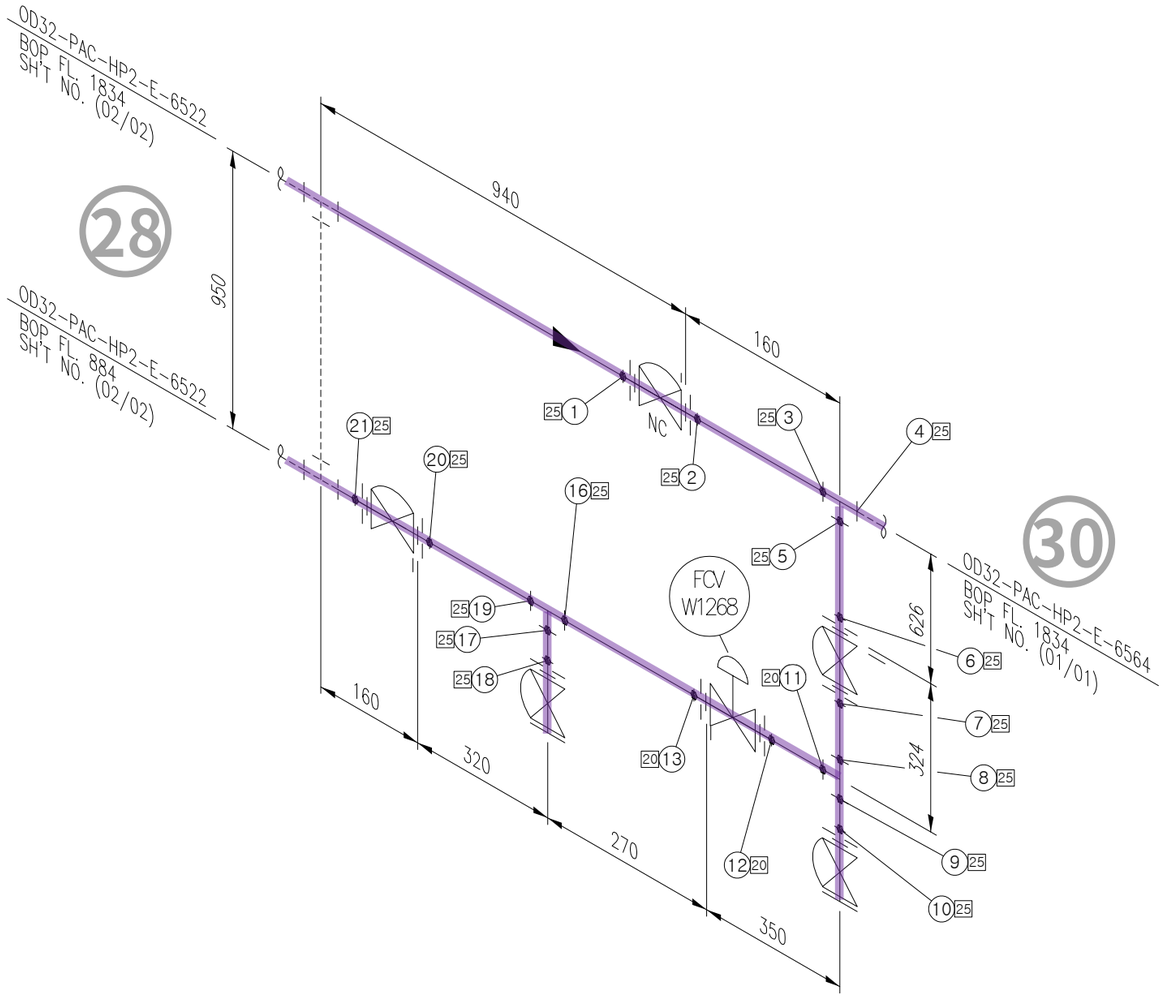

<NOTE>
1. (*) FIELD ADJUST

ITEM	SIZE	Q'TY	DESCRIPTION
		HP2	
P	OD32	3.2M	PIPE, HDPE PE100, PE, SOCKET FUSION, PN16/SDR11
~~P~~	~~OD25~~	~~0.6M~~	~~PIPE, HDPE PE100, PE, SOCKET FUSION, PN16/SDR11~~
T	OD32	2EA	TEE EQUAL, HDPE PE100, PE, SOCKET FUSION, PN16/SDR11
~~TR~~	~~OD32xOD25~~	1EA	TEE RED, ~~HDPE PE100, PE, SOCKET FUSION, PN16/SDR11~~
RC	~~OD32xOD25~~	1EA	REDUCER CON, ~~HDPE PE100, PE, SOCKET~~ FUSION,
			PN16/SDR11
VD	OD32	5EA	DIAPHRAGM VALVE, KS 10K, FF FLG'D, BODY-PP /
			TRIM-EPDM+PTFE DIAPHRAGM, BB, HANDWHEEL
F	OD32	10EA	FLG LAP JOINT / STUB END SET, KS 10K, FF,
			LAP JOINT-STS304 / STUB END-HDPE PE100
~~F~~	~~OD25~~	2EA	FLG LAP ~~JOINT / STUB END SET~~, KS 10K, FF,
			LAP JOINT-STS304 ~~/ STUB END-HDPE~~ PE100
FB	OD32	2EA	FLG BLIND & LINER SET, KS 10K, FF, BLIND-STS304
			/ LINDER-HDPE PE100 (MIN 5.0MM TH'K)
G	OD32	10EA	GASKET, KS 10K, FF, PTFE+EPDM, 3.0MM TH'K
~~G~~	~~OD25~~	~~2EA~~	~~GASKET, KS 10K, FF, PTFE+EPDM, 3.0MM TH'K~~
G2	OD32	2EA	GASKET, KS 10K, FF, PTFE+EPDM, BLIND, 3.0MM TH'K
B1	OD32	12SET	MACHINE BOLT & NYLON NUTS :STS 304 / W WASHERS
~~B1~~	~~OD25~~	~~2SET~~	~~MACHINE BOLT & NYLON NUTS :STS 304 / W WASHERS~~
LOTO	OD32	1EA	LOTO
INC	25tXOD32	3.2M	관 보온재(고무발포) + 알루미늄 CASING
~~INC~~	~~25tXOD25~~	~~0.6M~~	~~관 보온재(고무발포) + 알루미늄 CASING~~

* PIPE : P/P1 * 90° ELBOW : E90 * 45° ELBOW : E45 * TEE : T * RED.TEE : TR * STUB-IN : STU * REINFORCING PAD : RP * CON.RED : RC * ECC.RED : RE * CON.SWAGE : RCS/RCS1 * ECC.SWAGE : RES/RES1 * NIPPLE : NP/NP1/NP2 * CAP : CAP/CAP1 * PLUG : PLG * FULL COUPLING : FC * HALF COUPLING : HF/HF1
* STUB-IN : STU * SOCKET(HDPE/PVC) : SC * SADDLE(HDPE) : SD * FLANGE : F/F1 * GASKET : G/G1/G2 * BOLT & NUT : B/B1 * BLIND FLANGE : FB/FB1 * GATE VA. : VG/VG1/VG2 * BALL VA. : VB/VBLO/VB1/VB1LO/VB2/VB2LO * BUTTERFLY VA. : VF/VF4 * CHECK VA. : VC/VC1/VC2/VC3/VC4/VC5/VC6/VC7
* GLOBE VA. : VL/VL1/VL2 * DIAPHRAGM VA. : VD/VDLO * DAMPER : VP * QUICK COUPLING : SQC * FLEXIBLE JOINT(STEEL) : FLXB * FLEXIBLE JOINT(RUBBER) : FLXR * FLEXIBLE JOINT(STEEL_PTFE LINED) : FLXL * FLEXIBLE HOSE : FLXH * STEAM TRAP : ST * SPRAY NOZZLE : SPN * EMERGENCY SHOWER : SSH
* STRAINER(Y-TYPE) : YSTR * STRAINER(T-TYPE) : TSTR * STRAINER(BUCKET-TYPE) : BSTR * ANCHOR PLATE : STOP * BIRD SCREEN : BS * ISOLATION KIT : IK * UNLOADING BOX : UB * AIR TRAP : AT * LOTO : LOTO * SIGHT GLASS : SG * PRESSURE GAUGE : PG * SHILED : SH * SPECIAL BOLT & NUT : BL/BL1

CLIENT SK hynix

29

INSULATION	CODE	E	CONDITION	PRESS. (kg/cm2g)	TEMP. (°C)
	THICK.	25	DESIGN	6.3	60
			OPERATING	4.7	AMB

AREA W14
UNIT RFA
REF. PLAN DWG. CJ-M15W14-PI-A30-R10003-A
REF. P & ID CJ-M15W14-PR-A20-000109

REV. NO.	DATE	DESCRIPTION	BY	CHK	APP'D
1	25.03.31	REVISED AS MARKED	황래종	안남후	박동영
0	25.01.24	APPROVED FOR CONSTRUCTION	황래종	안남후	박동영

CONTRACTOR SK ecoplant
PROJECT NAME M15X Ph4 Project
COMMODITY PAC
JOB NO. 22330D
LINE NO. OD32-PAC-HP2-E-6522
SH'T NO. 02 / 02
REV. 1

경고 : 본 도면은 SK HYNIX의 기업비밀 자료로서, 어떠한 경우에도 목적 외 사용, 복제, 제3자에게 공개, 누설 및 유출할 수 없으며, 회사는 유포자의 불법 사용으로 피해가 발생할 경우 유포자에게 민/형사상 책임을 요구할 수 있음.

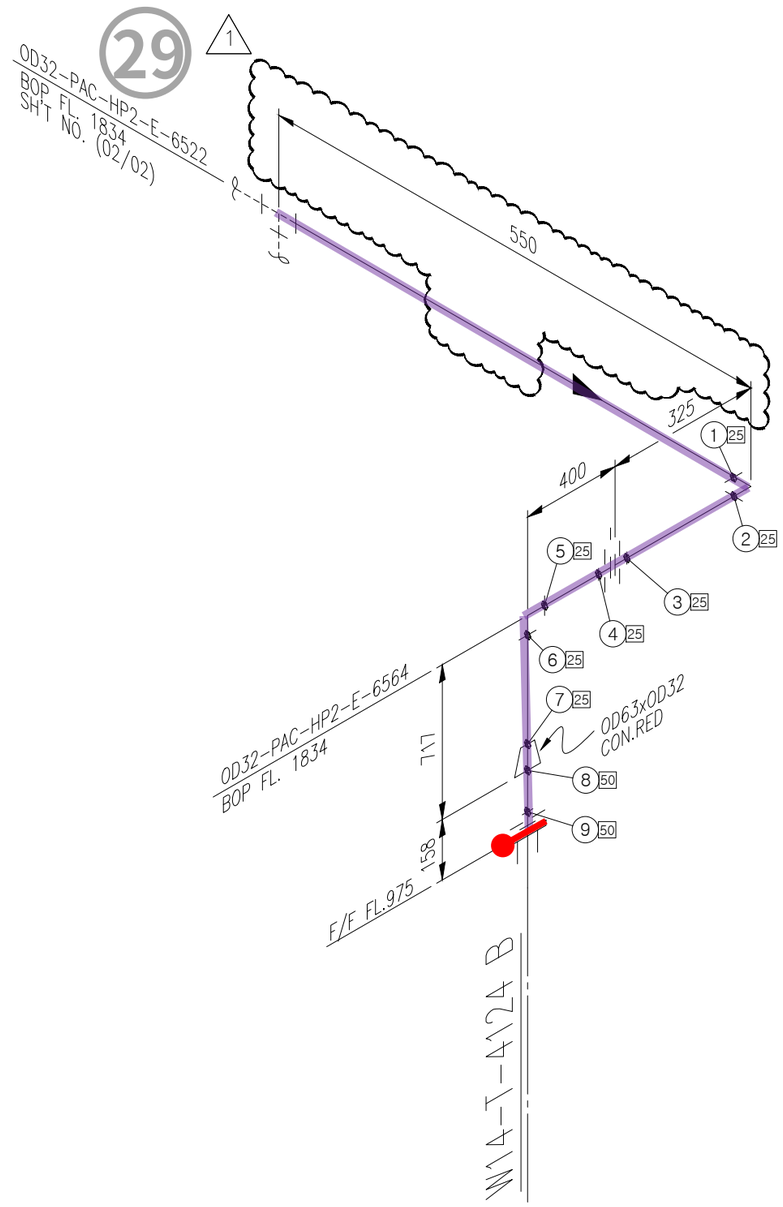

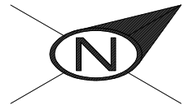

ITEM	SIZE	Q'TY	DESCRIPTION
		HP2	
P	OD63	0.2M	PIPE, HDPE PE100, PE, SOCKET FUSION, PN16/SDR11
P	OD32	2.0M	PIPE, HDPE PE100, PE, SOCKET FUSION, PN16/SDR11
E90	OD32	2EA	ELBOW 90 DEG, HDPE PE100, PE, SOCKET FUSION,
			PN16/SDR11
RC	OD63xOD32	1EA	REDUCER CON, HDPE PE100, PE, SOCKET FUSION,
			PN16/SDR11
1			
			TRIM-EPDM+PTFE DIAPHRAGM, BB, HANDWHEEL
F	OD63	1EA	FLG LAP JOINT / STUB END SET, KS 10K, FF,
			LAP JOINT-STS304 / STUB END-HDPE PE100
F	OD32 1	2EA	FLG LAP JOINT / STUB END SET, KS 10K, FF,
			LAP JOINT-STS304 / STUB END-HDPE PE100
G	OD63	1EA	GASKET, KS 10K, FF, PTFE+EPDM, 3.0MM TH'K
G	OD32 1	1EA	GASKET, KS 10K, FF, PTFE+EPDM, 3.0MM TH'K
B	OD63	1SET	MACHINE BOLT & NUTS :STS 304 / W WASHERS
B	OD32 1	1SET	MACHINE BOLT & NUTS :STS 304 / W WASHERS
1 INC	25tXOD63	0.2M	관 보온재(고무발포) + 알루미늄 CASING
INC	25tXOD32	2.0M	관 보온재(고무발포) + 알루미늄 CASING

<NOTE>
1. (*) FIELD ADJUST

* PIPE : P/P1 * 90° ELBOW : E90 * 45° ELBOW : E45 * TEE : T * RED.TEE : TR * STUB-IN : STU * REINFORCING PAD : RP * CON.RED : RC * ECC.RED : RE * CON.SWAGE : RCS/RCS1 * ECC.SWAGE : RES/RES1 * NIPPLE : NP/NP1/NP2 * CAP : CAP/CAP1 * PLUG : PLG * FULL COUPLING : FC * HALF COUPLING : HF/HF1
* STUB-IN : STU * SOCKET(HDPE/PVC) : SC * SADDLE(HDPE) : SD * FLANGE : F/F1 * GASKET : G/G1/G2 * BOLT & NUT : B/B1 * BLIND FLANGE : FB/FB1 * GATE VA. : VG/VG1/VG2 * BALL VA. : VB/VBL0/VB1/VB1L0/VB2/VB2L0 * BUTTERFLY VA. : VF/VF4 * CHECK VA. : VC/VC1/VC2/VC3/VC4/VC5/VC6/VC7
* GLOBE VA. : VL/VL1/VL2 * DIAPHRAGM VA. : VD/VDL0 * DAMPER : VP * QUICK COUPLING : SQC * FLEXIBLE JOINT(STEEL) : FLXB * FLEXIBLE JOINT(RUBBER) : FLXR * FLEXIBLE JOINT(STEEL_PTFE LINED) : FLXL * FLEXIBLE HOSE : FLXH * STEAM TRAP : ST * SPRAY NOZZLE : SPN * EMERGENCY SHOWER : SSH
* STRAINER(Y-TYPE) : YSTR * STRAINER(T-TYPE) : TSTR * STRAINER(BUCKET-TYPE) : BSTR * ANCHOR PLATE : STOP * BIRD SCREEN : BS * ISOLATION KIT : IK * UNLOADING BOX : UB * AIR TRAP : AT * LOTO : LOTO * SIGHT GLASS : SG * PRESSURE GAUGE : PG * SHILED : SH * SPECIAL BOLT & NUT : BL/BL1

CLIENT SK hynix

30

INSULATION	CODE	E	CONDITION	PRESS. (kg/cm2g)	TEMP. (°C)
	THICK.	25	DESIGN	6.3	60
			OPERATING	4.7	AMB

AREA W14
UNIT RFA
REF. PLAN DWG. CJ-M15W14-PI-A30-R10003-A
REF. P & ID CJ-M15W14-PR-A20-000109

REV. NO.	DATE	DESCRIPTION	BY	CHK	APP'D
1	25.03.31	REVISED AS MARKED	황래종	안남후	박동영
0	25.01.24	APPROVED FOR CONSTRUCTION	황래종	안남후	박동영

CONTRACTOR SK ecoplant
PROJECT NAME M15X Ph4 Project
COMMODITY PAC
JOB NO. 22330D
LINE NO. 0D32-PAC-HP2-E-6564
SH'T NO. 01 / 01
REV. 1

경고 : 본 도면은 SK HYNIX의 기업비밀 자료로서, 어떠한 경우에도 목적 외 사용, 복제, 제3자에게 공개, 누설 및 유출할 수 없으며, 회사는 유포자의 불법 사용으로 피해가 발생할 경우 유포자에게 민/형사상 책임을 요구할 수 있음.

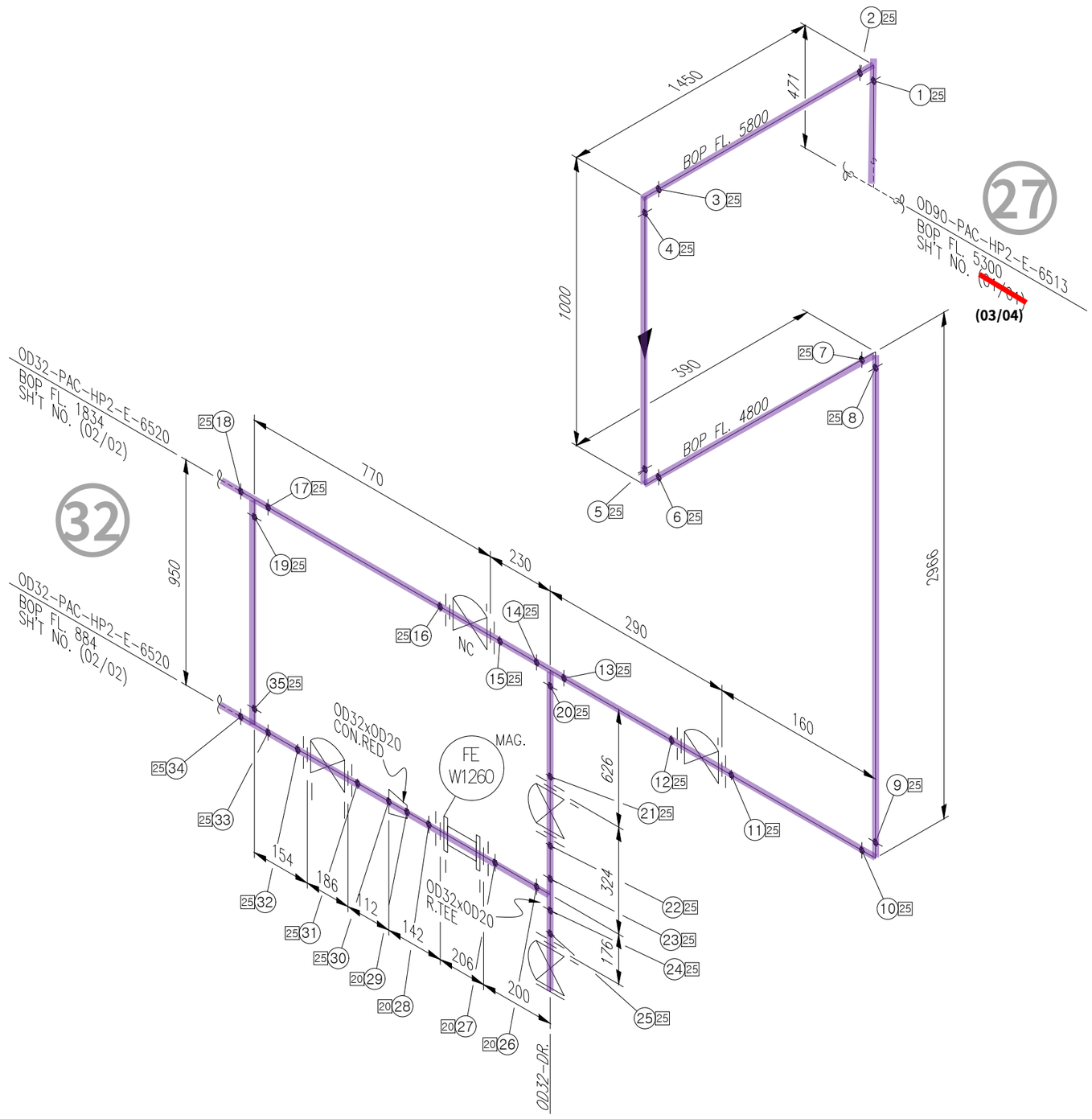

<NOTE>
1. (*) FIELD ADJUST

ITEM	SIZE	Q'TY	DESCRIPTION
		HP2	
P	OD32	10.3M	PIPE, HDPE PE100, PE, SOCKET FUSION, PN16/SDR11
P	OD20	0.6M	PIPE, HDPE PE100, PE, SOCKET FUSION, PN16/SDR11
E90	OD32	5EA	ELBOW 90 DEG, HDPE PE100, PE, SOCKET FUSION,
			PN16/SDR11
T	OD32	3EA	TEE EQUAL, HDPE PE100, PE, SOCKET FUSION, PN16/SDR11
TR	OD32xOD20	1EA	TEE RED, HDPE PE100, PE, SOCKET FUSION, PN16/SDR11
RC	OD32xOD20	1EA	REDUCER CON, HDPE PE100, PE, SOCKET FUSION,
			PN16/SDR11
VD	OD32	5EA	DIAPHRAGM VALVE, KS 10K, FF FLG'D, BODY-PP /
			TRIM-EPDM+PTFE DIAPHRAGM, BB, HANDWHEEL
F	OD32	9EA	FLG LAP JOINT / STUB END SET, KS 10K, FF,
			LAP JOINT-STS304 / STUB END-HDPE PE100
F	OD20	2EA	FLG LAP JOINT / STUB END SET, KS 10K, FF,
			LAP JOINT-STS304 / STUB END-HDPE PE100
G	OD32	9EA	GASKET, KS 10K, FF, PTFE+EPDM, 3.0MM TH'K
G	OD20	2EA	GASKET, KS 10K, FF, PTFE+EPDM, 3.0MM TH'K
G2	OD32	1EA	GASKET, KS 10K, FF, PTFE+EPDM, BLIND, 3.0MM TH'K
B1	OD32	10SET	MACHINE BOLT & NYLON NUTS :STS 304 / W WASHERS
B1	OD20	2SET	MACHINE BOLT & NYLON NUTS :STS 304 / W WASHERS
LOTO	OD32	1EA	LOTO
INC	25tXOD32	10.3M	관 보온재(고무발포) + 알루미늄 CASING
INC	25tXOD20	0.6M	관 보온재(고무발포) + 알루미늄 CASING
FB	OD32	1EA	FLG BLIND & LINER SET, KS 10K, FF, BLIND-STS304
			/ LINDER-HDPE PE100 (MIN 5.0MM TH'K)

* PIPE : P/P1 * 90° ELBOW : E90 * 45° ELBOW : E45 * TEE : T * RED.TEE : TR * STUB-IN : STU * REINFORCING PAD : RP * CON.RED : RC * ECC.RED : RE * CON.SWAGE : RCS/RCS1 * ECC.SWAGE : RES/RES1 * NIPPLE : NP/NP1/NP2 * CAP : CAP/CAP1 * PLUG : PLG * FULL COUPLING : FC * HALF COUPLING : HF/HF1
* STUB-IN : STU * SOCKET(HDPE/PVC) : SC * SADDLE(HDPE) : SD * FLANGE : F/F1 * GASKET : G/G1/G2 * BOLT & NUT : B/B1 * BLIND FLANGE : FB/FB1 * GATE VA. : VG/VG1/VG2 * BALL VA. : VB/VBL0/VB1/VB1L0/VB2/VB2L0 * BUTTERFLY VA. : VF/VF4 * CHECK VA. : VC/VC1/VC2/VC3/VC4/VC5/VC6/VC7
* GLOBE VA. : VL/VL1/VL2 * DIAPHRAGM VA. : VD/VDL0 * DAMPER : VP * QUICK COUPLING : SQC * FLEXIBLE JOINT(STEEL) : FLXB * FLEXIBLE JOINT(RUBBER) : FLXR * FLEXIBLE JOINT(STEEL_PTFE LINED) : FLXL * FLEXIBLE HOSE : FLXH * STEAM TRAP : ST * SPRAY NOZZLE : SPN * EMERGENCY SHOWER : SSH
* STRAINER(Y-TYPE) : YSTR * STRAINER(T-TYPE) : TSTR * STRAINER(BUCKET-TYPE) : BSTR * ANCHOR PLATE : STOP * BIRD SCREEN : BS * ISOLATION KIT : IK * UNLOADING BOX : UB * AIR TRAP : AT * LOTO : LOTO * SIGHT GLASS : SG * PRESSURE GAUGE : PG * SHILED : SH * SPECIAL BOLT & NUT : BL/BL1

CLIENT SK hynix

31

INSULATION	CODE	E	CONDITION	PRESS. (kg/cm2g)	TEMP. (°C)
	THICK.	25	DESIGN	6.3	60
			OPERATING	4.7	AMB

AREA W14
UNIT RFA
REF. PLAN DWG. CJ-M15W14-PI-A30-R10002-B
REF. P & ID CJ-M15W14-PR-A20-000107

REV. NO.	DATE	DESCRIPTION	BY	CHK	APP'D
1	25.03.31	REVISED AS MARKED	황래종	안남후	박동영
0	25.01.24	APPROVED FOR CONSTRUCTION	황래종	안남후	박동영

CONTRACTOR SK ecoplant
PROJECT NAME M15X Ph4 Project
COMMODITY PAC
JOB NO. 22330D
LINE NO. OD32-PAC-HP2-E-6520
SH'T NO. 01 / 02
REV. 0

경고 : 본 도면은 SK HYNIX의 기업비밀 자료로서, 어떠한 경우에도 목적 외 사용, 복제, 제3자에게 공개, 누설 및 유출할 수 없으며, 회사는 유포자의 불법 사용으로 피해가 발생할 경우 유포자에게 민/형사상 책임을 요구할 수 있음.

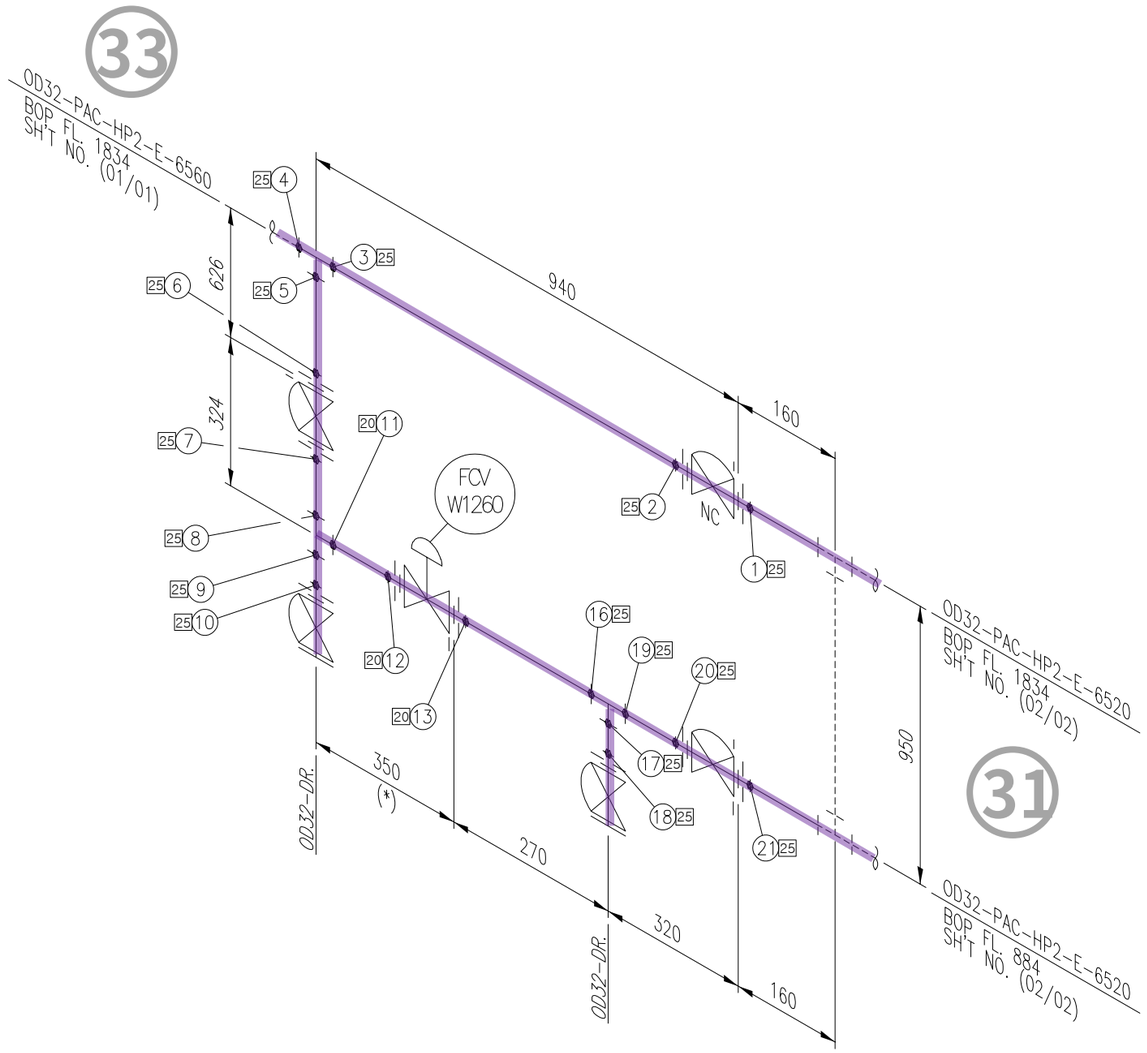

<NOTE>
1. (*) FIELD ADJUST

SK ecoplant

ITEM	SIZE	Q'TY	DESCRIPTION
		HP2	
P	OD32	3.2M	PIPE, HDPE PE100, PE, SOCKET FUSION, PN16/SDR11
~~P~~	~~OD25~~	~~0.6M~~	~~PIPE, HDPE PE100, PE, SOCKET FUSION, PN16/SDR11~~
T	OD32	2EA	TEE EQUAL, HDPE PE100, PE, SOCKET FUSION, PN16/SDR11
~~TR~~	~~OD32xOD25~~	1EA	TEE RED, ~~HDPE PE100, PE, SOCKET FUSION,~~ PN16/SDR11
RC	~~OD32xOD25~~	1EA	REDUCER CON, ~~HDPE PE100, PE, SOCKET~~ FUSION,
			PN16/SDR11
VD	OD32	5EA	DIAPHRAGM VALVE, KS 10K, FF FLG'D, BODY-PP /
			TRIM-EPDM+PTFE DIAPHRAGM, BB, HANDWHEEL
F	OD32	10EA	FLG LAP JOINT / STUB END SET, KS 10K, FF,
			LAP JOINT-STS304 / STUB END-HDPE PE100
~~F~~	~~OD25~~	2EA	FLG LAP ~~JOINT / STUB END SET,~~ KS 10K, FF,
			LAP JOINT-STS304 ~~/ STUB END-HDPE~~ PE100
FB	OD32	2EA	FLG BLIND & LINER SET, KS 10K, FF, BLIND-STS304
			/ LINDER-HDPE PE100 (MIN 5.0MM TH'K)
G	OD32	10EA	GASKET, KS 10K, FF, PTFE+EPDM, 3.0MM TH'K
~~G~~	~~OD25~~	~~2EA~~	~~GASKET, KS 10K, FF,~~ PTFE+EPDM, 3.0MM TH'K
G2	OD32	2EA	GASKET, KS 10K, FF, PTFE+EPDM, BLIND, 3.0MM TH'K
B1	OD32	12SET	MACHINE BOLT & NYLON NUTS :STS 304 / W WASHERS
~~B1~~	~~OD25~~	~~2SET~~	~~MACHINE BOLT & NYLON NUTS~~ :STS 304 / W WASHERS
LOTO	OD32	1EA	LOTO
INC	25tXOD32	3.2M	관 보온재(고무발포) + 알루미늄 CASING
~~INC~~	~~25tXOD25~~	~~0.6M~~	~~관 보온재(고무발포) + 알루미늄 CASING~~

* PIPE : P/P1 * 90° ELBOW : E90 * 45° ELBOW : E45 * TEE : T * RED.TEE : TR * STUB-IN : STU * REINFORCING PAD : RP * CON.RED : RC * ECC.RED : RE * CON.SWAGE : RCS/RCS1 * ECC.SWAGE : RES/RES1 * NIPPLE : NP/NP1/NP2 * CAP : CAP/CAP1 * PLUG : PLG * FULL COUPLING : FC * HALF COUPLING : HF/HF1
* STUB-IN : STU * SOCKET(HDPE/PVC) : SC * SADDLE(HDPE) : SD * FLANGE : F/F1 * GASKET : G/G1/G2 * BOLT & NUT : B/B1 * BLIND FLANGE : FB/FB1 * GATE VA. : VG/VG1/VG2 * BALL VA. : VB/VBLO/VB1/VB1LO/VB2/VB2LO * BUTTERFLY VA. : VF/VF4 * CHECK VA. : VC/VC1/VC2/VC3/VC4/VC5/VC6/VC7
* GLOBE VA. : VL/VL1/VL2 * DIAPHRAGM VA. : VD/VDLO * DAMPER : VP * QUICK COUPLING : SQC * FLEXIBLE JOINT(STEEL) : FLXB * FLEXIBLE JOINT(RUBBER) : FLXR * FLEXIBLE JOINT(STEEL_PTFE LINED) : FLXL * FLEXIBLE HOSE : FLXH * STEAM TRAP : ST * SPRAY NOZZLE : SPN * EMERGENCY SHOWER : SSH
* STRAINER(Y-TYPE) : YSTR * STRAINER(T-TYPE) : TSTR * STRAINER(BUCKET-TYPE) : BSTR * ANCHOR PLATE : STOP * BIRD SCREEN : BS * ISOLATION KIT : IK * UNLOADING BOX : UB * AIR TRAP : AT * LOTO : LOTO * SIGHT GLASS : SG * PRESSURE GAUGE : PG * SHILED : SH * SPECIAL BOLT & NUT : BL/BL1

CLIENT SK hynix 32

INSULATION	CODE	E	CONDITION	PRESS. (kg/cm2g)	TEMP. (°C)
	THICK.	25	DESIGN	6.3	60
			OPERATING	4.7	AMB

AREA W14
UNIT RFA
REF. PLAN DWG. CJ-M15W14-PI-A30-R10002-A
REF. P & ID CJ-M15W14-PR-A20-000107

REV. NO.	DATE	DESCRIPTION	BY	CHK	APP'D
1	25.03.31	REVISED AS MARKED	황래종	안남후	박동영
0	25.01.24	APPROVED FOR CONSTRUCTION	황래종	안남후	박동영

CONTRACTOR SK ecoplant
PROJECT NAME M15X Ph4 Project
COMMODITY PAC
JOB NO. 22330D
LINE NO. OD32-PAC-HP2-E-6520
SH'T NO. 02 / 02
REV. 1

경고 : 본 도면은 SK HYNIX의 기업비밀 자료로서, 어떠한 경우에도 목적 외 사용, 복제, 제3자에게 공개, 누설 및 유출할 수 없으며, 회사는 유포자의 불법 사용으로 피해가 발생할 경우 유포자에게 민/형사상 책임을 요구할 수 있음.

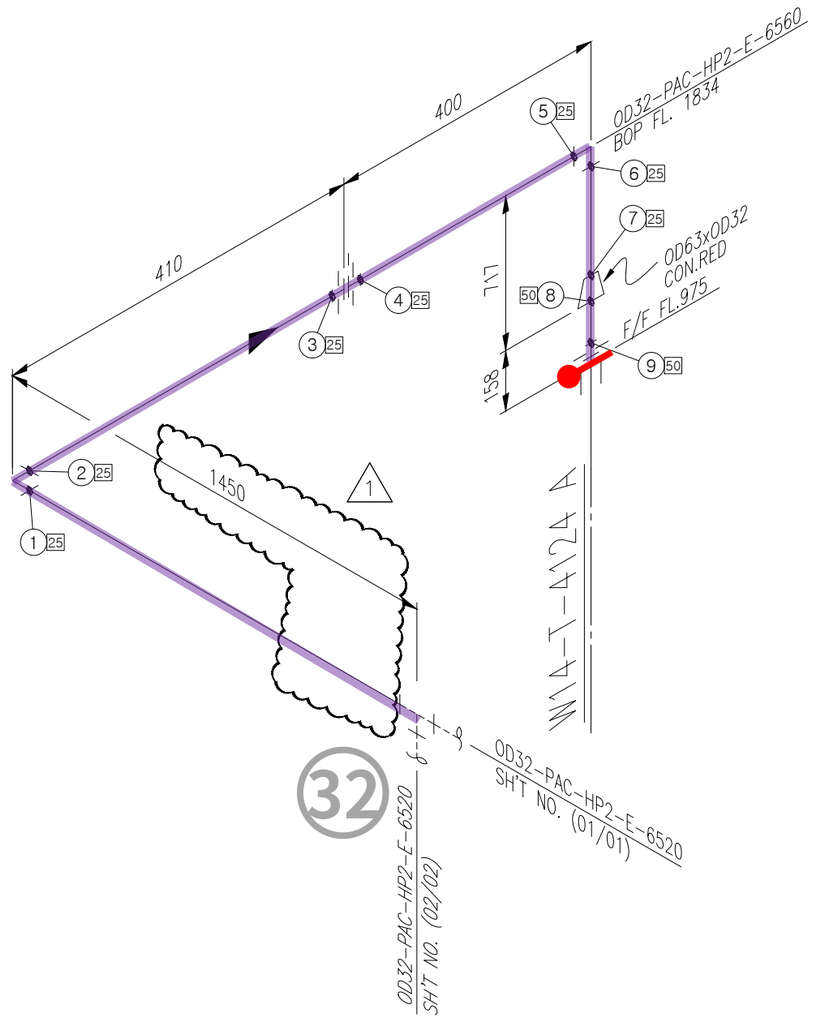

SK ecoplant

ITEM	SIZE	Q'TY	DESCRIPTION
		HP2	
P	OD63	0.2M	PIPE, HDPE PE100, PE, SOCKET FUSION, PN16/SDR11
P	OD32	3.0M	PIPE, HDPE PE100, PE, SOCKET FUSION, PN16/SDR11
E90	OD32	2EA	ELBOW 90 DEG, HDPE PE100, PE, SOCKET FUSION,
			PN16/SDR11
RC	OD63xOD32	1EA	REDUCER CON, HDPE PE100, PE, SOCKET FUSION,
			PN16/SDR11
			TRIM-EPDM+PTFE DIAPHRAGM, BB, HANDWHEEL
F	OD63	1EA	FLG LAP JOINT / STUB END SET, KS 10K, FF,
			LAP JOINT-STS304 / STUB END-HDPE PE100
F	OD32	2EA	FLG LAP JOINT / STUB END SET, KS 10K, FF,
			LAP JOINT-STS304 / STUB END-HDPE PE100
G	OD63	1EA	GASKET, KS 10K, FF, PTFE+EPDM, 3.0MM TH'K
G	OD32	1EA	GASKET, KS 10K, FF, PTFE+EPDM, 3.0MM TH'K
B	OD63	1SET	MACHINE BOLT & NUTS :STS 304 / W WASHERS
B	OD32	1SET	MACHINE BOLT & NUTS :STS 304 / W WASHERS
INC	25tX50A	0.2M	관 보온재(고무발포) + 알루미늄 CASING
INC	25tX25A	2.9M	관 보온재(고무발포) + 알루미늄 CASING

<NOTE>
1. (*) FIELD ADJUST

* PIPE : P/P1 * 90° ELBOW : E90 * 45° ELBOW : E45 * TEE : T * RED.TEE : TR * STUB-IN : STU * REINFORCING PAD : RP * CON.RED : RC * ECC.RED : RE * CON.SWAGE : RCS/RCS1 * ECC.SWAGE : RES/RES1 * NIPPLE : NP/NP1/NP2 * CAP : CAP/CAP1 * PLUG : PLG * FULL COUPLING : FC * HALF COUPLING : HF/HF1
* STUB-IN : STU * SOCKET(HDPE/PVC) : SC * SADDLE(HDPE) : SD * FLANGE : F/F1 * GASKET : G/G1/G2 * BOLT & NUT : B/B1 * BLIND FLANGE : FB/FB1 * GATE VA. : VG/VG1/VG2 * BALL VA. : VB/VBL0/VB1/VB1L0/VB2/VB2L0 * BUTTERFLY VA. : VF/VF4 * CHECK VA. : VC/VC1/VC2/VC3/VC4/VC5/VC6/VC7
* GLOBE VA. : VL/VL1/VL2 * DIAPHRAGM VA. : VD/VDL0 * DAMPER : VP * QUICK COUPLING : SQC * FLEXIBLE JOINT(STEEL) : FLXB * FLEXIBLE JOINT(RUBBER) : FLXR * FLEXIBLE JOINT(STEEL_PTFE LINED) : FLXL * FLEXIBLE HOSE : FLXH * STEAM TRAP : ST * SPRAY NOZZLE : SPN * EMERGENCY SHOWER : SSH
* STRAINER(Y-TYPE) : YSTR * STRAINER(T-TYPE) : TSTR * STRAINER(BUCKET-TYPE) : BSTR * ANCHOR PLATE : STOP * BIRD SCREEN : BS * ISOLATION KIT : IK * UNLOADING BOX : UB * AIR TRAP : AT * LOTO : LOTO * SIGHT GLASS : SG * PRESSURE GAUGE : PG * SHILED : SH * SPECIAL BOLT & NUT : BL/BL1

CLIENT SK hynix

33

INSULATION	CODE	E	CONDITION	PRESS. (kg/cm2g)	TEMP. (°C)
	THICK.	25	DESIGN	6.3	60
			OPERATING	4.7	AMB

AREA W14
UNIT RFA
REF. PLAN DWG. CJ-M15W14-PI-A30-R10002-A
REF. P & ID CJ-M15W14-PR-A20-000107

REV. NO.	DATE	DESCRIPTION	BY	CHK	APP'D
1	25.03.31	REVISED AS MARKED	황래종	안남후	박동영
0	23.02.28	APPROVED FOR CONSTRUCTION	황래종	안남후	박동영

CONTRACTOR SK ecoplant
PROJECT NAME M15X Ph4 Project
COMMODITY PAC
JOB NO. 22330D
LINE NO. OD32-PAC-HP2-E-6560
SH'T NO. 01 / 01
REV. 1

경고 : 본 도면은 SK HYNIX의 기업비밀 자료로서, 어떠한 경우에도 목적 외 사용, 복제, 제3자에게 공개, 누설 및 유출할 수 없으며, 회사는 유포자의 불법 사용으로 피해가 발생할 경우 유포자에게 민/형사상 책임을 요구할 수 있음.

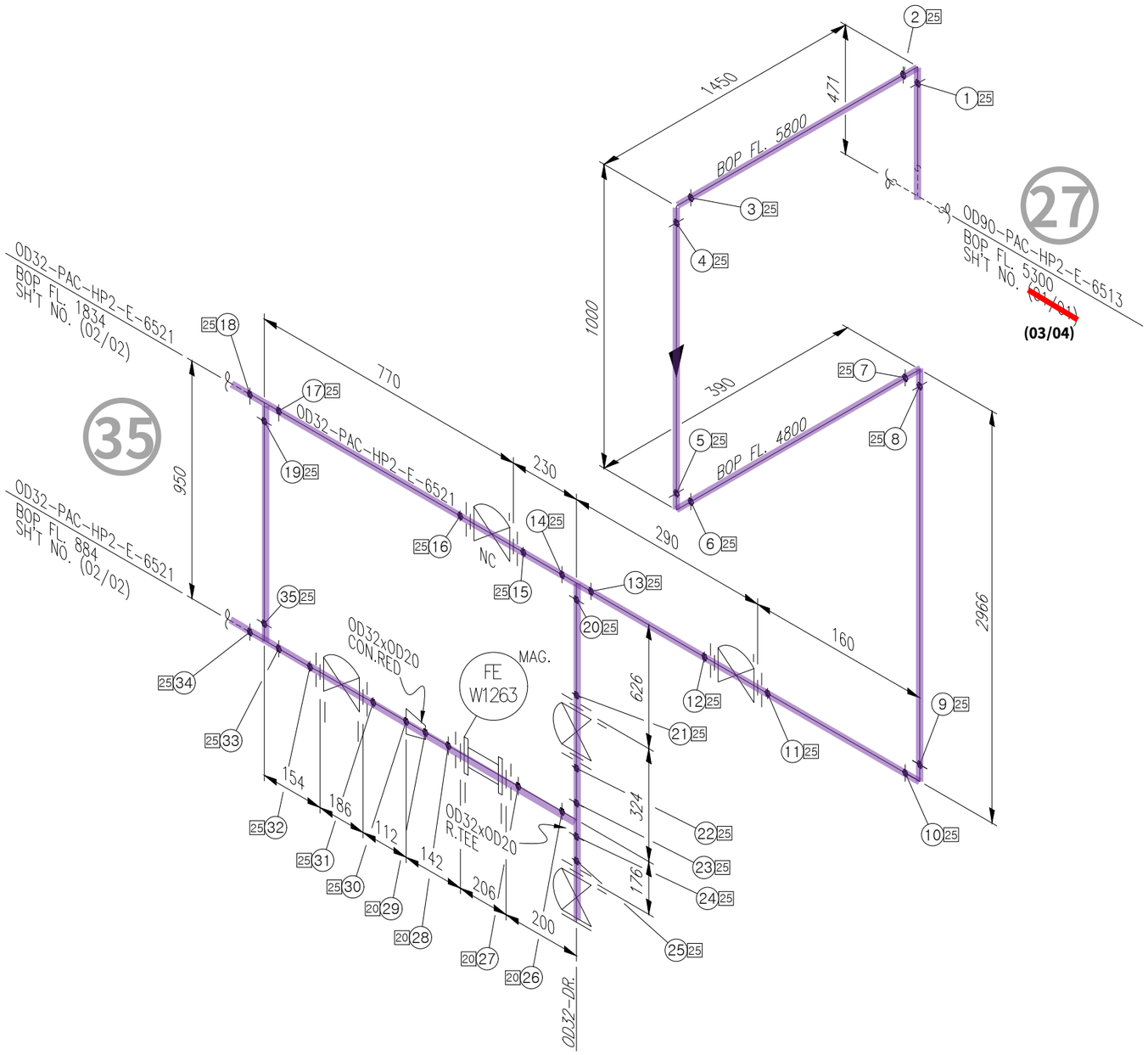

<NOTE>
1. (*) FIELD ADJUST

ITEM	SIZE	Q'TY	DESCRIPTION
		HP2	
P	OD32	10.3M	PIPE, HDPE PE100, PE, SOCKET FUSION, PN16/SDR11
P	OD20	0.6M	PIPE, HDPE PE100, PE, SOCKET FUSION, PN16/SDR11
E90	OD32	5EA	ELBOW 90 DEG, HDPE PE100, PE, SOCKET FUSION,
			PN16/SDR11
T	OD32	3EA	TEE EQUAL, HDPE PE100, PE, SOCKET FUSION, PN16/SDR11
TR	OD32xOD20	1EA	TEE RED, HDPE PE100, PE, SOCKET FUSION, PN16/SDR11
RC	OD32xOD20	1EA	REDUCER CON, HDPE PE100, PE, SOCKET FUSION,
			PN16/SDR11
VD	OD32	5EA	DIAPHRAGM VALVE, KS 10K, FF FLG'D, BODY-PP /
			TRIM-EPDM+PTFE DIAPHRAGM, BB, HANDWHEEL
F	OD32	9EA	FLG LAP JOINT / STUB END SET, KS 10K, FF,
			LAP JOINT-STS304 / STUB END-HDPE PE100
F	OD20	2EA	FLG LAP JOINT / STUB END SET, KS 10K, FF,
			LAP JOINT-STS304 / STUB END-HDPE PE100
G	OD32	9EA	GASKET, KS 10K, FF, PTFE+EPDM, 3.0MM TH'K
G	OD20	2EA	GASKET, KS 10K, FF, PTFE+EPDM, 3.0MM TH'K
G2	OD32	1EA	GASKET, KS 10K, FF, PTFE+EPDM, BLIND, 3.0MM TH'K
B1	OD32	10SET	MACHINE BOLT & NYLON NUTS :STS 304 / W WASHERS
B1	OD20	2SET	MACHINE BOLT & NYLON NUTS :STS 304 / W WASHERS
LOTO	OD32	1EA	LOTO
INC	25tXOD32	10.3M	관 보온재(고무발포) + 알루미늄 CASING
INC	25tXOD20	0.6M	관 보온재(고무발포) + 알루미늄 CASING
FB	OD32	1EA	FLG BLIND & LINER SET, KS 10K, FF, BLIND-STS304
			/ LINDER-HDPE PE100 (MIN 5.0MM TH'K)

* PIPE : P/P1 * 90° ELBOW : E90 * 45° ELBOW : E45 * TEE : T * RED.TEE : TR * STUB-IN : STU * REINFORCING PAD : RP * CON.RED : RC * ECC.RED : RE * CON.SWAGE : RCS/RCS1 * ECC.SWAGE : RES/RES1 * NIPPLE : NP/NP1/NP2 * CAP : CAP/CAP1 * PLUG : PLG * FULL COUPLING : FC * HALF COUPLING : HF/HF1
* STUB-IN : STU * SOCKET(HDPE/PVC) : SC * SADDLE(HDPE) : SD * FLANGE : F/F1 * GASKET : G/G1/G2 * BOLT & NUT : B/B1 * BLIND FLANGE : FB/FB1 * GATE VA. : VG/VG1/VG2 * BALL VA. : VB/VBL0/VB1/VB1L0/VB2/VB2L0 * BUTTERFLY VA. : VF/VF4 * CHECK VA. : VC/VC1/VC2/VC3/VC4/VC5/VC6/VC7
* GLOBE VA. : VL/VL1/VL2 * DIAPHRAGM VA. : VD/VDL0 * DAMPER : VP * QUICK COUPLING : SQC * FLEXIBLE JOINT(STEEL) : FLXB * FLEXIBLE JOINT(RUBBER) : FLXR * FLEXIBLE JOINT(STEEL_PTFE LINED) : FLXL * FLEXIBLE HOSE : FLXH * STEAM TRAP : ST * SPRAY NOZZLE : SPN * EMERGENCY SHOWER : SSH
* STRAINER(Y-TYPE) : YSTR * STRAINER(T-TYPE) : TSTR * STRAINER(BUCKET-TYPE) : BSTR * ANCHOR PLATE : STOP * BIRD SCREEN : BS * ISOLATION KIT : IK * UNLOADING BOX : UB * AIR TRAP : AT * LOTO : LOTO * SIGHT GLASS : SG * PRESSURE GAUGE : PG * SHILED : SH * SPECIAL BOLT & NUT : BL/BL1

CLIENT SK hynix

34

INSULATION	CODE	E	CONDITION	PRESS. (kg/cm2g)	TEMP. (°C)
	THICK.	25	DESIGN	6.3	60
			OPERATING	4.7	AMB

AREA W14
UNIT RFA
REF. PLAN DWG. CJ-M15W14-PI-A30-R10001-B
REF. P & ID CJ-M15W14-PR-A20-000108

REV. NO.	DATE	DESCRIPTION	BY	CHK	APP'D
1	25.03.31	REVISED AS MARKED	황래종	안남후	박동영
0	25.01.24	APPROVED FOR CONSTRUCTION	황래종	안남후	박동영

CONTRACTOR SK ecoplant
COMMODITY PAC
LINE NO. 0D32-PAC-HP2-E-6521

PROJECT NAME M15X Ph4 Project
JOB NO. 22330D
SH'T NO. 01 / 02
REV. 1

경고 : 본 도면은 SK HYNIX의 기업비밀 자료로서, 어떠한 경우에도 목적 외 사용, 복제, 제3자에게 공개, 누설 및 유출할 수 없으며, 회사는 유포자의 불법 사용으로 피해가 발생할 경우 유포자에게 민/형사상 책임을 요구할 수 있음.

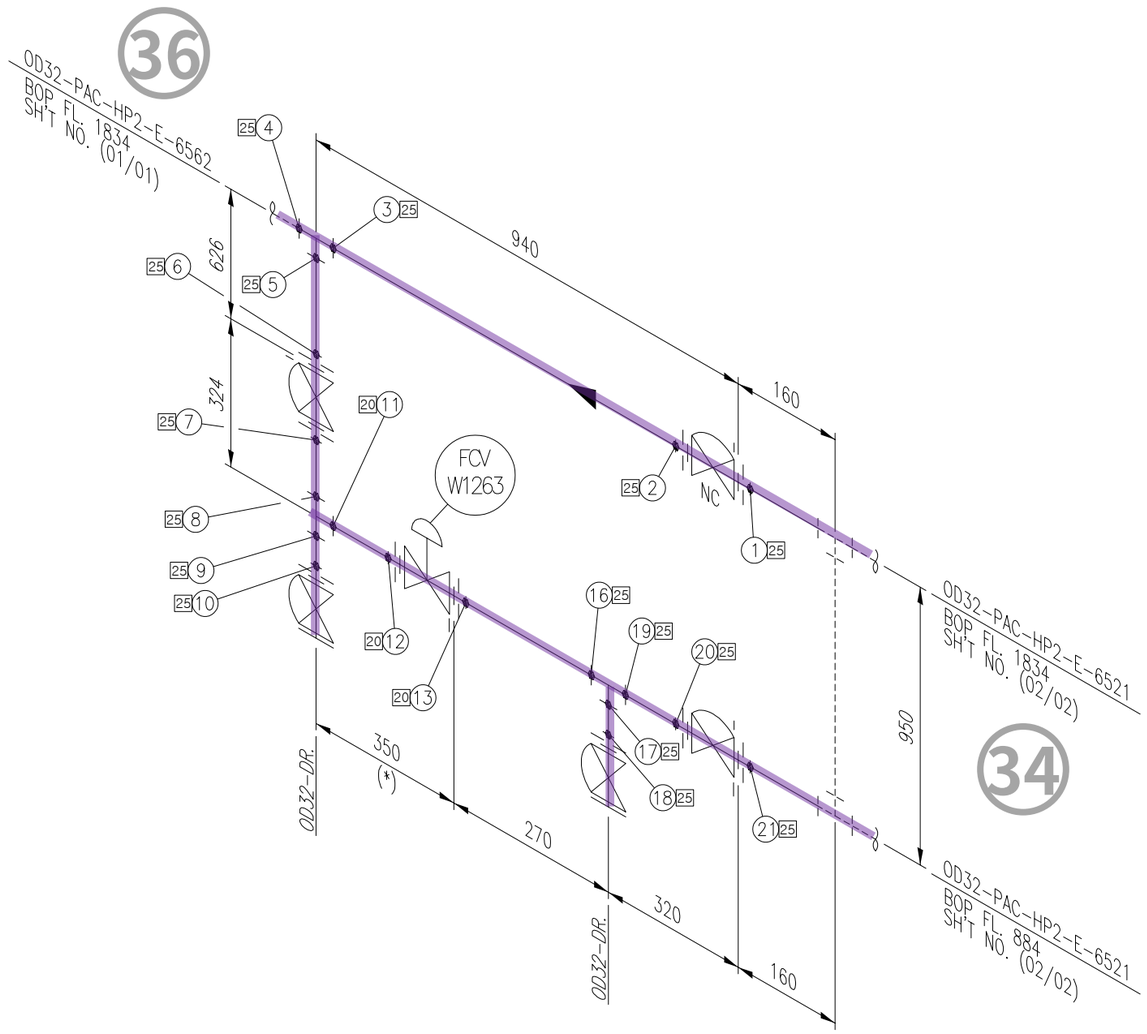

<NOTE>
1. (*) FIELD ADJUST

SK ecoplant

ITEM	SIZE	Q'TY	DESCRIPTION
		HP2	
P	OD32	3.2M	PIPE, HDPE PE100, PE, SOCKET FUSION, PN16/SDR11
~~P~~	~~OD25~~	~~0.6M~~	~~PIPE, HDPE PE100, PE, SOCKET FUSION, PN16/SDR11~~
T	OD32	2EA	TEE EQUAL, HDPE PE100, PE, SOCKET FUSION, PN16/SDR11
~~TR~~	~~OD32xOD25~~	1EA	TEE RED, ~~HDPE PE100, PE, SOCKET FUSION, PN16/SDR11~~
RC	~~OD32xOD25~~	1EA	REDUCER CON, ~~HDPE PE100, PE, SOCKET~~ FUSION,
			PN16/SDR11
VD	OD32	5EA	DIAPHRAGM VALVE, KS 10K, FF FLG'D, BODY-PP /
			TRIM-EPDM+PTFE DIAPHRAGM, BB, HANDWHEEL
F	OD32	10EA	FLG LAP JOINT / STUB END SET, KS 10K, FF,
			LAP JOINT-STS304 / STUB END-HDPE PE100
~~F~~	~~OD25~~	2EA	FLG LAP ~~JOINT / STUB END SET,~~ KS 10K, FF,
			LAP JOINT-STS304 ~~/ STUB END-~~HDPE PE100
FB	OD32	2EA	FLG BLIND & LINER SET, KS 10K, FF, BLIND-STS304
			/ LINDER-HDPE PE100 (MIN 5.0MM TH'K)
G	OD32	10EA	GASKET, KS 10K, FF, PTFE+EPDM, 3.0MM TH'K
~~G~~	~~OD25~~	~~2EA~~	~~GASKET, KS 10K, FF, PTFE+EPDM, 3.0MM TH'K~~
G2	OD32	2EA	GASKET, KS 10K, FF, PTFE+EPDM, BLIND, 3.0MM TH'K
B1	OD32	12SET	MACHINE BOLT & NYLON NUTS :STS 304 / W WASHERS
~~B1~~	~~OD25~~	~~2SET~~	~~MACHINE BOLT & NYLON NUTS~~ :STS 304 / W WASHERS
LOTO	OD32	1EA	LOTO
INC	25tXOD32	3.2M	관 보온재(고무발포) + 알루미늄 CASING
~~INC~~	~~25tXOD25~~	~~0.6M~~	~~관 보온재(고무발포) + 알루미늄 CASING~~

* PIPE : P/P1 * 90° ELBOW : E90 * 45° ELBOW : E45 * TEE : T * RED.TEE : TR * STUB-IN : STU * REINFORCING PAD : RP * CON.RED : RC * ECC.RED : RE * CON.SWAGE : RCS/RCS1 * ECC.SWAGE : RES/RES1 * NIPPLE : NP/NP1/NP2 * CAP : CAP/CAP1 * PLUG : PLG * FULL COUPLING : FC * HALF COUPLING : HF/HF1
* STUB-IN : STU * SOCKET(HDPE/PVC) : SC * SADDLE(HDPE) : SD * FLANGE : F/F1 * GASKET : G/G1/G2 * BOLT & NUT : B/B1 * BLIND FLANGE : FB/FB1 * GATE VA. : VG/VG1/VG2 * BALL VA. : VB/VBL0/VB1/VB1L0/VB2/VB2L0 * BUTTERFLY VA. : VF/VF4 * CHECK VA. : VC/VC1/VC2/VC3/VC4/VC5/VC6/VC7
* GLOBE VA. : VL/VL1/VL2 * DIAPHRAGM VA. : VD/VDL0 * DAMPER : VP * QUICK COUPLING : SQC * FLEXIBLE JOINT(STEEL) : FLXB * FLEXIBLE JOINT(RUBBER) : FLXR * FLEXIBLE JOINT(STEEL_PTFE LINED) : FLXL * FLEXIBLE HOSE : FLXH * STEAM TRAP : ST * SPRAY NOZZLE : SPN * EMERGENCY SHOWER : SSH
* STRAINER(Y-TYPE) : YSTR * STRAINER(T-TYPE) : TSTR * STRAINER(BUCKET-TYPE) : BSTR * ANCHOR PLATE : STOP * BIRD SCREEN : BS * ISOLATION KIT : IK * UNLOADING BOX : UB * AIR TRAP : AT * LOTO : LOTO * SIGHT GLASS : SG * PRESSURE GAUGE : PG * SHILED : SH * SPECIAL BOLT & NUT : BL/BL1

CLIENT
SK hynix
35

INSULATION	CODE	E	CONDITION	PRESS. (kg/cm2g)	TEMP. (°C)
	THICK.	25	DESIGN	6.3	60
			OPERATING	4.7	AMB

AREA W14
UNIT RFA
REF. PLAN DWG. CJ-M15W14-PI-A30-R10001-A
REF. P & ID CJ-M15W14-PR-A20-000108

REV. NO.	DATE	DESCRIPTION	BY	CHK	APP'D
1	25.03.31	REVISED AS MARKED	황래종	안남후	박동영
0	25.01.24	APPROVED FOR CONSTRUCTION	황래종	안남후	박동영

CONTRACTOR SK ecoplant
COMMODITY PAC
LINE NO. OD32-PAC-HP2-E-6521
PROJECT NAME M15X Ph4 Project
JOB NO. 22330D
SH'T NO. 02 / 02
REV. 1

경고 : 본 도면은 SK HYNIX의 기업비밀 자료로서, 어떠한 경우에도 목적 외 사용, 복제, 제3자에게 공개, 누설 및 유출할 수 없으며, 회사는 유포자의 불법 사용으로 피해가 발생할 경우 유포자에게 민/형사상 책임을 요구할 수 있음.

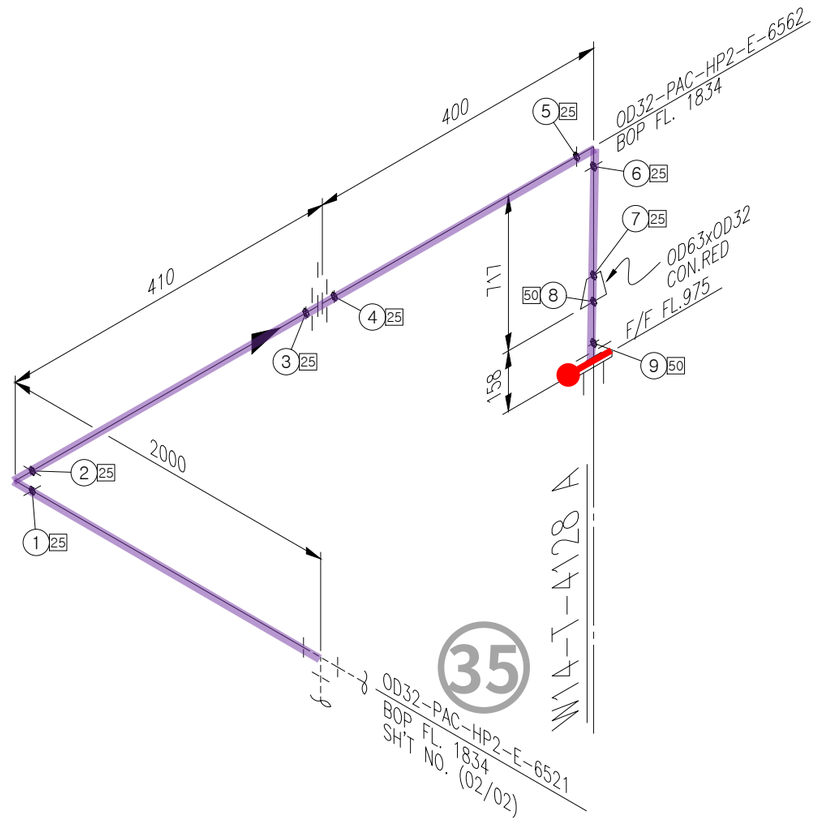

ITEM	SIZE	Q'TY	DESCRIPTION
		HP2	
P	OD63	0.2M	PIPE, HDPE PE100, PE, SOCKET FUSION, PN16/SDR11
P	OD32	3.7M	PIPE, HDPE PE100, PE, SOCKET FUSION, PN16/SDR11
E90	OD32	2EA	ELBOW 90 DEG, HDPE PE100, PE, SOCKET FUSION,
			PN16/SDR11
RC	OD63xOD32	1EA	REDUCER CON, HDPE PE100, PE, SOCKET FUSION,
			PN16/SDR11
F	OD63	1EA	FLG LAP JOINT / STUB END SET, KS 10K, FF,
			LAP JOINT-STS304 / STUB END-HDPE PE100
F	OD32	2EA	FLG LAP JOINT / STUB END SET, KS 10K, FF,
			LAP JOINT-STS304 / STUB END-HDPE PE100
G	OD63	1EA	GASKET, KS 10K, FF, PTFE+EPDM, 3.0MM TH'K
G	OD32	1EA	GASKET, KS 10K, FF, PTFE+EPDM, 3.0MM TH'K
B	OD63	1SET	MACHINE BOLT & NUTS :STS 304 / W WASHERS
B	OD32	1SET	MACHINE BOLT & NUTS :STS 304 / W WASHERS
INC	25tXOD63	0.2M	관 보온재(고무발포) + 알루미늄 CASING
INC	25tXOD32	3.7M	관 보온재(고무발포) + 알루미늄 CASING

<NOTE>
1. (*) FIELD ADJUST

* PIPE : P/P1 * 90° ELBOW : E90 * 45° ELBOW : E45 * TEE : T * RED.TEE : TR * STUB-IN : STU * REINFORCING PAD : RP * CON.RED : RC * ECC.RED : RE * CON.SWAGE : RCS/RCS1 * ECC.SWAGE : RES/RES1 * NIPPLE : NP/NP1/NP2 * CAP : CAP/CAP1 * PLUG : PLG * FULL COUPLING : FC * HALF COUPLING : HF/HF1
* STUB-IN : STU * SOCKET(HDPE/PVC) : SC * SADDLE(HDPE) : SD * FLANGE : F/F1 * GASKET : G/G1/G2 * BOLT & NUT : B/B1 * BLIND FLANGE : FB/FB1 * GATE VA. : VG/VG1/VG2 * BALL VA. : VB/VBLO/VB1/VB1LO/VB2/VB2LO * BUTTERFLY VA. : VF/VF4 * CHECK VA. : VC/VC1/VC2/VC3/VC4/VC5/VC6/VC7
* GLOBE VA. : VL/VL1/VL2 * DIAPHRAGM VA. : VD/VDLO * DAMPER : VP * QUICK COUPLING : SQC * FLEXIBLE JOINT(STEEL) : FLXB * FLEXIBLE JOINT(RUBBER) : FLXR * FLEXIBLE JOINT(STEEL_PTFE LINED) : FLXL * FLEXIBLE HOSE : FLXH * STEAM TRAP : ST * SPRAY NOZZLE : SPN * EMERGENCY SHOWER : SSH
* STRAINER(Y-TYPE) : YSTR * STRAINER(T-TYPE) : TSTR * STRAINER(BUCKET-TYPE) : BSTR * ANCHOR PLATE : STOP * BIRD SCREEN : BS * ISOLATION KIT : IK * UNLOADING BOX : UB * AIR TRAP : AT * LOTO : LOTO * SIGHT GLASS : SG * PRESSURE GAUGE : PG * SHILED : SH * SPECIAL BOLT & NUT : BL/BL1

CLIENT SK hynix

36

INSULATION	CODE	E	CONDITION	PRESS. (kg/cm2g)	TEMP. (°C)
	THICK.	25	DESIGN	6.3	60
			OPERATING	4.7	AMB

AREA W14
UNIT RFA
REF. PLAN DWG. CJ-M15W14-PI-A30-R10001-A
REF. P & ID CJ-M15W14-PR-A20-000108

REV. NO.	DATE	DESCRIPTION	BY	CHK	APP'D
1	25.03.31	REVISED AS MARKED	황래종	안남후	박동영
0	25.01.24	APPROVED FOR CONSTRUCTION	황래종	안남후	박동영

CONTRACTOR SK ecoplant
COMMODITY PAC
LINE NO. OD32-PAC-HP2-E-6562
PROJECT NAME M15X Ph4 Project
JOB NO. 22330D
SH'T NO. 01 / 01
REV. 1

경고 : 본 도면은 SK HYNIX의 기업비밀 자료로서, 어떠한 경우에도 목적 외 사용, 복제, 제3자에게 공개, 누설 및 유출할 수 없으며, 회사는 유포자의 불법 사용으로 피해가 발생할 경우 유포자에게 민/형사상 책임을 요구할 수 있음.