DRAWING LIST FOR TEST PACKAGE

PAC-524

PROJECT NO.: 22328D

PROJECT TITLE : M15X Ph2 Project

No	PKG No	UNIT	LINE NUMBER			P&ID		REMARK
			ISO DRAWING No	SHEET	REV	P&ID No	REV	
1	524	R2FA	OD32-PAC-HP2-E-7002-01	1 OF 1	1	CJ-M15W14-PR-A20-000152		
2	524	R2FA	OD32-PAC-HP2-E-7005-01	1 OF 1	1	CJ-M15W14-PR-A20-000503		
3	524	2FA	OD32-PAC-HP2-E-7002-01	1 OF 1	1	CJ-M15W14-PR-A20-000152		
4								
5								
6								
7								
8								
9								
10								
11								
12								

ITEM NO.		W14-T-4726
SERVICE		BRINE 2'nd NEUTRALIZATION TANK
Q'TY		1
TYPE		RECTANGULAR
SIZE	W x L x H | m	4.1 x 5.775 x 6.6 (EH 5.0)
CAPA.	m3	156.3 (EH 118.4)
HRT	min	34.1
MAT'L		P.C + FRP

ITEM NO.		W14-T-4727
SERVICE		BRINE 2'nd COAGULATION TANK
Q'TY		1
TYPE		RECTANGULAR
SIZE	W x L x H | m	4.2 x 5.775 x 6.6 (EH 5.0)
CAPA.	m3	160.1 (EH 121.3)
HRT	min	34.9
MAT'L		P.C + FRP

ITEM NO.		W14-T-4728
SERVICE		BRINE 2'nd FLOCCULATION TANK
Q'TY		1
TYPE		RECTANGULAR
SIZE	W x L x H | m	4.7 x 5.775 x 6.6 (EH 5.0)
CAPA.	m3	179.1 (EH 135.7)
HRT	min	39.1
MAT'L		P.C + FRP

ITEM NO.		W14-T-4729
SERVICE		BRINE 2'nd SETTLING TANK
Q'TY		1
TYPE		RECTANGULAR
SIZE	W x L x H | m	9.225 x 9.225 x 6.6 (EH 5.0)
CAPA.	m3	561.7 (EH 425.5)
HRT	hr	2.0
MAT'L		P.C + FRP

MAKER PACKAGE

ITEM NO.		W14-LP-4729
SERVICE		LAMELLAR PLATE
Q'TY		1
CAPA.	W x L x H | m	BY VENDOR
SURFACE LOAD		20 m3/m2.d 이하 (Qmax : 5,000m3/d)
MAT'L		ABS+SS304

MAKER PACKAGE

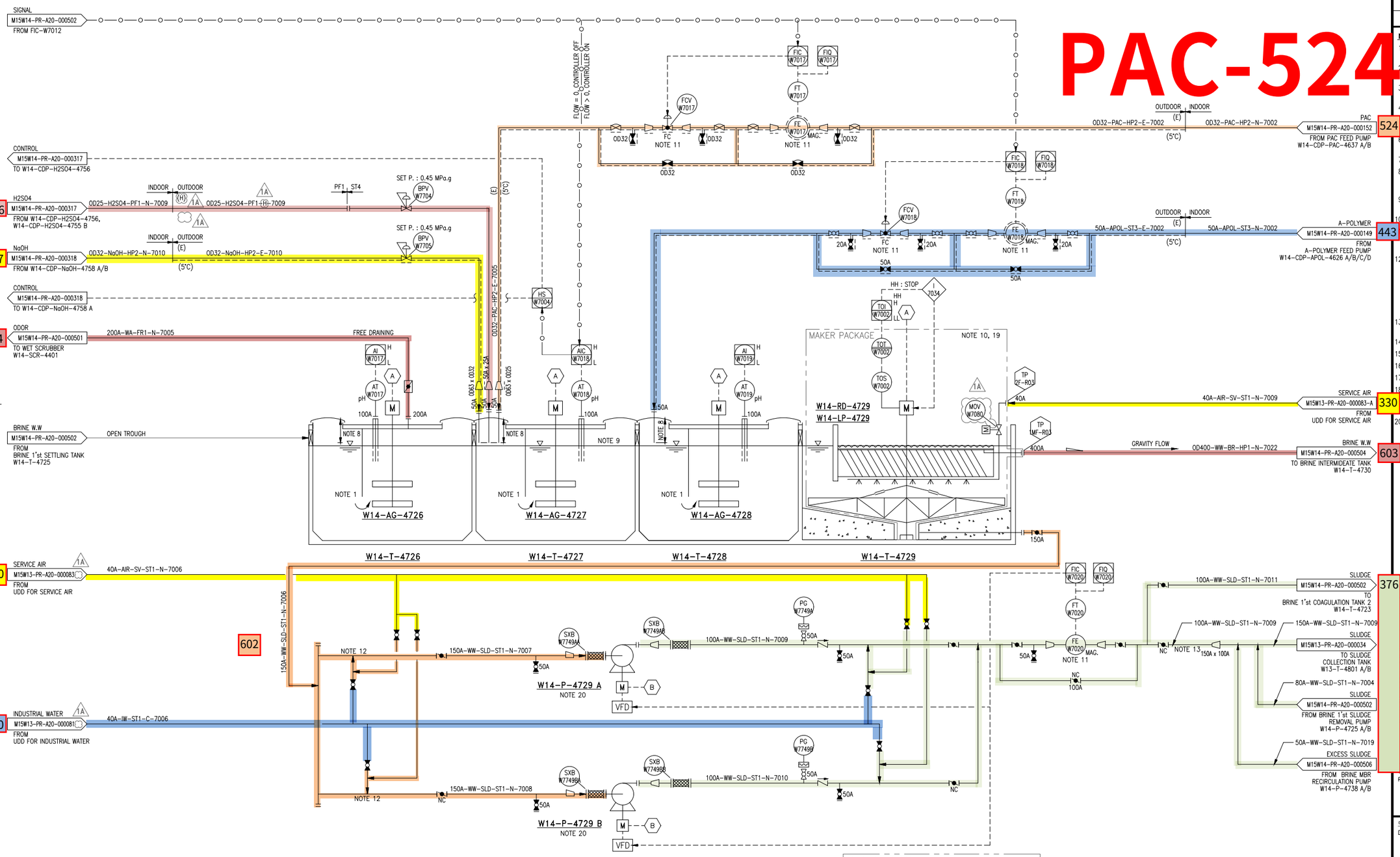

ITEM NO.		W14-AG-4726
SERVICE		BRINE 2'nd NEUTRALIZATION AGITATOR
Q'TY		1
TYPE		HYDRO PADDLE NOTE 15
SPEED	rpm	37
MAT'L		STS316L/STS316L
POWER	kW	11

ITEM NO.		W14-AG-4727
SERVICE		BRINE 2'nd COAGULATION AGITATOR
Q'TY		1
TYPE		HYDRO PADDLE NOTE 15
SPEED	rpm	30
MAT'L		STS316L/STS316L
POWER	kW	7.5

ITEM NO.		W14-AG-4728
SERVICE		BRINE 2'nd FLOCCULATION AGITATOR
Q'TY		1
TYPE		HYDRO PADDLE NOTE 15
SPEED	rpm	25
MAT'L		STS316L/STS316L
POWER	kW	3.7

MAKER PACKAGE

ITEM NO.		W14-RD-4729
SERVICE		BRINE 2'nd REDUCER DRIVER
Q'TY		1
TYPE		CYCLO REDUCER
CAPA.	m3/d	0.079
MAT'L		STS304/STS304
POWER	kW	1.5

ITEM NO.		W14-P-4729 A/B
SERVICE		BRINE 2'nd SLUDGE RETURN PUMP
Q'TY		1 + 1
TYPE		CENTRIFUGAL (VWF), VORTEX
CAPA.	m3/hr.ea x mH	40 x 30 (0.29MPa)
MAT'L		SSC13/SSC19
POWER	kW	30

대외비

KEY PLAN (1MF)

NOTE

1. BAFFLE 재질 : FRP
   BAFFLE 상부에 0.02 m2 이상 AIR HOLE 설치.
2. TANK와 HWL 이하로 연결되는 모든 배관은 BLOCK 밸브 설치할 것.
3. 2m 이상 높은 곳에 설치된 밸브는 CHAIN VALVE 또는 PLATFORM 구성할 것.
4. MANHOLE : 2개 이상 설치한다.
   MANHOLE COVER : FRP
5. 운전 시 CLOSE 되는 배관에는 LOTO 설치.
6. CENTRIFUGAL PUMP.
   MAT'L 표기 : CASING / IMPELLER
7. AGITATOR MAT'L 표기 : SHAFT/BLADE
8. TANK 내 유입시, 확인 확인이 가능하고, 비산이 되지 않도록 최소 깊이로 반영 할 것.
   (SLAB 으로부터 100mm 띄어질 것)
9. 내부 FRP LINING TANK의 SLEEVE는 SUS304 + FRP LINING 적용.
10. 위어 것수등의 상세사항은 추후 VENDOR에서 결정한다.
11. INSTRUMENT VENDOR 선정 후 CONTROL SCHEME 및 CONTROL VALVE INLET/OUTLET NOZZLE SIZE 확정 예정.
12. FLUSHING 용 WATER / AIR 배관은 45도 사선으로 연결할 것.

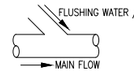

13. SLUDGE REMOVAL PUMP 토출 배관은 PUMP SUCTION 측의 TANK 수위보다 HIGH POINT 형성.
14. DELETED.
15. 추후 VENDOR에서 결정한다.
16. DELETED.
17. DELETED.
18. DELETED.
19. 경사판 청소 및 유지관리시설을 PACKAGE VENDOR 공급범위에 포함할 것.
20. SLUDGE PUMP는 TIMER에 의해 운전됨.

REV.	개정 사항 DESCRIPTION	날짜 DATE
1A	REVISED AFC	25.08.14
1	REVISED AFC	25.01.17
0	APPROVAL FOR CONSTRUCTION	24.10.31

제 도 DRAWN BY	이 인 학
검 토 CHECKED BY	한 진 희
승 인 APPROVED BY	박 동 영
제 작 사	SK 에코플랜트
공 사 명 PROJECT TITLE	M15X Ph4 WWT Project
도면명 DWG. TITLE	PIPING & INSTRUMENT DIAGRAM BRINE 2'nd COAGULATION & SETTLING TANK
축 척 SCALE	NONE
날 짜 DATE	2025. 08. 14
PROJECT NO.	22330D
도면번호 SHEET NO.	CJ-M15W14-PR-A20-000503
REV.	1A

C:WUsersWTOPWDesktopWP&ID251013W[M15X Ph-4 for 인허가]CAD FILE_0910WCJ-M15W14-PR-A20-000503 R1 P&ID FOR BRINE

ITEM NO.			W14-T-PAC-4605 B
SERVICE			PAC STORAGE TANK
Q'TY			1
TYPE			VERTICAL & CYLINDRICAL
SIZE	ID x H	m	4.0 x 4.5 (EH 4.2) /1A
CAPA.	m3		57 (EH 53)
MAT'L			FRP

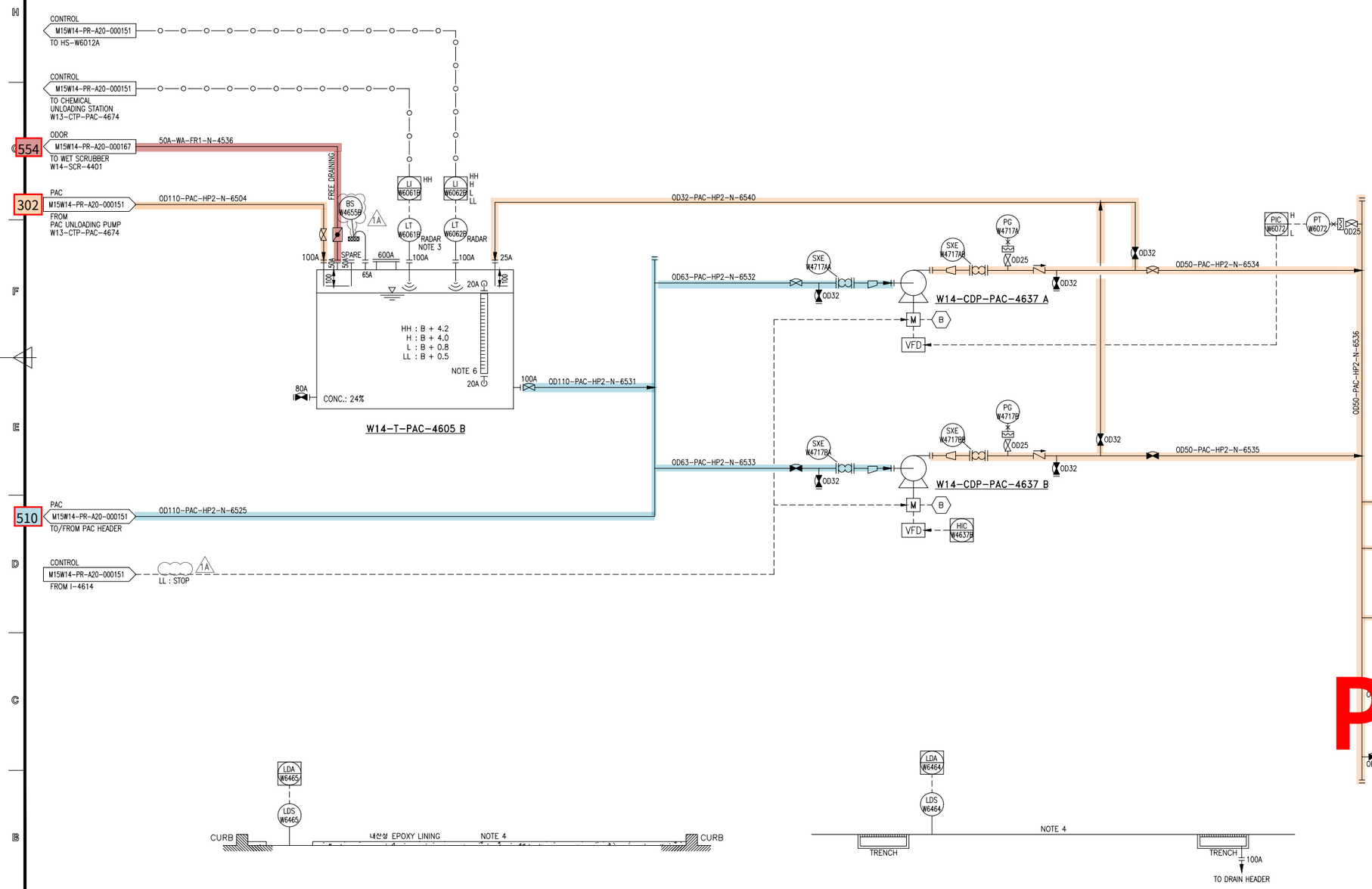

ITEM NO.		W14-CDP-PAC-4637 A/B
SERVICE		PAC FEED PUMP
Q'TY		1 + 1
TYPE		CENTRIFUGAL (VWF)
CAPA.	m3/hr.ea x MPa	4 x 0.46
MAT'L		FRP/FRP
POWER	kW	11 /1A

대외비

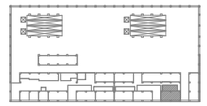

KEY PLAN (4F)

NOTE

1. CENTRIFUGAL PUMP MAT'L 표기 : CASING/IMPELLER
2. 약품종류에 따라 LINE 색상을 구분하여야 한다.
3. CHEMICAL UNLOADING STATION에서 LEVEL을 볼 수 있도록 한다.
4. CHEMICAL STORAGE TANK CURB 및 PUMP AREA에서 발생되는 DRAIN은 인근의 TRENCH로 집수되어, DRAIN HEADER로 이송된다.
5. 운전 시 CLOSE 되는 배관에는 LOTO 설치.
6. TANK의 액면 레벨 게이지는 VENDOR에서 공급한다.

수정 REV.	설명 DESCRIPTION	날짜 DATE
2A	REVISED AFC	25.08.14
2	REVISED AFC	25.01.17
1	REVISED AFC	24.10.31

제도 DRAWN BY	이 인 학
검토 CHECKED	한 진 희
승인 APPROVED	박 동 영
제작 사	SK 에코플랜트
공사명 PROJECT TITLE	M15X Ph4 WWT Project
도면명 DWG. TITLE	PIPING & INSTRUMENT DIAGRAM PAC STORAGE TANK & FEED PUMP (2/2)
축척 SCALE	NONE
날짜 DATE	2025. 08. 14
PROJECT NO.	22330D
도면번호 SHEET NO.	CJ-M15W14-PR-A20-000152
REV.	2A

PAC-524

A1(594x841mm ±2mm)

경고! 본 도면은 SK 에코플랜트 기밀정보 자료로서 이 도면의 전부 또는 일부를 무단 복제 및 사용, 출판 및 제3자에게 고지 또는 누설할 수 없으며, 위 사항을 위반하여 발생한 모든 문제에 대해 법적 책임을 지게 됩니다.

C:WUsersWTOPWDesktopWP&ID251013W[M15X Ph-4 for 인허가]CAD FILE_0910WCJ-M15W14-PR-A20-000152 R2 P&ID FOR PAC S

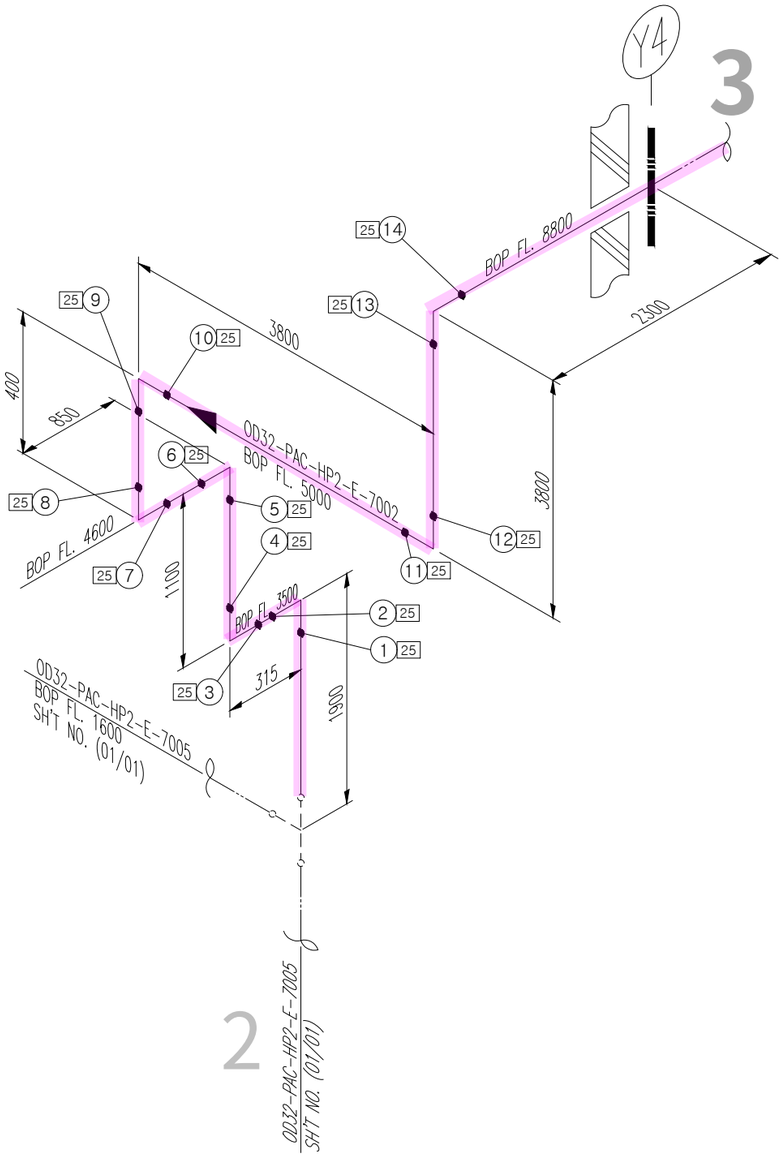

SK ecoplant

ITEM	SIZE	Q'TY	DESCRIPTION
		HP2	
P	OD32	14.5M	PIPE, HDPE PE100, PE, SOCKET FUSION, PN16/SDR11
E90	OD32	7EA	ELBOW 90 DEG, HDPE PE100, PE, SOCKET FUSION, PN16/SDR11
1 INC	25tXOD32	14.5M	관 보온재(고무발포) + 알루미늄 CASING 1

<NOTE>
1. TRAY & ANGLE,CHANNEL SUPPORT가 적용되는 배관 ELEVATION은 현장 맞춤으로 한다.
2. (*) FIELD ADJUST

* PIPE : P/P1 * 90° ELBOW : E90 * 45° ELBOW : E45 * TEE : T * RED.TEE : TR * STUB-IN : STU * REINFORCING PAD : RP * CON.RED : RC * ECC.RED : RE * CON.SWAGE : RCS/RCS1 * ECC.SWAGE : RES/RES1 * NIPPLE : NP/NP1/NP2 * CAP : CAP/CAP1 * PLUG : PLG * FULL COUPLING : FC * HALF COUPLING : HF/HF1
* STUB-IN : STU * SOCKET(HDPE/PVC) : SC * SADDLE(HDPE) : SD * FLANGE : F/F1 * GASKET : G/G1/G2 * BOLT & NUT : B/B1 * BLIND FLANGE : FB/FB1 * GATE VA. : VG/VG1/VG2 * BALL VA. : VB/VBLO/VB1/VB1LO/VB2/VB2LO * BUTTERFLY VA. : VF/VF4 * CHECK VA. : VC/VC1/VC2/VC3/VC4/VC5/VC6/VC7
* GLOBE VA. : VL/VL1/VL2 * DIAPHRAGM VA. : VD/VDLO * DAMPER : VP * QUICK COUPLING : SQC * FLEXIBLE JOINT(STEEL) : FLXB * FLEXIBLE JOINT(RUBBER) : FLXR * FLEXIBLE JOINT(STEEL_PTFE LINED) : FLXL * FLEXIBLE HOSE : FLXH * STEAM TRAP : ST * SPRAY NOZZLE : SPN * EMERGENCY SHOWER : SSH
* STRAINER(Y-TYPE) : YSTR * STRAINER(T-TYPE) : TSTR * STRAINER(BUCKET-TYPE) : BSTR * ANCHOR PLATE : STOP * BIRD SCREEN : BS * ISOLATION KIT : IK * UNLOADING BOX : UB * AIR TRAP : AT * LOTO : LOTO * SIGHT GLASS : SG * PRESSURE GAUGE : PG * SHILED : SH * SPECIAL BOLT & NUT : BL/BL1

CLIENT SK hynix 1

INSULATION	CODE	E	CONDITION	PRESS. (kg/cm2g)	TEMP. (°C)
	THICK.	25	DESIGN	6.4	60
			OPERATING	4	AMB

AREA W14
UNIT R2FA
REF. PLAN DWG. CJ-M15W14-PI-A30-020016-C
REF. P & ID CJ-M15W14-PR-A20-000503

REV. NO.	DATE	DESCRIPTION	BY	CHK	APP'D
1	25.03.31	REVISED AS MARKED	황래종	안남후	박동영
0	25.01.24	APPROVED FOR CONSTRUCTION	황래종	안남후	박동영

CONTRACTOR SK ecoplant
PROJECT NAME M15X Ph4 Project
COMMODITY PAC
JOB NO. 22330D
LINE NO. OD32-PAC-HP2-E-7002
SH'T NO. 01 / 01
REV. 1

경고 : 본 도면은 SK HYNIX의 기업비밀 자료로서, 어떠한 경우에도 목적 외 사용, 복제, 제3자에게 공개, 누설 및 유출할 수 없으며, 회사는 유포자의 불법 사용으로 피해가 발생할 경우 유포자에게 민/형사상 책임을 요구할 수 있음.

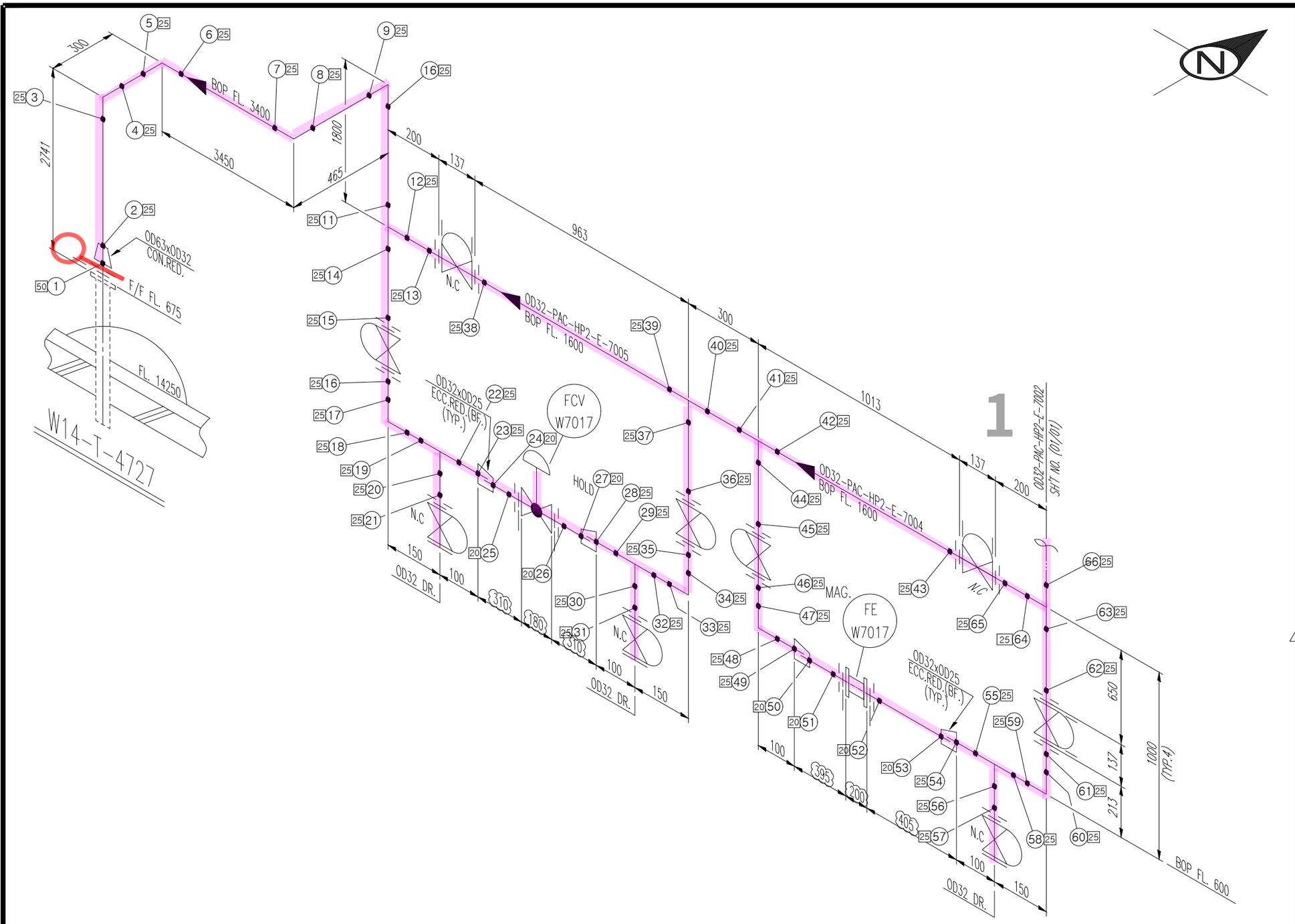

<NOTE>
1. TRAY & ANGLE,CHANNEL SUPPORT가 적용되는 배관 ELEVATION은 현장 맞춤으로 한다.
2. (*) FIELD ADJUST

ITEM	SIZE	Q'TY	DESCRIPTION
		HP2	
P	OD25	1.8M	PIPE, HDPE PE100, PE, SOCKET FUSION, PN16/SDR11
	OD32	15.9M	PIPE, HDPE PE100, PE, SOCKET FUSION, PN16/SDR11
E90	OD32	8EA	ELBOW 90 DEG, HDPE PE100, PE, SOCKET FUSION,
			PN16/SDR11
T	OD32	7EA	TEE EQUAL, HDPE PE100, PE, SOCKET FUSION, PN16/SDR11
RC	OD63xOD32	1EA	REDUCER CON, HDPE PE100, PE, SOCKET FUSION,
			PN16/SDR11
RE	OD32xOD25	4EA	REDUCER ECC, HDPE PE100, PE, BUTT FUSION,
			PN16/SDR11
VD	OD32	8EA	DIAPHRAGM VALVE, KS 10K, FF FLG'D, BODY-PP /
			TRIM-EPDM+PTFE DIAPHRAGM, BB, HANDWHEEL
F	OD25	4EA	FLG LAP JOINT / STUB END SET, KS 10K, FF,
			LAP JOINT-STS304 / STUB END-HDPE PE100
	OD32	15EA	FLG LAP JOINT / STUB END SET, KS 10K, FF,
			LAP JOINT-STS304 / STUB END-HDPE PE100
	OD63	1EA	FLG LAP JOINT / STUB END SET, KS 10K, FF,
			LAP JOINT-STS304 / STUB END-HDPE PE100
FB	OD32	3EA	FLG BLIND & LINER SET, KS 10K, FF, BLIND-STS304
			/ LINDER-HDPE PE100 (MIN 5.0MM TH'K)
G	OD25	4EA	GASKET, KS 10K, FF, PTFE+EPDM, 3.0MM TH'K
	OD32	15EA	GASKET, KS 10K, FF, PTFE+EPDM, 3.0MM TH'K
	OD63	1EA	GASKET, KS 10K, FF, PTFE+EPDM, 3.0MM TH'K
G2	OD32	3EA	GASKET, KS 10K, FF, PTFE+EPDM, BLIND, 3.0MM TH'K
B	OD25	4SET	MACHINE BOLT & NUTS :STS 304 / W WASHERS
	OD32	18SET	MACHINE BOLT & NUTS :STS 304 / W WASHERS
	OD63	15SET	MACHINE BOLT & NUTS :STS 304 / W WASHERS
LOTO	OD32	5EA	LOTO
INC	25tXOD25	1.8M	관 보온재(고무발포) + 알루미늄 CASING
1 INC	25tXOD32	15.9M	관 보온재(고무발포) + 알루미늄 CASING 1
INC	25tXOD63	0.1M	관 보온재(고무발포) + 알루미늄 CASING

* PIPE : P/P1 * 90° ELBOW : E90 * 45° ELBOW : E45 * TEE : T * RED.TEE : TR * STUB-IN : STU * REINFORCING PAD : RP * CON.RED : RC * ECC.RED : RE * CON.SWAGE : RCS/RCS1 * ECC.SWAGE : RES/RES1 * NIPPLE : NP/NP1/NP2 * CAP : CAP/CAP1 * PLUG : PLG * FULL COUPLING : FC * HALF COUPLING : HF/HF1
* STUB-IN : STU * SOCKET(HDPE/PVC) : SC * SADDLE(HDPE) : SD * FLANGE : F/F1 * GASKET : G/G1/G2 * BOLT & NUT : B/B1 * BLIND FLANGE : FB/FB1 * GATE VA. : VG/VG1/VG2 * BALL VA. : VB/VBLO/VB1/VB1LO/VB2/VB2LO * BUTTERFLY VA. : VF/VF4 * CHECK VA. : VC/VC1/VC2/VC3/VC4/VC5/VC6/VC7
* GLOBE VA. : VL/VL1/VL2 * DIAPHRAGM VA. : VD/VDLO * DAMPER : VP * QUICK COUPLING : SQC * FLEXIBLE JOINT(STEEL) : FLXB * FLEXIBLE JOINT(RUBBER) : FLXR * FLEXIBLE JOINT(STEEL_PTFE LINED) : FLXL * FLEXIBLE HOSE : FLXH * STEAM TRAP : ST * SPRAY NOZZLE : SPN * EMERGENCY SHOWER : SSH
* STRAINER(Y-TYPE) : YSTR * STRAINER(T-TYPE) : TSTR * STRAINER(BUCKET-TYPE) : BSTR * ANCHOR PLATE : STOP * BIRD SCREEN : BS * ISOLATION KIT : IK * UNLOADING BOX : UB * AIR TRAP : AT * LOTO : LOTO * SIGHT GLASS : SG * PRESSURE GAUGE : PG * SHILED : SH * SPECIAL BOLT & NUT : BL/BL1

CLIENT SK hynix

INSULATION	CODE	E	CONDITION	PRESS. (kg/cm2g)	TEMP. (°C)
	THICK.	25	DESIGN	6.4	60
			OPERATING	4	AMB

AREA W14
UNIT R2FA
REF. PLAN DWG. CJ-M15W14-PI-A30-020016-A
REF. P & ID CJ-M15W14-PR-A20-000503

REV. NO.	DATE	DESCRIPTION	BY	CHK	APP'D
1	25.03.31	REVISED AS MARKED	황래종	안남후	박동영
0	25.01.24	APPROVED FOR CONSTRUCTION	황래종	안남후	박동영

CONTRACTOR SK ecoplant
PROJECT NAME M15X Ph4 Project
COMMODITY PAC
JOB NO. 22330D
LINE NO. OD32-PAC-HP2-E-7005
SH'T NO. 01 / 01
REV. 1

경고 : 본 도면은 SK HYNIX의 기업비밀 자료로서, 어떠한 경우에도 목적 외 사용, 복제, 제3자에게 공개, 누설 및 유출할 수 없으며, 회사는 유포자의 불법 사용으로 피해가 발생할 경우 유포자에게 민/형사상 책임을 요구할 수 있음.

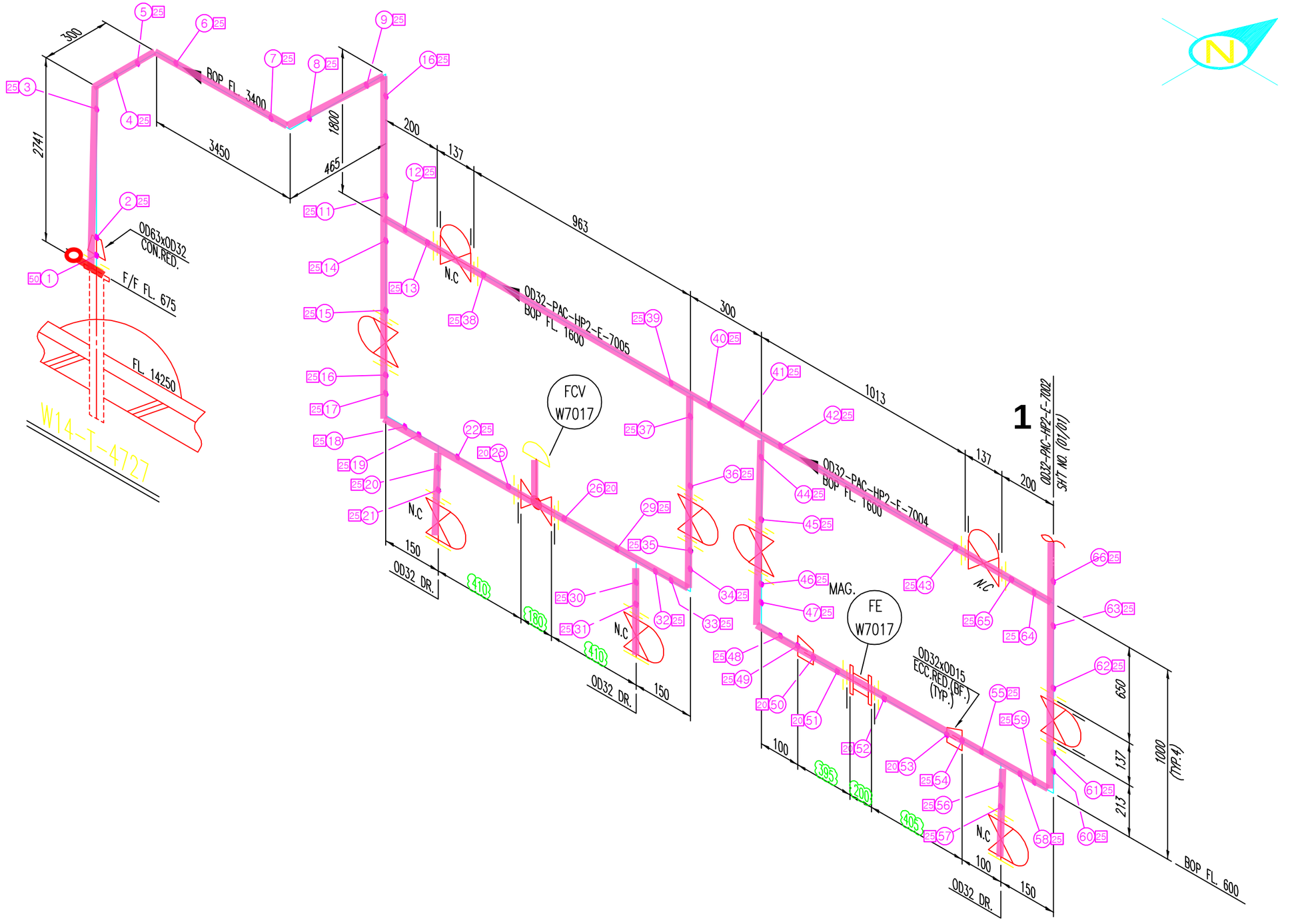

<NOTE>
1. TRAY & ANGLE,CHANNEL SUPPORT가 적용되는 배관 ELEVATION은 현장 맞춤으로 한다.
2. (*) FIELD ADJUST

ITEM	SIZE	Q'TY	DESCRIPTION
		HP2	
P	OD25	1.8M	PIPE, HDPE PE100, PE, SOCKET FUSION, PN16/SDR11
	OD32	15.9M	PIPE, HDPE PE100, PE, SOCKET FUSION, PN16/SDR11
E90	OD32	8EA	ELBOW 90 DEG, HDPE PE100, PE, SOCKET FUSION,
			PN16/SDR11
T	OD32	7EA	TEE EQUAL, HDPE PE100, PE, SOCKET FUSION, PN16/SDR11
RC	OD63xOD32	1EA	REDUCER CON, HDPE PE100, PE, SOCKET FUSION,
			PN16/SDR11
RE	OD32xOD15	2EA	REDUCER ECC, HDPE PE100, PE, BUTT FUSION,
			PN16/SDR11
VD	OD32	8EA	DIAPHRAGM VALVE, KS 10K, FF FLG'D, BODY-PP /
			TRIM-EPDM+PTFE DIAPHRAGM, BB, HANDWHEEL
F	OD25	4EA	FLG LAP JOINT / STUB END SET, KS 10K, FF,
			LAP JOINT-STS304 / STUB END-HDPE PE100
	OD32	15EA	FLG LAP JOINT / STUB END SET, KS 10K, FF,
			LAP JOINT-STS304 / STUB END-HDPE PE100
	OD63	1EA	FLG LAP JOINT / STUB END SET, KS 10K, FF,
			LAP JOINT-STS304 / STUB END-HDPE PE100
FB	OD32	3EA	FLG BLIND & LINER SET, KS 10K, FF, BLIND-STS304
			/ LINDER-HDPE PE100 (MIN 5.0MM TH'K)
G	OD25	4EA	GASKET, KS 10K, FF, PTFE+EPDM, 3.0MM TH'K
	OD32	15EA	GASKET, KS 10K, FF, PTFE+EPDM, 3.0MM TH'K
	OD63	1EA	GASKET, KS 10K, FF, PTFE+EPDM, 3.0MM TH'K
G2	OD32	3EA	GASKET, KS 10K, FF, PTFE+EPDM, BLIND, 3.0MM TH'K
B	OD25	4SET	MACHINE BOLT & NUTS :STS 304 / W WASHERS
	OD32	18SET	MACHINE BOLT & NUTS :STS 304 / W WASHERS
	OD63	15SET	MACHINE BOLT & NUTS :STS 304 / W WASHERS
LOTO	OD32	5EA	LOTO
INC	25tXOD25	1.8M	관 보온재(고무발포) + 알루미늄 CASING
INC	25tXOD32	15.9M	관 보온재(고무발포) + 알루미늄 CASING
INC	25tXOD63	0.1M	관 보온재(고무발포) + 알루미늄 CASING

* PIPE : P/P1 * 90° ELBOW : E90 * 45° ELBOW : E45 * TEE : T * RED.TEE : TR * STUB-IN : STU * REINFORCING PAD : RP * CON.RED : RC * ECC.RED : RE * CON.SWAGE : RCS/RCS1 * ECC.SWAGE : RES/RES1 * NIPPLE : NP/NP1/NP2 * CAP : CAP/CAP1 * PLUG : PLG * FULL COUPLING : FC * HALF COUPLING : HF/HF1
* STUB-IN : STU * SOCKET(HDPE/PVC) : SC * SADDLE(HDPE) : SD * FLANGE : F/F1 * GASKET : G/G1/G2 * BOLT & NUT : B/B1 * BLIND FLANGE : FB/FB1 * GATE VA. : VG/VG1/VG2 * BALL VA. : VB/VBL0/VB1/VB1L0/VB2/VB2L0 * BUTTERFLY VA. : VF/VF4 * CHECK VA. : VC/VC1/VC2/VC3/VC4/VC5/VC6/VC7
* GLOBE VA. : VL/VL1/VL2 * DIAPHRAGM VA. : VD/VDL0 * DAMPER : VP * QUICK COUPLING : SQC * FLEXIBLE JOINT(STEEL) : FLXB * FLEXIBLE JOINT(RUBBER) : FLXR * FLEXIBLE JOINT(STEEL_PTFE LINED) : FLXL * FLEXIBLE HOSE : FLXH * STEAM TRAP : ST * SPRAY NOZZLE : SPN * EMERGENCY SHOWER : SSH
* STRAINER(Y-TYPE) : YSTR * STRAINER(T-TYPE) : TSTR * STRAINER(BUCKET-TYPE) : BSTR * ANCHOR PLATE : STOP * BIRD SCREEN : BS * ISOLATION KIT : IK * UNLOADING BOX : UB * AIR TRAP : AT * LOTO : LOTO * SIGHT GLASS : SG * PRESSURE GAUGE : PG * SHILED : SH * SPECIAL BOLT & NUT : BL/BL1

CLIENT: SK hynix

INSULATION	CODE	E	CONDITION	PRESS. (kg/cm2g)	TEMP. (°C)
	THICK.	25	DESIGN	6.4	60
			OPERATING	4	AMB

AREA: W14
UNIT: R2FA
REF. PLAN DWG.: CJ-M15W14-PI-A30-020016-A
REF. P & ID: CJ-M15W14-PR-A20-000503

REV. NO.	DATE	DESCRIPTION	BY	CHK	APP'D
1	25.03.31	REVISED AS MARKED	황래종	안남후	박동영
0	25.01.24	APPROVED FOR CONSTRUCTION	황래종	안남후	박동영

CONTRACTOR: SK ecoplant
COMMODITY: PAC
LINE NO.: OD32-PAC-HP2-E-7005
PROJECT NAME: M15X Ph4 Project
JOB NO.: 22330D
SH'T NO.: 01 / 01
REV.: 1

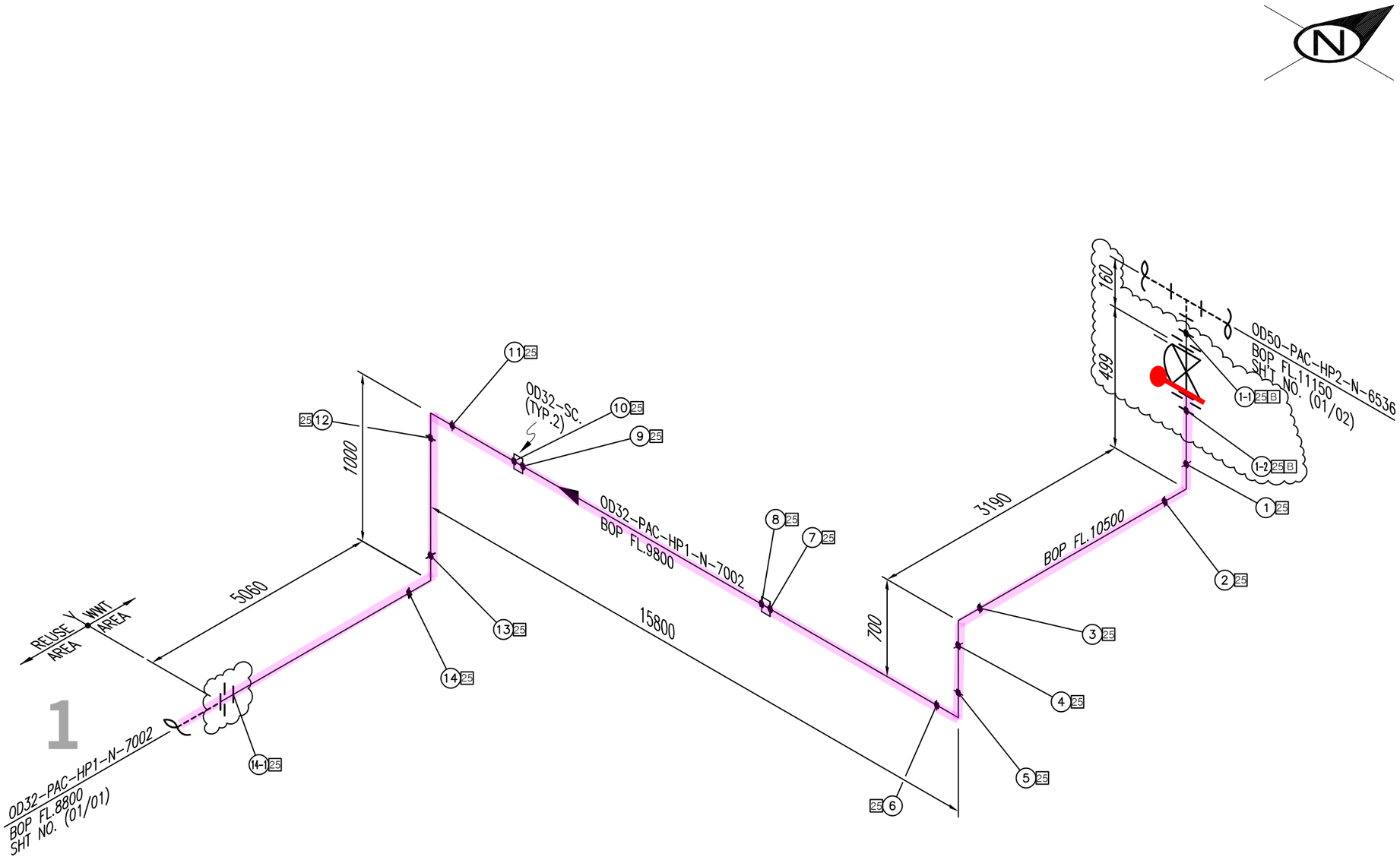

ITEM	SIZE	Q'TY	DESCRIPTION
		HP1	
P	OD32	26.4M	PIPE, HDPE PE100, PE, SOCKET FUSION, PN16/SDR11
E90	OD32	5EA	ELBOW 90 DEG, HDPE PE100, PE, SOCKET FUSION,
			PN16/SDR11
SC	OD32	2EA	SOCKET, HDPE PE100, SOCKET FUSION, PN16/SDR11
F	OD32	3EA	FLG LAP JOINT / STUB END SET, KS 10K, FF,
			LAP JOINT-STS304 / STUB END-HDPE PE100
G	OD32	2EA	GASKET, KS 10K, FF, PTFE+EPDM, 3.0MM TH'K
B	OD32	2SET	MACHINE BOLT & NUTS :STS 304 / W WASHERS
VD	OD32	2EA	DIAPHRAGM VALVE, KS 10K, FF FLG'D, BODY-PP /
			TRIM-EPDM+PTFE DIAPHRAGM, BB, HANDWHEEL

<NOTE>
1. TRAY & ANGLE,CHANNEL SUPPORT가 적용되는 배관 ELEVATION은 현장 맞춤으로 한다.
2. (*) FIELD ADJUST

* PIPE : P/P1 * 90° ELBOW : E90 * 45° ELBOW : E45 * TEE : T * RED.TEE : TR * STUB-IN : STU * REINFORCING PAD : RP * CON.RED : RC * ECC.RED : RE * CON.SWAGE : RCS/RCS1 * ECC.SWAGE : RES/RES1 * NIPPLE : NP/NP1/NP2 * CAP : CAP/CAP1 * PLUG : PLG * FULL COUPLING : FC * HALF COUPLING : HF/HF1
* STUB-IN : STU * SOCKET(HDPE/PVC) : SC * SADDLE(HDPE) : SD * FLANGE : F/F1 * GASKET : G/G1/G2 * BOLT & NUT : B/B1 * BLIND FLANGE : FB/FB1 * GATE VA. : VG/VG1/VG2 * BALL VA. : VB/VBLO/VB1/VB1LO/VB2/VB2LO * BUTTERFLY VA. : VF/VF4 * CHECK VA. : VC/VC1/VC2/VC3/VC4/VC5/VC6/VC7
* GLOBE VA. : VL/VL1/VL2 * DIAPHRAGM VA. : VD/VDLO * DAMPER : VP * QUICK COUPLING : SQC * FLEXIBLE JOINT(STEEL) : FLXB * FLEXIBLE JOINT(RUBBER) : FLXR * FLEXIBLE JOINT(STEEL_PTFE LINED) : FLXL * FLEXIBLE HOSE : FLXH * STEAM TRAP : ST * SPRAY NOZZLE : SPN * EMERGENCY SHOWER : SSH
* STRAINER(Y-TYPE) : YSTR * STRAINER(T-TYPE) : TSTR * STRAINER(BUCKET-TYPE) : BSTR * ANCHOR PLATE : STOP * BIRD SCREEN : BS * ISOLATION KIT : IK * UNLOADING BOX : UB * AIR TRAP : AT * LOTO : LOTO * SIGHT GLASS : SG * PRESSURE GAUGE : PG * SHILED : SH * SPECIAL BOLT & NUT : BL/BL1

INSULATION	CODE	N	CONDITION	PRESS. (kg/cm2g)	TEMP. (°C)
	THICK.	–	DESIGN	1	60
			OPERATING	ATM	AMB

AREA W14
UNIT 2FA
REF. PLAN DWG. CJ-M15W14-PI-A30-020011-H
REF. P & ID CJ-M15W14-PR-A20-000152

REV. NO.	DATE	DESCRIPTION	BY	CHK	APP'D
0	24.12.20	APPROVED FOR CONSTRUCTION	황래종	안남후	박동영

CLIENT SK hynix 3

CONTRACTOR SK ecoplant
PROJECT NAME M15X Ph4 Project
COMMODITY PAC
JOB NO. 22330D
LINE NO. OD32-PAC-HP1-N-7002
SH'T NO. 01 / 01
REV. 0

경고 : 본 도면은 SK HYNIX의 기업비밀 자료로서, 어떠한 경우에도 목적 외 사용, 복제, 제3자에게 공개, 누설 및 유출할 수 없으며, 회사는 유포자의 불법 사용으로 피해가 발생할 경우 유포자에게 민/형사상 책임을 요구할 수 있음.