DRAWING LIST FOR TEST PACKAGE

WW-SLD-534

PROJECT NO.: 22328D

PROJECT TITLE : M15X Ph2 Project

No	PKG No	UNIT	LINE NUMBER			P&ID		REMARK
			ISO DRAWING No	SHEET	REV	P&ID No	REV	
1	534	5FA	150A-WW-SLD-ST1-N-8528-01	1 OF 1	0	CJ-M15W14-PR-A20-000108	1A	
2	534	5FA	150A-WW-SLD-ST1-N-8529-01	1 OF 1	0	CJ-M15W14-PR-A20-000108	1A	
3	534	5FA	150A-WW-SLD-ST1-N-8530-01	1 OF 1	0	CJ-M15W14-PR-A20-000108	1A	
4	534	5FA	40A-IW-ST1-N-9566-01	1 OF 1	0	CJ-M15W14-PR-A20-000108	1A	
5	534	5FA	40A-IW-ST1-N-9566-02	1 OF 2	0	CJ-M15W14-PR-A20-000108	1A	

ITEM NO.		W14-T-4127 A
SERVICE		CIF 2'nd NEUTRALIZATION TANK
Q'TY		1
TYPE		RECTANGULAR
SIZE	W x L x H | m	5.5 x 4.925 x 8.15 (EH 6.5)
CAPA.	m3	220.8 (EH 176.1)
HRT	min	1A 34.9
MAT'L		P.C + FRP

ITEM NO.		W14-T-4128 A
SERVICE		CIF 2'nd COAGULATION TANK
Q'TY		1
TYPE		RECTANGULAR
SIZE	W x L x H | m	5.5 x 4.925 x 8.15 (EH 6.5)
CAPA.	m3	220.8 (EH 176.1)
HRT	min	1A 34.9
MAT'L		P.C + FRP

ITEM NO.		W14-T-4129 A
SERVICE		CIF 2'nd FLOCCULATION TANK
Q'TY		1
TYPE		RECTANGULAR
SIZE	W x L x H | m	5.7 x 4.925 x 8.15 (EH 6.5)
CAPA.	m3	228.8 (EH 182.5)
HRT	min	1A 36.1
MAT'L		P.C + FRP

ITEM NO.		W14-T-4130 A
SERVICE		CIF 2'nd SETTLING TANK
Q'TY		1
TYPE		RECTANGULAR
SIZE	W x L x H | m	11.7 x 10.825 x 8.15 (EH 6.5)
CAPA.	m3	1032.2 (EH 823.2)
HRT	hr	1A 2.7
MAT'L		P.C + FRP

MAKER PACKAGE

ITEM NO.		W14-LP-4130 A
SERVICE		LAMELLAR PLATE
Q'TY		1
CAPA.	W x L x H | m	BY VENDOR
SURFACE LOAD		20 m3/m2.d 이하 (Qmax : 6,450m3/d)
MAT'L		ABS+SS304

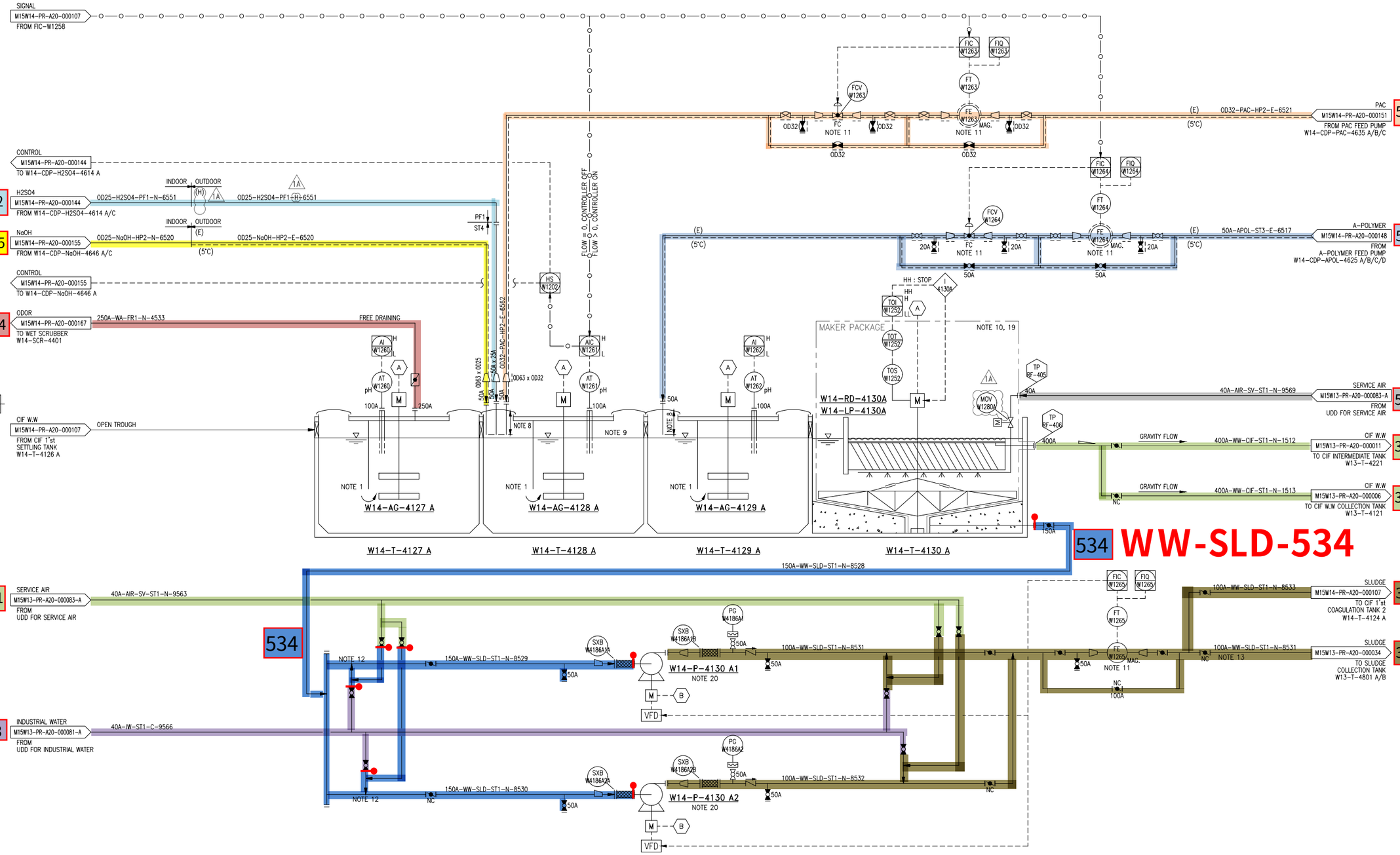

ITEM NO.		W14-AG-4127 A
SERVICE		CIF 2'nd NEUTRALIZATION AGITATOR
Q'TY		1
TYPE		HYDRO PADDLE NOTE 15
SPEED	rpm	1A 30
MAT'L		STS316L/STS316L
POWER	kW	1A 15

ITEM NO.		W14-AG-4128 A
SERVICE		CIF 2'nd COAGULATION AGITATOR
Q'TY		1
TYPE		HYDRO PADDLE NOTE 15
SPEED	rpm	1A 25
MAT'L		STS316L/STS316L
POWER	kW	1A 11

ITEM NO.		W14-AG-4129 A
SERVICE		CIF 2'nd FLOCCULATION AGITATOR
Q'TY		1
TYPE		HYDRO PADDLE NOTE 15
SPEED	rpm	1A 25
MAT'L		STS316L/STS316L
POWER	kW	1A 7.5

MAKER PACKAGE

ITEM NO.		W14-RD-4130 A
SERVICE		CIF 2'nd REDUCER DRIVER
Q'TY		1
TYPE		CYCLO REDUCER
CAPA.	m3/hr.ea x mH	1A 0.067
MAT'L		STS304/STS304
POWER	kW	1A 2.2

ITEM NO.		W14-P-4130 A1/A2
SERVICE		CIF 2'nd SLUDGE RETURN PUMP
Q'TY		1 + 1
TYPE		CENTRIFUGAL (VVVF), VORTEX
CAPA.	m3/hr.ea x mH	50 x 30 (0.29MPa)
MAT'L		SSC13/SSC19
POWER	kW	30 1A

대외비

KEY PLAN (5F)

NOTE

1. BAFFLE 재질 : FRP
   BAFFLE 상부에 0.02 m2 이상 AIR HOLE 설치.
2. TANK와 HWL 이하로 연결되는 모든 배관은 BLOCK 밸브 설치할 것.
3. 2m 이상 높은 곳에 설치된 밸브는 CHAIN VALVE 또는 PLATFORM 구성할 것.
4. MANHOLE : 2개 이상 설치한다.
   MANHOLE COVER : FRP
5. 운전 시 CLOSE 되는 배관에는 LOTO 설치.
6. CENTRIFUGAL PUMP.
   MAT'L 표기 : CASING / IMPELLER
7. AGITATOR MAT'L 표기 : SHAFT/BLADE
8. TANK 내 유입시, 확인 확인이 가능하고, 비산이 되지 않도록 최소 깊이로 반영 할 것.
   (SLAB 으로부터 100mm 떨어질 것)
9. 내부 FRP LINING TANK의 SLEEVE는 SUS304 + FRP LINING 적용.
10. 위어 것수등의 상세사항은 추후 VENDOR에서 결정한다.
11. INSTRUMENT VENDOR 선정 후 CONTROL SCHEME 및 CONTROL VALVE INLET/OUTLET NOZZLE SIZE 확정 할 것.
12. FLUSHING 용 WATER / AIR 배관은 45도 사선으로 연결할 것.

13. SLUDGE REMOVAL PUMP 토출 배관은 PUMP SUCTION 측의 TANK 수위보다 HIGH POINT 형성.
14. DELETED.
15. DELETED.
16. DELETED.
17. DELETED.
18. DELETED.
19. 아래한 청소 및 유지관리시설을 PACKAGE VENDOR 공급범위에 포함할 것.
20. SLUDGE PUMP는 TIMER에 의해 운전됨.
21. DELETED.

REV.	설 명 DESCRIPTION	날 짜 DATE
1A	REVISED AFC	25.08.14
1	REVISED AFC	25.01.17
0	APPROVAL FOR CONSTRUCTION	24.09.30

제 도 DRAWN BY	이 인 학
검 토 CHECKED BY	한 진 희
승 인 APPROVED BY	박 동 영
제 작 사	SK 에코플랜트
공 사 명 PROJECT TITLE	M15X Ph4 WWT Project
도면명 DWG. TITLE	PIPING & INSTRUMENT AIAGRAM CIF 2'nd COAGULATION & SETTLING TANK A (1/2)
축 척 SCALE	NONE
날 짜 DATE	2025. 08. 14
PROJECT NO.	22330D
REV.	1A
도면번호 SHEET NO.	CJ-M15W14-PR-A20-000108

C:WUsersWTOPWDesktopWP&ID251013WM15X Ph-4 for 인허가ICAD FILE_090WCJ-M15W14-PR-A20-000108 R1 P&ID FOR CIF 2'

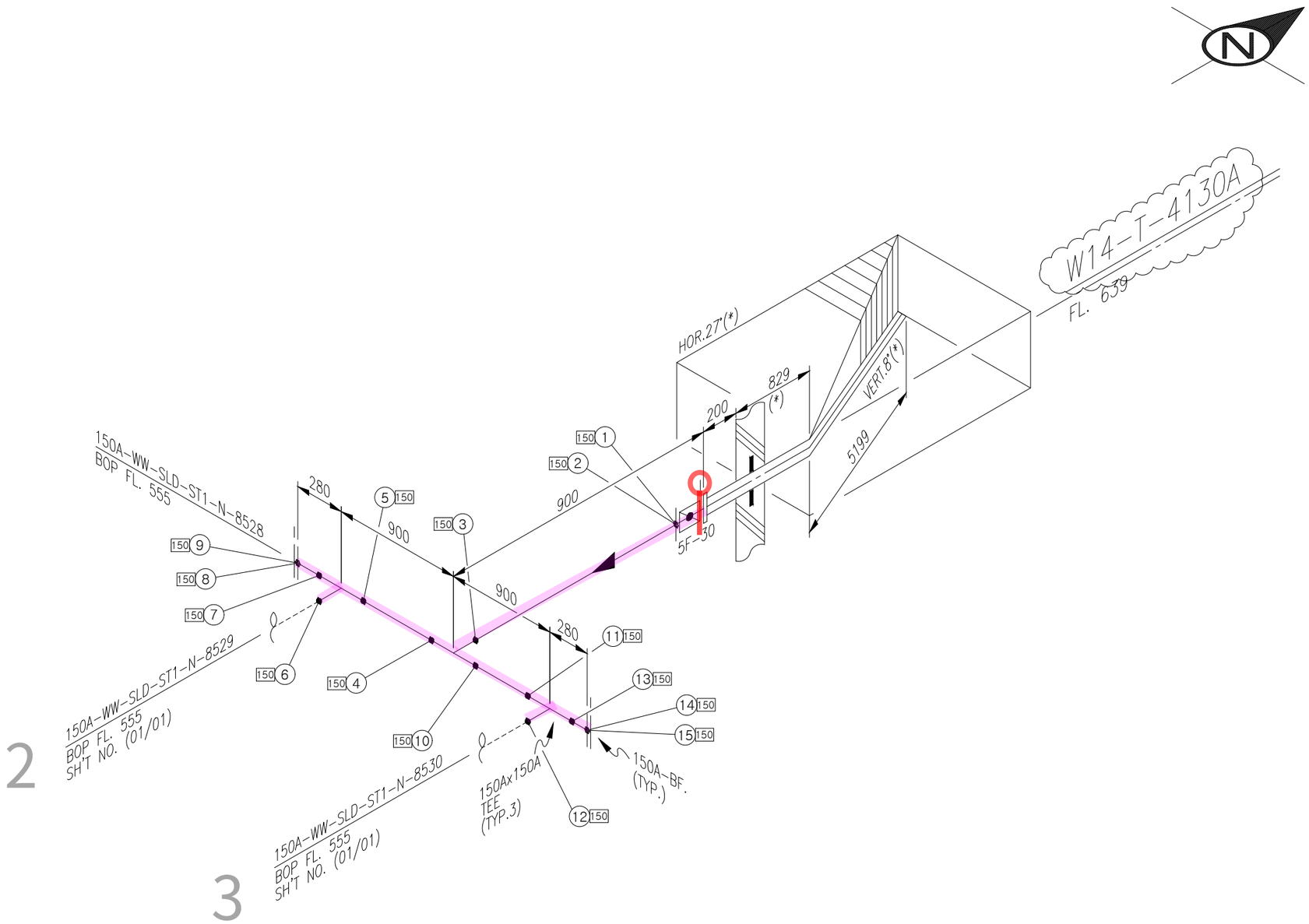

ITEM	SIZE	Q'TY	DESCRIPTION
		ST1	
P	150A	3.3M	PIPE, STS 304TP, ERW, BE – SCH 10S
T	150A	3EA	TEE EQUAL, STS304, ERW, BE – SCH 10S
VF	150A	1EA	BUTTERFLY VALVE, KS 10K, WAFER RF, BODY–GCD450 /
			TRIM–STS304 / EPDM–LINED, LEVER
F	150A	3EA	FLG SO, KS 10K, RF, STS304
FB	150A	2EA	FLG BLIND, KS 10K, RF, STS304
G	150A	3EA	GASKET, KS 10K, RF, PTFE+EPDM, 3.0MM TH'K
G1	150A	1EA	GASKET, KS 10K, FF, PTFE+EPDM, 3.0MM TH'K
B	150A	2SET	MACHINE BOLT & NUTS :STS 304 / W WASHERS
BL	150A	1SET	MACHINE BOLT & NUTS :STS 304 / W WASHERS(SPECIAL)

<NOTE>
1. (*) FIELD ADJUST

* PIPE : P/P1 * 90° ELBOW : E90 * 45° ELBOW : E45 * TEE : T * RED.TEE : TR * STUB-IN : STU * REINFORCING PAD : RP * CON.RED : RC * ECC.RED : RE * CON.SWAGE : RCS/RCS1 * ECC.SWAGE : RES/RES1 * NIPPLE : NP/NP1/NP2 * CAP : CAP/CAP1 * PLUG : PLG * FULL COUPLING : FC * HALF COUPLING : HF/HF1
* STUB-IN : STU * SOCKET(HDPE/PVC) : SC * SADDLE(HDPE) : SD * FLANGE : F/F1 * GASKET : G/G1/G2 * BOLT & NUT : B/B1 * BLIND FLANGE : FB/FB1 * GATE VA. : VG/VG1/VG2 * BALL VA. : VB/VBLO/VB1/VB1LO/VB2/VB2LO * BUTTERFLY VA. : VF/VF4 * CHECK VA. : VC/VC1/VC2/VC3/VC4/VC5/VC6/VC7
* GLOBE VA. : VL/VL1/VL2 * DIAPHRAGM VA. : VD/VDLO * DAMPER : VP * QUICK COUPLING : SQC * FLEXIBLE JOINT(STEEL) : FLXB * FLEXIBLE JOINT(RUBBER) : FLXR * FLEXIBLE JOINT(STEEL_PTFE LINED) : FLXL * FLEXIBLE HOSE : FLXH * STEAM TRAP : ST * SPRAY NOZZLE : SPN * EMERGENCY SHOWER : SSH
* STRAINER(Y-TYPE) : YSTR * STRAINER(T-TYPE) : TSTR * STRAINER(BUCKET-TYPE) : BSTR * ANCHOR PLATE : STOP * BIRD SCREEN : BS * ISOLATION KIT : IK * UNLOADING BOX : UB * AIR TRAP : AT * LOTO : LOTO * SIGHT GLASS : SG * PRESSURE GAUGE : PG * SHILED : SH * SPECIAL BOLT & NUT : BL/BL1

CLIENT SK hynix

1

INSULATION	CODE	N	CONDITION	PRESS. (kg/cm2g)	TEMP. (°C)
	THICK.	–	DESIGN	10	60
			OPERATING	ATM	AMB

AREA W14
UNIT 5FA
REF. PLAN DWG. CJ-M15W14-PI-A30-050004-A
REF. P & ID CJ-M15W14-PR-A20-000108

REV. NO.	DATE	DESCRIPTION	BY	CHK	APP'D
0	25.01.24	APPROVED FOR CONSTRUCTION	황래종	안남후	박동영

CONTRACTOR SK ecoplant
PROJECT NAME M15X Ph4 Project
COMMODITY WW-SLD
JOB NO. 22330D
LINE NO. 150A-WW-SLD-ST1-N-8528
SH'T NO. 01 / 01
REV. 0

경고 : 본 도면은 SK HYNIX의 기업비밀 자료로서, 어떠한 경우에도 목적 외 사용, 복제, 제3자에게 공개, 누설 및 유출할 수 없으며, 회사는 유포자의 불법 사용으로 피해가 발생할 경우 유포자에게 민/형사상 책임을 요구할 수 있음.

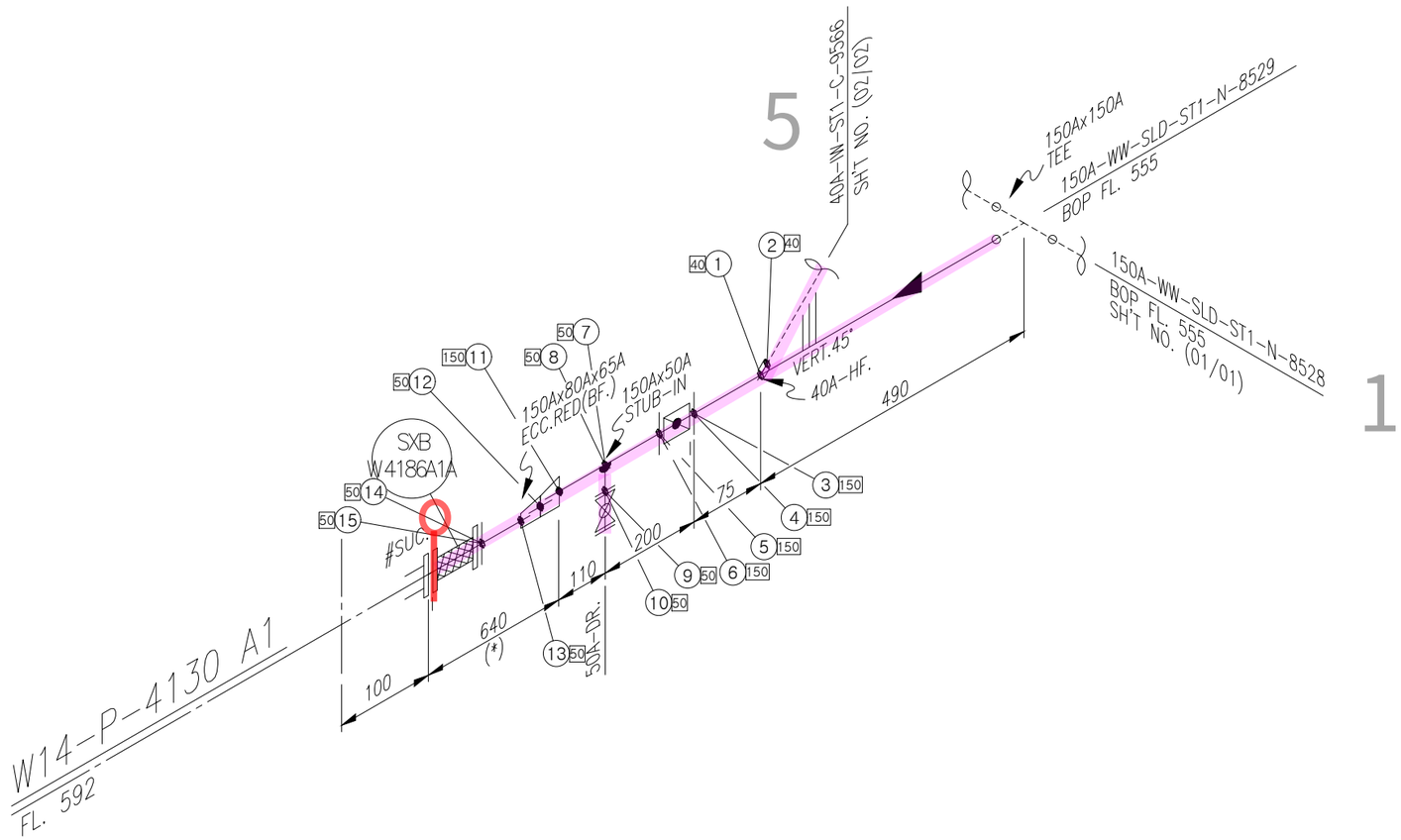

<NOTE>
1. (*) FIELD ADJUST

ITEM	SIZE	Q'TY	DESCRIPTION
		ST1	
P	150A	0.9M	PIPE, STS 304TP, ERW, BE – SCH 10S
P	65A	0.2M	PIPE, STS 304TP, ERW, BE – SCH 10S
P	50A	0.6M	PIPE, STS 304TP, ERW, BE – SCH 10S
RE	150Ax80A	1EA	REDUCER ECC, STS304, ERW, BE – SCH 10S
RE	80Ax65A	1EA	REDUCER ECC, STS304, ERW, BE – SCH 10S
STU	150Ax50A	1EA	STUB-IN BRANCH
VB	50A	1EA	BALL VALVE, KS 10K, RF FLG'D, BODY-SSC13 /
			TRIM-STS304 / SEAT-PTFE, FB, LEVER
VF	150A	1EA	BUTTERFLY VALVE, KS 10K, WAFER RF, BODY-GCD450 /
			TRIM-STS304 / EPDM-LINED, LEVER
F	150A	2EA	FLG SO, KS 10K, RF, STS304
F	65A	1EA	FLG SO, KS 10K, RF, STS304
F	50A	1EA	FLG SO, KS 10K, RF, STS304
FB	50A	1EA	FLG BLIND, KS 10K, RF, STS304
G	150A	2EA	GASKET, KS 10K, RF, PTFE+EPDM, 3.0MM TH'K
G	65A	2EA	GASKET, KS 10K, RF, PTFE+EPDM, 3.0MM TH'K
G	50A	2EA	GASKET, KS 10K, RF, PTFE+EPDM, 3.0MM TH'K
B	65A	2SET	MACHINE BOLT & NUTS :STS 304 / W WASHERS
B	50A	2SET	MACHINE BOLT & NUTS :STS 304 / W WASHERS
BL	150A	1SET	MACHINE BOLT & NUTS :STS 304 / W WASHERS(SPECIAL)
FLXB	65A	1EA	FLEXIBLE JOINT(TPC STEEL TYPE)
HF	40A	1EA	COUPLING HALF, STSF304, SW – SCH 10S

* PIPE : P/P1 * 90° ELBOW : E90 * 45° ELBOW : E45 * TEE : T * RED.TEE : TR * STUB-IN : STU * REINFORCING PAD : RP * CON.RED : RC * ECC.RED : RE * CON.SWAGE : RCS/RCS1 * ECC.SWAGE : RES/RES1 * NIPPLE : NP/NP1/NP2 * CAP : CAP/CAP1 * PLUG : PLG * FULL COUPLING : FC * HALF COUPLING : HF/HF1
* STUB-IN : STU * SOCKET(HDPE/PVC) : SC * SADDLE(HDPE) : SD * FLANGE : F/F1 * GASKET : G/G1/G2 * BOLT & NUT : B/B1 * BLIND FLANGE : FB/FB1 * GATE VA. : VG/VG1/VG2 * BALL VA. : VB/VBLO/VB1/VB1LO/VB2/VB2LO * BUTTERFLY VA. : VF/VF4 * CHECK VA. : VC/VC1/VC2/VC3/VC4/VC5/VC6/VC7
* GLOBE VA. : VL/VL1/VL2 * DIAPHRAGM VA. : VD/VDLO * DAMPER : VP * QUICK COUPLING : SQC * FLEXIBLE JOINT(STEEL) : FLXB * FLEXIBLE JOINT(RUBBER) : FLXR * FLEXIBLE JOINT(STEEL_PTFE LINED) : FLXL * FLEXIBLE HOSE : FLXH * STEAM TRAP : ST * SPRAY NOZZLE : SPN * EMERGENCY SHOWER : SSH
* STRAINER(Y-TYPE) : YSTR * STRAINER(T-TYPE) : TSTR * STRAINER(BUCKET-TYPE) : BSTR * ANCHOR PLATE : STOP * BIRD SCREEN : BS * ISOLATION KIT : IK * UNLOADING BOX : UB * AIR TRAP : AT * LOTO : LOTO * SIGHT GLASS : SG * PRESSURE GAUGE : PG * SHILED : SH * SPECIAL BOLT & NUT : BL/BL1

CLIENT SK hynix 2

INSULATION	CODE	N	CONDITION	PRESS. (kg/cm2g)	TEMP. (°C)
	THICK.	–	DESIGN	10	60
			OPERATING	ATM	AMB

AREA W14
UNIT 5FA
REF. PLAN DWG. CJ-M15W14-PI-A30-050004-A
REF. P & ID CJ-M15W14-PR-A20-000108

REV. NO.	DATE	DESCRIPTION	BY	CHK	APP'D
0	25.01.24	APPROVED FOR CONSTRUCTION	황래종	안남후	박동영

CONTRACTOR SK ecoplant
PROJECT NAME M15X Ph4 Project
COMMODITY WW-SLD
JOB NO. 22330D
LINE NO. 150A-WW-SLD-ST1-N-8529
SH'T NO. 01 / 01
REV. 0

경고 : 본 도면은 SK HYNIX의 기업비밀 자료로서, 어떠한 경우에도 목적 외 사용, 복제, 제3자에게 공개, 누설 및 유출할 수 없으며, 회사는 유포자의 불법 사용으로 피해가 발생할 경우 유포자에게 민/형사상 책임을 요구할 수 있음.

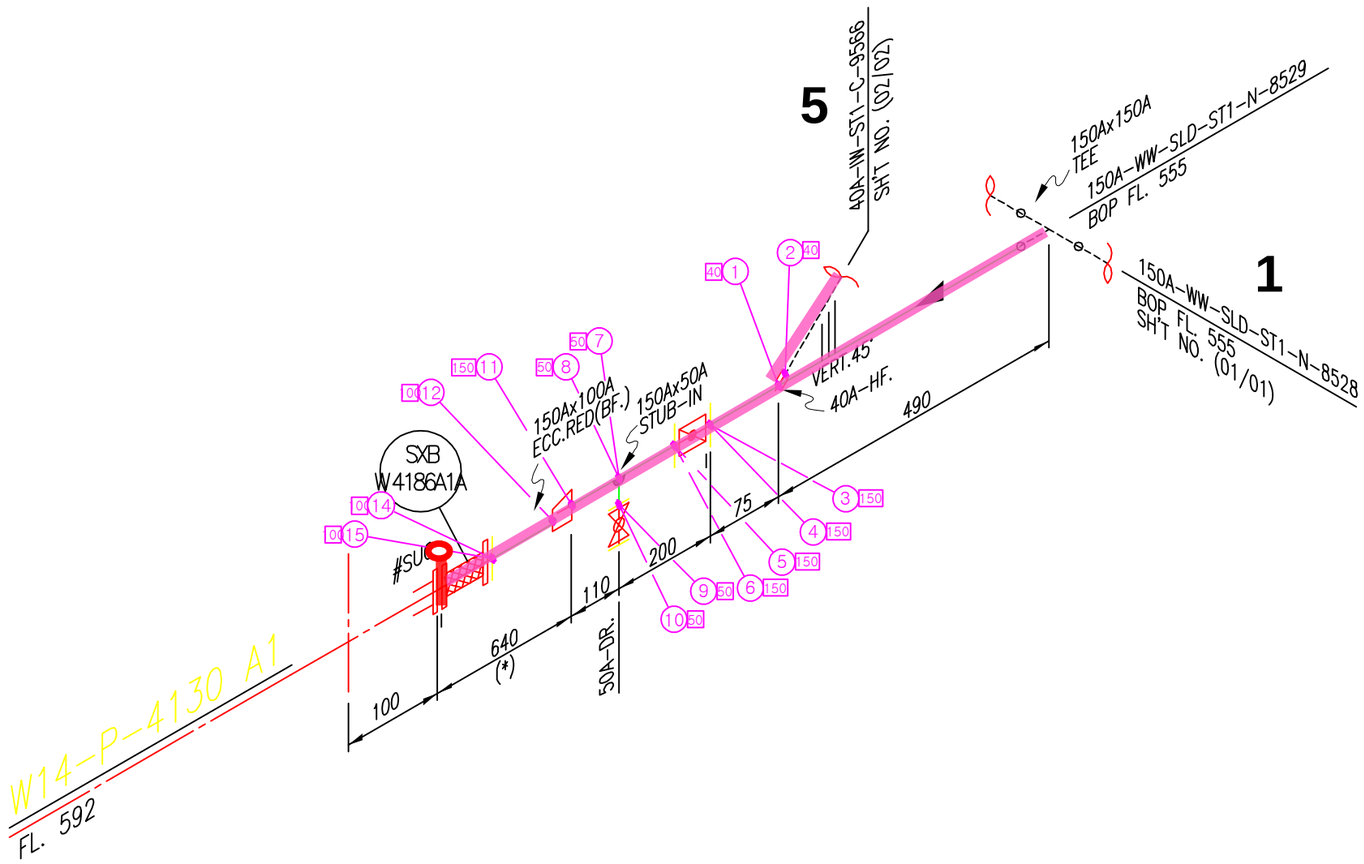

<NOTE>
1. (*) FIELD ADJUST

ITEM	SIZE	Q'TY	DESCRIPTION
		ST1	
P	150A	0.9M	PIPE, STS 304TP, ERW, BE – SCH 10S
P	100A	0.2M	PIPE, STS 304TP, ERW, BE – SCH 10S
P	50A	0.6M	PIPE, STS 304TP, ERW, BE – SCH 10S
RE	150Ax100A	1EA	REDUCER ECC, STS304, ERW, BE – SCH 10S
STU	150Ax50A	1EA	STUB-IN BRANCH
VB	50A	1EA	BALL VALVE, KS 10K, RF FLG'D, BODY-SSC13 /
			TRIM-STS304 / SEAT-PTFE, FB, LEVER
VF	150A	1EA	BUTTERFLY VALVE, KS 10K, WAFER RF, BODY-GCD450 /
			TRIM-STS304 / EPDM-LINED, LEVER
F	150A	2EA	FLG SO, KS 10K, RF, STS304
F	100A	1EA	FLG SO, KS 10K, RF, STS304
F	50A	1EA	FLG SO, KS 10K, RF, STS304
FB	50A	1EA	FLG BLIND, KS 10K, RF, STS304
G	150A	2EA	GASKET, KS 10K, RF, PTFE+EPDM, 3.0MM TH'K
G	100A	2EA	GASKET, KS 10K, RF, PTFE+EPDM, 3.0MM TH'K
G	50A	2EA	GASKET, KS 10K, RF, PTFE+EPDM, 3.0MM TH'K
B	100A	2SET	MACHINE BOLT & NUTS :STS 304 / W WASHERS
B	50A	2SET	MACHINE BOLT & NUTS :STS 304 / W WASHERS
BL	150A	1SET	MACHINE BOLT & NUTS :STS 304 / W WASHERS(SPECIAL)
FLXB	100A	1EA	FLEXIBLE JOINT(TPC STEEL TYPE)
HF	40A	1EA	COUPLING HALF, STSF304, SW – SCH 10S

* PIPE : P/P1 * 90° ELBOW : E90 * 45° ELBOW : E45 * TEE : T * RED.TEE : TR * STUB-IN : STU * REINFORCING PAD : RP * CON.RED : RC * ECC.RED : RE * CON.SWAGE : RCS/RCS1 * ECC.SWAGE : RES/RES1 * NIPPLE : NP/NP1/NP2 * CAP : CAP/CAP1 * PLUG : PLG * FULL COUPLING : FC * HALF COUPLING : HF/HF1
* STUB-IN : STU * SOCKET(HDPE/PVC) : SC * SADDLE(HDPE) : SD * FLANGE : F/F1 * GASKET : G/G1/G2 * BOLT & NUT : B/B1 * BLIND FLANGE : FB/FB1 * GATE VA. : VG/VG1/VG2 * BALL VA. : VB/VBL0/VB1/VB1L0/VB2/VB2L0 * BUTTERFLY VA. : VF/VF4 * CHECK VA. : VC/VC1/VC2/VC3/VC4/VC5/VC6/VC7
* GLOBE VA. : VL/VL1/VL2 * DIAPHRAGM VA. : VD/VDL0 * DAMPER : VP * QUICK COUPLING : SQC * FLEXIBLE JOINT(STEEL) : FLXB * FLEXIBLE JOINT(RUBBER) : FLXR * FLEXIBLE JOINT(STEEL_PTFE LINED) : FLXL * FLEXIBLE HOSE : FLXH * STEAM TRAP : ST * SPRAY NOZZLE : SPN * EMERGENCY SHOWER : SSH
* STRAINER(Y-TYPE) : YSTR * STRAINER(T-TYPE) : TSTR * STRAINER(BUCKET-TYPE) : BSTR * ANCHOR PLATE : STOP * BIRD SCREEN : BS * ISOLATION KIT : IK * UNLOADING BOX : UB * AIR TRAP : AT * LOTO : LOTO * SIGHT GLASS : SG * PRESSURE GAUGE : PG * SHILED : SH * SPECIAL BOLT & NUT : BL/BL1

CLIENT: SK hynix

2

INSULATION	CODE	N	CONDITION	PRESS. (kg/cm2g)	TEMP. (°C)
	THICK.	–	DESIGN	10	60
			OPERATING	ATM	AMB

AREA: W14
UNIT: 5FA
REF. PLAN DWG.: CJ-M15W14-PI-A30-050004-A
REF. P & ID: CJ-M15W14-PR-A20-000108

REV. NO.	DATE	DESCRIPTION	BY	CHK	APP'D
0	25.01.24	APPROVED FOR CONSTRUCTION	황래종	안남후	박동영

CONTRACTOR: SK ecoplant
COMMODITY: WW-SLD
LINE NO.: 150A-WW-SLD-ST1-N-8529
PROJECT NAME: M15X Ph4 Project
JOB NO.: 22330D
SH'T NO.: 01 / 01
REV.: 0

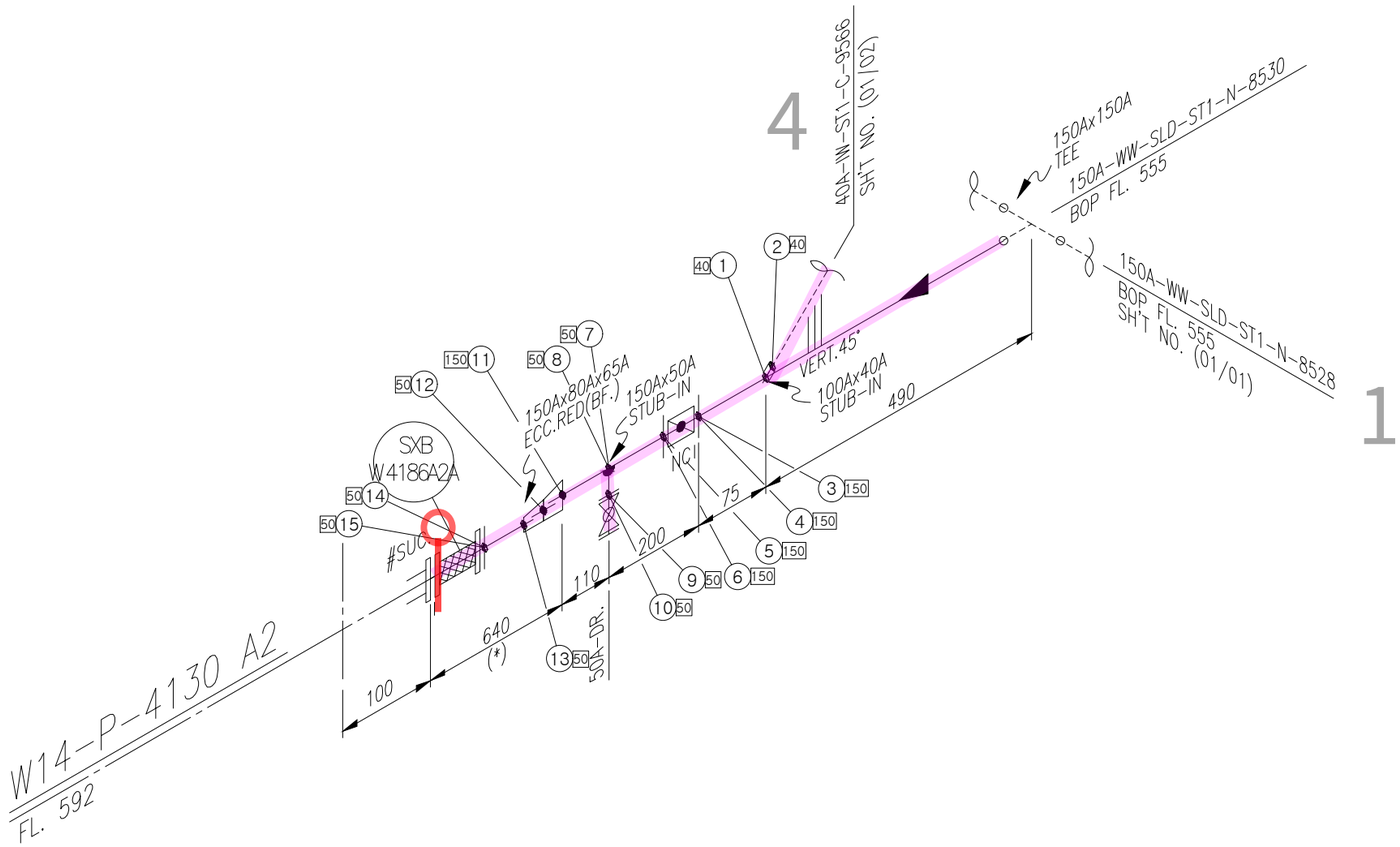

ITEM	SIZE	Q'TY	DESCRIPTION
		ST1	
P	150A	0.9M	PIPE, STS 304TP, ERW, BE – SCH 10S
P	65A	0.2M	PIPE, STS 304TP, ERW, BE – SCH 10S
P	50A	0.6M	PIPE, STS 304TP, ERW, BE – SCH 10S
RE	150Ax80A	1EA	REDUCER ECC, STS304, ERW, BE – SCH 10S
RE	80Ax65A	1EA	REDUCER ECC, STS304, ERW, BE – SCH 10S
STU	150Ax50A	1EA	STUB-IN BRANCH
VB	50A	1EA	BALL VALVE, KS 10K, RF FLG'D, BODY-SSC13 /
			TRIM-STS304 / SEAT-PTFE, FB, LEVER
VF	150A	1EA	BUTTERFLY VALVE, KS 10K, WAFER RF, BODY-GCD450 /
			TRIM-STS304 / EPDM-LINED, LEVER
F	150A	2EA	FLG SO, KS 10K, RF, STS304
F	65A	1EA	FLG SO, KS 10K, RF, STS304
F	50A	1EA	FLG SO, KS 10K, RF, STS304
FB	50A	1EA	FLG BLIND, KS 10K, RF, STS304
G	150A	2EA	GASKET, KS 10K, RF, PTFE+EPDM, 3.0MM TH'K
G	65A	2EA	GASKET, KS 10K, RF, PTFE+EPDM, 3.0MM TH'K
G	50A	2EA	GASKET, KS 10K, RF, PTFE+EPDM, 3.0MM TH'K
B	65A	2SET	MACHINE BOLT & NUTS :STS 304 / W WASHERS
B	50A	2SET	MACHINE BOLT & NUTS :STS 304 / W WASHERS
BL	150A	1SET	MACHINE BOLT & NUTS :STS 304 / W WASHERS(SPECIAL)
FLXB	65A	1EA	FLEXIBLE JOINT(TPC STEEL TYPE)
HF	40A	1EA	COUPLING HALF, STSF304, SW – SCH 10S
LOTO	150A	1EA	LOTO

<NOTE>
1. (*) FIELD ADJUST

* PIPE : P/P1 * 90° ELBOW : E90 * 45° ELBOW : E45 * TEE : T * RED.TEE : TR * STUB-IN : STU * REINFORCING PAD : RP * CON.RED : RC * ECC.RED : RE * CON.SWAGE : RCS/RCS1 * ECC.SWAGE : RES/RES1 * NIPPLE : NP/NP1/NP2 * CAP : CAP/CAP1 * PLUG : PLG * FULL COUPLING : FC * HALF COUPLING : HF/HF1
* STUB-IN : STU * SOCKET(HDPE/PVC) : SC * SADDLE(HDPE) : SD * FLANGE : F/F1 * GASKET : G/G1/G2 * BOLT & NUT : B/B1 * BLIND FLANGE : FB/FB1 * GATE VA. : VG/VG1/VG2 * BALL VA. : VB/VBLO/VB1/VB1LO/VB2/VB2LO * BUTTERFLY VA. : VF/VF4 * CHECK VA. : VC/VC1/VC2/VC3/VC4/VC5/VC6/VC7
* GLOBE VA. : VL/VL1/VL2 * DIAPHRAGM VA. : VD/VDLO * DAMPER : VP * QUICK COUPLING : SQC * FLEXIBLE JOINT(STEEL) : FLXB * FLEXIBLE JOINT(RUBBER) : FLXR * FLEXIBLE JOINT(STEEL_PTFE LINED) : FLXL * FLEXIBLE HOSE : FLXH * STEAM TRAP : ST * SPRAY NOZZLE : SPN * EMERGENCY SHOWER : SSH
* STRAINER(Y-TYPE) : YSTR * STRAINER(T-TYPE) : TSTR * STRAINER(BUCKET-TYPE) : BSTR * ANCHOR PLATE : STOP * BIRD SCREEN : BS * ISOLATION KIT : IK * UNLOADING BOX : UB * AIR TRAP : AT * LOTO : LOTO * SIGHT GLASS : SG * PRESSURE GAUGE : PG * SHILED : SH * SPECIAL BOLT & NUT : BL/BL1

INSULATION	CODE	N	CONDITION	PRESS. (kg/cm2g)	TEMP. (°C)
	THICK.	–	DESIGN	10	60
			OPERATING	ATM	AMB

AREA W14
UNIT 5FA
REF. PLAN DWG. CJ-M15W14-PI-A30-050004-A
REF. P & ID CJ-M15W14-PR-A20-000108

REV. NO.	DATE	DESCRIPTION	BY	CHK	APP'D
0	25.01.24	APPROVED FOR CONSTRUCTION	황래종	안남후	박동영

CLIENT SK hynix

3

CONTRACTOR SK ecoplant

PROJECT NAME M15X Ph4 Project

COMMODITY WW-SLD

JOB NO. 22330D

LINE NO. 150A-WW-SLD-ST1-N-8530

SH'T NO. 01 / 01

REV. 0

경고 : 본 도면은 SK HYNIX의 기업비밀 자료로서, 어떠한 경우에도 목적 외 사용, 복제, 제3자에게 공개, 누설 및 유출할 수 없으며, 회사는 유포자의 불법 사용으로 피해가 발생할 경우 유포자에게 민/형사상 책임을 요구할 수 있음.

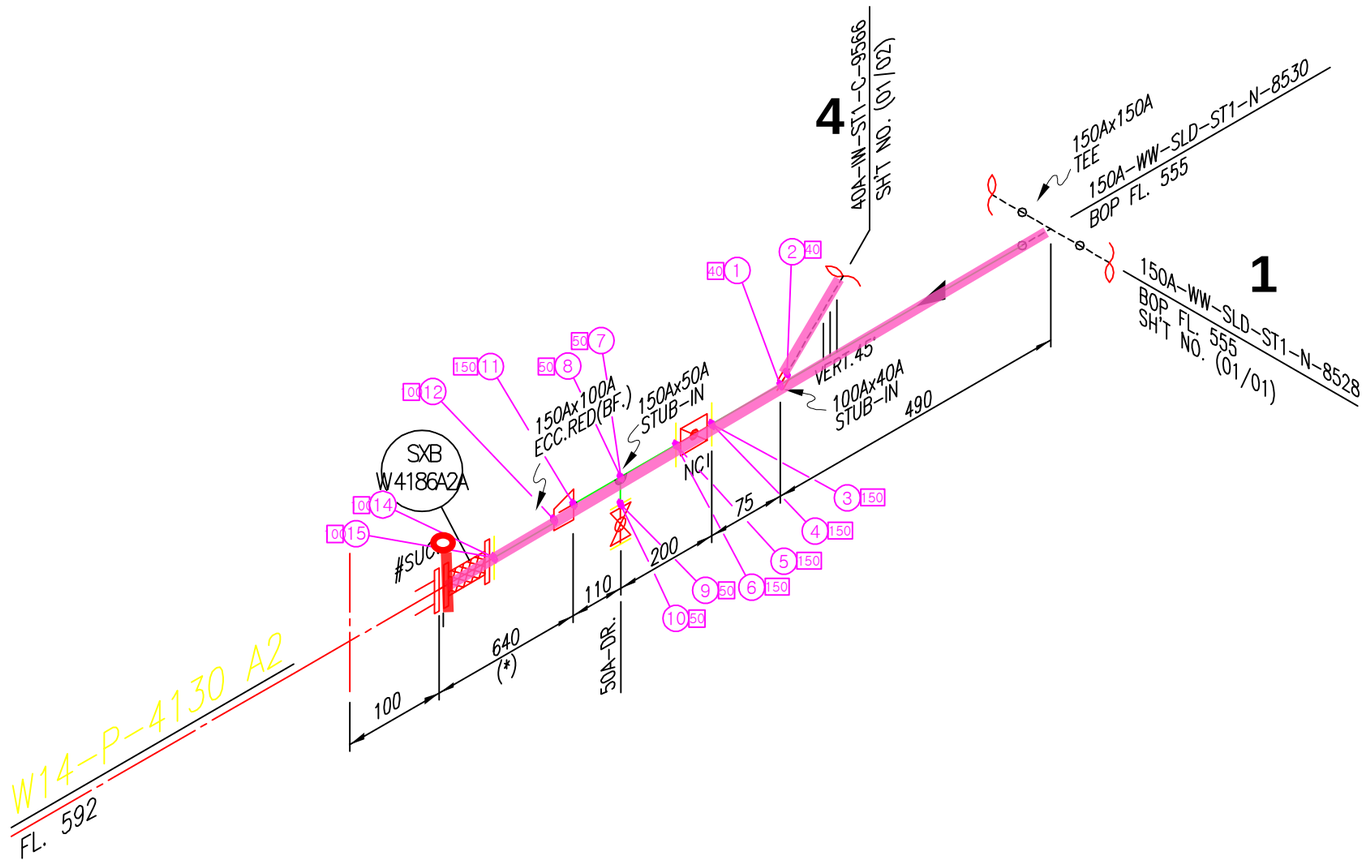

<NOTE>
1. (*) FIELD ADJUST

ITEM	SIZE	Q'TY	DESCRIPTION
		ST1	
P	150A	0.9M	PIPE, STS 304TP, ERW, BE – SCH 10S
P	100A	0.2M	PIPE, STS 304TP, ERW, BE – SCH 10S
P	50A	0.6M	PIPE, STS 304TP, ERW, BE – SCH 10S
RE	150Ax100A	1EA	REDUCER ECC, STS304, ERW, BE – SCH 10S
STU	150Ax50A	1EA	STUB-IN BRANCH
VB	50A	1EA	BALL VALVE, KS 10K, RF FLG'D, BODY-SSC13 /
			TRIM-STS304 / SEAT-PTFE, FB, LEVER
VF	150A	1EA	BUTTERFLY VALVE, KS 10K, WAFER RF, BODY-GCD450 /
			TRIM-STS304 / EPDM-LINED, LEVER
F	150A	2EA	FLG SO, KS 10K, RF, STS304
F	100A	1EA	FLG SO, KS 10K, RF, STS304
F	50A	1EA	FLG SO, KS 10K, RF, STS304
FB	50A	1EA	FLG BLIND, KS 10K, RF, STS304
G	150A	2EA	GASKET, KS 10K, RF, PTFE+EPDM, 3.0MM TH'K
G	100A	2EA	GASKET, KS 10K, RF, PTFE+EPDM, 3.0MM TH'K
G	50A	2EA	GASKET, KS 10K, RF, PTFE+EPDM, 3.0MM TH'K
B	100A	2SET	MACHINE BOLT & NUTS :STS 304 / W WASHERS
B	50A	2SET	MACHINE BOLT & NUTS :STS 304 / W WASHERS
BL	150A	1SET	MACHINE BOLT & NUTS :STS 304 / W WASHERS(SPECIAL)
FLXB	100A	1EA	FLEXIBLE JOINT(TPC STEEL TYPE)
HF	40A	1EA	COUPLING HALF, STSF304, SW – SCH 10S
LOTO	150A	1EA	LOTO

* PIPE : P/P1 * 90° ELBOW : E90 * 45° ELBOW : E45 * TEE : T * RED.TEE : TR * STUB-IN : STU * REINFORCING PAD : RP * CON.RED : RC * ECC.RED : RE * CON.SWAGE : RCS/RCS1 * ECC.SWAGE : RES/RES1 * NIPPLE : NP/NP1/NP2 * CAP : CAP/CAP1 * PLUG : PLG * FULL COUPLING : FC * HALF COUPLING : HF/HF1
* STUB-IN : STU * SOCKET(HDPE/PVC) : SC * SADDLE(HDPE) : SD * FLANGE : F/F1 * GASKET : G/G1/G2 * BOLT & NUT : B/B1 * BLIND FLANGE : FB/FB1 * GATE VA. : VG/VG1/VG2 * BALL VA. : VB/VBLO/VB1/VB1LO/VB2/VB2LO * BUTTERFLY VA. : VF/VF4 * CHECK VA. : VC/VC1/VC2/VC3/VC4/VC5/VC6/VC7
* GLOBE VA. : VL/VL1/VL2 * DIAPHRAGM VA. : VD/VDLO * DAMPER : VP * QUICK COUPLING : SQC * FLEXIBLE JOINT(STEEL) : FLXB * FLEXIBLE JOINT(RUBBER) : FLXR * FLEXIBLE JOINT(STEEL_PTFE LINED) : FLXL * FLEXIBLE HOSE : FLXH * STEAM TRAP : ST * SPRAY NOZZLE : SPN * EMERGENCY SHOWER : SSH
* STRAINER(Y-TYPE) : YSTR * STRAINER(T-TYPE) : TSTR * STRAINER(BUCKET-TYPE) : BSTR * ANCHOR PLATE : STOP * BIRD SCREEN : BS * ISOLATION KIT : IK * UNLOADING BOX : UB * AIR TRAP : AT * LOTO : LOTO * SIGHT GLASS : SG * PRESSURE GAUGE : PG * SHILED : SH * SPECIAL BOLT & NUT : BL/BL1

CLIENT: SK hynix

3

INSULATION	CODE	N	CONDITION	PRESS. (kg/cm2g)	TEMP. (°C)	AREA	W14
	THICK.	–	DESIGN	10	60	UNIT	5FA
			OPERATING	ATM	AMB	REF. PLAN DWG.	CJ-M15W14-PI-A30-050004-A
						REF. P & ID	CJ-M15W14-PR-A20-000108

REV. NO.	DATE	DESCRIPTION	BY	CHK	APP'D
0	25.01.24	APPROVED FOR CONSTRUCTION	황래종	안남후	박동영

CONTRACTOR: SK ecoplant
COMMODITY: WW-SLD
LINE NO.: 150A-WW-SLD-ST1-N-8530
PROJECT NAME: M15X Ph4 Project
JOB NO.: 22330D
SH'T NO.: 01 / 01
REV.: 0

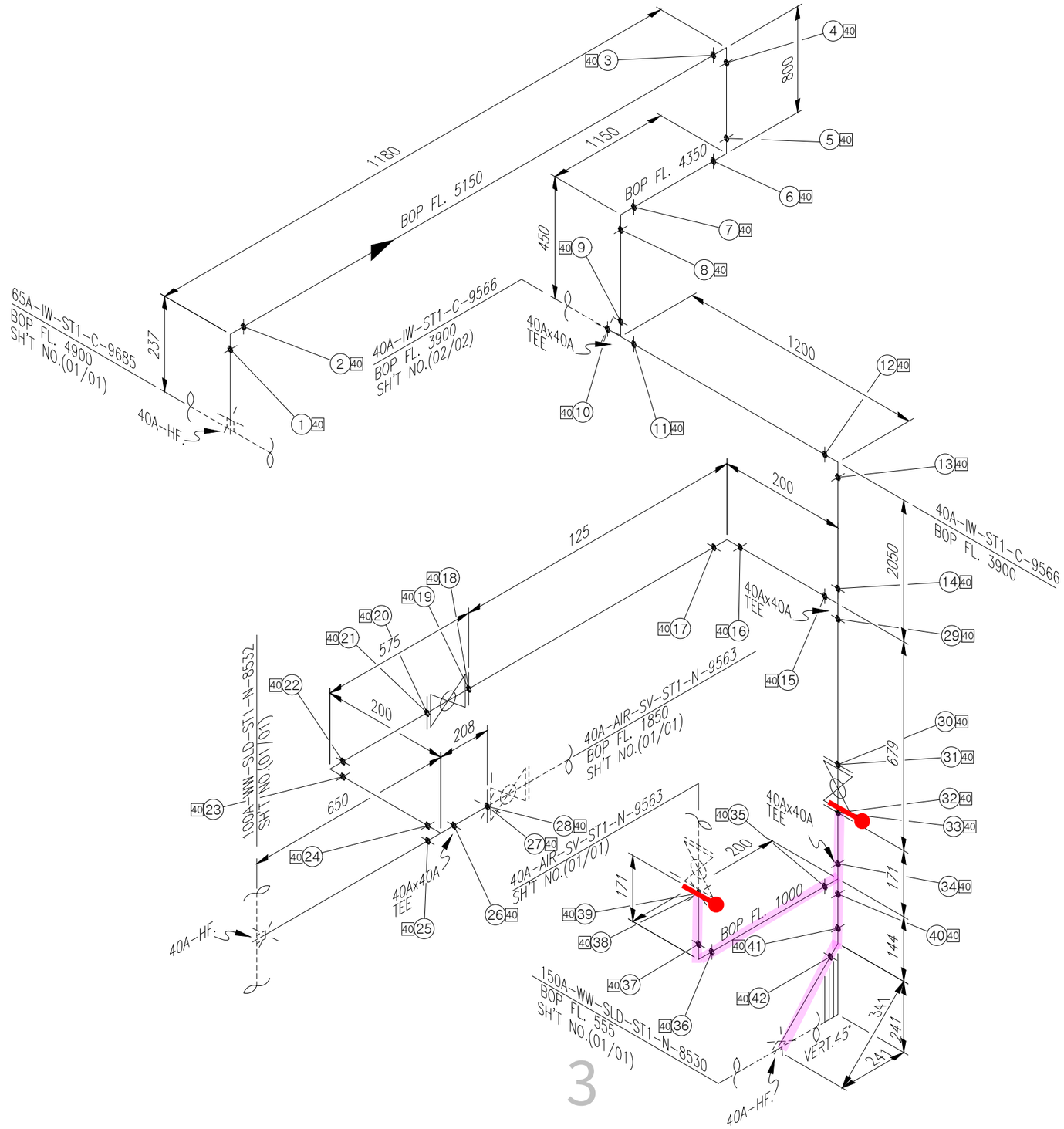

<NOTE>
1. (*) FIELD ADJUST

ITEM	SIZE	Q'TY	DESCRIPTION
		ST1	
P	40A	10.2M	PIPE, STS 304TP, ERW, PE - SCH 10S
E90	40A	8EA	ELBOW 90 DEG, STSF304, SW - SCH 10S
E45	40A	1EA	ELBOW 45 DEG, STSF304, SW - SCH 10S
T	40A	4EA	TEE EQUAL, STSF304, SW - SCH 10S
VB	40A	2EA	BALL VALVE, KS 10K, RF FLG'D, BODY-STSF304 /
			TRIM-STS304 / SEAT-PTFE, FB, LEVER
F	40A	6EA	FLG SO, KS 10K, RF, STS304
G	40A	4EA	GASKET, KS 10K, RF, PTFE+EPDM, 3.0MM TH'K
B	40A	4SET	MACHINE BOLT & NUTS :STS 304 / W WASHERS
IN	25tX40A	10.2M	관 보온재(고무발포)

* PIPE : P/P1 * 90° ELBOW : E90 * 45° ELBOW : E45 * TEE : T * RED.TEE : TR * STUB-IN : STU * REINFORCING PAD : RP * CON.RED : RC * ECC.RED : RE * CON.SWAGE : RCS/RCS1 * ECC.SWAGE : RES/RES1 * NIPPLE : NP/NP1/NP2 * CAP : CAP/CAP1 * PLUG : PLG * FULL COUPLING : FC * HALF COUPLING : HF/HF1
* STUB-IN : STU * SOCKET(HDPE/PVC) : SC * SADDLE(HDPE) : SD * FLANGE : F/F1 * GASKET : G/G1/G2 * BOLT & NUT : B/B1 * BLIND FLANGE : FB/FB1 * GATE VA. : VG/VG1/VG2 * BALL VA. : VB/VBL0/VB1/VB1L0/VB2/VB2L0 * BUTTERFLY VA. : VF/VF4 * CHECK VA. : VC/VC1/VC2/VC3/VC4/VC5/VC6/VC7
* GLOBE VA. : VL/VL1/VL2 * DIAPHRAGM VA. : VD/VDL0 * DAMPER : VP * QUICK COUPLING : SQC * FLEXIBLE JOINT(STEEL) : FLXB * FLEXIBLE JOINT(RUBBER) : FLXR * FLEXIBLE JOINT(STEEL_PTFE LINED) : FLXL * FLEXIBLE HOSE : FLXH * STEAM TRAP : ST * SPRAY NOZZLE : SPN * EMERGENCY SHOWER : SSH
* STRAINER(Y-TYPE) : YSTR * STRAINER(T-TYPE) : TSTR * STRAINER(BUCKET-TYPE) : BSTR * ANCHOR PLATE : STOP * BIRD SCREEN : BS * ISOLATION KIT : IK * UNLOADING BOX : UB * AIR TRAP : AT * LOTO : LOTO * SIGHT GLASS : SG * PRESSURE GAUGE : PG * SHILED : SH * SPECIAL BOLT & NUT : BL/BL1

CLIENT SK hynix

4

INSULATION	CODE	C	CONDITION	PRESS. (kg/cm2g)	TEMP. (°C)
	THICK.	25	DESIGN	13.5	60
			OPERATING	10	AMB

AREA W14
UNIT 5FA
REF. PLAN DWG. CJ-M15W14-PI-A30-050004-D
REF. P & ID CJ-M15W14-PR-A20-000108

REV. NO.	DATE	DESCRIPTION	BY	CHK	APP'D
0	25.01.24	APPROVED FOR CONSTRUCTION	황래종	안남후	박동영

CONTRACTOR SK ecoplant
PROJECT NAME M15X Ph4 Project
COMMODITY IW
JOB NO. 22330D
LINE NO. 40A-IW-ST1-C-9566
SH'T NO. 01 / 02
REV. 0

경고 : 본 도면은 SK HYNIX의 기업비밀 자료로서, 어떠한 경우에도 목적 외 사용, 복제, 제3자에게 공개, 누설 및 유출할 수 없으며, 회사는 유포자의 불법 사용으로 피해가 발생할 경우 유포자에게 민/형사상 책임을 요구할 수 있음.

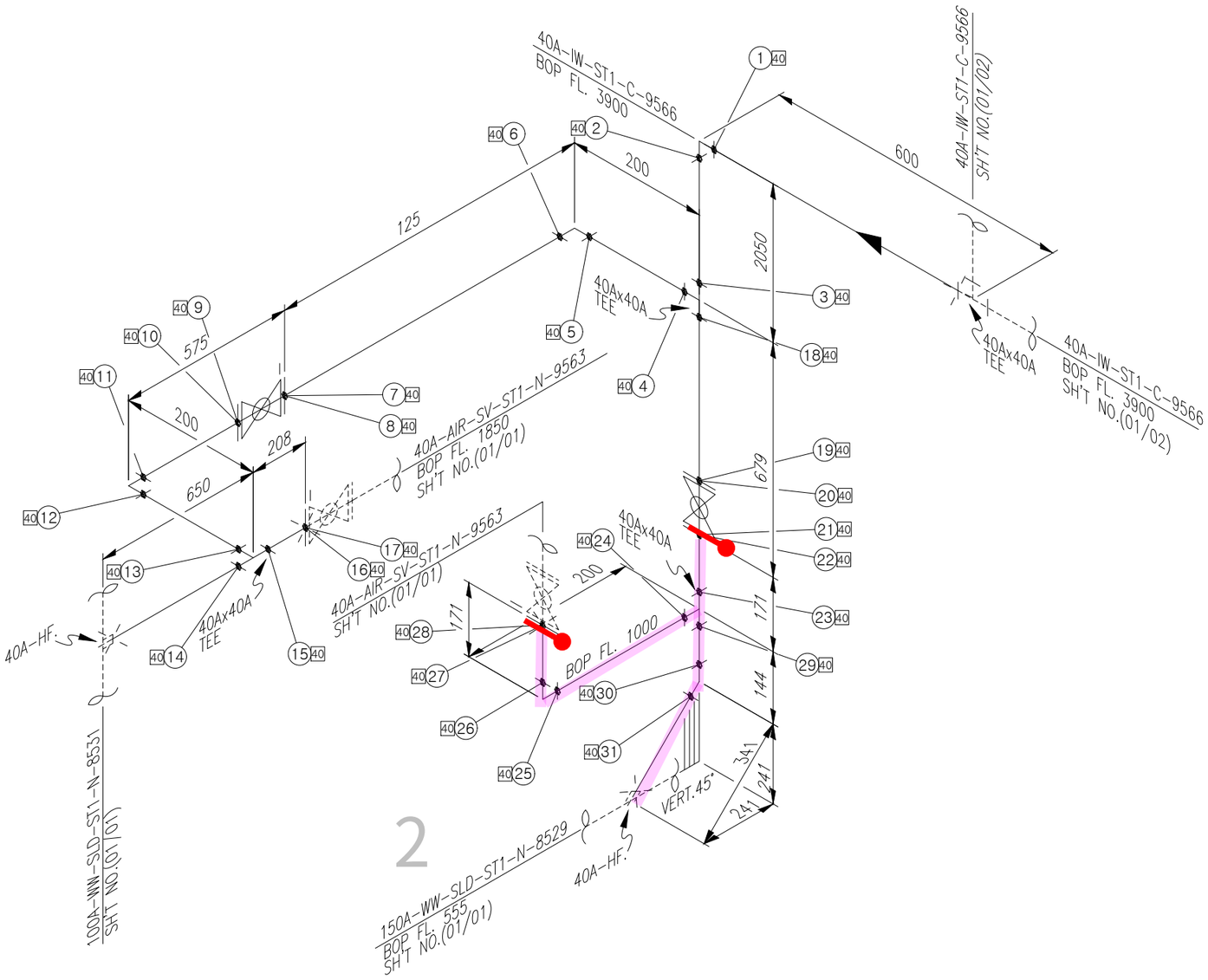

ITEM	SIZE	Q'TY	DESCRIPTION
		ST1	
P	40A	7.0M	PIPE, STS 304TP, ERW, PE – SCH 10S
E90	40A	4EA	ELBOW 90 DEG, STSF304, SW – SCH 10S
E45	40A	1EA	ELBOW 45 DEG, STSF304, SW – SCH 10S
T	40A	3EA	TEE EQUAL, STSF304, SW – SCH 10S
VB	40A	2EA	BALL VALVE, KS 10K, RF FLG'D, BODY–STSF304 /
			TRIM–STS304 / SEAT–PTFE, FB, LEVER
F	40A	6EA	FLG SO, KS 10K, RF, STS304
G	40A	4EA	GASKET, KS 10K, RF, PTFE+EPDM, 3.0MM TH'K
B	40A	4SET	MACHINE BOLT & NUTS :STS 304 / W WASHERS
IN	25tX40A	7.0M	관 보온재(고무발포)

<NOTE>
1. (*) FIELD ADJUST

* PIPE : P/P1 * 90° ELBOW : E90 * 45° ELBOW : E45 * TEE : T * RED.TEE : TR * STUB-IN : STU * REINFORCING PAD : RP * CON.RED : RC * ECC.RED : RE * CON.SWAGE : RCS/RCS1 * ECC.SWAGE : RES/RES1 * NIPPLE : NP/NP1/NP2 * CAP : CAP/CAP1 * PLUG : PLG * FULL COUPLING : FC * HALF COUPLING : HF/HF1
* STUB-IN : STU * SOCKET(HDPE/PVC) : SC * SADDLE(HDPE) : SD * FLANGE : F/F1 * GASKET : G/G1/G2 * BOLT & NUT : B/B1 * BLIND FLANGE : FB/FB1 * GATE VA. : VG/VG1/VG2 * BALL VA. : VB/VBLO/VB1/VB1LO/VB2/VB2LO * BUTTERFLY VA. : VF/VF4 * CHECK VA. : VC/VC1/VC2/VC3/VC4/VC5/VC6/VC7
* GLOBE VA. : VL/VL1/VL2 * DIAPHRAGM VA. : VD/VDLO * DAMPER : VP * QUICK COUPLING : SQC * FLEXIBLE JOINT(STEEL) : FLXB * FLEXIBLE JOINT(RUBBER) : FLXR * FLEXIBLE JOINT(STEEL_PTFE LINED) : FLXL * FLEXIBLE HOSE : FLXH * STEAM TRAP : ST * SPRAY NOZZLE : SPN * EMERGENCY SHOWER : SSH
* STRAINER(Y-TYPE) : YSTR * STRAINER(T-TYPE) : TSTR * STRAINER(BUCKET-TYPE) : BSTR * ANCHOR PLATE : STOP * BIRD SCREEN : BS * ISOLATION KIT : IK * UNLOADING BOX : UB * AIR TRAP : AT * LOTO : LOTO * SIGHT GLASS : SG * PRESSURE GAUGE : PG * SHILED : SH * SPECIAL BOLT & NUT : BL/BL1

CLIENT SK hynix

5

INSULATION	CODE	C	CONDITION	PRESS. (kg/cm2g)	TEMP. (°C)
	THICK.	25	DESIGN	13.5	60
			OPERATING	10	AMB

AREA W14
UNIT 5FA
REF. PLAN DWG. CJ-M15W14-PI-A30-050004-D
REF. P & ID CJ-M15W14-PR-A20-000108

REV. NO.	DATE	DESCRIPTION	BY	CHK	APP'D
0	25.01.24	APPROVED FOR CONSTRUCTION	황래종	안남후	박동영

CONTRACTOR SK ecoplant
PROJECT NAME M15X Ph4 Project
COMMODITY IW
JOB NO. 22330D
LINE NO. 40A-IW-ST1-C-9566
SH'T NO. 02 / 02
REV. 0

경고 : 본 도면은 SK HYNIX의 기업비밀 자료로서, 어떠한 경우에도 목적 외 사용, 복제, 제3자에게 공개, 누설 및 유출할 수 없으며, 회사는 유포자의 불법 사용으로 피해가 발생할 경우 유포자에게 민/형사상 책임을 요구할 수 있음.