DRAWING LIST FOR TEST PACKAGE

CAOH2-551

PROJECT NO.: 22328D

PROJECT TITLE : M15X Ph2 Project

No	PKG No	UNIT	LINE NUMBER			P&ID		REMARK
			ISO DRAWING No	SHEET	REV	P&ID No	REV	
1	551	5FA	100A-CAOH2-ST3-N-6531-01	1 OF 1	0	CJ-M15W14-PR-A20-000142	1A	
2	551	5FA	100A-CAOH2-ST3-N-6532-01	1 OF 1	0	CJ-M15W14-PR-A20-000142	1A	
3	551	5FA	100A-CAOH2-ST3-N-6533-01	1 OF 1	0	CJ-M15W14-PR-A20-000142	1A	
4	551	5FA	125A-CAOH2-ST3-N-6521-01	1 OF 1	0	CJ-M15W14-PR-A20-000142	1A	
5	551	5FA	125A-CAOH2-ST3-N-6522-01	1 OF 1	0	CJ-M15W14-PR-A20-000142	1A	
6	551	5FA	125A-CAOH2-ST3-N-6523-01	1 OF 1	0	CJ-M15W14-PR-A20-000142	1A	
7	551	5FA	125A-CAOH2-ST3-N-6524-01	1 OF 1	0	CJ-M15W14-PR-A20-000142	1A	
8	551	5FA	125A-CAOH2-ST3-N-6529-01	1 OF 1	0	CJ-M15W14-PR-A20-000142	1A	
9	551	5FA	125A-CAOH2-ST3-N-6701-01	1 OF 1	0	CJ-M15W14-PR-A20-000142	1A	

ITEM NO.	W14-T-CAOH2-4601 A
SERVICE	Ca(OH)2 STORAGE TANK
Q'TY	1
TYPE	RECTANGULAR
SIZE W x L x H m	5.5 x (5.625 x 8.15 (EH 6.7))
CAPA. m3	(252 (EH 208)) 1A
MAT'L	PC + FRP

ITEM NO.	W14-T-CAOH2-4601 B
SERVICE	Ca(OH)2 STORAGE TANK
Q'TY	1
TYPE	RECTANGULAR
SIZE W x L x H m	5.8 x (5.425 x 8.15 (EH 6.7))
CAPA. m3	(243 (EH 212)) 1A
MAT'L	PC + FRP

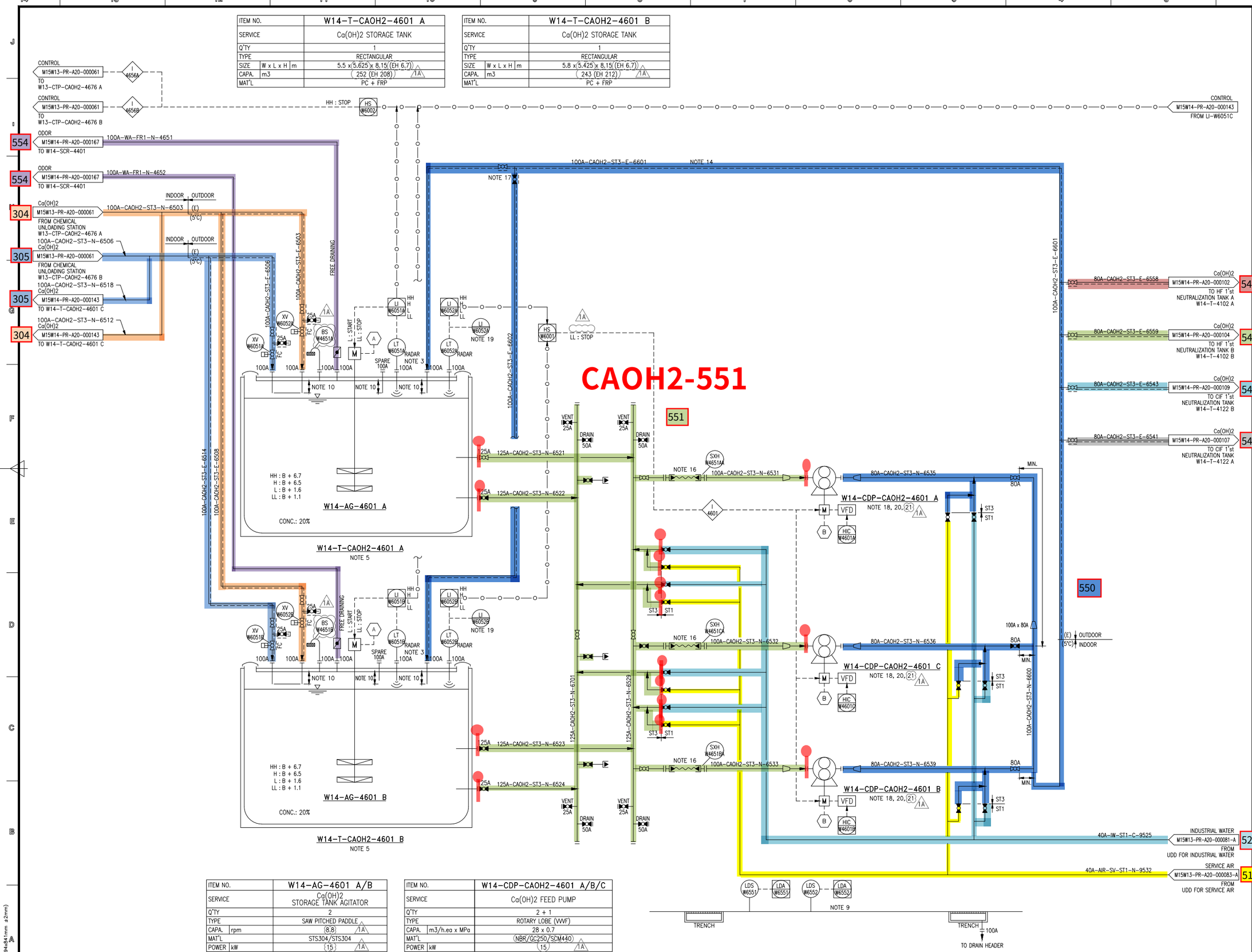

ITEM NO.	W14-AG-4601 A/B
SERVICE	Ca(OH)2 STORAGE TANK AGITATOR
Q'TY	2
TYPE	SAW PITCHED PADDLE
CAPA. rpm	(8.8) 1A
MAT'L	STS304/STS304
POWER kW	(15) 1A

ITEM NO.	W14-CDP-CAOH2-4601 A/B/C
SERVICE	Ca(OH)2 FEED PUMP
Q'TY	2 + 1
TYPE	ROTARY LOBE (VWF)
CAPA. m3/h.ea x MPa	28 x 0.7
MAT'L	(NBR/GC250/SCM440)
POWER kW	(15) 1A

대외비

KEY PLAN (5F)

NOTE

1. CaOH2 배관의 ELBOW 부분은 FLANGE 설치할 것.
2. 2m 이상 높은 곳에 설치된 밸브는 CHAIN VALVE 또는 PLATFORM 구성할 것.
3. CHEMICAL UNLOADING STATION에서 LEVEL을 볼 수 있도록 한다.
4. P&ID에 표기된 모든 ELECTRIC POWER는 VENDOR PRINT 접수 후 확정됨.
5. 5층에 설치됨.
6. 약품종류에 따라 LINE 색상을 구분하여야 한다.
7. 운전 시 CLOSE 되는 배관에는 LOTO 설치.
8. AGITATOR MAT'L 표기 : SHAFT/BLADE
9. CHEMICAL STORAGE TANK CURB 및 PUMP AREA에서 발생되는 DRAIN은 인근의 TRENCH로 집수되어, DRAIN HEADER로 이송된다.
10. TANK 내 유입, 육안 확인이 가능하고, 비산되지 않도록 최소 깊이로 반영할 것 (SLAB 로 부터 100mm 탈이질 것).
11. MANHOLE : 2개 이상 설치한다.
12. INTERLOCK NO. I-4601 (W14-CDP-CAOH2-4601 A/B/C AUTO STOP) :REMOTE STATUS에서 W14-T-CAOH2-4601 A/B LEVEL (LI-W6052A/B) LOW LOW STOP.
13. INTERLOCK NO. I-4656A/B (W13-CTP-CAOH2-4676 A/B AUTO STOP) :REMOTE STATUS에서 W14-T-CAOH2-4601 A/B/C LEVEL (LI-W6051A/B/C) HIGH HIGH STOP.
14. RINGMAIN LINE SCHEMATIC

SCHEMATIC DRAWING

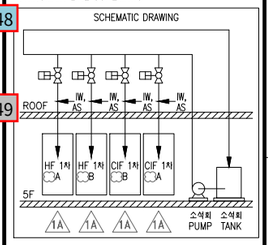

15. 내부 FRP LINING TANK의 SLEEVE는 SUS304 + FRP LINING 적용.
16. 기계 VENDOR LOOSE PART 공급.
17. 운전중 Ca(OH)2 TANK A/B RETURN VALVE 2ea 중 1ea는 반드시 OPEN 되어있어야 한다.
18. INTERNAL PSV 설치 할 것.
19. 5층 소석회 주입펌프 인근에 TANK LEVEL 확인 가능하도록 LOCAL PANEL 설치.
20. 소석회 주입 펌프 AREA에는 비산 방지막을 설치한다.
21. INTERNAL PSV SET PRESSRUE : 0.8 Mpag 1A

REV.	DESCRIPTION	DATE
1A	REVISED AFC	25.08.14
1	REVISED AFC	25.01.17
0	APPROVAL FOR CONSTRUCTION	24.09.30

수정 REV.	설 명 DESCRIPTION	날 짜 DATE

제 도 DRAWN BY	이 인 학
검 토 CHECKED BY	한 진 희
승 인 APPROVED BY	박 동 영
제 작 사	SK 에코플랜트
공 사 명 PROJECT TITLE	M15X Ph4 WWT Project
도면명 WG. TITLE	PIPING & INSTRUMENT DIAGRAM Ca(OH)2 STORAGE TANK & FEED PUMP (1/2)
축 척 SCALE	NONE
날 짜 DATE	2025. 08. 14
PROJECT NO.	22330D
도면번호 SHEET NO.	CJ-M15W14-PR-A20-000142
REV.	1A

경고 : 본 도면은 SK 에코플랜트의 기업비밀 자료로서, 어떠한 경우에도 무단 인 사용, 복제, 제3자에게 공개, 수정 및 유출할 수 없으며, 회사는 유포자의 불법 사용으로 인해 발생한 경우 유포자에게 민/형사상 책임을 요구할 수 있음.

C:₩Users₩TOP₩Desktop₩P&ID251013₩[M15X Ph-4 for 인허가]CAD FILE_0910₩CJ-M15W14-PR-A20-000142 R1 P&ID FOR Ca(OH

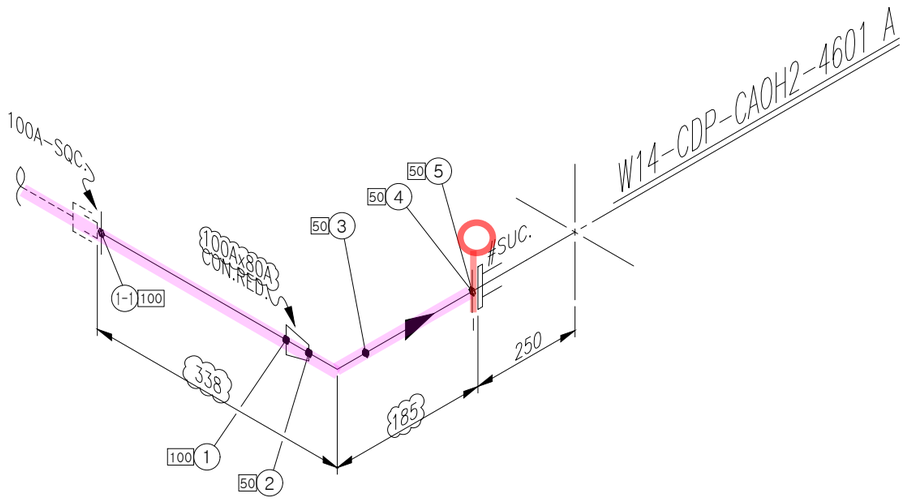

ITEM	SIZE	Q'TY	DESCRIPTION
		ST3	
P	100A	0.3M	PIPE, STS 304TP, ERW, BE – SCH 10S
P	80A	0.2M	PIPE, STS 304TP, ERW, BE – SCH 10S
E90	80A	1EA	ELBOW 90 DEG LR, STS304, ERW, BE – SCH 10S
RC	100Ax80A	1EA	REDUCER CON, STS304, ERW, BE – SCH 10S
SQC	100A	1EA	QUICK COUPLING(FLANGE TYPE ADAPTOR), W / CAMLOCK
F	80A	1EA	FLG SO, KS 10K, RF, STS304
G	80A	1EA	GASKET, KS 10K, RF, PTFE+EPDM, 3.0MM TH'K
B	80A	1SET	MACHINE BOLT & NUTS :STS 304 / W WASHERS
SH	80A	1EA	SHIELD
F	100A	1EA	FLG SO, KS 10K, RF, STS304
G	100A	1EA	GASKET, KS 10K, RF, PTFE+EPDM, 3.0MM TH'K
B	100A	1SET	MACHINE BOLT & NUTS :STS 304 / W WASHERS

<NOTE>
1. (*) FIELD ADJUST

* PIPE : P/P1 * 90° ELBOW : E90 * 45° ELBOW : E45 * TEE : T * RED.TEE : TR * STUB-IN : STU * REINFORCING PAD : RP * CON.RED : RC * ECC.RED : RE * CON.SWAGE : RCS/RCS1 * ECC.SWAGE : RES/RES1 * NIPPLE : NP/NP1/NP2 * CAP : CAP/CAP1 * PLUG : PLG * FULL COUPLING : FC * HALF COUPLING : HF/HF1
* STUB-IN : STU * SOCKET(HDPE/PVC) : SC * SADDLE(HDPE) : SD * FLANGE : F/F1 * GASKET : G/G1/G2 * BOLT & NUT : B/B1 * BLIND FLANGE : FB/FB1 * GATE VA. : VG/VG1/VG2 * BALL VA. : VB/VBL0/VB1/VB1L0/VB2/VB2L0 * BUTTERFLY VA. : VF/VF4 * CHECK VA. : VC/VC1/VC2/VC3/VC4/VC5/VC6/VC7
* GLOBE VA. : VL/VL1/VL2 * DIAPHRAGM VA. : VD/VDL0 * DAMPER : VP * QUICK COUPLING : SQC * FLEXIBLE JOINT(STEEL) : FLXB * FLEXIBLE JOINT(RUBBER) : FLXR * FLEXIBLE JOINT(STEEL_PTFE LINED) : FLXL * FLEXIBLE HOSE : FLXH * STEAM TRAP : ST * SPRAY NOZZLE : SPN * EMERGENCY SHOWER : SSH
* STRAINER(Y-TYPE) : YSTR * STRAINER(T-TYPE) : TSTR * STRAINER(BUCKET-TYPE) : BSTR * ANCHOR PLATE : STOP * BIRD SCREEN : BS * ISOLATION KIT : IK * UNLOADING BOX : UB * AIR TRAP : AT * LOTO : LOTO * SIGHT GLASS : SG * PRESSURE GAUGE : PG * SHILED : SH * SPECIAL BOLT & NUT : BL/BL1

CLIENT SK hynix

1

INSULATION	CODE	N	CONDITION	PRESS. (kg/cm2g)	TEMP. (°C)
	THICK.	–	DESIGN	1	60
			OPERATING	ATM	AMB

AREA W14
UNIT 5FA
REF. PLAN DWG. CJ-M15W14-PI-A30-050005-A
REF. P & ID CJ-M15W14-PR-A20-000142

REV. NO.	DATE	DESCRIPTION	BY	CHK	APP'D
0	25.01.24	APPROVED FOR CONSTRUCTION	황래종	안남후	박동영

CONTRACTOR SK ecoplant
PROJECT NAME M15X Ph4 Project
COMMODITY CAOH2
JOB NO. 22330D
LINE NO. 100A-CAOH2-ST3-N-6531
SH'T NO. 01 / 01
REV. 0

경고 : 본 도면은 SK HYNIX의 기업비밀 자료로서, 어떠한 경우에도 목적 외 사용, 복제, 제3자에게 공개, 누설 및 유출할 수 없으며, 회사는 유포자의 불법 사용으로 피해가 발생할 경우 유포자에게 민/형사상 책임을 요구할 수 있음.

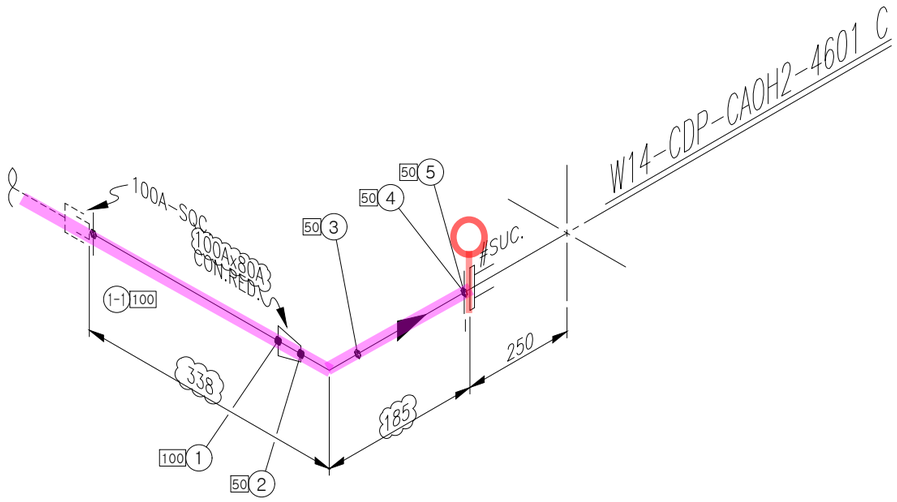

ITEM	SIZE	Q'TY	DESCRIPTION
		ST3	
P	100A	0.3M	PIPE, STS 304TP, ERW, BE – SCH 10S
P	80A	0.2M	PIPE, STS 304TP, ERW, BE – SCH 10S
E90	80A	1EA	ELBOW 90 DEG LR, STS304, ERW, BE – SCH 10S
RC	100A x 80A	1EA	REDUCER CON, STS304, ERW, BE – SCH 10S
~~SQC~~	~~100A~~	~~1EA~~	~~QUICK COUPLING(FLANGE TYPE ADAPTOR), W / CAMLOCK~~
F	80A	1EA	FLG SO, KS 10K, RF, STS304
G	80A	1EA	GASKET, KS 10K, RF, PTFE+EPDM, 3.0MM TH'K
B	80A	1SET	MACHINE BOLT & NUTS :STS 304 / W WASHERS
SH	80A	1EA	SHIELD
F	100A	1EA	FLG SO, KS 10K, RF, STS304
G	100A	1EA	GASKET, KS 10K, RF, PTFE+EPDM, 3.0MM TH'K
B	100A	1SET	MACHINE BOLT & NUTS :STS 304 / W WASHERS

<NOTE>
1. (*) FIELD ADJUST

* PIPE : P/P1 * 90° ELBOW : E90 * 45° ELBOW : E45 * TEE : T * RED.TEE : TR * STUB-IN : STU * REINFORCING PAD : RP * CON.RED : RC * ECC.RED : RE * CON.SWAGE : RCS/RCS1 * ECC.SWAGE : RES/RES1 * NIPPLE : NP/NP1/NP2 * CAP : CAP/CAP1 * PLUG : PLG * FULL COUPLING : FC * HALF COUPLING : HF/HF1
* STUB-IN : STU * SOCKET(HDPE/PVC) : SC * SADDLE(HDPE) : SD * FLANGE : F/F1 * GASKET : G/G1/G2 * BOLT & NUT : B/B1 * BLIND FLANGE : FB/FB1 * GATE VA. : VG/VG1/VG2 * BALL VA. : VB/VBL0/VB1/VB1L0/VB2/VB2L0 * BUTTERFLY VA. : VF/VF4 * CHECK VA. : VC/VC1/VC2/VC3/VC4/VC5/VC6/VC7
* GLOBE VA. : VL/VL1/VL2 * DIAPHRAGM VA. : VD/VDL0 * DAMPER : VP * QUICK COUPLING : SQC * FLEXIBLE JOINT(STEEL) : FLXB * FLEXIBLE JOINT(RUBBER) : FLXR * FLEXIBLE JOINT(STEEL_PTFE LINED) : FLXL * FLEXIBLE HOSE : FLXH * STEAM TRAP : ST * SPRAY NOZZLE : SPN * EMERGENCY SHOWER : SSH
* STRAINER(Y-TYPE) : YSTR * STRAINER(T-TYPE) : TSTR * STRAINER(BUCKET-TYPE) : BSTR * ANCHOR PLATE : STOP * BIRD SCREEN : BS * ISOLATION KIT : IK * UNLOADING BOX : UB * AIR TRAP : AT * LOTO : LOTO * SIGHT GLASS : SG * PRESSURE GAUGE : PG * SHILED : SH * SPECIAL BOLT & NUT : BL/BL1

CLIENT SK hynix 2

INSULATION	CODE	N	CONDITION	PRESS. (kg/cm2g)	TEMP. (°C)
	THICK.	–	DESIGN	1	60
			OPERATING	ATM	AMB

AREA W14
UNIT 5FA
REF. PLAN DWG. CJ-M15W14-PI-A30-050005-A
REF. P & ID CJ-M15W14-PR-A20-000142

REV. NO.	DATE	DESCRIPTION	BY	CHK	APP'D
0	25.01.24	APPROVED FOR CONSTRUCTION	황래종	안남후	박동영

CONTRACTOR SK ecoplant
PROJECT NAME M15X Ph4 Project
COMMODITY CAOH2
JOB NO. 22330D
LINE NO. 100A-CAOH2-ST3-N-6532
SH'T NO. 01 / 01
REV. 0

경고 : 본 도면은 SK HYNIX의 기업비밀 자료로서, 어떠한 경우에도 목적 외 사용, 복제, 제3자에게 공개, 누설 및 유출할 수 없으며, 회사는 유포자의 불법 사용으로 피해가 발생할 경우 유포자에게 민/형사상 책임을 요구할 수 있음.

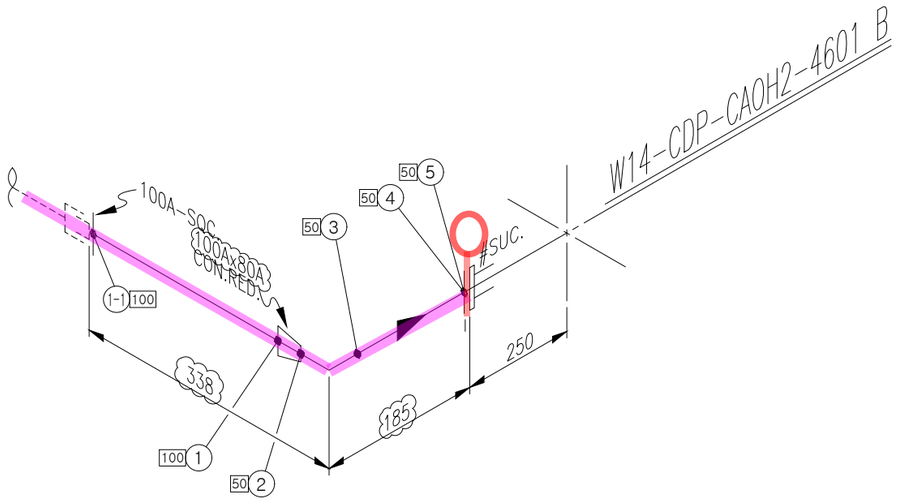

ITEM	SIZE	Q'TY	DESCRIPTION
		ST3	
P	100A	0.3M	PIPE, STS 304TP, ERW, BE – SCH 10S
P	80A	0.2M	PIPE, STS 304TP, ERW, BE – SCH 10S
E90	80A	1EA	ELBOW 90 DEG LR, STS304, ERW, BE – SCH 10S
RC	100Ax80A	1EA	REDUCER CON, STS304, ERW, BE – SCH 10S
~~SQC~~	~~100A~~	~~1EA~~	~~QUICK COUPLING(FLANGE TYPE ADAPTOR), W / CAMLOCK~~
F	80A	1EA	FLG SO, KS 10K, RF, STS304
G	80A	1EA	GASKET, KS 10K, RF, PTFE+EPDM, 3.0MM TH'K
B	80A	1SET	MACHINE BOLT & NUTS :STS 304 / W WASHERS
SH	80A	1EA	SHIELD
F	100A	1EA	FLG SO, KS 10K, RF, STS304
G	100A	1EA	GASKET, KS 10K, RF, PTFE+EPDM, 3.0MM TH'K
B	100A	1SET	MACHINE BOLT & NUTS :STS 304 / W WASHERS

<NOTE>
1. (*) FIELD ADJUST

* PIPE : P/P1 * 90° ELBOW : E90 * 45° ELBOW : E45 * TEE : T * RED.TEE : TR * STUB-IN : STU * REINFORCING PAD : RP * CON.RED : RC * ECC.RED : RE * CON.SWAGE : RCS/RCS1 * ECC.SWAGE : RES/RES1 * NIPPLE : NP/NP1/NP2 * CAP : CAP/CAP1 * PLUG : PLG * FULL COUPLING : FC * HALF COUPLING : HF/HF1
* STUB-IN : STU * SOCKET(HDPE/PVC) : SC * SADDLE(HDPE) : SD * FLANGE : F/F1 * GASKET : G/G1/G2 * BOLT & NUT : B/B1 * BLIND FLANGE : FB/FB1 * GATE VA. : VG/VG1/VG2 * BALL VA. : VB/VBL0/VB1/VB1L0/VB2/VB2L0 * BUTTERFLY VA. : VF/VF4 * CHECK VA. : VC/VC1/VC2/VC3/VC4/VC5/VC6/VC7
* GLOBE VA. : VL/VL1/VL2 * DIAPHRAGM VA. : VD/VDL0 * DAMPER : VP * QUICK COUPLING : SQC * FLEXIBLE JOINT(STEEL) : FLXB * FLEXIBLE JOINT(RUBBER) : FLXR * FLEXIBLE JOINT(STEEL_PTFE LINED) : FLXL * FLEXIBLE HOSE : FLXH * STEAM TRAP : ST * SPRAY NOZZLE : SPN * EMERGENCY SHOWER : SSH
* STRAINER(Y-TYPE) : YSTR * STRAINER(T-TYPE) : TSTR * STRAINER(BUCKET-TYPE) : BSTR * ANCHOR PLATE : STOP * BIRD SCREEN : BS * ISOLATION KIT : IK * UNLOADING BOX : UB * AIR TRAP : AT * LOTO : LOTO * SIGHT GLASS : SG * PRESSURE GAUGE : PG * SHILED : SH * SPECIAL BOLT & NUT : BL/BL1

CLIENT SK hynix 3

INSULATION	CODE	N	CONDITION	PRESS. (kg/cm2g)	TEMP. (°C)
	THICK.	–	DESIGN	1	60
			OPERATING	ATM	AMB

AREA W14
UNIT 5FA
REF. PLAN DWG. CJ-M15W14-PI-A30-050005-A
REF. P & ID CJ-M15W14-PR-A20-000142

REV. NO.	DATE	DESCRIPTION	BY	CHK	APP'D
0	25.01.24	APPROVED FOR CONSTRUCTION	황래종	안남후	박동영

CONTRACTOR SK ecoplant
PROJECT NAME M15X Ph4 Project
COMMODITY CAOH2
JOB NO. 22330D
LINE NO. 100A-CAOH2-ST3-N-6533
SH'T NO. 01 / 01
REV. 0

경고 : 본 도면은 SK HYNIX의 기업비밀 자료로서, 어떠한 경우에도 목적 외 사용, 복제, 제3자에게 공개, 누설 및 유출할 수 없으며, 회사는 유포자의 불법 사용으로 피해가 발생할 경우 유포자에게 민/형사상 책임을 요구할 수 있음.

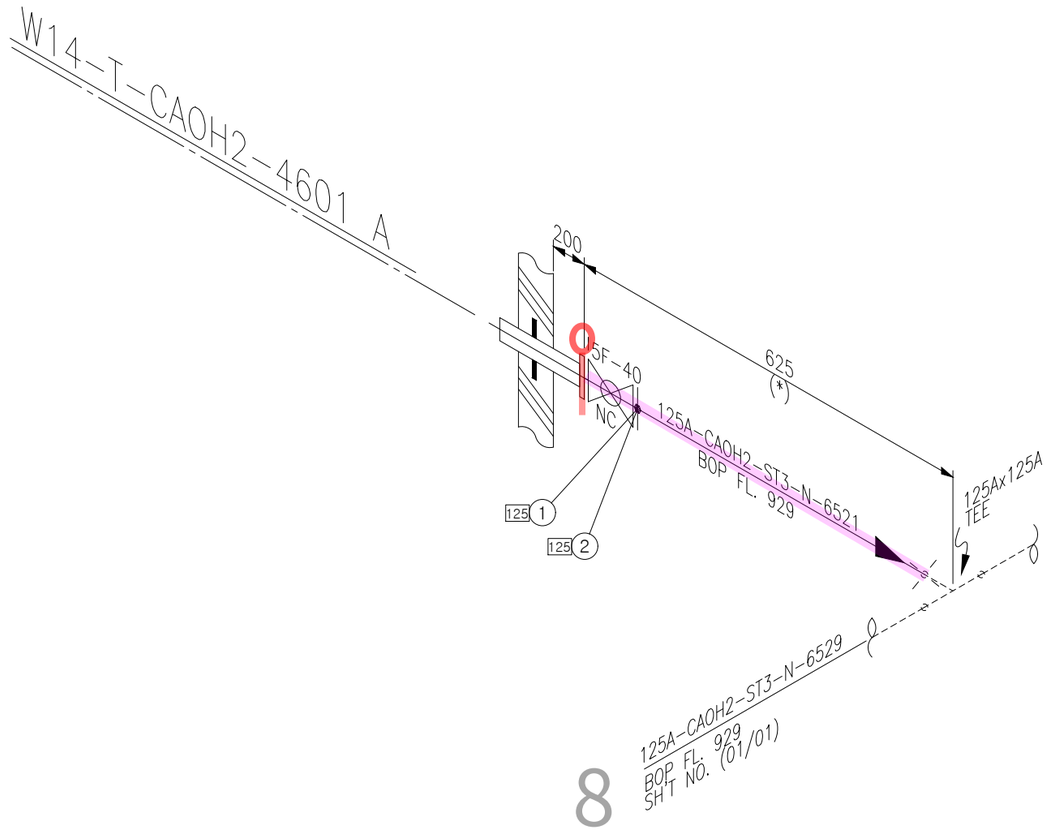

<NOTE>
1. (*) FIELD ADJUST

ITEM	SIZE	Q'TY	DESCRIPTION
		ST3	
P	125A	0.6M	PIPE, STS 304TP, ERW, BE – SCH 10S
VB	125A	1EA	BALL VALVE, KS 10K, RF FLG'D, BODY–SSC13 /
			TRIM–STS304 / SEAT–PTFE, FB, LEVER
F	125A	1EA	FLG SO, KS 10K, RF, STS304
G	125A	1EA	GASKET, KS 10K, RF, PTFE+EPDM, 3.0MM TH'K
G1	125A	1EA	GASKET, KS 10K, FF, PTFE+EPDM, 3.0MM TH'K
B	125A	2SET	MACHINE BOLT & NUTS :STS 304 / W WASHERS
SH	125A	2EA	SHIELD
LOTO	125A	1EA	LOTO

* PIPE : P/P1 * 90° ELBOW : E90 * 45° ELBOW : E45 * TEE : T * RED.TEE : TR * STUB-IN : STU * REINFORCING PAD : RP * CON.RED : RC * ECC.RED : RE * CON.SWAGE : RCS/RCS1 * ECC.SWAGE : RES/RES1 * NIPPLE : NP/NP1/NP2 * CAP : CAP/CAP1 * PLUG : PLG * FULL COUPLING : FC * HALF COUPLING : HF/HF1
* STUB-IN : STU * SOCKET(HDPE/PVC) : SC * SADDLE(HDPE) : SD * FLANGE : F/F1 * GASKET : G/G1/G2 * BOLT & NUT : B/B1 * BLIND FLANGE : FB/FB1 * GATE VA. : VG/VG1/VG2 * BALL VA. : VB/VBLO/VB1/VB1LO/VB2/VB2LO * BUTTERFLY VA. : VF/VF4 * CHECK VA. : VC/VC1/VC2/VC3/VC4/VC5/VC6/VC7
* GLOBE VA. : VL/VL1/VL2 * DIAPHRAGM VA. : VD/VDLO * DAMPER : VP * QUICK COUPLING : SQC * FLEXIBLE JOINT(STEEL) : FLXB * FLEXIBLE JOINT(RUBBER) : FLXR * FLEXIBLE JOINT(STEEL_PTFE LINED) : FLXL * FLEXIBLE HOSE : FLXH * STEAM TRAP : ST * SPRAY NOZZLE : SPN * EMERGENCY SHOWER : SSH
* STRAINER(Y-TYPE) : YSTR * STRAINER(T-TYPE) : TSTR * STRAINER(BUCKET-TYPE) : BSTR * ANCHOR PLATE : STOP * BIRD SCREEN : BS * ISOLATION KIT : IK * UNLOADING BOX : UB * AIR TRAP : AT * LOTO : LOTO * SIGHT GLASS : SG * PRESSURE GAUGE : PG * SHILED : SH * SPECIAL BOLT & NUT : BL/BL1

INSULATION	CODE	N	CONDITION	PRESS. (kg/cm2g)	TEMP. (°C)
	THICK.	–	DESIGN	1	60
			OPERATING	ATM	AMB

AREA W14
UNIT 5FA
REF. PLAN DWG. CJ-M15W14-PI-A30-050005-A
REF. P & ID CJ-M15W14-PR-A20-000142

REV. NO.	DATE	DESCRIPTION	BY	CHK	APP'D
0	25.01.24	APPROVED FOR CONSTRUCTION	황래종	안남후	박동영

CLIENT SK hynix 4

CONTRACTOR SK ecoplant

PROJECT NAME M15X Ph4 Project

COMMODITY CAOH2

JOB NO. 22330D

LINE NO. 125A-CAOH2-ST3-N-6521

SH'T NO. 01 / 01

REV. 0

경고 : 본 도면은 SK HYNIX의 기업비밀 자료로서, 어떠한 경우에도 목적 외 사용, 복제, 제3자에게 공개, 누설 및 유출할 수 없으며, 회사는 유포자의 불법 사용으로 피해가 발생할 경우 유포자에게 민/형사상 책임을 요구할 수 있음.

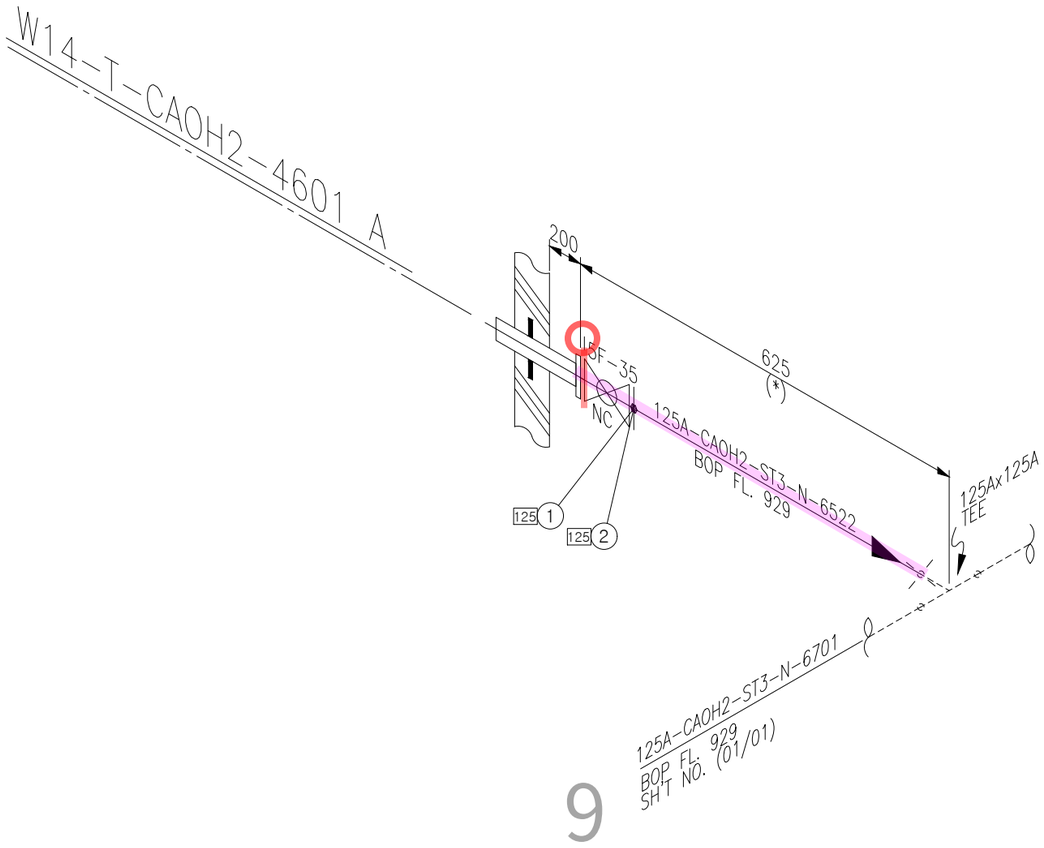

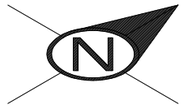

SK ecoplant

ITEM	SIZE	Q'TY	DESCRIPTION
		ST3	
P	125A	0.6M	PIPE, STS 304TP, ERW, BE – SCH 10S
VB	125A	1EA	BALL VALVE, KS 10K, RF FLG'D, BODY–SSC13 /
			TRIM–STS304 / SEAT–PTFE, FB, LEVER
F	125A	1EA	FLG SO, KS 10K, RF, STS304
G	125A	1EA	GASKET, KS 10K, RF, PTFE+EPDM, 3.0MM TH'K
G1	125A	1EA	GASKET, KS 10K, FF, PTFE+EPDM, 3.0MM TH'K
B	125A	2SET	MACHINE BOLT & NUTS :STS 304 / W WASHERS
SH	125A	2EA	SHIELD
LOTO	125A	1EA	LOTO

<NOTE>
1. (*) FIELD ADJUST

* PIPE : P/P1 * 90° ELBOW : E90 * 45° ELBOW : E45 * TEE : T * RED.TEE : TR * STUB-IN : STU * REINFORCING PAD : RP * CON.RED : RC * ECC.RED : RE * CON.SWAGE : RCS/RCS1 * ECC.SWAGE : RES/RES1 * NIPPLE : NP/NP1/NP2 * CAP : CAP/CAP1 * PLUG : PLG * FULL COUPLING : FC * HALF COUPLING : HF/HF1
* STUB-IN : STU * SOCKET(HDPE/PVC) : SC * SADDLE(HDPE) : SD * FLANGE : F/F1 * GASKET : G/G1/G2 * BOLT & NUT : B/B1 * BLIND FLANGE : FB/FB1 * GATE VA. : VG/VC1/VG2 * BALL VA. : VB/VBLO/VB1/VB1LO/VB2/VB2LO * BUTTERFLY VA. : VF/VF4 * CHECK VA. : VC/VC1/VC2/VC3/VC4/VC5/VC6/VC7
* GLOBE VA. : VL/VL1/VL2 * DIAPHRAGM VA. : VD/VDLO * DAMPER : VP * QUICK COUPLING : SQC * FLEXIBLE JOINT(STEEL) : FLXB * FLEXIBLE JOINT(RUBBER) : FLXR * FLEXIBLE JOINT(STEEL_PTFE LINED) : FLXL * FLEXIBLE HOSE : FLXH * STEAM TRAP : ST * SPRAY NOZZLE : SPN * EMERGENCY SHOWER : SSH
* STRAINER(Y-TYPE) : YSTR * STRAINER(T-TYPE) : TSTR * STRAINER(BUCKET-TYPE) : BSTR * ANCHOR PLATE : STOP * BIRD SCREEN : BS * ISOLATION KIT : IK * UNLOADING BOX : UB * AIR TRAP : AT * LOTO : LOTO * SIGHT GLASS : SG * PRESSURE GAUGE : PG * SHILED : SH * SPECIAL BOLT & NUT : BL/BL1

CLIENT SK hynix 5

INSULATION	CODE	N	CONDITION	PRESS. (kg/cm2g)	TEMP. (°C)
	THICK.	–	DESIGN	1	60
			OPERATING	ATM	AMB

AREA	W14
UNIT	5FA
REF. PLAN DWG.	CJ-M15W14-PI-A30-050005-A
REF. P & ID	CJ-M15W14-PR-A20-000142

REV. NO.	DATE	DESCRIPTION	BY	CHK	APP'D
0	25.01.24	APPROVED FOR CONSTRUCTION	황래종	안남후	박동영

CONTRACTOR SK ecoplant

PROJECT NAME: M15X Ph4 Project

COMMODITY: CAOH2

JOB NO.: 22330D

LINE NO.: 125A-CAOH2-ST3-N-6522

SH'T NO.: 01 / 01

REV.: 0

경고 : 본 도면은 SK HYNIX의 기업비밀 자료로서, 어떠한 경우에도 목적 외 사용, 복제, 제3자에게 공개, 누설 및 유출할 수 없으며, 회사는 유포자의 불법 사용으로 피해가 발생할 경우 유포자에게 민/형사상 책임을 요구할 수 있음.

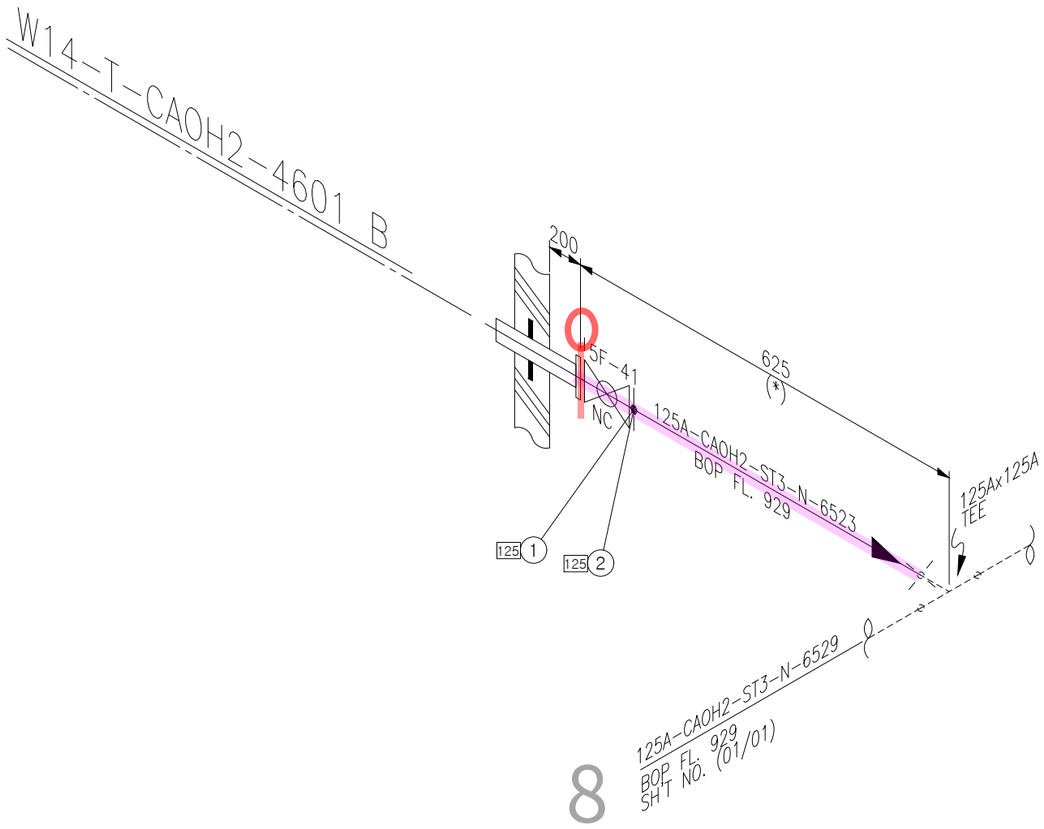

8

ITEM	SIZE	Q'TY	DESCRIPTION
		ST3	
P	125A	0.6M	PIPE, STS 304TP, ERW, BE – SCH 10S
VB	125A	1EA	BALL VALVE, KS 10K, RF FLG'D, BODY–SSC13 /
			TRIM–STS304 / SEAT–PTFE, FB, LEVER
F	125A	1EA	FLG SO, KS 10K, RF, STS304
G	125A	1EA	GASKET, KS 10K, RF, PTFE+EPDM, 3.0MM TH'K
G1	125A	1EA	GASKET, KS 10K, FF, PTFE+EPDM, 3.0MM TH'K
B	125A	2SET	MACHINE BOLT & NUTS :STS 304 / W WASHERS
SH	125A	2EA	SHIELD
LOTO	125A	1EA	LOTO

<NOTE>
1. (*) FIELD ADJUST

* PIPE : P/P1 * 90° ELBOW : E90 * 45° ELBOW : E45 * TEE : T * RED.TEE : TR * STUB-IN : STU * REINFORCING PAD : RP * CON.RED : RC * ECC.RED : RE * CON.SWAGE : RCS/RCS1 * ECC.SWAGE : RES/RES1 * NIPPLE : NP/NP1/NP2 * CAP : CAP/CAP1 * PLUG : PLG * FULL COUPLING : FC * HALF COUPLING : HF/HF1
* STUB-IN : STU * SOCKET(HDPE/PVC) : SC * SADDLE(HDPE) : SD * FLANGE : F/F1 * GASKET : G/G1/G2 * BOLT & NUT : B/B1 * BLIND FLANGE : FB/FB1 * GATE VA. : VG/VG1/VG2 * BALL VA. : VB/VBLO/VB1/VB1LO/VB2/VB2LO * BUTTERFLY VA. : VF/VF4 * CHECK VA. : VC/VC1/VC2/VC3/VC4/VC5/VC6/VC7
* GLOBE VA. : VL/VL1/VL2 * DIAPHRAGM VA. : VD/VDLO * DAMPER : VP * QUICK COUPLING : SQC * FLEXIBLE JOINT(STEEL) : FLXB * FLEXIBLE JOINT(RUBBER) : FLXR * FLEXIBLE JOINT(STEEL_PTFE LINED) : FLXL * FLEXIBLE HOSE : FLXH * STEAM TRAP : ST * SPRAY NOZZLE : SPN * EMERGENCY SHOWER : SSH
* STRAINER(Y-TYPE) : YSTR * STRAINER(T-TYPE) : TSTR * STRAINER(BUCKET-TYPE) : BSTR * ANCHOR PLATE : STOP * BIRD SCREEN : BS * ISOLATION KIT : IK * UNLOADING BOX : UB * AIR TRAP : AT * LOTO : LOTO * SIGHT GLASS : SG * PRESSURE GAUGE : PG * SHILED : SH * SPECIAL BOLT & NUT : BL/BL1

CLIENT SK hynix

6

INSULATION	CODE	N	CONDITION	PRESS. (kg/cm2g)	TEMP. (°C)
	THICK.	–	DESIGN	1	60
			OPERATING	ATM	AMB

AREA	W14
UNIT	5FA
REF. PLAN DWG.	CJ-M15W14-PI-A30-050005-A
REF. P & ID	CJ-M15W14-PR-A20-000142

REV. NO.	DATE	DESCRIPTION	BY	CHK	APP'D
0	25.01.24	APPROVED FOR CONSTRUCTION	황래종	안남후	박동영

CONTRACTOR SK ecoplant

PROJECT NAME: M15X Ph4 Project

COMMODITY: CAOH2

JOB NO.: 22330D

LINE NO.: 125A-CAOH2-ST3-N-6523

SH'T NO.: 01 / 01

REV.: 0

경고 : 본 도면은 SK HYNIX의 기업비밀 자료로서, 어떠한 경우에도 목적 외 사용, 복제, 제3자에게 공개, 누설 및 유출할 수 없으며, 회사는 유포자의 불법 사용으로 피해가 발생할 경우 유포자에게 민/형사상 책임을 요구할 수 있음.

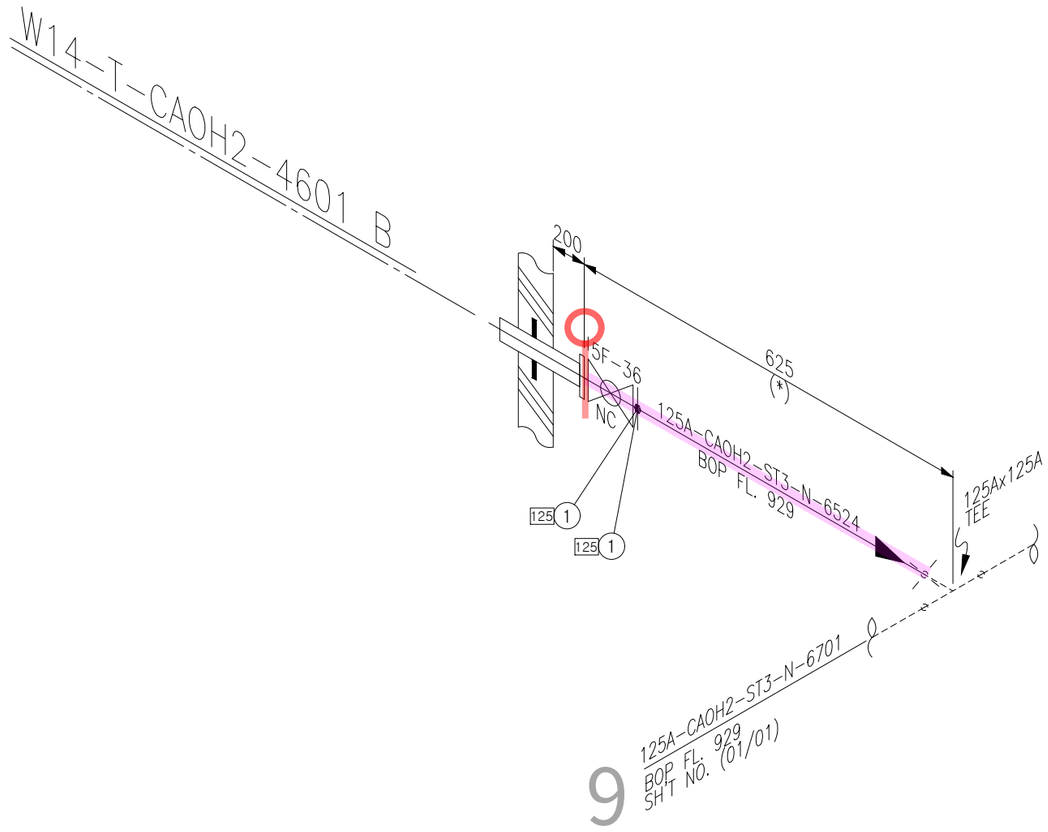

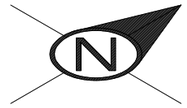

SK ecoplant

ITEM	SIZE	Q'TY	DESCRIPTION
		ST3	
P	125A	0.6M	PIPE, STS 304TP, ERW, BE – SCH 10S
VB	125A	1EA	BALL VALVE, KS 10K, RF FLG'D, BODY–SSC13 /
			TRIM–STS304 / SEAT–PTFE, FB, LEVER
F	125A	1EA	FLG SO, KS 10K, RF, STS304
G	125A	1EA	GASKET, KS 10K, RF, PTFE+EPDM, 3.0MM TH'K
G1	125A	1EA	GASKET, KS 10K, FF, PTFE+EPDM, 3.0MM TH'K
B	125A	2SET	MACHINE BOLT & NUTS :STS 304 / W WASHERS
SH	125A	2EA	SHIELD
LOTO	125A	1EA	LOTO

<NOTE>
1. (*) FIELD ADJUST

* PIPE : P/P1 * 90° ELBOW : E90 * 45° ELBOW : E45 * TEE : T * RED.TEE : TR * STUB-IN : STU * REINFORCING PAD : RP * CON.RED : RC * ECC.RED : RE * CON.SWAGE : RCS/RCS1 * ECC.SWAGE : RES/RES1 * NIPPLE : NP/NP1/NP2 * CAP : CAP/CAP1 * PLUG : PLG * FULL COUPLING : FC * HALF COUPLING : HF/HF1
* STUB-IN : STU * SOCKET(HDPE/PVC) : SC * SADDLE(HDPE) : SD * FLANGE : F/F1 * GASKET : G/G1/G2 * BOLT & NUT : B/B1 * BLIND FLANGE : FB/FB1 * GATE VA. : VG/VG1/VG2 * BALL VA. : VB/VBLO/VB1/VB1LO/VB2/VB2LO * BUTTERFLY VA. : VF/VF4 * CHECK VA. : VC/VC1/VC2/VC3/VC4/VC5/VC6/VC7
* GLOBE VA. : VL/VL1/VL2 * DIAPHRAGM VA. : VD/VDLO * DAMPER : VP * QUICK COUPLING : SQC * FLEXIBLE JOINT(STEEL) : FLXB * FLEXIBLE JOINT(RUBBER) : FLXR * FLEXIBLE JOINT(STEEL_PTFE LINED) : FLXL * FLEXIBLE HOSE : FLXH * STEAM TRAP : ST * SPRAY NOZZLE : SPN * EMERGENCY SHOWER : SSH
* STRAINER(Y-TYPE) : YSTR * STRAINER(T-TYPE) : TSTR * STRAINER(BUCKET-TYPE) : BSTR * ANCHOR PLATE : STOP * BIRD SCREEN : BS * ISOLATION KIT : IK * UNLOADING BOX : UB * AIR TRAP : AT * LOTO : LOTO * SIGHT GLASS : SG * PRESSURE GAUGE : PG * SHILED : SH * SPECIAL BOLT & NUT : BL/BL1

CLIENT SK hynix 7

INSULATION	CODE	N	CONDITION	PRESS. (kg/cm2g)	TEMP. (°C)
	THICK.	–	DESIGN	1	60
			OPERATING	ATM	AMB

AREA W14
UNIT 5FA
REF. PLAN DWG. CJ-M15W14-PI-A30-050005-A
REF. P & ID CJ-M15W14-PR-A20-000142

REV. NO.	DATE	DESCRIPTION	BY	CHK	APP'D
0	25.01.24	APPROVED FOR CONSTRUCTION	황래종	안남후	박동영

CONTRACTOR SK ecoplant
PROJECT NAME M15X Ph4 Project
COMMODITY CAOH2
JOB NO. 22330D
LINE NO. 125A-CAOH2-ST3-N-6524
SH'T NO. 01 / 01
REV. 0

경고 : 본 도면은 SK HYNIX의 기업비밀 자료로서, 어떠한 경우에도 목적 외 사용, 복제, 제3자에게 공개, 누설 및 유출할 수 없으며, 회사는 유포자의 불법 사용으로 피해가 발생할 경우 유포자에게 민/형사상 책임을 요구할 수 있음.

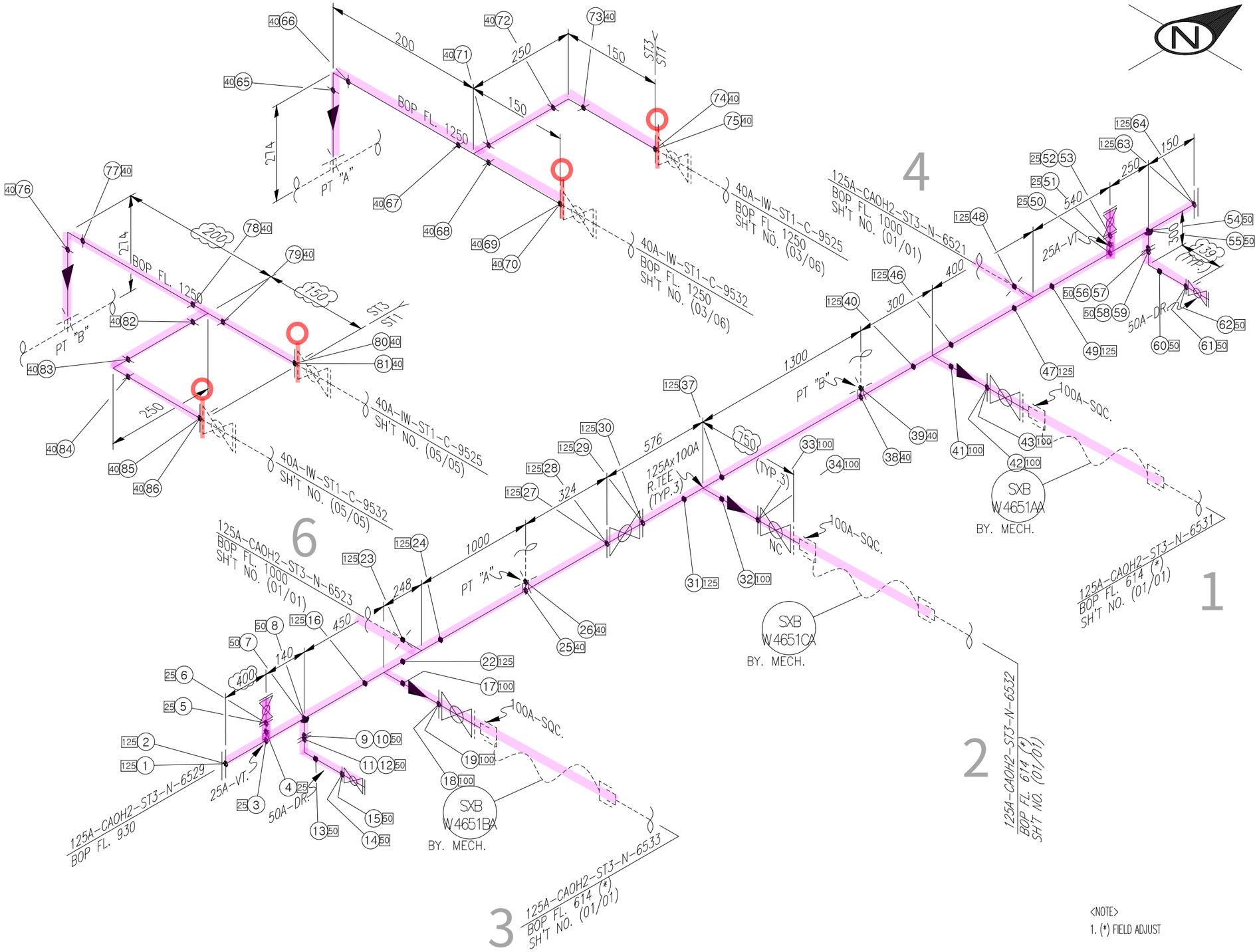

<NOTE>
1. (*) FIELD ADJUST

ITEM	SIZE	Q'TY	DESCRIPTION
		ST3	
P	125A	5.9M	PIPE, STS 304TP, ERW, BE – SCH 10S
P	100A	2.1M	PIPE, STS 304TP, ERW, BE – SCH 10S
P	50A	1.0M	PIPE, STS 304TP, ERW, BE – SCH 10S
P	40A	2.0M	PIPE, STS 304TP, ERW, PE – SCH 10S
P	25A	0.2M	PIPE, STS 304TP, ERW, PE – SCH 10S
T	125A	2EA	TEE EQUAL, STS304, ERW, BE – SCH 10S
E90	40A	4EA	ELBOW 90 DEG, STSF304, SW – SCH 10S
E90	50A	2EA	ELBOW 90 DEG LR, STS304, ERW, BE – SCH 10S
T	40A	2EA	TEE EQUAL, STSF304, SW – SCH 10S
TR	125Ax100A	3EA	TEE RED, STS304, ERW, BE – SCH 10S
STU	125Ax50A	2EA	STUB-IN BRANCH
HF	40A	2EA	COUPLING HALF, STSF304, SW – SCH 10S
HF	25A	2EA	COUPLING HALF, STSF304, SW – SCH 10S
VB	125A	1EA	BALL VALVE, KS 10K, RF FLG'D, BODY-SSC13 /
			TRIM-STS304 / SEAT-PTFE, FB, LEVER
VB	100A	3EA	BALL VALVE, KS 10K, RF FLG'D, BODY-SSC13 /
			TRIM-STS304 / SEAT-PTFE, FB, LEVER
VB	50A	3EA	BALL VALVE, KS 10K, RF FLG'D, BODY-SSC13 /
			TRIM-STS304 / SEAT-PTFE, FB, LEVER
VB	25A	2EA	BALL VALVE, KS 10K, RF FLG'D, BODY-STSF304 /
			TRIM-STS304 / SEAT-PTFE, FB, LEVER
F	125A	4EA	FLG SO, KS 10K, RF, STS304
F	100A		FLG SO, KS 10K, RF, STS304
F	50A	6EA	FLG SO, KS 10K, RF, STS304
F	40A	4EA	FLG SO, KS 10K, RF, STS304
F	25A	3EA	FLG SO, KS 10K, RF, STS304
FB	125A	2EA	FLG BLIND, KS 10K, RF, STS304
FB	50A	2EA	FLG BLIND, KS 10K, RF, STS304
FB	25A	2EA	FLG BLIND, KS 10K, RF, STS304
G	125A	4EA	GASKET, KS 10K, RF, PTFE+EPDM, 3.0MM TH'K
G	100A	3SET	GASKET, KS 10K, RF, PTFE+EPDM, 3.0MM TH'K
G	50A	6EA	GASKET, KS 10K, RF, PTFE+EPDM, 3.0MM TH'K
G	40A	4EA	GASKET, KS 10K, RF, PTFE+EPDM, 3.0MM TH'K
G	25A	4EA	GASKET, KS 10K, RF, PTFE+EPDM, 3.0MM TH'K
B	125A	4SET	MACHINE BOLT & NUTS :STS 304 / W WASHERS
B	100A		MACHINE BOLT & NUTS :STS 304 / W WASHERS
B	50A	6SET	MACHINE BOLT & NUTS :STS 304 / W WASHERS
B	40A	4SET	MACHINE BOLT & NUTS :STS 304 / W WASHERS
B	25A	4SET	MACHINE BOLT & NUTS :STS 304 / W WASHERS
SQC	100A	3EA	QUICK COUPLING(FLANGE TYPE ADAPTOR), W / CAMLOCK
LOTO	100A	1EA	LOTO
SH	125A	4EA	SHIELD
SH	100A	6EA	SHIELD
SH	50A	6EA	SHIELD
SH	25A	4EA	SHIELD

* PIPE : P/P1 * 90° ELBOW : E90 * 45° ELBOW : E45 * TEE : T * RED.TEE : TR * STUB-IN : STU * REINFORCING PAD : RP * CON.RED : RC * ECC.RED : RE * CON.SWAGE : RCS/RCS1 * ECC.SWAGE : RES/RES1 * NIPPLE : NP/NP1/NP2 * CAP : CAP/CAP1 * PLUG : PLG * FULL COUPLING : FC * HALF COUPLING : HF/HF1
* STUB-IN : STU * SOCKET(HDPE/PVC) : SC * SADDLE(HDPE) : SD * FLANGE : F/F1 * GASKET : G/G1/G2 * BOLT & NUT : B/B1 * BLIND FLANGE : FB/FB1 * GATE VA. : VG/VG1/VG2 * BALL VA. : VB/VBL0/VB1/VB1L0/VB2/VB2L0 * BUTTERFLY VA. : VF/VF4 * CHECK VA. : VC/VC1/VC2/VC3/VC4/VC5/VC6/VC7
* GLOBE VA. : VL/VL1/VL2 * DIAPHRAGM VA. : VD/VDL0 * DAMPER : VP * QUICK COUPLING : SQC * FLEXIBLE JOINT(STEEL) : FLXB * FLEXIBLE JOINT(RUBBER) : FLXR * FLEXIBLE JOINT(STEEL_PTFE LINED) : FLXL * FLEXIBLE HOSE : FLXH * STEAM TRAP : ST * SPRAY NOZZLE : SPN * EMERGENCY SHOWER : SSH
* STRAINER(Y-TYPE) : YSTR * STRAINER(T-TYPE) : TSTR * STRAINER(BUCKET-TYPE) : BSTR * ANCHOR PLATE : STOP * BIRD SCREEN : BS * ISOLATION KIT : IK * UNLOADING BOX : UB * AIR TRAP : AT * LOTO : LOTO * SIGHT GLASS : SG * PRESSURE GAUGE : PG * SHILED : SH * SPECIAL BOLT & NUT : BL/BL1

CLIENT SK hynix

8

INSULATION	CODE	N	CONDITION	PRESS. (kg/cm2g)	TEMP. (°C)
	THICK.	–	DESIGN	1	60
			OPERATING	ATM	AMB

AREA W14
UNIT 5FA
REF. PLAN DWG. CJ-M15W14-PI-A30-050005-A
REF. P & ID CJ-M15W14-PR-A20-000142

REV. NO.	DATE	DESCRIPTION	BY	CHK	APP'D
0	25.01.24	APPROVED FOR CONSTRUCTION	황래종	안남후	박동영

CONTRACTOR SK ecoplant
COMMODITY CAOH2
LINE NO. 125A-CAOH2-ST3-N-6529

PROJECT NAME M15X Ph4 Project
JOB NO. 22330D
SH'T NO. 01 / 01
REV. 0

경고 : 본 도면은 SK HYNIX의 기업비밀 자료로서, 어떠한 경우에도 목적 외 사용, 복제, 제3자에게 공개, 누설 및 유출할 수 없으며, 회사는 유포자의 불법 사용으로 피해가 발생할 경우 유포자에게 민/형사상 책임을 요구할 수 있음.

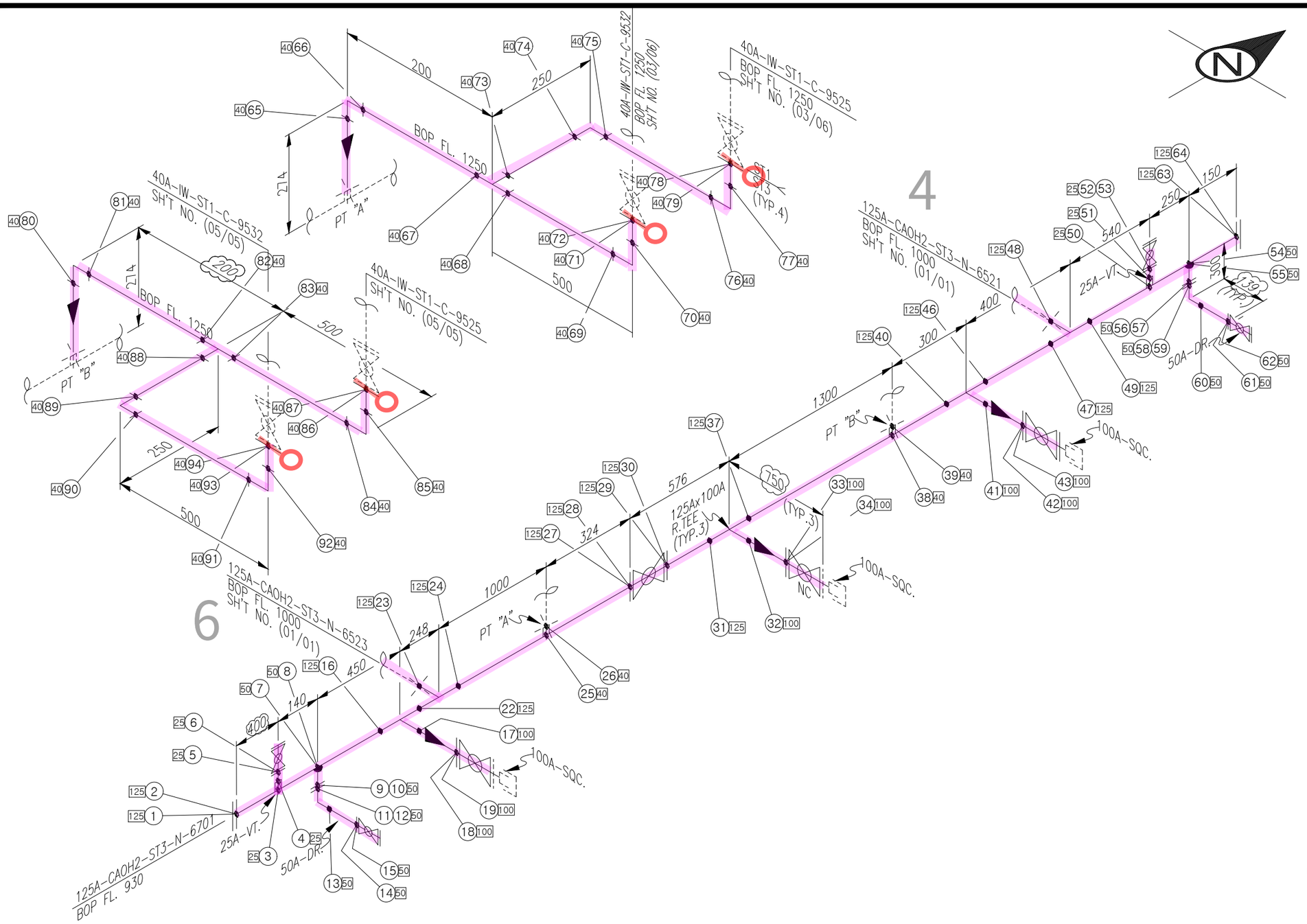

ITEM	SIZE	Q'TY	DESCRIPTION
		ST3	
P	125A	5.9M	PIPE, STS 304TP, ERW, BE – SCH 10S
P	100A	2.1M	PIPE, STS 304TP, ERW, BE – SCH 10S
P	50A	1.0M	PIPE, STS 304TP, ERW, BE – SCH 10S
P	40A	3.0M	PIPE, STS 304TP, ERW, PE – SCH 10S
P	25A	0.2M	PIPE, STS 304TP, ERW, PE – SCH 10S
T	125A	2EA	TEE EQUAL, STS304, ERW, BE – SCH 10S
E90	40A	8EA	ELBOW 90 DEG, STSF304, SW – SCH 10S
E90	50A	2EA	ELBOW 90 DEG LR, STS304, ERW, BE – SCH 10S
T	40A	2EA	TEE EQUAL, STSF304, SW – SCH 10S
TR	125Ax100A	3EA	TEE RED, STS304, ERW, BE – SCH 10S
STU	125Ax50A	2EA	STUB-IN BRANCH
HF	40A	2EA	COUPLING HALF, STSF304, SW – SCH 10S
HF	25A	2EA	COUPLING HALF, STSF304, SW – SCH 10S
VB	125A	1EA	BALL VALVE, KS 10K, RF FLG'D, BODY-SSC13 /
			TRIM-STS304 / SEAT-PTFE, FB, LEVER
VB	100A	2EA	BALL VALVE, KS 10K, RF FLG'D, BODY-SSC13 /
			TRIM-STS304 / SEAT-PTFE, FB, LEVER
VB	50A	2EA	BALL VALVE, KS 10K, RF FLG'D, BODY-SSC13 /
			TRIM-STS304 / SEAT-PTFE, FB, LEVER
VB	25A	2EA	BALL VALVE, KS 10K, RF FLG'D, BODY-STSF304 /
			TRIM-STS304 / SEAT-PTFE, FB, LEVER
F	125A	4EA	FLG SO, KS 10K, RF, STS304
F	100A	3EA	FLG SO, KS 10K, RF, STS304
F	50A	6EA	FLG SO, KS 10K, RF, STS304
F	40A	4EA	FLG SO, KS 10K, RF, STS304
F	25A	2EA	FLG SO, KS 10K, RF, STS304
FB	125A	2EA	FLG BLIND, KS 10K, RF, STS304
FB	50A	2EA	FLG BLIND, KS 10K, RF, STS304
FB	25A	2EA	FLG BLIND, KS 10K, RF, STS304
G	125A	4EA	GASKET, KS 10K, RF, PTFE+EPDM, 3.0MM TH'K
G	100A	3EA	GASKET, KS 10K, RF, PTFE+EPDM, 3.0MM TH'K
G	50A	6EA	GASKET, KS 10K, RF, PTFE+EPDM, 3.0MM TH'K
G	40A	4EA	GASKET, KS 10K, RF, PTFE+EPDM, 3.0MM TH'K
G	25A	4EA	GASKET, KS 10K, RF, PTFE+EPDM, 3.0MM TH'K
B	125A	4SET	MACHINE BOLT & NUTS :STS 304 / W WASHERS
B	100A	3SET	MACHINE BOLT & NUTS :STS 304 / W WASHERS
B	50A	6SET	MACHINE BOLT & NUTS :STS 304 / W WASHERS
B	40A	4SET	MACHINE BOLT & NUTS :STS 304 / W WASHERS
B	25A	4SET	MACHINE BOLT & NUTS :STS 304 / W WASHERS
SQC	100A	3EA	QUICK COUPLING(FLANGE TYPE ADAPTOR), W / CAMLOCK
LOTO	100A	3EA	LOTO
SH	125A	4EA	SHIELD
SH	100A	6EA	SHIELD
SH	50A	4EA	SHIELD
SH	25A	4EA	SHIELD

<NOTE>
1. (*) FIELD ADJUST

* PIPE : P/P1 * 90° ELBOW : E90 * 45° ELBOW : E45 * TEE : T * RED.TEE : TR * STUB-IN : STU * REINFORCING PAD : RP * CON.RED : RC * ECC.RED : RE * CON.SWAGE : RCS/RCS1 * ECC.SWAGE : RES/RES1 * NIPPLE : NP/NP1/NP2 * CAP : CAP/CAP1 * PLUG : PLG * FULL COUPLING : FC * HALF COUPLING : HF/HF1
* STUB-IN : STU * SOCKET(HDPE/PVC) : SC * SADDLE(HDPE) : SD * FLANGE : F/F1 * GASKET : G/G1/G2 * BOLT & NUT : B/B1 * BLIND FLANGE : FB/FB1 * GATE VA. : VG/VG1/VG2 * BALL VA. : VB/VBLO/VB1/VB1LO/VB2/VB2LO * BUTTERFLY VA. : VF/VF4 * CHECK VA. : VC/VC1/VC2/VC3/VC4/VC5/VC6/VC7
* GLOBE VA. : VL/VL1/VL2 * DIAPHRAGM VA. : VD/VDLO * DAMPER : VP * QUICK COUPLING : SQC * FLEXIBLE JOINT(STEEL) : FLXB * FLEXIBLE JOINT(RUBBER) : FLXR * FLEXIBLE JOINT(STEEL_PTFE LINED) : FLXL * FLEXIBLE HOSE : FLXH * STEAM TRAP : ST * SPRAY NOZZLE : SPN * EMERGENCY SHOWER : SSH
* STRAINER(Y-TYPE) : YSTR * STRAINER(T-TYPE) : TSTR * STRAINER(BUCKET-TYPE) : BSTR * ANCHOR PLATE : STOP * BIRD SCREEN : BS * ISOLATION KIT : IK * UNLOADING BOX : UB * AIR TRAP : AT * LOTO : LOTO * SIGHT GLASS : SG * PRESSURE GAUGE : PG * SHILED : SH * SPECIAL BOLT & NUT : BL/BL1

CLIENT SK hynix

9

INSULATION	CODE	N	CONDITION	PRESS. (kg/cm2g)	TEMP. (°C)
	THICK.	–	DESIGN	1	60
			OPERATING	ATM	AMB

AREA W14
UNIT 5FA
REF. PLAN DWG. CJ-M15W14-PI-A30-050005-A
REF. P & ID CJ-M15W14-PR-A20-000142

REV. NO.	DATE	DESCRIPTION	BY	CHK	APP'D
0	25.01.24	APPROVED FOR CONSTRUCTION	황래종	안남후	박동영

CONTRACTOR SK ecoplant
PROJECT NAME M15X Ph4 Project
COMMODITY CAOH2
JOB NO. 22330D
LINE NO. 125A-CAOH2-ST3-N-6701
SH'T NO. 01 / 01
REV. 0

경고 : 본 도면은 SK HYNIX의 기업비밀 자료로서, 어떠한 경우에도 목적 외 사용, 복제, 제3자에게 공개, 누설 및 유출할 수 없으며, 회사는 유포자의 불법 사용으로 피해가 발생할 경우 유포자에게 민/형사상 책임을 요구할 수 있음.