DRAWING LIST FOR TEST PACKAGE

AIR-SV-552

PROJECT NO.: 22328D

PROJECT TITLE : M15X Ph2 Project

No	PKG No	UNIT	LINE NUMBER			P&ID		REMARK
			ISO DRAWING No	SHEET	REV	P&ID No	REV	
1	552	3FA	50A-AIR-SV-ST1-N-9523-01	1 OF 1	1	CJ-M15W13-PR-A20-000083	2	
2	552	3FA	25A-AIR-SV-ST1-N-9727-01	1 OF 1	1	CJ-M15W13-PR-A20-000083	2	
3	552	3FA	50A-AIR-SV-ST1-N-9901-01	1 OF 1	0	CJ-M15W14-PR-A20-000601	0A	
4	552	3FA	25A-AIR-SV-ST1-N-9728-01	1 OF 1	1	CJ-M15W13-PR-A20-000083	2	
5	552	3FA	25A-AIR-SV-ST1-N-9729-01	1 OF 1	1	CJ-M15W13-PR-A20-000083	2	
6	552	3FA	40A-AIR-SV-ST1-N-9533-02	2 OF 2	1	CJ-M15W14-PR-A20-000143	2A	
7	552	3FA	40A-AIR-SV-ST1-N-9533-01	1 OF 2	1	CJ-M15W14-PR-A20-000143	2A	

ITEM NO.		W14-T-CAOH2-4601 C
SERVICE		Ca(OH)2 STORAGE TANK
Q'TY		1
TYPE		VERTICAL & CYLINDRICAL
SIZE	ID x H m	3.6 x 5.0 (EH 4.2) 2A
CAPA.	m3	51 (EH 43) 2A
MAT'L		C.S + EPOXY

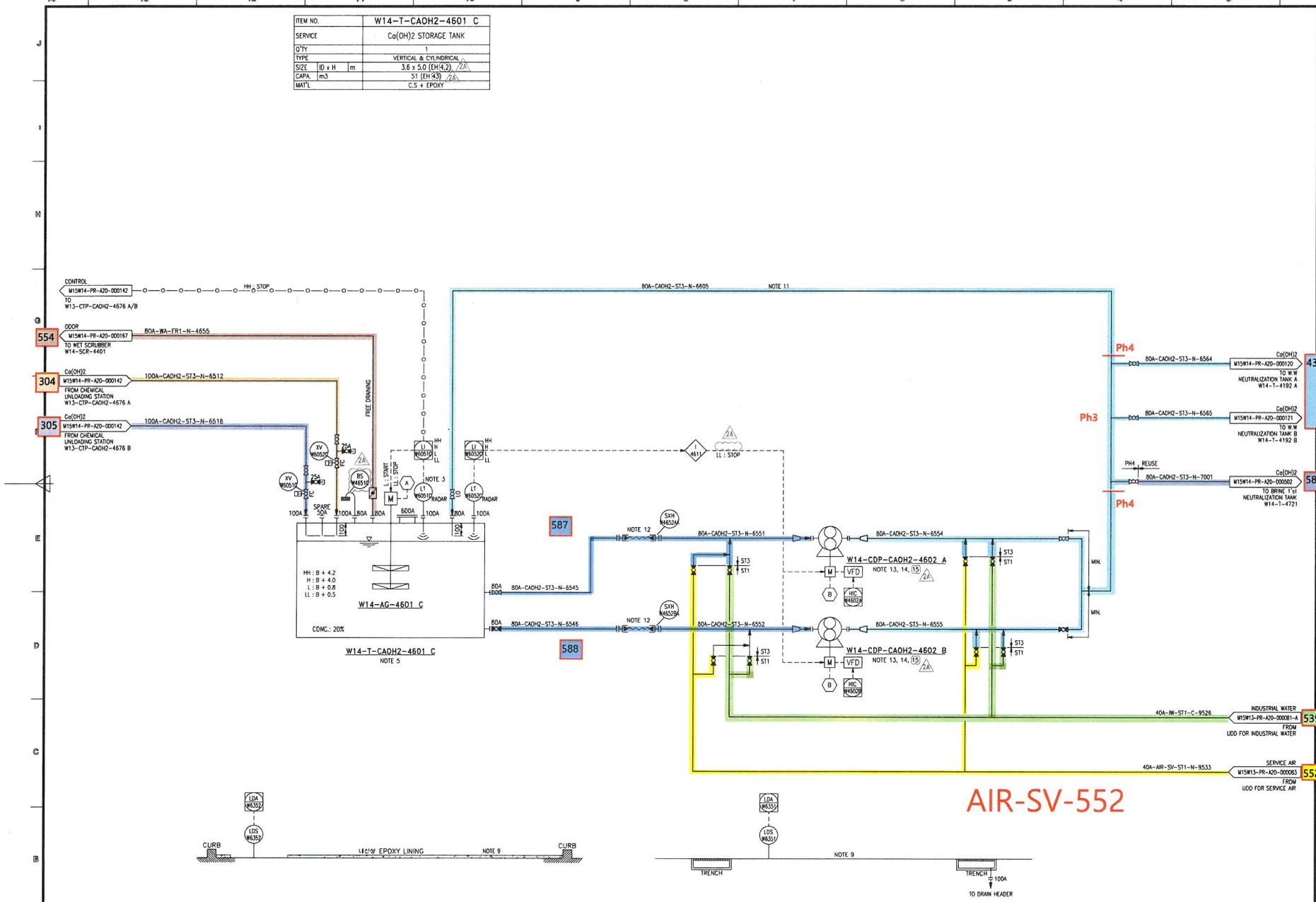

ITEM NO.		W14-AG-4601 C
SERVICE		Ca(OH)2 STORAGE TANK AGITATOR
Q'TY		1
TYPE		SAW PITCHED PADDLE
CAPA.	rpm	9.9 2A
MAT'L		STS304/STS304
POWER	kW	5.5 2A

ITEM NO.		W14-CDP-CAOH2-4602 A/B
SERVICE		Ca(OH)2 FEED PUMP
Q'TY		1 + 1
TYPE		ROTARY LOBE (VVF)
CAPA.	m3/h.ea x MPa	28 x 0.7
MAT'L		(NBR/GC250/SCM440)
POWER	kW	(15) 2A

대외비

KEY PLAN (3F)

NOTE

1. Ca(OH)2 배관의 ELBOW 부분은 FLANGE 설치할 것.
2. 2m 이상 높은 곳에 설치된 밸브는 CHAIN VALVE 또는 PLATFORM 구성할 것.
3. CHEMICAL UNLOADING STATION에서 LEVEL을 볼 수 있도록 한다.
4. P&ID에 표기된 모든 ELECTRIC POWER는 VENDOR PRINT 접수 후 확정됨.
5. 소석회 TANK 내 4개의 BAFFLE PLATE 를 설치함. 2A
6. 약품종류에 따라 LINE 색상을 구분하여야 한다.
7. 운전 시 CLOSE 되는 배관에는 LOTO 설치.
8. AGITATOR MAT'L 표기 : SHAFT/BLADE
9. CHEMICAL STORAGE TANK CURB 및 PUMP AREA에서 발생되는 DRAINAGE 한곳의 TRENCH로 집수되며, DRAIN HEADER로 이송된다.
10. INTERLOCK NO. I-4611 (W14-CDP-CAOH2-4602 A/B AUTO STOP) : REMOTE STATUS에서 W14-T-CAOH2-4601 C LEVEL (LI-W6052C) LOW LOW STOP.
11. RINGMAIN LINE SCHEMATIC.

SCHEMATIC DRAWING

12. 기계 VENDOR LOOSE PART 공급.
13. INTERNAL PSV 설치 할 것.
14. 소석회 주입 펌프 AREA에는 비산 방지막을 설치한다. 2A
15. INTERNAL PSV SET PRESSRUE : 0.8 Mpag 1A

REV.	정 정 사 항 DESCRIPTION	년 월 일 DATE
2A	REVISED AFC	25.08.14
2	REVISED AFC	25.01.17
1	REVISED AFC	24.10.31

제 도 DRAWN BY	이 인 학
검 도 CHECKED BY	한 진 희
승 인 APPROVED BY	박 동 영
제 작 사	SK 에코플랜트
공 사 명 PROJECT TITLE	M15X Ph4 WWT Project
도면명 DWG. TITLE	PIPING & INSTRUMENT DIAGRAM Ca(OH)2 STORAGE TANK & FEED PUMP (2/2)
축 척 SCALE	NONE
날 짜 DATE	2025. 08. 14
PROJECT NO.	22330D
도면번호 SHEET NO.	CJ-M15W14-PR-A20-000143
REV.	2A

A1(594x841mm ±2mm)

C:WUsersWTDPWDesktopWP&ID251013WM15X Ph 4 for 외부기관CAD FILE_0910WCJ-M15W14-PR-A20-000143 R2 P&ID FOR Ca(OH

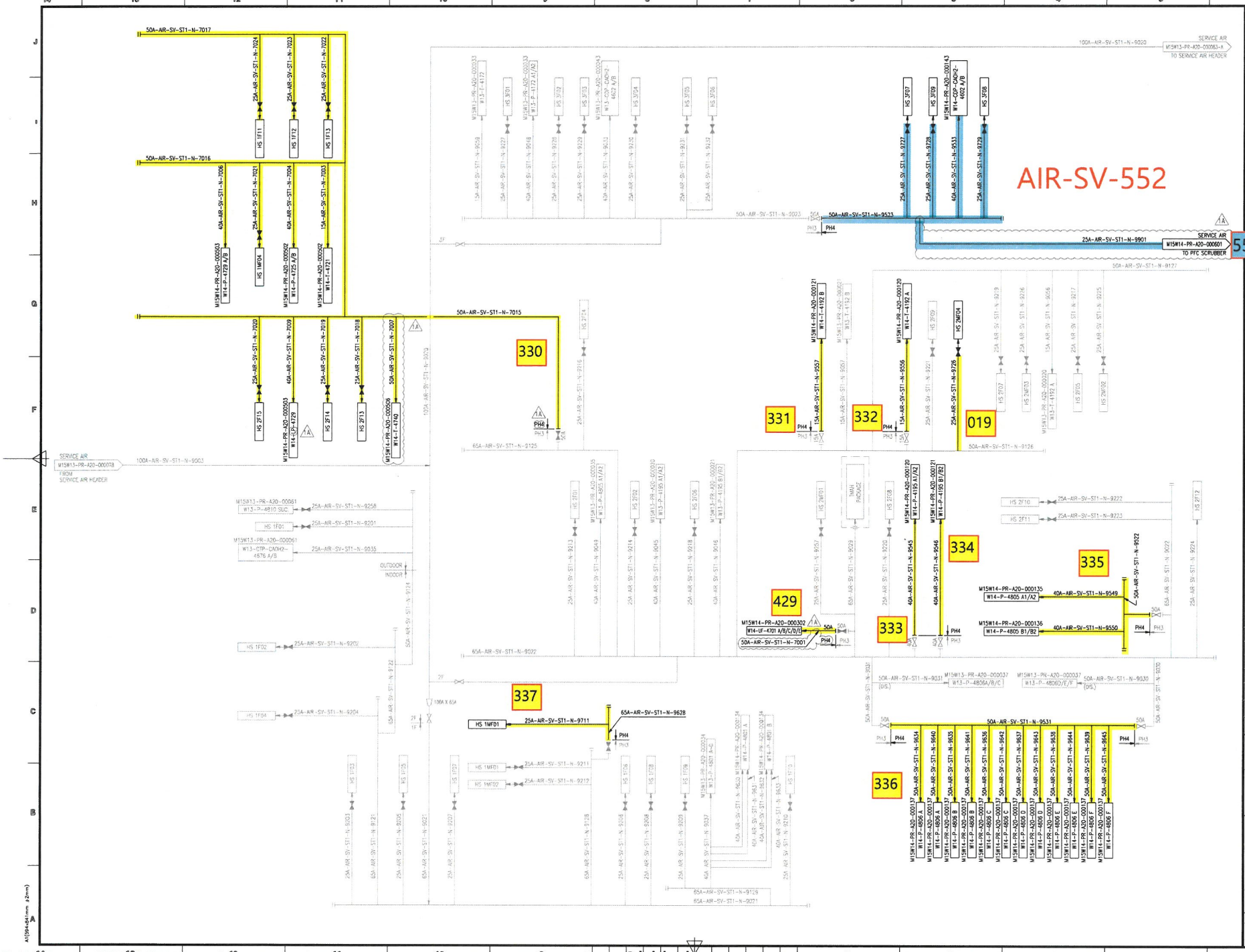

대외비

KEY PLAN

NOTE

REV.	DESCRIPTION	DATE
1A	REVISED AFC	25.08.14
1	REVISED AFC	25.01.17
0	APPROVAL FOR CONSTRUCTION	24.09.30

수정 REV.	설명 DESCRIPTION	날짜 DATE
1	REVISED AFC	24.06.21
0	APPROVAL FOR CONSTRUCTION	22.03.23

제 도 DRAWN BY	이 인 학
검 토 CHECKED BY	한 진 희
승 인 APPROVED BY	박 동 영
제 작 사	SK 에코플랜트
공 사 명 PROJECT TITLE	M15X Ph4 WWT Project
PROJECT NO.	22330D

제 도 DRAWN BY	허 진 희
검 토 CHECKED BY	심 정 훈
승 인 APPROVED BY	박 동 영
제 작 사	SK 에코플랜트
공 사 명 PROJECT TITLE	M15X Ph3 WWT Project
도면명 DWG. TITLE	UTILITY DISTRIBUTION DIAGRAM SERVICE AIR DISTRIBUTION SYSTEM (1/2)
축 척 SCALE	NONE
년 월 일 DATE	2024. 06. 21
PROJECT NO.	22330D
도면번호 SHEET NO.	CJ-M15W13-PR-A20-000083 REV. 2

A1(594x841mm ±2mm)

C:₩Users₩TODW₩Desktop₩P&ID251013₩M15X Ph 4 for 외부기관 CAD FILE 0910₩CJ-M15W13-PR-A20-000083 R1 UDD FOR SERVIC

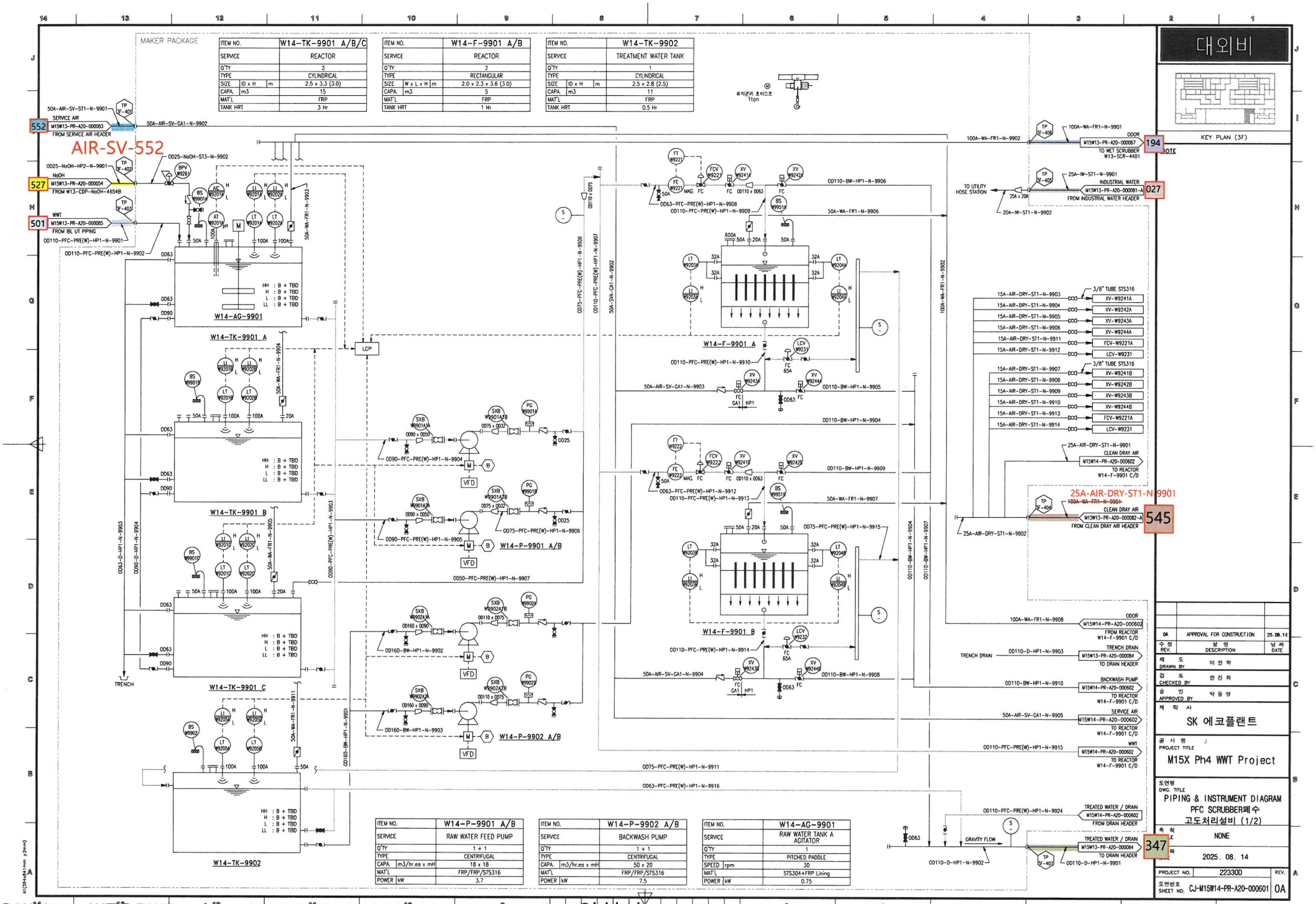

C:₩Users₩TOP₩Desktop₩P&ID251013₩[M15X Ph-4 for 인허가]CAD FILE_0910₩CJ-M15W14-PR-A20-000601 R0A PFC SCRUBBER

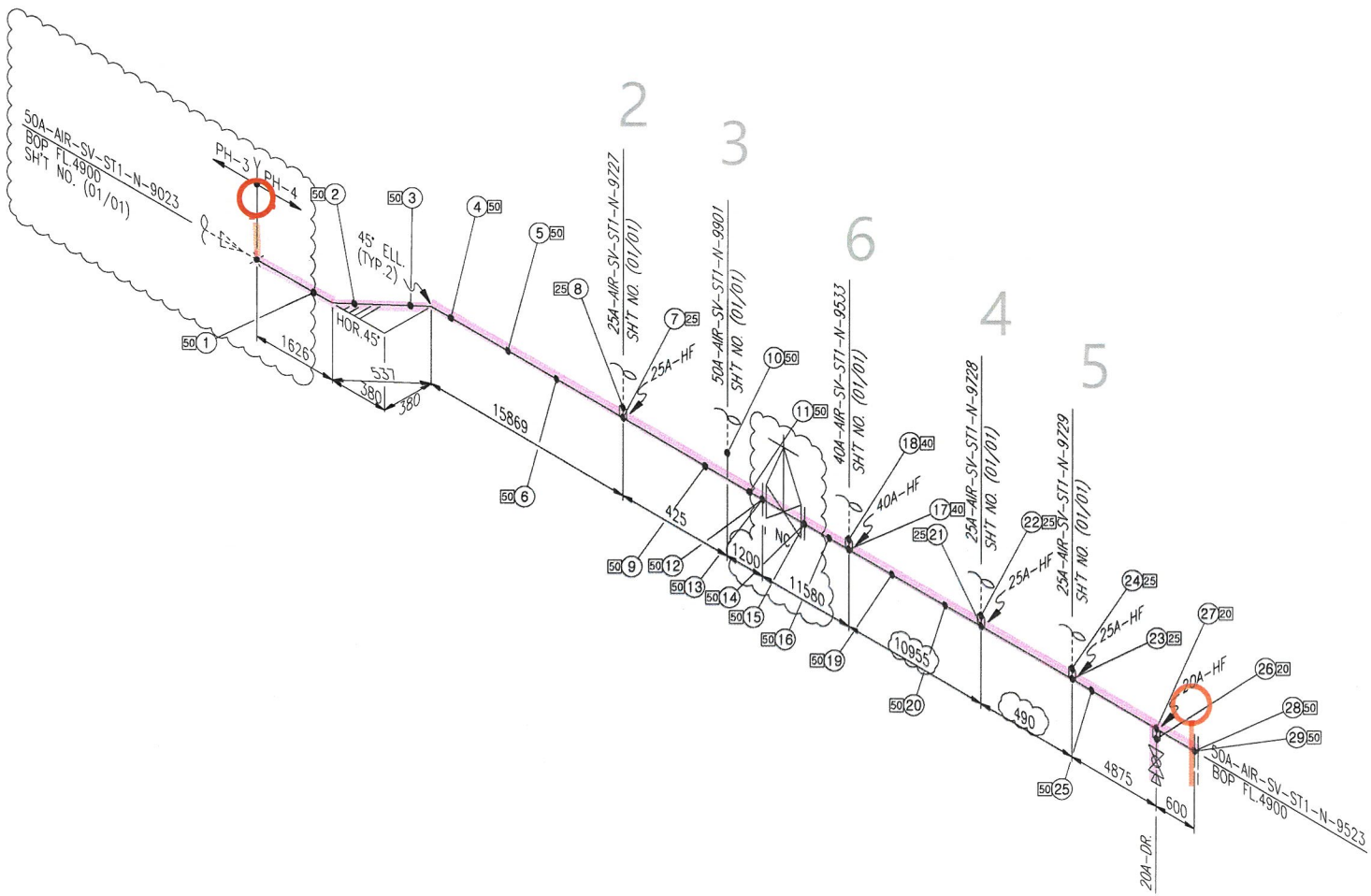

<NOTE>
1. (*) FIELD ADJUST

ITEM	SIZE	Q'TY	DESCRIPTION
		ST1	
P	50A	48.0M	PIPE, STS 304TP, ERW, BE - SCH 10S
NP1	20A	1EA	NIPPLE, STS 304TP, ERW, TOE - SCH 40S
HF	40A	1EA	COUPLING HALF, STSF304, SW - SCH 10S
HF	25A	3EA	COUPLING HALF, STSF304, SW - SCH 10S
HF	20A	1EA	COUPLING HALF, STSF304, SW - SCH 10S
PLG	20A	1EA	PLUG ROUND HEAD, STSF304, SCR'D
VB1	20A	1EA	BALL VALVE, KS 10K, SCR'D, BODY-STSF304 /
			TRIM-STS304 / SEAT-PTFE, FB, LEVER
F	50A	3EA	FLG SO, KS 10K, RF, STS304
FB	50A	1EA	FLG BLIND, KS 10K, RF, STS304
G	50A	3EA	GASKET, KS 10K, RF, PTFE+EPDM, 3.0MM TH'K
B	50A	3SET	MACHINE BOLT & NUTS :STS 304 / W WASHERS
T	50A	1EA	TEE EQUAL, STS304, ERW, BE - SCH 10S
E45	50A	2EA	ELBOW 45 DEG LR, STS316, ERW, BE - SCH 10S
VG	50A	1EA	GATE VALVE, KS 10K, RF FLG'D, BODY-SSC13 /
			TRIM-STS304, BB / OS&Y, HANDWHEEL
LOTO	50A	1EA	LOTO

* PIPE : P/P1 * 90° ELBOW : E90 * 45° ELBOW : E45 * TEE : T * RED.TEE : TR * STUB-IN : STU * REINFORCING PAD : RP * CON.RED : RC * ECC.RED : RE * CON.SWAGE : RCS/RCS1 * ECC.SWAGE : RES/RES1 * NIPPLE : NP/NP1/NP2 * CAP : CAP/CAP1 * PLUG : PLG * FULL COUPLING : FC * HALF COUPLING : HF/HF1
* STUB-IN : STU * SOCKET(HDPE/PVC) : SC * SADDLE(HDPE) : SD * FLANGE : F/F1 * GASKET : G/G1/G2 * BOLT & NUT : B/B1 * BLIND FLANGE : FB/FB1 * GATE VA. : VG/VG1/VG2 * BALL VA. : VB/VBLO/VB1/VB1LO/VB2/VB2LO * BUTTERFLY VA. : VF/VF4 * CHECK VA. : VC/VC1/VC2/VC3/VC4/VC5/VC6/VC7
* GLOBE VA. : VL/VL1/VL2 * DIAPHRAGM VA. : VD/VDLO * DAMPER : VP * QUICK COUPLING : SQC * FLEXIBLE JOINT(STEEL) : FLXB * FLEXIBLE JOINT(RUBBER) : FLXR * FLEXIBLE JOINT(STEEL PTFE LINED) : FLXL * FLEXIBLE HOSE : FLXH * STEAM TRAP : ST * SPRAY NOZZLE : SPN * EMERGENCY SHOWER : SSH
* STRAINER(Y-TYPE) : YSTR * STRAINER(T-TYPE) : TSTR * STRAINER(BUCKET-TYPE) : BSTR * ANCHOR PLATE : STOP * BIRD SCREEN : BS * ISOLATION KIT : IK * UNLOADING BOX : UB * AIR TRAP : AT * LOTO : LOTO * SIGHT GLASS : SG * PRESSURE GAUGE : PG * SHILED : SH * SPECIAL BOLT & NUT : BL/BL1

CLIENT SK hynix 1

INSULATION	CODE	N	CONDITION	PRESS. (kg/cm2g)	TEMP. (°C)
	THICK.	-	DESIGN	10	60
			OPERATING	5.0	AMB

AREA W14
UNIT 3FA
REF. PLAN DWG. CJ-M15W14-PI-A30-030007-C
REF. P & ID CJ-M15W13-PR-A20-000083

REV. NO.	DATE	DESCRIPTION	BY	CHK	APP'D
1	25.03.31	REVISED AS MARKED	황래중	안남후	박동영
0	25.01.24	APPROVED FOR CONSTRUCTION	황래중	안남후	박동영

CONTRACTOR SK ecoplant
COMMODITY AIR-SV
LINE NO. 50A-AIR-SV-ST1-N-9523
PROJECT NAME M15X Ph4 Project
JOB NO. 22330D
SH'T NO. 01 / 01
REV. 1

경고 : 본 도면은 SK HYNIX의 기업비밀 자료로서, 어떠한 경우에도 목적 외 사용, 복제, 제3자에게 공개, 누설 및 유출할 수 없으며, 회사는 유포자의 불법 사용으로 피해가 발생할 경우 유포자에게 민/형사상 책임을 요구할 수 있음.

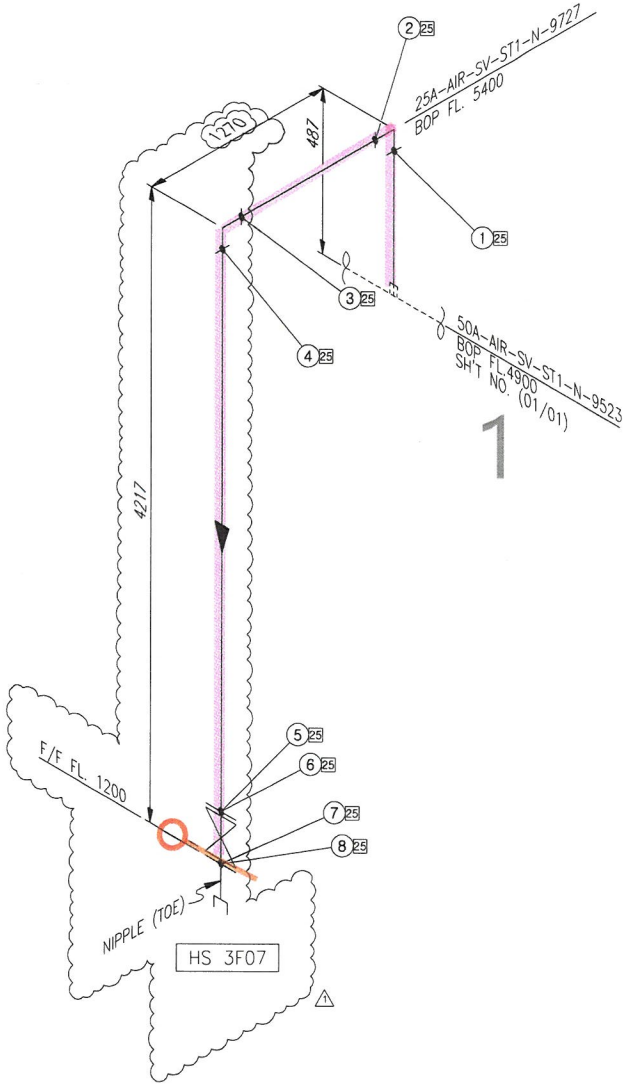

SK ecoplant

ITEM	SIZE	Q'TY	DESCRIPTION
		ST1	
P	25A	5.7M	PIPE, STS 304TP, ERW, PE - SCH 10S
NP1	25A	1EA	NIPPLE, STS 304TP, ERW, TOE - SCH 40S
E90	25A	2EA	ELBOW 90 DEG, STSF304, SW - SCH 10S
VG	25A	1EA	GATE VALVE, KS 10K, RF FLG'D, BODY-STSF304 /
			TRIM-STS304, BB / OS&Y, HANDWHEEL
F	25A	2EA	FLG SO, KS 10K, RF, STS304
G	25A	2EA	GASKET, KS 10K, RF, PTFE+EPDM, 3.0MM TH'K
B	25A	2SET	MACHINE BOLT & NUTS :STS 304 / W WASHERS
SQC	25A	1EA	QUICK COUPLING(MALE)

<NOTE>
1. (*) FIELD ADJUST

* PIPE : P/P1 * 90° ELBOW : E90 * 45° ELBOW : E45 * TEE : T * RED.TEE : TR * STUB-IN : STU * REINFORCING PAD : RP * CON.RED : RC * ECC.RED : RE * CON.SWAGE : RCS/RCS1 * ECC.SWAGE : RES/RES1 * NIPPLE : NP/NP1/NP2 * CAP : CAP/CAP1 * PLUG : PLG * FULL COUPLING : FC * HALF COUPLING : HF/HF1
* STUB-IN : STU * SOCKET(HDPE/PVC) : SC * SADDLE(HDPE) : SD * FLANGE : F/F1 * GASKET : G/G1/G2 * BOLT & NUT : B/B1 * BLIND FLANGE : FB/FB1 * GATE VA. : VG/VG1/VG2 * BALL VA : VB/VBL0/VB1/VB1L0/VB2/VB2L0 * BUTTERFLY VA : VF/VF4 * CHECK VA. : VC/VC1/VC2/VC3/VC4/VC5/VC6/VC7
* GLOBE VA. : VL/VL1/VL2 * DIAPHRAGM VA. : VD/VDL0 * DAMPER : VP * QUICK COUPLING : SQC * FLEXIBLE JOINT(STEEL) : FLXB * FLEXIBLE JOINT(RUBBER) : FLXR * FLEXIBLE JOINT(STEEL_PTFE LINED) : FLXL * FLEXIBLE HOSE : FLXH * STEAM TRAP : ST * SPRAY NOZZLE : SPN * EMERGENCY SHOWER : SSH
* STRAINER(Y-TYPE) : YSTR * STRAINER(T-TYPE) : TSTR * STRAINER(BUCKET-TYPE) : BSTR * ANCHOR PLATE : STOP * BIRD SCREEN : BS * ISOLATION KIT : IK * UNLOADING BOX : UB * AIR TRAP : AT * LOTO : LOTO * SIGHT GLASS : SG * PRESSURE GAUGE : PG * SHILED : SH * SPECIAL BOLT & NUT : BL/BL1

CLIENT
SK hynix 2

INSULATION	CODE	N	CONDITION	PRESS. (kg/cm2g)	TEMP. (°C)
	THICK.	-	DESIGN	10.0	60
			OPERATING	7.5	AMB

AREA W14
UNIT 3FA
REF. PLAN DWG. CJ-M15W14-PI-A30-030007-A
REF. P & ID CJ-M15W13-PR-A20-000083

REV. NO.	DATE	DESCRIPTION	BY	CHK	APP'D
1	25.03.31	REVISED AS MARKED	황래종	안남후	박동영
0	25.01.24	APPROVED FOR CONSTRUCTION	황래종	안남후	박동영

CONTRACTOR SK ecoplant
COMMODITY AIR-SV
LINE NO. 25A-AIR-SV-ST1-N-9727
PROJECT NAME M15X Ph4 Project
JOB NO. 22330D
SH'T NO. 01 / 01
REV. 1

경고 : 본 도면은 SK HYNIX의 기업비밀 자료로서, 어떠한 경우에도 목적 외 사용, 복제, 제3자에게 공개, 누설 및 유출할 수 없으며, 회사는 유포자의 불법 사용으로 피해가 발생할 경우 유포자에게 민/형사상 책임을 요구할 수 있음.

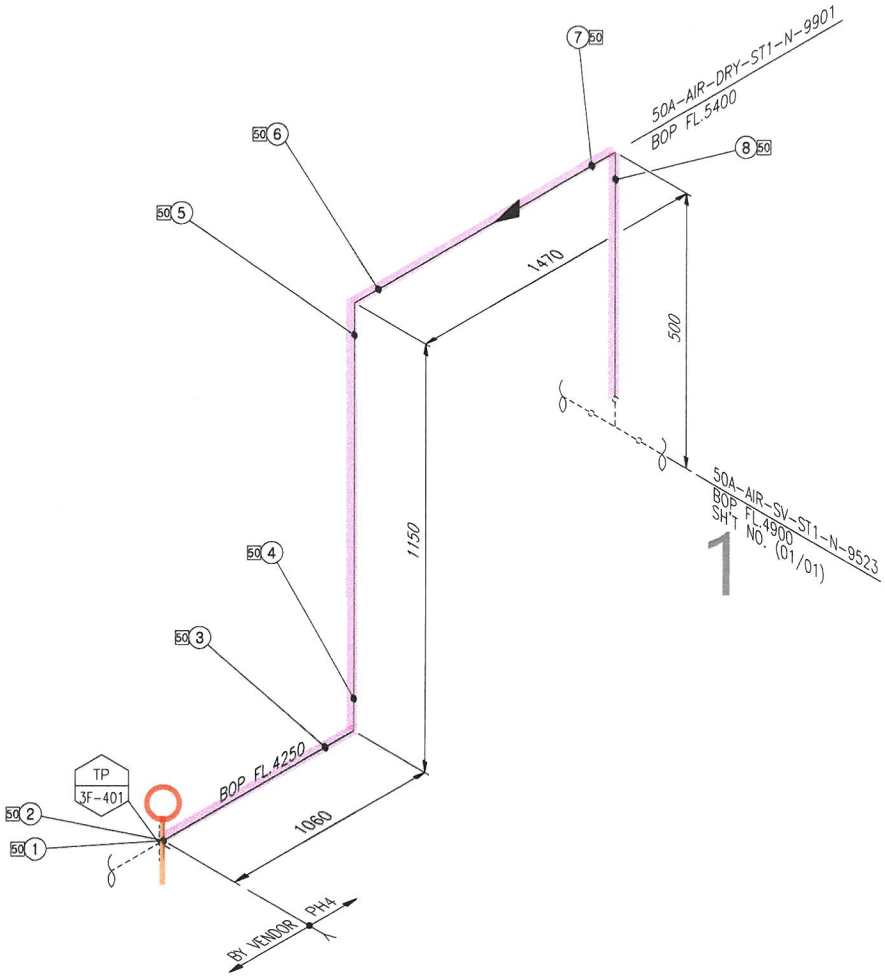

<NOTE>
1. (*) FIELD ADJUST

SK ecoplant

ITEM	SIZE	Q'TY	DESCRIPTION
		ST1	
P	50A	4.2M	PIPE, STS 304TP, ERW, BE - SCH 10S
E90	50A	3EA	ELBOW 90 DEG LR, STS304, ERW, BE - SCH 10S
F	50A	1EA	FLG SO, KS 10K, RF, STS304
G	50A	1EA	GASKET, KS 10K, RF, PTFE+EPDM, 3.0MM TH'K
B	50A	1SET	MACHINE BOLT & NUTS :STS 304 / W WASHERS

* PIPE : P/P1 * 90° ELBOW : E90 * 45° ELBOW : E45 * TEE : T * RED.TEE : TR * STUB-IN : STU * REINFORCING PAD : RP * CON.RED : RC * ECC.RED : RE * CON.SWAGE : RCS/RCS1 * ECC.SWAGE : RES/RES1 * NIPPLE : NP/NP1/NP2 * CAP : CAP/CAP1 * PLUG : PLG * FULL COUPLING : FC * HALF COUPLING : HF/HF1
* STUB-IN : STU * SOCKET(HDPE/PVC) : SC * SADDLE(HDPE) : SD * FLANGE : F/F1 * GASKET : G/G1/G2 * BOLT & NUT : B/B1 * BLIND FLANGE : FB/FB1 * GATE VA. : VG/VG1/VG2 * BALL VA. : VB/VBLO/VB1/VB1LO/VB2/VB2LO * BUTTERFLY VA. : VF/VF4 * CHECK VA. : VC/VC1/VC2/VC3/VC4/VC5/VC6/VC7
* GLOBE VA. : VL/VL1/VL2 * DIAPHRAGM VA. : VD/VDLO * DAMPER : VP * QUICK COUPLING : SQC * FLEXIBLE JOINT(STEEL) : FLXB * FLEXIBLE JOINT(RUBBER) : FLXR * FLEXIBLE JOINT(STEEL_PTFE LINED) : FLXL * FLEXIBLE HOSE : FLXH * STEAM TRAP : ST * SPRAY NOZZLE : SPN * EMERGENCY SHOWER : SSH
* STRAINER(Y-TYPE) : YSTR * STRAINER(T-TYPE) : TSTR * STRAINER(BUCKET-TYPE) : BSTR * ANCHOR PLATE : STOP * BIRD SCREEN : BS * ISOLATION KIT : IK * UNLOADING BOX : UB * AIR TRAP : AT * LOTO : LOTO * SIGHT GLASS : SG * PRESSURE GAUGE : PG * SHILED : SH * SPECIAL BOLT & NUT : BL/BL1

CLIENT
SK hynix 3

INSULATION	CODE	N	CONDITION	PRESS. (kg/cm2g)	TEMP. (°C)
	THICK.	-	DESIGN	10	60
			OPERATING	5.0	AMB

AREA W14
UNIT 3FA
REF. PLAN DWG. CJ-M15W14-PI-A30-030007-B
REF. P & ID CJ-M15W14-PR-A20-000601

REV. NO.	DATE	DESCRIPTION	BY	CHK	APP'D
0	25.03.31	APPROVED FOR CONSTRUCTION	황래종	안남후	박동영

CONTRACTOR SK ecoplant
PROJECT NAME M15X Ph4 Project
COMMODITY AIR-SV
JOB NO. 22330D
LINE NO. 50A-AIR-SV-ST1-N-9901
SH'T NO. 01 / 01
REV. 0

경고 : 본 도면은 SK HYNIX의 기업비밀 자료로서, 어떠한 경우에도 목적 외 사용, 복제, 제3자에게 공개, 누설 및 유출할 수 없으며, 회사는 유포자의 불법 사용으로 피해가 발생할 경우 유포자에게 민/형사상 책임을 요구할 수 있음.

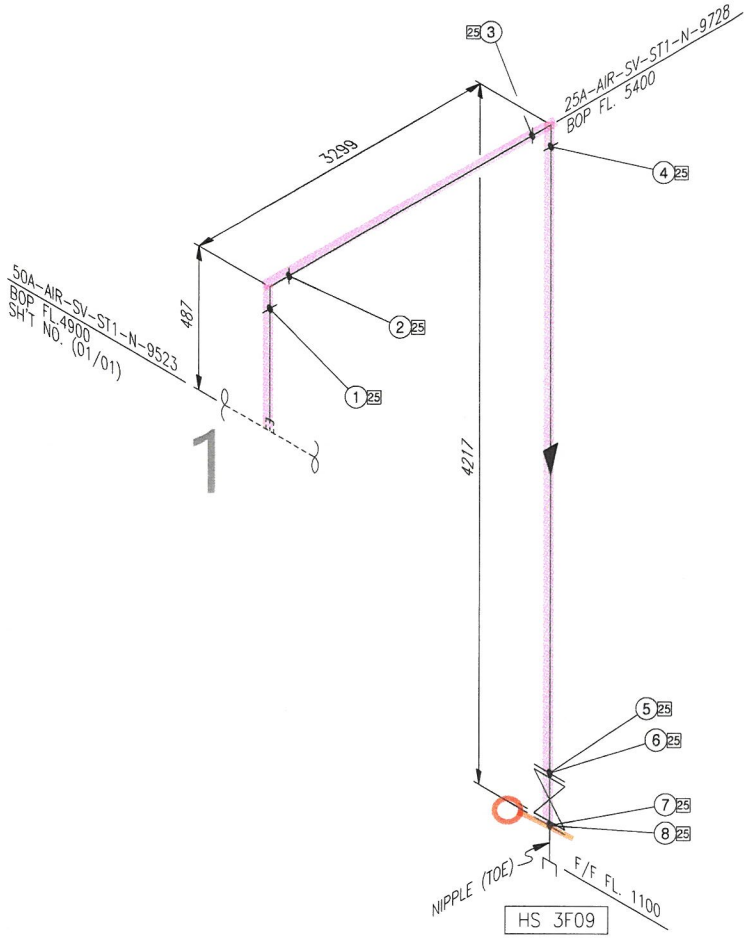

ITEM	SIZE	Q'TY	DESCRIPTION
		ST1	
P	25A	8.4M	PIPE, STS 304TP, ERW, PE – SCH 10S
NP1	25A	1EA	NIPPLE, STS 304TP, ERW, T0E – SCH 40S
E90	25A	2EA	ELBOW 90 DEG, STSF304, SW – SCH 10S
VG	25A	1EA	GATE VALVE, KS 10K, RF FLG'D, BODY–STSF304 /
			TRIM–STS304, BB / OS&Y, HANDWHEEL
F	25A	2EA	FLG SO, KS 10K, RF, STS304
G	25A	2EA	GASKET, KS 10K, RF, PTFE+EPDM, 3.0MM TH'K
B	25A	2SET	MACHINE BOLT & NUTS :STS 304 / W.WASHERS
SOC	25A	1EA	QUICK COUPLING(MALE)

<NOTE>
1. (*) FIELD ADJUST

* PIPE : P/P1 * 90° ELBOW : E90 * 45° ELBOW : E45 * TEE : T * RED.TEE : TR * STUB-IN : STU * REINFORCING PAD : RP * CON.RED : RC * ECC.RED : RE * CON.SWAGE : RCS/RCS1 * ECC.SWAGE : RES/RES1 * NIPPLE : NP/NP1/NP2 * CAP : CAP/CAP1 * PLUG : PLG * FULL COUPLING : FC * HALF COUPLING : HF/HF1
* STUB-IN : STU * SOCKET(HDPE/PVC) : SC * SADDLE(HDPE) : SD * FLANGE : F/F1 * GASKET : G/G1/G2 * BOLT & NUT : B/B1 * BLIND FLANGE : FB/FB1 * GATE VA. : VG/VG1/VG2 * BALL VA. : VB/VBL0/VB1/VB1L0/VB2/VB2L0 * BUTTERFLY VA. : VF/VF4 * CHECK VA. : VC/VC1/VC2/VC3/VC4/VC5/VC6/VC7
* GLOBE VA. : VL/VL1/VL2 * DIAPHRAGM VA. : VD/VDL0 * DAMPER : VP * QUICK COUPLING : SOC * FLEXIBLE JOINT(STEEL) : FLXB * FLEXIBLE JOINT(RUBBER) : FLXR * FLEXIBLE JOINT(STEEL PTFE LINED) : FLXL * FLEXIBLE HOSE : FLXH * STEAM TRAP : ST * SPRAY NOZZLE : SPN * EMERGENCY SHOWER : SSH
* STRAINER(Y-TYPE) : YSTR * STRAINER(T-TYPE) : TSTR * STRAINER(BUCKET-TYPE) : BSTR * ANCHOR PLATE : STOP * BIRD SCREEN : BS * ISOLATION KIT : IK * UNLOADING BOX : UB * AIR TRAP : AT * LOTO : LOTO * SIGHT GLASS : SG * PRESSURE GAUGE : PG * SHILED : SH * SPECIAL BOLT & NUT : BL/BL1

INSULATION	CODE	N	CONDITION	PRESS. (kg/cm2g)	TEMP. (°C)
	THICK.	–	DESIGN	10.0	60
			OPERATING	7.5	AMB

AREA W14
UNIT 3FA
REF. PLAN DWG. CJ-M15W14-PI-A30-030007-A
REF. P & ID CJ-M15W13-PR-A20-000083

REV. NO.	DATE	DESCRIPTION	BY	CHK	APP'D
1	25.03.31	REVISED AS MARKED	황래중	안남후	박동영
0	25.01.24	APPROVED FOR CONSTRUCTION	황래중	안남후	박동영

CLIENT SK hynix
CONTRACTOR SK ecoplant
PROJECT NAME M15X Ph4 Project
COMMODITY AIR–SV
JOB NO. 22330D
LINE NO. 25A–AIR–SV–ST1–N–9728
SH'T NO. 01 / 01
REV. 1

경고 : 본 도면은 SK HYNIX의 기업비밀 자료로서, 어떠한 경우에도 목적 외 사용, 복제, 제3자에게 공개, 누설 및 유출할 수 없으며, 회사는 유포자의 불법 사용으로 피해가 발생할 경우 유포자에게 민/형사상 책임을 요구할 수 있음.

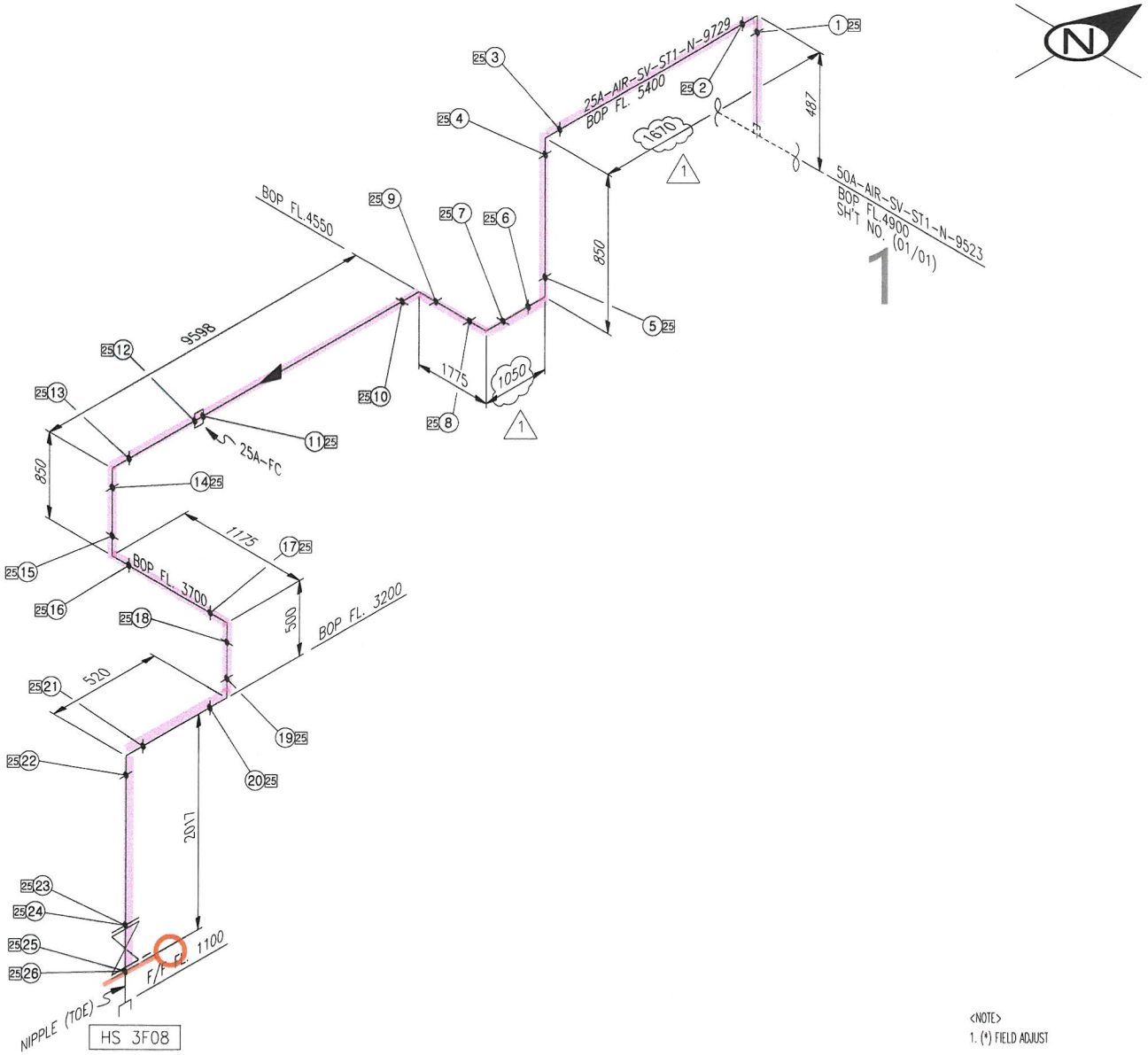

<NOTE>
1. (*) FIELD ADJUST

SK ecoplant

ITEM	SIZE	Q'TY	DESCRIPTION
		ST1	
P	25A	20.1M	PIPE, STS 304TP, ERW, PE - SCH 10S
NP1	25A	1EA	NIPPLE, STS 304TP, ERW, TOE - SCH 40S
E90	25A	10EA	ELBOW 90 DEG, STSF304, SW - SCH 10S
VG	25A	1EA	GATE VALVE, KS 10K, RF FLG'D, BODY-STSF304 /
			TRIM-STS304, BB / OS&Y, HANDWHEEL
F	25A	2EA	FLG SO, KS 10K, RF, STS304
G	25A	2EA	GASKET, KS 10K, RF, PTFE+EPDM, 3.0MM TH'K
B	25A	2SET	MACHINE BOLT & NUTS :STS 304 / W WASHERS
FC	25A	1EA	COUPLING FULL, STSF304, SW - SCH 10S
SQC	25A	1EA	QUICK COUPLING(MALE)

* PIPE : P/P1 * 90° ELBOW : E90 * 45° ELBOW : E45 * TEE : T * RED.TEE : TR * STUB-IN : STU * REINFORCING PAD : RP * CON.RED : RC * ECC.RED : RE * CON.SWAGE : RCS/RCS1 * ECC.SWAGE : RES/RES1 * NIPPLE : NP/NP1/NP2 * CAP : CAP/CAP1 * PLUG : PLG * FULL COUPLING : FC * HALF COUPLING : HF/HF1
* STUB-IN : STU * SOCKET(HDPE/PVC) : SC * SADDLE(HDPE) : SD * FLANGE : F/F1 * GASKET : G/G1/G2 * BOLT & NUT : B/B1 * BLIND FLANGE : FB/FB1 * GATE VA. : VG/VG1/VG2 * BALL VA. : VB/VBL0/VB1/VB1L0/VB2/VB2L0 * BUTTERFLY VA. : VF/VF4 * CHECK VA. : VC/VC1/VC2/VC3/VC4/VC5/VC6/VC7
* GLOBE VA. : VL/VL1/VL2 * DIAPHRAGM VA. : VD/VDL0 * DAMPER : VP * QUICK COUPLING : SQC * FLEXIBLE JOINT(STEEL) : FLXB * FLEXIBLE JOINT(RUBBER) : FLXR * FLEXIBLE JOINT(STEEL PTFE LINED) : FLXL * FLEXIBLE HOSE : FLXH * STEAM TRAP : ST * SPRAY NOZZLE : SPN * EMERGENCY SHOWER : SSH
* STRAINER(Y-TYPE) : YSTR * STRAINER(T-TYPE) : TSTR * STRAINER(BUCKET-TYPE) : BSTR * ANCHOR PLATE : STOP * BIRD SCREEN : BS * ISOLATION KIT : IK * UNLOADING BOX : UB * AIR TRAP : AT * LOTO : LOTO * SIGHT GLASS : SG * PRESSURE GAUGE : PG * SHILED : SH * SPECIAL BOLT & NUT : BL/BL1

CLIENT SK hynix 5

INSULATION	CODE	N
	THICK.	-

CONDITION	PRESS. (kg/cm2g)	TEMP. (°C)
DESIGN	10.0	60
OPERATING	7.5	AMB

AREA W14
UNIT 3FA
REF. PLAN DWG. CJ-M15W14-PI-A30-030007-A
REF. P & ID CJ-M15W13-PR-A20-000083

REV. NO.	DATE	DESCRIPTION	BY	CHK	APP'D
1	25.03.31	REVISED AS MARKED	황래종	안남후	박동영
0	25.01.24	APPROVED FOR CONSTRUCTION	황래종	안남후	박동영

CONTRACTOR SK ecoplant
PROJECT NAME M15X Ph4 Project
COMMODITY AIR-SV
JOB NO. 22330D
LINE NO. 25A-AIR-SV-ST1-N-9729
SH'T NO. 01 / 01
REV. 1

경고 : 본 도면은 SK HYNIX의 기업비밀 자료로서, 어떠한 경우에도 목적 외 사용, 복제, 제3자에게 공개, 누설 및 유출할 수 없으며, 회사는 유포자의 불법 사용으로 피해가 발생할 경우 유포자에게 민/형사상 책임을 요구할 수 있음.

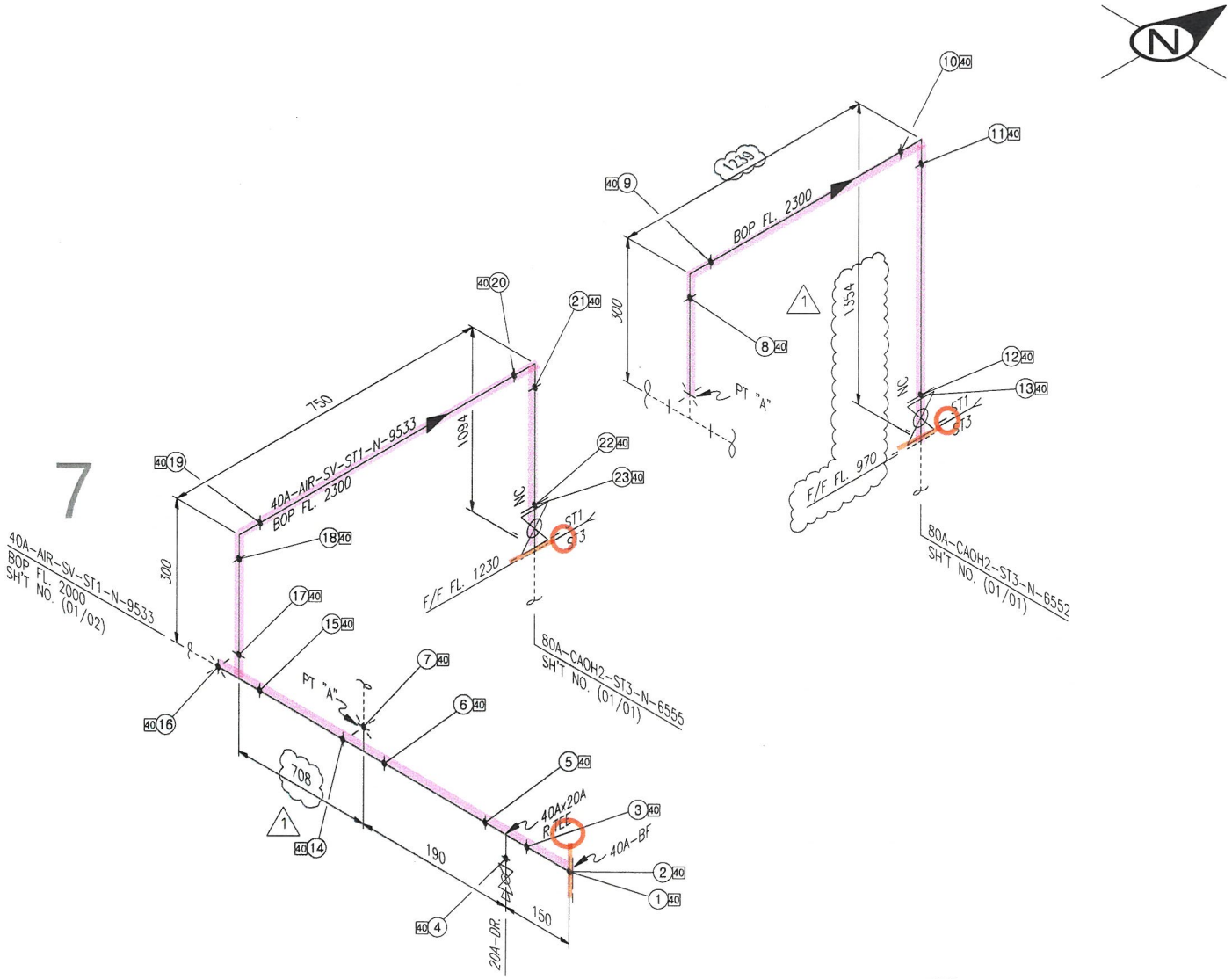

7

<NOTE>

1. (*) FIELD ADJUST

ITEM	SIZE	Q'TY	DESCRIPTION
		ST1	
P	40A	6.0M	PIPE, STS 304TP, ERW, PE - SCH 10S
E90	40A	4EA	ELBOW 90 DEG, STSF304, SW - SCH 10S
T	40A	2EA	TEE EQUAL, STSF304, SW - SCH 10S
TR	40Ax20A	1EA	TEE RED, STSF304, SW - SCH 10S
NP1	20A	1EA	NIPPLE, STS 304TP, ERW, TOE - SCH 40S
PLG	20A	1EA	PLUG ROUND HEAD, STSF304, SCR'D
F	40A	3EA	FLG SO, KS 10K, RF, STS304
FB	40A	1EA	FLG BLIND, KS 10K, RF, STS304
G	40A	5EA	GASKET, KS 10K, RF, PTFE+EPDM, 3.0MM TH'K
B	40A	4SET	MACHINE BOLT & NUTS :STS 304 / W WASHERS
VB	40A	2EA	BALL VALVE, KS 10K, RF FLG'D, BODY-STSF304 /
			TRIM-STS304 / SEAT-PTFE, FB, LEVER
VB1	20A	1EA	BALL VALVE, KS 10K, SCR'D, BODY-STSF304 /
			TRIM-STS304 / SEAT-PTFE, FB, LEVER
LOTO	40A	2EA	LOTO

* PIPE : P/P1 * 90° ELBOW : E90 * 45° ELBOW : E45 * TEE : T * RED.TEE : TR * STUB-IN : STU * REINFORCING PAD : RP * CON.RED : RC * ECC.RED : RE * CON.SWAGE : RCS/RCS1 * ECC.SWAGE : RES/RES1 * NIPPLE : NP/NP1/NP2 * CAP : CAP/CAP1 * PLUG : PLG * FULL COUPLING : FC * HALF COUPLING : HF/HF1
* STUB-IN : STU * SOCKET(HDPE/PVC) : SC * SADDLE(HDPE) : SD * FLANGE : F/F1 * GASKET : G/G1/G2 * BOLT & NUT : B/B1 * BLIND FLANGE : FB/FB1 * GATE VA. : VG/VG1/VG2 * BALL VA. : VB/VBLO/VB1/VB1LO/VB2/VB2LO * BUTTERFLY VA. : VF/VF4 * CHECK VA. : VC/VC1/VC2/VC3/VC4/VC5/VC6/VC7
* GLOBE VA. : VL/VL1/VL2 * DIAPHRAGM VA. : VD/VDLO * DAMPER : VP * QUICK COUPLING : SQC * FLEXIBLE JOINT(STEEL) : FLXB * FLEXIBLE JOINT(RUBBER) : FLXR * FLEXIBLE JOINT(STEEL PTFE LINED) : FLXL * FLEXIBLE HOSE : FLXH * STEAM TRAP : ST * SPRAY NOZZLE : SPN * EMERGENCY SHOWER : SSH
* STRAINER(Y-TYPE) : YSTR * STRAINER(T-TYPE) : TSTR * STRAINER(BUCKET-TYPE) : BSTR * ANCHOR PLATE : STOP * BIRD SCREEN : BS * ISOLATION KIT : IK * UNLOADING BOX : UB * AIR TRAP : AT * LOTO : LOTO * SIGHT GLASS : SG * PRESSURE GAUGE : PG * SHILED : SH * SPECIAL BOLT & NUT : BL/BL1

CLIENT SK hynix

6

INSULATION	CODE	N	CONDITION	PRESS. (kg/cm2g)	TEMP. (°C)
	THICK.	-	DESIGN	10.0	60
			OPERATING	5.0	AMB

AREA W14
UNIT 3FA
REF. PLAN DWG. CJ-M15W14-PI-A30-030008-A
REF. P & ID CJ-M15W14-PR-A20-000143

REV. NO.	DATE	DESCRIPTION	BY	CHK	APP'D
1	25.03.31	REVISED AS MARKED	황래중	안남후	박동영
0	25.01.24	APPROVED FOR CONSTRUCTION	황래중	안남후	박동영

CONTRACTOR SK ecoplant
COMMODITY AIR-SV
LINE NO. 40A-AIR-SV-ST1-N-9533
PROJECT NAME M15X Ph4 Project
JOB NO. 22330D
SH'T NO. 02 / 02
REV. 1

경고 : 본 도면은 SK HYNIX의 기업비밀 자료로서, 어떠한 경우에도 목적 외 사용, 복제, 제3자에게 공개, 누설 및 유출할 수 없으며, 회사는 유포자의 불법 사용으로 피해가 발생할 경우 유포자에게 민/형사상 책임을 요구할 수 있음.

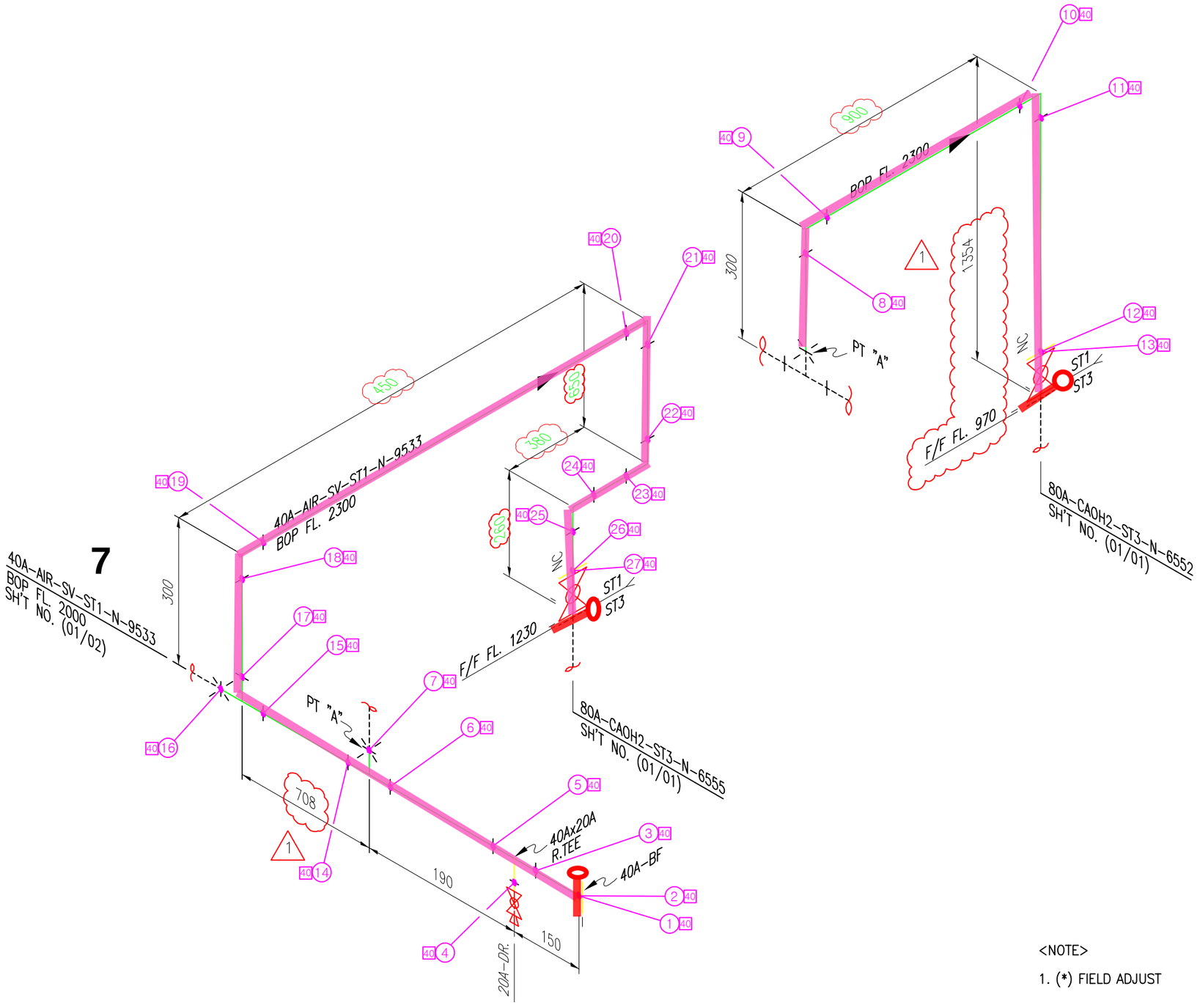

<NOTE>

1. (*) FIELD ADJUST

ITEM	SIZE	Q'TY	DESCRIPTION
		ST1	
P	40A	6.0M	PIPE, STS 304TP, ERW, PE – SCH 10S
E90	40A	6EA	ELBOW 90 DEG, STSF304, SW – SCH 10S
T	40A	2EA	TEE EQUAL, STSF304, SW – SCH 10S
TR	40Ax20A	1EA	TEE RED, STSF304, SW – SCH 10S
NP1	20A	1EA	NIPPLE, STS 304TP, ERW, TOE – SCH 40S
PLG	20A	1EA	PLUG ROUND HEAD, STSF304, SCR'D
F	40A	3EA	FLG SO, KS 10K, RF, STS304
FB	40A	1EA	FLG BLIND, KS 10K, RF, STS304
G	40A	5EA	GASKET, KS 10K, RF, PTFE+EPDM, 3.0MM TH'K
B	40A	4SET	MACHINE BOLT & NUTS :STS 304 / W WASHERS
VB	40A	2EA	BALL VALVE, KS 10K, RF FLG'D, BODY–STSF304 /
			TRIM–STS304 / SEAT–PTFE, FB, LEVER
VB1	20A	1EA	BALL VALVE, KS 10K, SCR'D, BODY–STSF304 /
			TRIM–STS304 / SEAT–PTFE, FB, LEVER
LOTO	40A	2EA	LOTO

* PIPE : P/P1 * 90° ELBOW : E90 * 45° ELBOW : E45 * TEE : T * RED.TEE : TR * STUB-IN : STU * REINFORCING PAD : RP * CON.RED : RC * ECC.RED : RE * CON.SWAGE : RCS/RCS1 * ECC.SWAGE : RES/RES1 * NIPPLE : NP/NP1/NP2 * CAP : CAP/CAP1 * PLUG : PLG * FULL COUPLING : FC * HALF COUPLING : HF/HF1
* STUB-IN : STU * SOCKET(HDPE/PVC) : SC * SADDLE(HDPE) : SD * FLANGE : F/F1 * GASKET : G/G1/G2 * BOLT & NUT : B/B1 * BLIND FLANGE : FB/FB1 * GATE VA. : VG/VG1/VG2 * BALL VA. : VB/VBL0/VB1/VB1L0/VB2/VB2L0 * BUTTERFLY VA. : VF/VF4 * CHECK VA. : VC/VC1/VC2/VC3/VC4/VC5/VC6/VC7
* GLOBE VA. : VL/VL1/VL2 * DIAPHRAGM VA. : VD/VDL0 * DAMPER : VP * QUICK COUPLING : SQC * FLEXIBLE JOINT(STEEL) : FLXB * FLEXIBLE JOINT(RUBBER) : FLXR * FLEXIBLE JOINT(STEEL_PTFE LINED) : FLXL * FLEXIBLE HOSE : FLXH * STEAM TRAP : ST * SPRAY NOZZLE : SPN * EMERGENCY SHOWER : SSH
* STRAINER(Y-TYPE) : YSTR * STRAINER(T-TYPE) : TSTR * STRAINER(BUCKET-TYPE) : BSTR * ANCHOR PLATE : STOP * BIRD SCREEN : BS * ISOLATION KIT : IK * UNLOADING BOX : UB * AIR TRAP : AT * LOTO : LOTO * SIGHT GLASS : SG * PRESSURE GAUGE : PG * SHILED : SH * SPECIAL BOLT & NUT : BL/BL1

CLIENT: SK hynix

6

INSULATION	CODE	N	CONDITION	PRESS. (kg/cm2g)	TEMP. (°C)	AREA	W14
	THICK.	–	DESIGN	10.0	60	UNIT	3FA
			OPERATING	5.0	AMB	REF. PLAN DWG.	CJ–M15W14–PI–A30–030008–A
						REF. P. & ID	CJ–M15W14–PR–A20–000143

REV. NO.	DATE	DESCRIPTION	BY	CHK	APP'D
1	25.03.31	REVISED AS MARKED	황래종	안남후	박동영
0	25.01.24	APPROVED FOR CONSTRUCTION	황래종	안남후	박동영

CONTRACTOR: SK ecoplant

PROJECT NAME: M15X Ph4 Project

COMMODITY: AIR–SV

JOB NO.: 22330D

LINE NO.: 40A–AIR–SV–ST1–N–9533

SH'T NO.: 02 / 02

REV.: 1

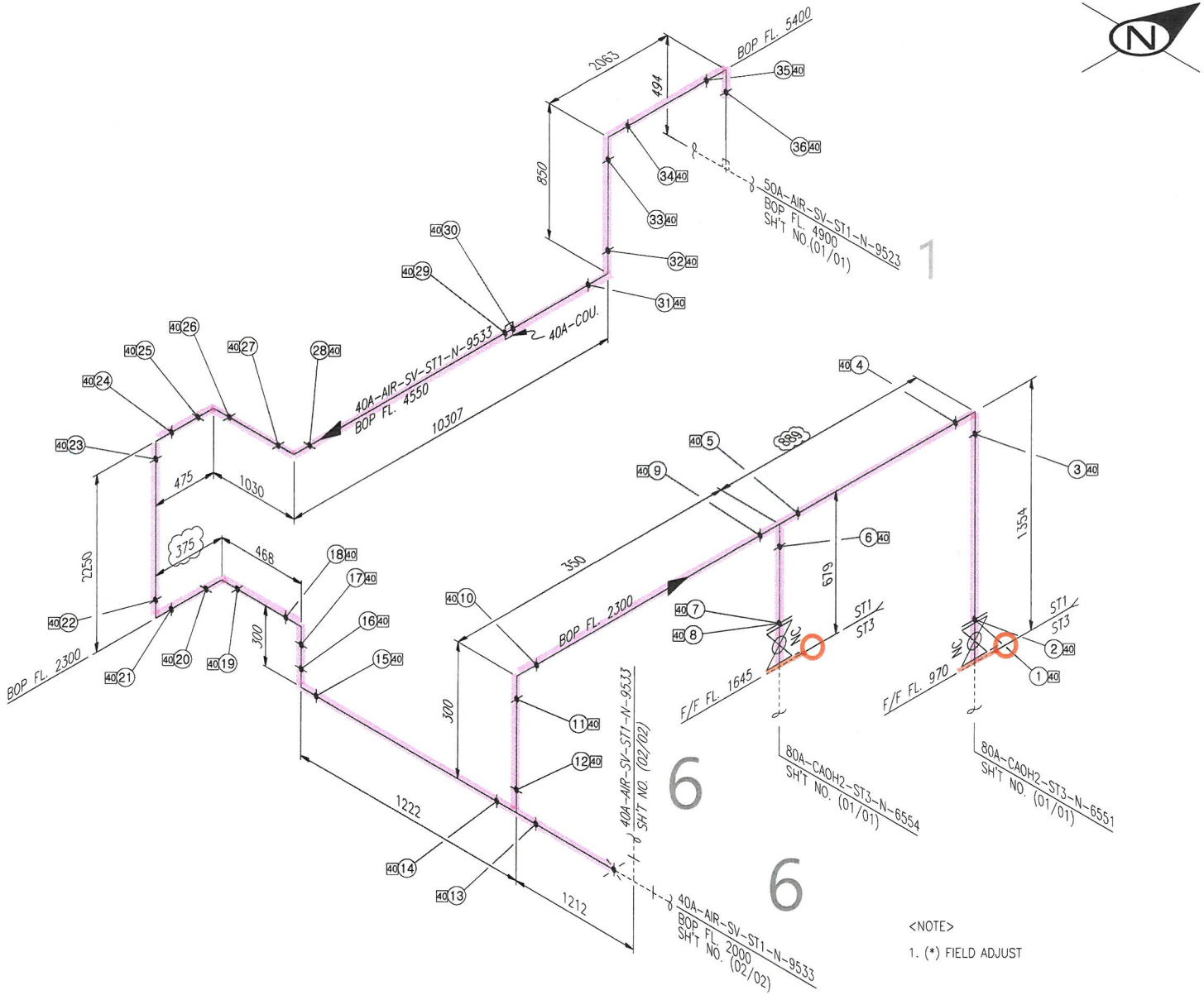

<NOTE>

1. (*) FIELD ADJUST

SK ecoplant

ITEM	SIZE	Q'TY	DESCRIPTION
		ST1	
P	40A	24.0M	PIPE, STS 304TP, ERW, PE – SCH 10S
E90	40A	12EA	ELBOW 90 DEG, STSF304, SW – SCH 10S
T	40A	2EA	TEE EQUAL, STSF304, SW – SCH 10S
FC	40A	1EA	COUPLING FULL, STSF304, SW – SCH 10S
F	40A	2EA	FLG SO, KS 10K, RF, STS304
G	40A	4EA	GASKET, KS 10K, RF, PTFE+EPDM, 3.0MM TH'K
B	40A	4SET	MACHINE BOLT & NUTS :STS 304 / W WASHERS
VB	40A	2EA	BALL VALVE, KS 10K, RF FLG'D, BODY-STSF304 /
			TRIM-STS304 / SEAT-PTFE, FB, LEVER
IN	25tX40A	24.0M	관 보온재(고무발포)
LOTO	40A	2EA	LOTO

* PIPE : P/P1 * 90' ELBOW : E90 * 45' ELBOW : E45 * TEE : T * RED.TEE : TR * STUB-IN : STU * REINFORCING PAD : RP * CON.RED : RC * ECC.RED : RE * CON.SWAGE : RCS/RCS1 * ECC.SWAGE : RES/RES1 * NIPPLE : NP/NP1/NP2 * CAP : CAP/CAP1 * PLUG : PLG * FULL COUPLING : FC * HALF COUPLING : HF/HF1
* STUB-IN : STU * SOCKET(HDPE/PVC) : SC * SADDLE(HDPE) : SD * FLANGE : F/F1 * GASKET : G/G1/G2 * BOLT & NUT : B/B1 * BLIND FLANGE : FB/FB1 * GATE VA. : VG/VG1/VG2 * BALL VA. : VB/VBLO/VB1/VB1LO/VB2/VB2LO * BUTTERFLY VA. : VF/VF4 * CHECK VA. : VC/VC1/VC2/VC3/VC4/VC5/VC6/VC7
* GLOBE VA. : VL/VL1/VL2 * DIAPHRAGM VA. : VD/VDLO * DAMPER : VP * QUICK COUPLING : SQC * FLEXIBLE JOINT(STEEL) : FLXB * FLEXIBLE JOINT(RUBBER) : FLXR * FLEXIBLE JOINT(STEEL_PTFE LINED) : FLXL * FLEXIBLE HOSE : FLXH * STEAM TRAP : ST * SPRAY NOZZLE : SPN * EMERGENCY SHOWER : SSH
* STRAINER(Y-TYPE) : YSTR * STRAINER(T-TYPE) : TSTR * STRAINER(BUCKET-TYPE) : BSTR * ANCHOR PLATE : STOP * BIRD SCREEN : BS * ISOLATION KIT : IK * UNLOADING BOX : UB * AIR TRAP : AT * LOTO : LOTO * SIGHT GLASS : SG * PRESSURE GAUGE : PG * SHILED : SH * SPECIAL BOLT & NUT : BL/BL1

CLIENT

SK hynix 7

INSULATION	CODE	N	CONDITION	PRESS. (kg/cm2g)	TEMP. (°C)
	THICK.	–	DESIGN	10.0	60
			OPERATING	5.0	AMB

AREA W14

UNIT 3FA

REF. PLAN DWG. CJ-M15W14-PI-A30-030008-A

REF. P & ID CJ-M15W14-PR-A20-000143

REV. NO.	DATE	DESCRIPTION	BY	CHK	APP'D
1	25.03.31	REVISED AS MARKED	황래종	안남후	박동영
0	25.01.24	APPROVED FOR CONSTRUCTION	황래종	안남후	박동영

CONTRACTOR SK ecoplant

COMMODITY AIR-SV

LINE NO. 40A-AIR-SV-ST1-N-9533

PROJECT NAME M15X Ph4 Project

JOB NO. 22330D

SH'T NO. 01 / 02

REV. 1

경고 : 본 도면은 SK HYNIX의 기업비밀 자료로서, 어떠한 경우에도 목적 외 사용, 복제, 제3자에게 공개, 누설 및 유출할 수 없으며, 회사는 유포자의 불법 사용으로 피해가 발생할 경우 유포자에게 민/형사상 책임을 요구할 수 있음.

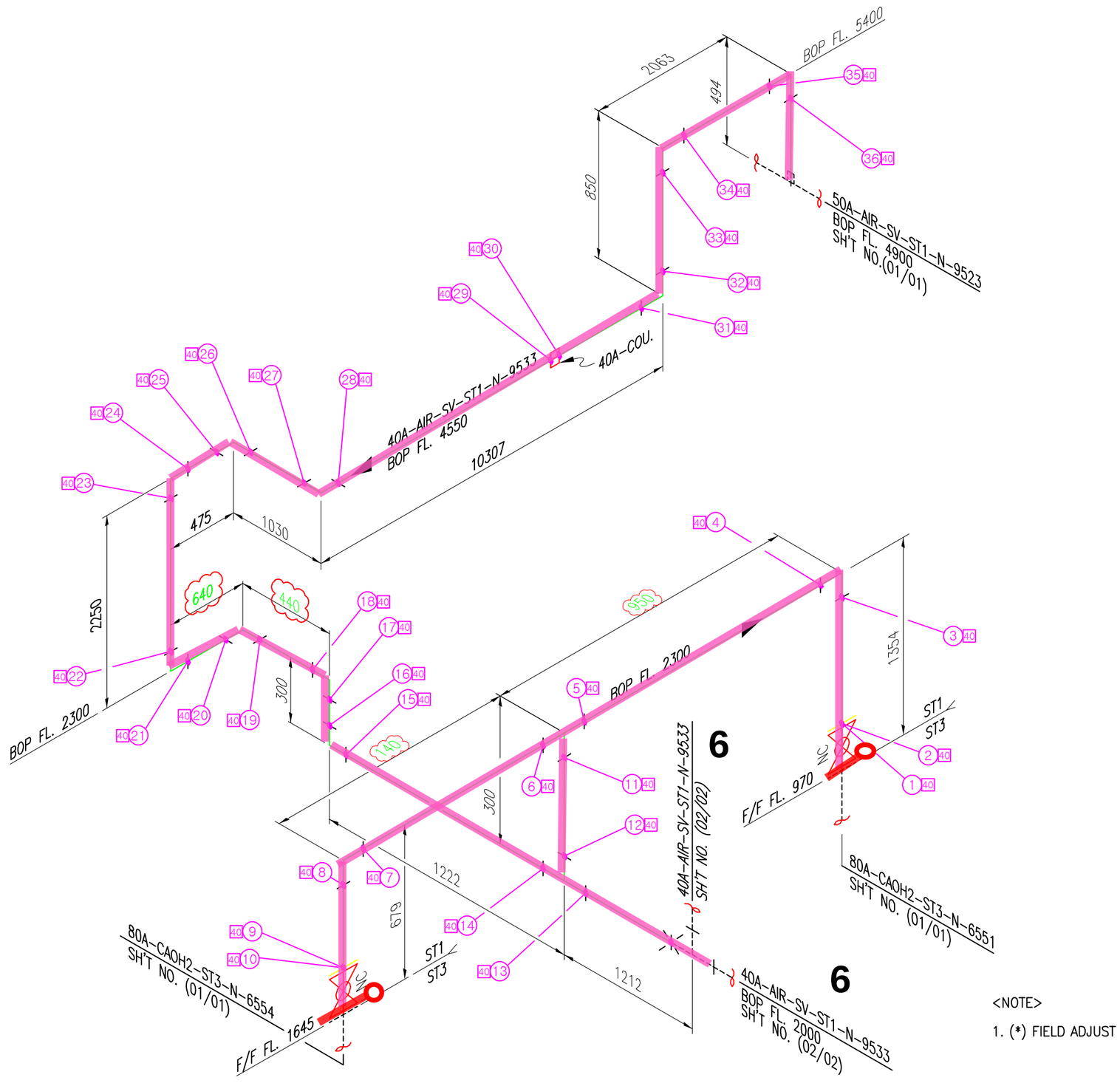

<NOTE>

1. (*) FIELD ADJUST

SK ecoplant

ITEM	SIZE	Q'TY	DESCRIPTION
		ST1	
P	40A	24.0M	PIPE, STS 304TP, ERW, PE – SCH 10S
E90	40A	11EA	ELBOW 90 DEG, STSF304, SW – SCH 10S
T	40A	3EA	TEE EQUAL, STSF304, SW – SCH 10S
FC	40A	1EA	COUPLING FULL, STSF304, SW – SCH 10S
F	40A	2EA	FLG SO, KS 10K, RF, STS304
G	40A	4EA	GASKET, KS 10K, RF, PTFE+EPDM, 3.0MM TH'K
B	40A	4SET	MACHINE BOLT & NUTS :STS 304 / W WASHERS
VB	40A	2EA	BALL VALVE, KS 10K, RF FLG'D, BODY-STSF304 /
			TRIM-STS304 / SEAT-PTFE, FB, LEVER
IN	25tX40A	24.0M	관 보온재(고무발포)
LOTO	40A	2EA	LOTO

* PIPE : P/P1 * 90° ELBOW : E90 * 45° ELBOW : E45 * TEE : T * RED.TEE : TR * STUB-IN : STU * REINFORCING PAD : RP * CON.RED : RC * ECC.RED : RE * CON.SWAGE : RCS/RCS1 * ECC.SWAGE : RES/RES1 * NIPPLE : NP/NP1/NP2 * CAP : CAP/CAP1 * PLUG : PLG * FULL COUPLING : FC * HALF COUPLING : HF/HF1
* STUB-IN : STU * SOCKET(HDPE/PVC) : SC * SADDLE(HDPE) : SD * FLANGE : F/F1 * GASKET : G/G1/G2 * BOLT & NUT : B/B1 * BLIND FLANGE : FB/FB1 * GATE VA. : VG/VG1/VG2 * BALL VA. : VB/VBL0/VB1/VB1L0/VB2/VB2L0 * BUTTERFLY VA. : VF/VF4 * CHECK VA. : VC/VC1/VC2/VC3/VC4/VC5/VC6/VC7
* GLOBE VA. : VL/VL1/VL2 * DIAPHRAGM VA. : VD/VDL0 * DAMPER : VP * QUICK COUPLING : SQC * FLEXIBLE JOINT(STEEL) : FLXB * FLEXIBLE JOINT(RUBBER) : FLXR * FLEXIBLE JOINT(STEEL_PTFE LINED) : FLXL * FLEXIBLE HOSE : FLXH * STEAM TRAP : ST * SPRAY NOZZLE : SPN * EMERGENCY SHOWER : SSH
* STRAINER(Y-TYPE) : YSTR * STRAINER(T-TYPE) : TSTR * STRAINER(BUCKET-TYPE) : BSTR * ANCHOR PLATE : STOP * BIRD SCREEN : BS * ISOLATION KIT : IK * UNLOADING BOX : UB * AIR TRAP : AT * LOTO : LOTO * SIGHT GLASS : SG * PRESSURE GAUGE : PG * SHILED : SH * SPECIAL BOLT & NUT : BL/BL1

CLIENT: SK hynix

7

INSULATION	CODE	N	CONDITION	PRESS. (kg/cm2g)	TEMP. (°C)	AREA	W14
	THICK.	–	DESIGN	10.0	60	UNIT	3FA
			OPERATING	5.0	AMB	REF. PLAN DWG.	CJ-M15W14-PI-A30-030008-A
						REF. P. & ID	CJ-M15W14-PR-A20-000143

REV. NO.	DATE	DESCRIPTION	BY	CHK.	APP'D
1	25.03.31	REVISED AS MARKED	황래종	안남후	박동영
0	25.01.24	APPROVED FOR CONSTRUCTION	황래종	안남후	박동영

CONTRACTOR: SK ecoplant

COMMODITY: AIR-SV

LINE NO.: 40A-AIR-SV-ST1-N-9533

PROJECT NAME: M15X Ph4 Project

JOB NO.: 22330D

SH'T NO.: 01 / 02

REV.: 1

PUNCH LIST

Project No : 22330D

Project Title : M15X Ph3 Project

Package No :

Date :

S/N	Drawing No	Description	Category A B C	Punch Clear Status			
				작성자		확인자	
				Name	Sign	Name	Sign
1							
2							
3							
4							
5							
6							
7							
8							
9							
10							
11							
12							
13							
14							
15							

Remarks

A : Before Hydro Test

B : Before M/C

C : Before Commissioning