DRAWING LIST FOR TEST PACKAGE

D-580

PROJECT NO.: 22328D

PROJECT TITLE : M15X Ph2 Project

No	PKG No	UNIT	LINE NUMBER			P&ID		REMARK
			ISO DRAWING No	SHEET	REV	P&ID No	REV	
1	580	3FA	80A-D-ST1-N-9961-01	1 OF 1	0	CJ-M15W14-PR-A20-000113	2A	
2	580	3FA	80A-D-ST1-N-9962-01	1 OF 1	0	CJ-M15W14-PR-A20-000113	2A	
3	580	3FA	150A-D-ST1-N-9511-01	1 OF 1	1	CJ-M15W13-PR-A20-000084	2	
4	580	3FA	150A-D-ST1-N-9513-01	1 OF 1	0	CJ-M15W13-PR-A20-000084	2	
5	580	3FA	150A-D-ST1-N-9514-01	1 OF 1	0	CJ-M15W13-PR-A20-000084	2	
6	580	3FA	150A-D-ST1-N-9515-01	1 OF 1	1	CJ-M15W13-PR-A20-000084	2	
7	580	3FA	250A-D-ST1-N-9651-01	1 OF 1	1	CJ-M15W13-PR-A20-000084	2	
8	580	3FA	OD63-D-HP1-N-9510	1 OF 1	0	CJ-M15W13-PR-A20-000084	2	
9	580	3FA	OD63-D-HP1-N-9512	1 OF 1	0	CJ-M15W13-PR-A20-000084	2	

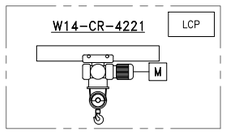

ITEM NO.		W14-AD-4229 A
SERVICE		CIF MBR 2'nd OXIC TANK AIR DIFFUSER
Q'TY		{10} 2A
TYPE		MEMBRANE (DISC)
CAPA.	L/min.ea	100
MAT'L		PP + EPDM

ITEM NO.		W14-T-4229 A
SERVICE		CIF MBR 2'nd OXIC TANK
Q'TY		1
TYPE		2A RECTANGULAR
SIZE	W x L x H | m	(5.225 x 6.375 x 11.0 (EH 8.8)
CAPA.	m3	(366.4 (EH 293))
HRT	hr	0.5
MAT'L		P.C + FRP

ITEM NO.		W14-T-4230 A
SERVICE		CIF MBR TANK
Q'TY		1
TYPE		RECTANGULAR 2A
SIZE	W x L x H | m	(2.9 x 22.65 x 6.15 (EH 3.8) 2.9 x 22.65 x 6.15 (EH 3.8))
CAPA.	m3	807.9 (EH 499)
HRT	hr	0.8
MAT'L		P.C + FRP

ITEM NO.		W14-T-4232 A
SERVICE		CIF MBR CLEANING TANK
Q'TY		1
TYPE		RECTANGULAR 2A
SIZE	W x L x H | m	(2.6 x 3.0 x 4.7 (EH 3.2))
CAPA.	m3	36.7 (EH 25)
HRT	min	–
MAT'L		C.S + FRP

ITEM NO.		W14-AD-4230 A
SERVICE		CIF MBR AIR DIFFUSER
Q'TY	ea	{64} 2A
TYPE		MEMBRANE (DISC)
CAPA.	L/min.ea	{100} 2A
MAT'L		PP + EPDM

ITEM NO.		W14-EJ-4231A
SERVICE		CIF MBR EJECTOR UNIT
Q'TY	ea	1
CAPA.	NI/s.ea	BY VENDOR
MAT'L		BY VENDOR

ITEM NO.		W14-MBR-4230 A
SERVICE		CIF MBR MEMBRANE
CAPA.	m3/d	15,000

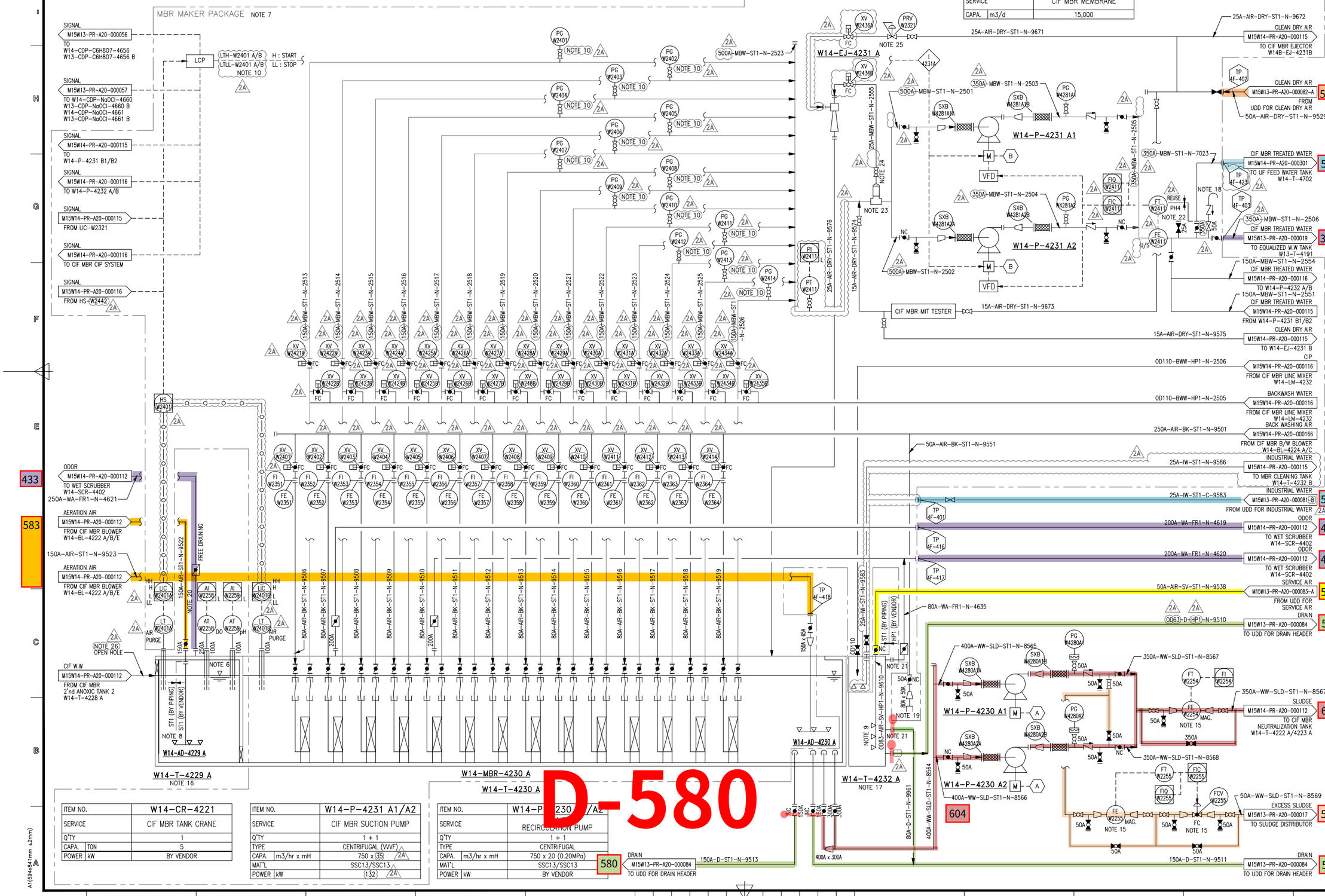

ITEM NO.		W14-CR-4221
SERVICE		CIF MBR TANK CRANE
Q'TY		1
CAPA.	TON	5
POWER	kW	BY VENDOR

ITEM NO.		W14-P-4231 A1/A2
SERVICE		CIF MBR SUCTION PUMP
Q'TY		1 + 1
TYPE		CENTRIFUGAL (WWF)
CAPA.	m3/hr x mH	750 x (35) 2A
MAT'L		SSC13/SSC13
POWER	kW	{132} 2A

ITEM NO.		W14-P-4230 A1/A2
SERVICE		RECIRCULATION PUMP
Q'TY		1 + 1
TYPE		CENTRIFUGAL
CAPA.	m3/hr x mH	750 x 20 (0.20MPa)
MAT'L		SSC13/SSC13
POWER	kW	BY VENDOR

대외비

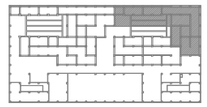

KEY PLAN (3F)

NOTE

1. TANK의 HWL 이하로 연결되는 모든 배관은 BLOCK 밸브 설치할 것.
2. 2m 이상 높은 곳에 설치된 밸브는 CHAIN VALVE 또는 PLATFORM 구성할 것.
3. MANHOLE SIZE : 1000W x 1000L x 2EA/TANK MANHOLE COVER : FRP
4. 운전 시 CLOSE 되는 배관에는 LOTO 설치.
5. CENTRIFUGAL PUMP MAT'L 표기 : CASING / IMPELLER
6. 내부 FRP LINING TANK의 SLEEVE는 SUS304 + FRP LINING 적용.
7. PACKAGE VENDOR 선정 후 내부 SYSTEM (모든 EQUIPMENT SPEC., LINE SIZE, MBR Nos., INSTRUMENT CONTROL SCHEME 등) 확정 예정.
8. 전면포기.
9. 측면포기.
10. 음압게 설치. DESIGN RANGE : −1~1 BAR
11. INTERLOCK NO. I−4231A (W14−P−4231 A1/A2 AUTO STOP) : REMOTE STATUS에서 W14−T−4229 A LEVEL (LI−W2301) LOW LOW STOP.
12. OPERATION TIME CHART.

PROCESS	SERVICE	B/W READY	B/W	RESTART
TIME(sec)	24hr	2	30	30
XV−2311A	OPEN	–	–	–
XV−2311B	–	–	OPEN	–
XV−2301	–	OPEN	–	OPEN
B/W PUMP	–	–	RUN	–

나머지 ON−OFF VALVE들도 동일하게 적용한다.

13. CIF MBR TANK CRANE은 PACKAGE VENDOR에서 공급한다.
14. DELETED.
15. INSTRUMENT VENDOR 선정 후 CONTROL SCHEME 및 CONTROL VALVE INLET / OUTLET NOZZLE SIZE 확정 예정.
16. MANHOLE 2개소 설치하여야 한다.
17. SUPPLIED BY MBR PACKAGE VENDOR.
18. HIGH POINT에 SIPHON BREAKER 설치할것. (CHECK VALVE의 경우 DUAL PLATE TYPE으로 적용)
19. 계의 세정간 CASSETTE CONNECTION 용도. MBR CLEANING TANK 인근에 설치할 것.
20. 유체의 흐름을 확인할 수 있도록 LINE 상에 PRESSURE GAUGE를 설치할 것. (TAG NO. 이래 참조)

– 150A−AIR−ST1−N−9522 : PG−W2361

21. CIF MBR CLEANING TANK SHALL BE INSTALLED COVER WITH DUCT. OVERFLOW LINE(80A) TO DRAIN HEADER.
22. 막도개 설치를 위한 FUTURE CONNECTION용.
23. PORT SIZE 350A. (TEE + 단관 + CAP 마감 : 단관 길이는 W14−P−4231 PUMP의 CASING 상단 보다 높게 제작)

REV.	정	설 명 DESCRIPTION	날 짜 DATE
2A		REVISED AFC	25.08.14
2		REVISED AFC	25.01.17
1		REVISED AFC	24.10.31

도 DRAWN BY	이 인 학	
검 토 CHECKED BY	한 진 희	
승 인 APPROVED BY	박 동 영	
제 작 사	SK 에코플랜트	
사 명 PROJECT TITLE	M15X Ph4 WWT Project	
도면명 DWG. TITLE	PIPING & INSTRUMENT DIAGRAM CIF MBR DISCHARGE & CIRCULATION PUMP A (1/2)	
척 SCALE	NONE	
날 짜 DATE	2025. 08. 14	
PROJECT NO.	22330D	REV. 2A
도면번호 SHEET NO.	CJ−M15W14−PR−A20−000113	

C:WUsersWTOPWDesktopWP&ID251013W[M15X Ph-4 for 인허가]CAD FILE_0910WCJ-M15W14-PR-A20-000113 R2 P&ID FOR CIF M

ITEM NO.	W14-AD-4229 B
SERVICE	CIF MBR 2'nd OXIC TANK AIR DIFFUSER
Q'TY	(110) 2A
TYPE	MEMBRANE (DISC)
CAPA. L/min.ea	100
MAT'L	PP + EPDM

ITEM NO.		W14-T-4229 B
SERVICE		CIF MBR 2'nd OXIC TANK
Q'TY		1
TYPE		RECTANGULAR
SIZE	W x L x H m	(5.175 x 5.25 x 11.0 (EH 8.8)) 2A
CAPA.	m3	(298.9 (EH 239))
HRT	min	0.4
MAT'L		R.C + FRP

ITEM NO.		W14-T-4230 B
SERVICE		CIF MBR TANK
Q'TY		1
TYPE		RECTANGULAR 2A
SIZE	W x L x H m	(2.9 x 22.65 x 6.15 (EH 3.8)) (2.85 x 22.65 x 6.15 (EH 3.8))
CAPA.	m3	801 (EH 495)
HRT	hr	0.8
MAT'L		P.C + FRP

ITEM NO.	W14-T-4232 B
SERVICE	CIF MBR CLEANING TANK
Q'TY	1
TYPE	RECTANGULAR
SIZE W x L x H m	(2.6 x 3.0 x 4.7 (EH 3.2))
CAPA. m3	36.7 (EH 25) 2A
HRT min	–
MAT'L	C.S + FRP

ITEM NO.		W14-AD-4230 B
SERVICE		CIF MBR AIR DIFFUSER 2A
Q'TY	ea	(64) 2A
TYPE		MEMBRANE (DISC)
CAPA.	L/min.ea	(100) 2A
MAT'L		PP + EPDM

ITEM NO.	W14-EJ-4231B
SERVICE	CIF MBR EJECTOR UNIT
Q'TY ea	1
CAPA. Nl/s.ea	BY VENDOR
MAT'L	BY VENDOR

ITEM NO.	W14-MBR-4230 B
SERVICE	CIF MBR MEMBRANE
CAPA. m3/d	15,000

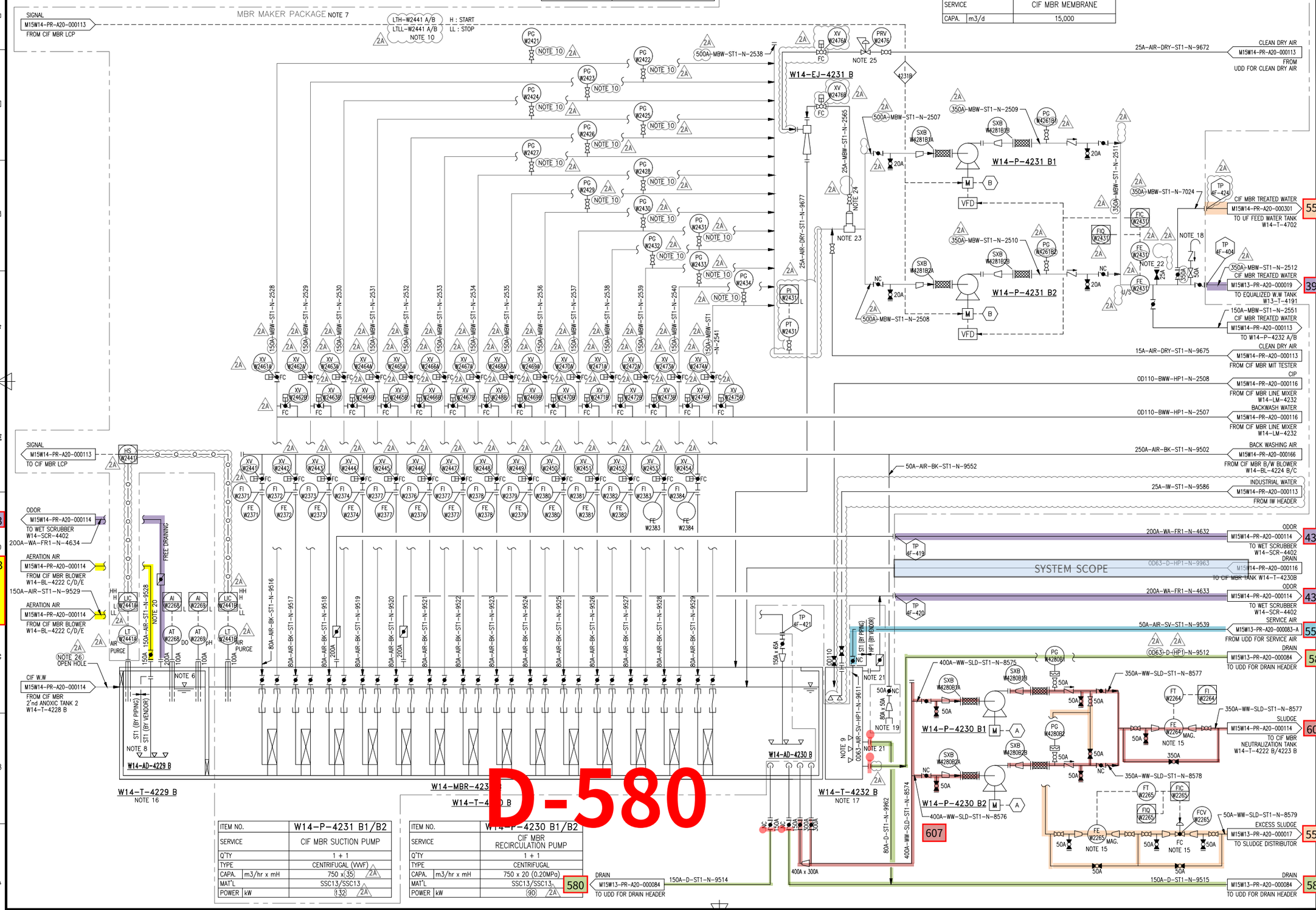

ITEM NO.	W14-P-4231 B1/B2
SERVICE	CIF MBR SUCTION PUMP
Q'TY	1 + 1
TYPE	CENTRIFUGAL (VVVF)
CAPA. m3/hr x mH	750 x (35) 2A
MAT'L	SSC13/SSC13
POWER kW	(132) 2A

ITEM NO.	W14-P-4230 B1/B2
SERVICE	CIF MBR RECIRCULATION PUMP
Q'TY	1 + 1
TYPE	CENTRIFUGAL
CAPA. m3/hr x mH	750 x 20 (0.20MPa)
MAT'L	SSC13/SSC13
POWER kW	(90) 2A

580 DRAIN M15W13-PR-A20-000084 TO UDD FOR DRAIN HEADER 150A-D-ST1-N-9514

대외비

KEY PLAN (3F)

NOTE

1. TANK와 HWL 이하로 연결되는 모든 배관은 BLOCK 밸브 설치할 것.
2. 2m 이상 높은 곳에 설치된 밸브는 CHAIN VALVE 또는 PLATFORM 구성할 것.
3. MANHOLE SIZE : 1000W x 1000L x 2EA/TANK MANHOLE COVER : FRP
4. 운전 시 CLOSE 되는 배관에는 LOTO 설치.
5. CENTRIFUGAL PUMP MAT'L 표기 : CASING / IMPELLER
6. 내부 FRP LINING TANK의 SLEEVE는 SUS304 + FRP LINING 적용.
7. PACKAGE VENDOR 선정 후 내부 SYSTEM (모든 EQUIPMENT SPEC., LINE SIZE, MBR Nos., INSTRUMENT CONTROL SCHEME 등) 확정 예정.
8. 전면포기.
9. 측면포기.
10. 음압계 설치. DESIGN RANGE : −1~1 BAR
556 INTERLOCK NO. I-4231 B (W14-P-4231 B1/B2 AUTO STOP) : REMOTE STATUS에서 W14-T-4229 B LEVEL (LI-W2321) LOW LOW STOP.
12. OPERATION TIME CHART.

PROCESS	SERVICE	B/W READY	B/W	RESTART
TIME(sec)	24hr	2	30	30
XV-2331A	OPEN	–	–	–
XV-2331B	–	–	OPEN	–
XV-2321	–	OPEN	–	OPEN
B/W PUMP	–	–	RUN	–

390 나머지 ON-OFF VALVE들도 동일하게 적용한다.

13. CIF MBR TANK CRANE은 PACKAGE VENDOR에서 공급한다.
14. DELETED.
15. INSTRUMENT VENDOR 선정 후 CONTROL SCHEME 및 CONTROL VALVE INLET / OUTLET NOZZLE SIZE 확정 예정.
16. MANHOLE 2개소 설치하여야 한다.
17. SUPPLIED BY MBR PACKAGE VENDOR.
18. HIGH POINT에 SIPHON BREAKER 설치할것. (CHECK VALVE의 경우 DUAL PLATE TYPE으로 적용)
19. 계의 세정간 CASSETTE CONNECTION 용도. MBR CLEANING TANK 인근에 설치할 것.
20. 유체의 흐름을 확인할 수 있도록 LINE 상에 PRESSURE GAUGE를 설치할 것. (TAG NO. 아래 참조)

PG 15A WXXXX

– 150A-AIR-ST1-N-9528 : PG-W2381

21. CIF MBR CLEANING TANK SHALL BE INSTALLED COVER WITH DUCT. OVERFLOW LINE(80A) TO DRAIN HEADER.
22. 덕도개 설치를 위한 FUTURE CONNECTION용.
23. PORT SIZE 350A. (TEE + 단관 + CAP 마감 : 단관 길이는 W14-P-4231 PUMP의 CASING 상단 보다 높게 제작)
24. AIR REALEASE VAVLE
25. SET POINT : 6BAR –> 3 ~ 1BAR
26. SIZE IS 3,500mm x 1,600mm 2A

REV.	DESCRIPTION	DATE
2A	REVISED AFC	25.08.14
2	REVISED AFC	25.01.17
1	REVISED AFC	24.10.31

433	제 도 DRAWN BY	이 인 학
553	검 토 CHECKED BY	한 진 희
580	승 인 APPROVED BY	박 동 영
	제 작 사	SK 에코플랜트
608	사 명 PROJECT TITLE	M15X Ph4 WWT Project
	도면명 DWG. TITLE	PIPING & INSTRUMENT DIAGRAM CIF MBR DISCHARGE & CIRCULATION PUMP B (2/2)
558	척 SCALE	NONE
	날 짜 DATE	2025. 08. 14
580	PROJECT NO.	22330D
	도면번호 SHEET NO.	CJ-M15W14-PR-A20-000115
	REV.	2A

C:₩Users₩TOPW₩Desktop₩P&ID251013₩[M15X Ph-4 for 인허가]CAD FILE_0910₩CJ-M15W14-PR-A20-000115 R1 P&ID FOR CIF M

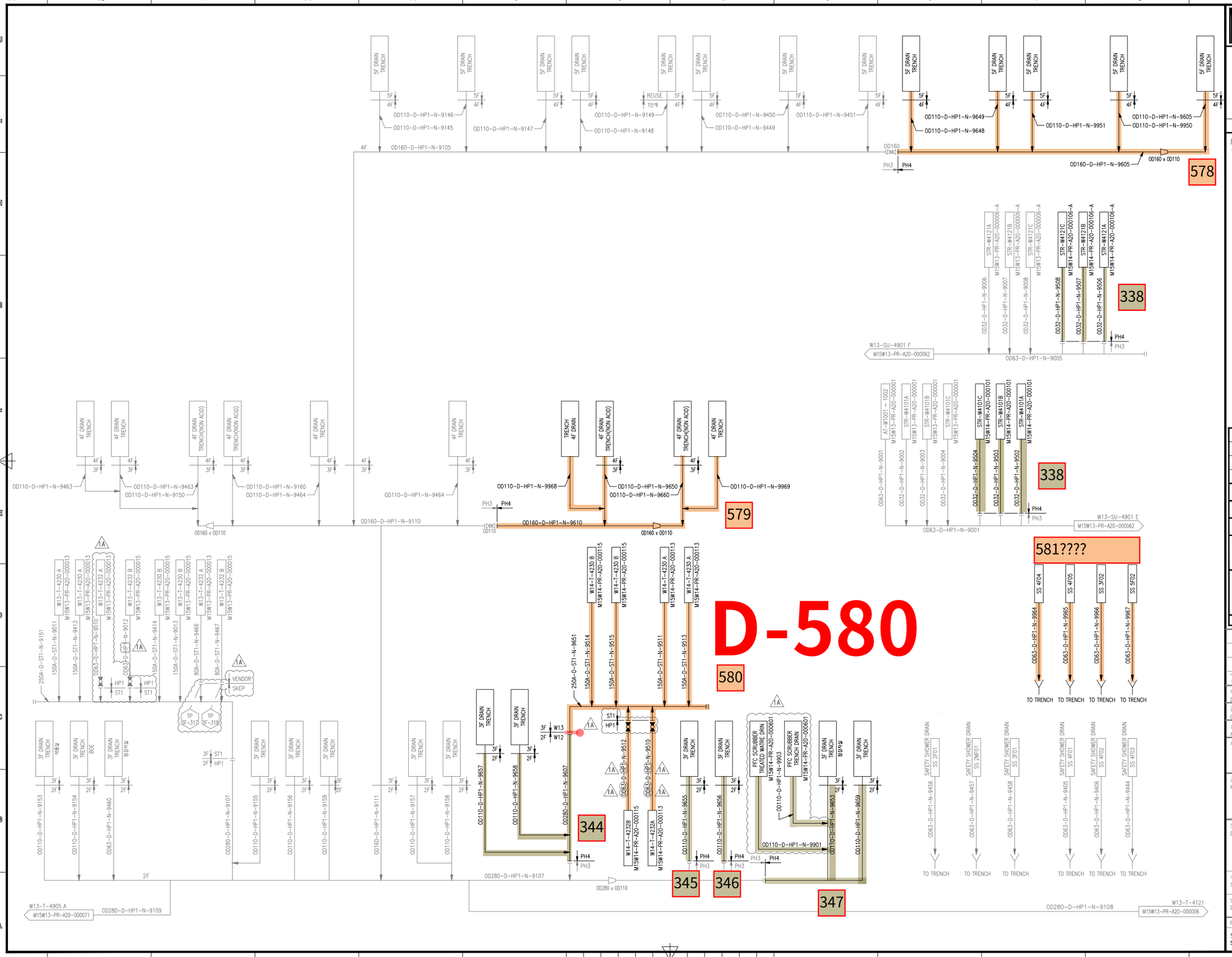

대외비

KEY PLAN

NOTE
1. OD110 1A

REV.	DESCRIPTION	DATE
1A	REVISED AFC	25.08.14
1	REVISED AFC	25.01.17
0	APPROVAL FOR CONSTRUCTION	24.09.30

제 도 DRAWN BY	이 인 학
검 토 CHECKED BY	한 진 희
승 인 APPROVED BY	박 동 영
제 작 사	SK 에코플랜트
공 사 명 PROJECT TITLE	M15X Ph4 WWT Project
PROJECT NO.	22330D

REV.	DESCRIPTION	DATE
2	REVISED AFC	24.06.21
1	REVISED AFC	23.02.28
0	APPROVAL FOR CONSTRUCTION	22.09.23

제 도 DRAWN BY	한 진 희
검 토 CHECKED BY	심 문 용
승 인 APPROVED BY	박 동 영
제 작 사	SK 에코플랜트
공 사 명 PROJECT TITLE	M15X Ph3 WWT Project
도면명 DWG. TITLE	UTILITY DISTRIBUTION DIAGRAM DRAIN WATER SYSTEM (1/2)
축 척 SCALE	NONE
날 짜 DATE	2024. 06. 21
PROJECT NO.	22330D
도면번호 SHEET NO.	CJ-M15W13-PR-A20-000084
REV.	2

A1(594x841mm ±2mm)

C:₩Users₩TOPW₩Desktop₩P&ID251013₩[M15X Ph-4 for 인허가]CAD FILE_0910₩CJ-M15W13-PR-A20-000084 R1 UDD FOR DRAIN

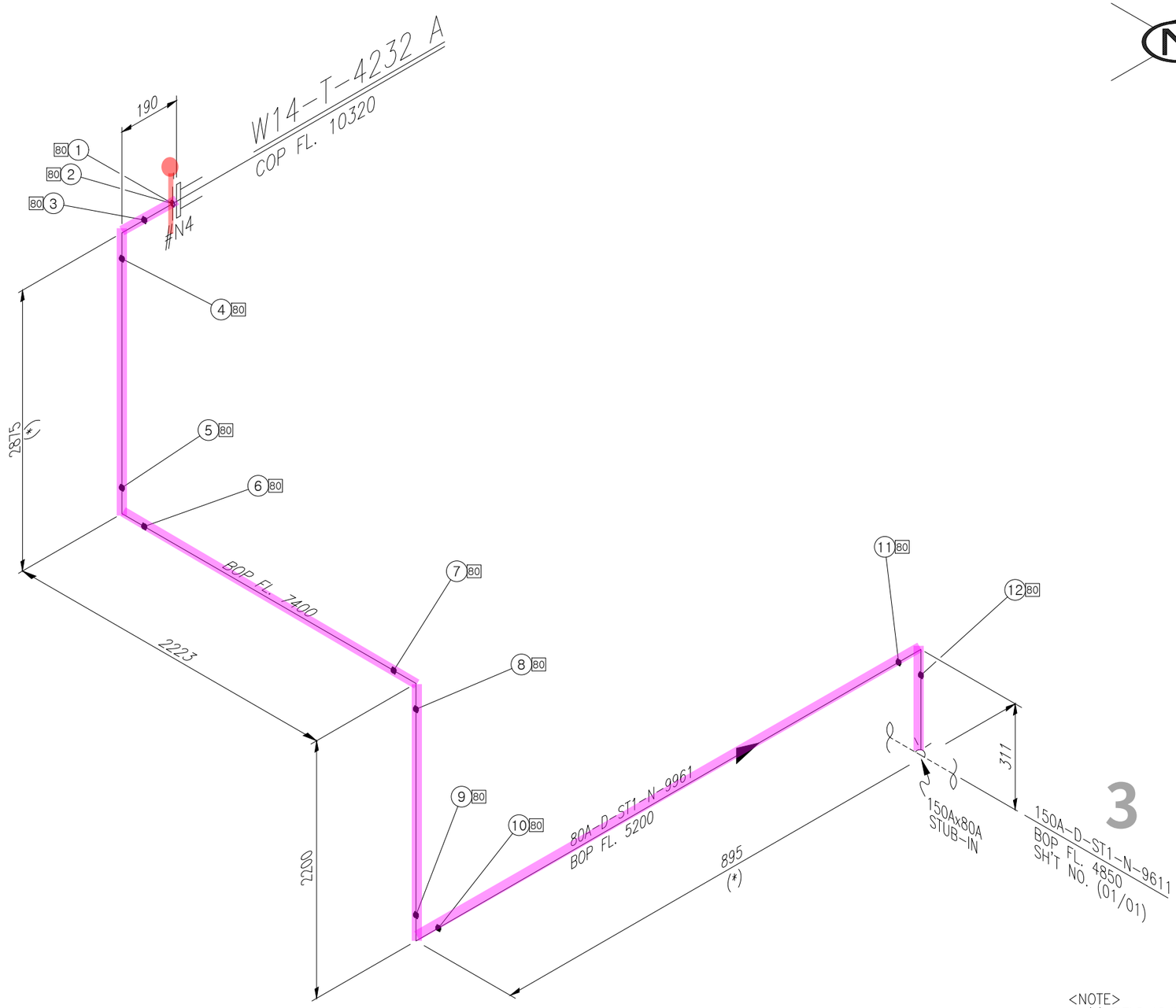

<NOTE>
1. (*) FIELD ADJUST

SK ecoplant

ITEM	SIZE	Q'TY	DESCRIPTION
		ST1	
P	80A	7.6M	PIPE, STS 304TP, ERW, BE – SCH 10S
E90	80A	5EA	ELBOW 90 DEG LR, STS304, ERW, BE – SCH 10S
F	80A	1EA	FLG SO, KS 10K, RF, STS304
G	80A	1EA	GASKET, KS 10K, RF, PTFE+EPDM, 3.0MM TH'K
B	80A	1SET	MACHINE BOLT & NUTS :STS 304 / W WASHERS

* PIPE : P/P1 * 90° ELBOW : E90 * 45° ELBOW : E45 * TEE : T * RED.TEE : TR * STUB-IN : STU * REINFORCING PAD : RP * CON.RED : RC * ECC.RED : RE * CON.SWAGE : RCS/RCS1 * ECC.SWAGE : RES/RES1 * NIPPLE : NP/NP1/NP2 * CAP : CAP/CAP1 * PLUG : PLG * FULL COUPLING : FC * HALF COUPLING : HF/HF1
* STUB-IN : STU * SOCKET(HDPE/PVC) : SC * SADDLE(HDPE) : SD * FLANGE : F/F1 * GASKET : G/G1/G2 * BOLT & NUT : B/B1 * BLIND FLANGE : FB/FB1 * GATE VA. : VG/VG1/VG2 * BALL VA. : VB/VBLO/VB1/VB1LO/VB2/VB2LO * BUTTERFLY VA. : VF/VF4 * CHECK VA. : VC/VC1/VC2/VC3/VC4/VC5/VC6/VC7
* GLOBE VA. : VL/VL1/VL2 * DIAPHRAGM VA. : VD/VDLO * DAMPER : VP * QUICK COUPLING : SQC * FLEXIBLE JOINT(STEEL) : FLXB * FLEXIBLE JOINT(RUBBER) : FLXR * FLEXIBLE JOINT(STEEL_PTFE LINED) : FLXL * FLEXIBLE HOSE : FLXH * STEAM TRAP : ST * SPRAY NOZZLE : SPN * EMERGENCY SHOWER : SSH
* STRAINER(Y-TYPE) : YSTR * STRAINER(T-TYPE) : TSTR * STRAINER(BUCKET-TYPE) : BSTR * ANCHOR PLATE : STOP * BIRD SCREEN : BS * ISOLATION KIT : IK * UNLOADING BOX : UB * AIR TRAP : AT * LOTO : LOTO * SIGHT GLASS : SG * PRESSURE GAUGE : PG * SHILED : SH * SPECIAL BOLT & NUT : BL/BL1

CLIENT SK hynix 1

INSULATION	CODE	N	CONDITION	PRESS. (kg/cm2g)	TEMP. (°C)
	THICK.	–	DESIGN	1.0	60
			OPERATING	ATM	AMB

AREA W14
UNIT 3FA
REF. PLAN DWG. CJ-M15W14-PI-A30-030002-E
REF. P & ID CJ-M15W14-PR-A20-000113

REV. NO.	DATE	DESCRIPTION	BY	CHK	APP'D
0	25.03.31	APPROVED FOR CONSTRUCTION	황래종	안남후	박동영

CONTRACTOR SK ecoplant
PROJECT NAME M15X Ph4 Project
COMMODITY D
JOB NO. 22330D
LINE NO. 80A-D-ST1-N-9961
SH'T NO. 01 / 01
REV. 0

경고 : 본 도면은 SK HYNIX의 기업비밀 자료로서, 어떠한 경우에도 목적 외 사용, 복제, 제3자에게 공개, 누설 및 유출할 수 없으며, 회사는 유포자의 불법 사용으로 피해가 발생할 경우 유포자에게 민/형사상 책임을 요구할 수 있음.

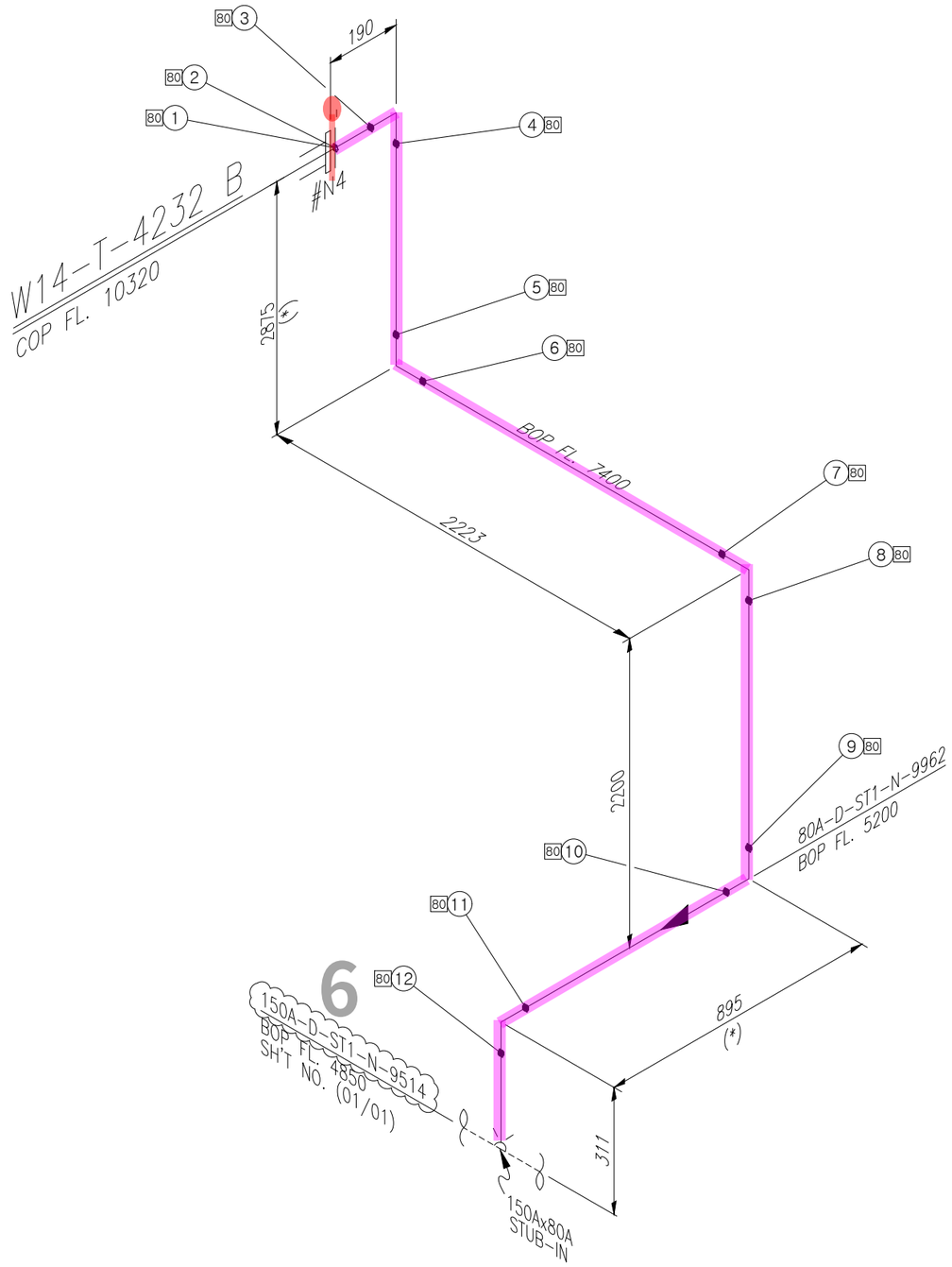

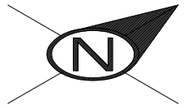

SK ecoplant

ITEM	SIZE	Q'TY	DESCRIPTION
		ST1	
P	80A	7.6M	PIPE, STS 304TP, ERW, BE – SCH 10S
E90	80A	5EA	ELBOW 90 DEG LR, STS304, ERW, BE – SCH 10S
F	80A	1EA	FLG SO, KS 10K, RF, STS304
G	80A	1EA	GASKET, KS 10K, RF, PTFE+EPDM, 3.0MM TH'K
B	80A	1SET	MACHINE BOLT & NUTS :STS 304 / W WASHERS

<NOTE>
1. (*) FIELD ADJUST

* PIPE : P/P1 * 90° ELBOW : E90 * 45° ELBOW : E45 * TEE : T * RED.TEE : TR * STUB-IN : STU * REINFORCING PAD : RP * CON.RED : RC * ECC.RED : RE * CON.SWAGE : RCS/RCS1 * ECC.SWAGE : RES/RES1 * NIPPLE : NP/NP1/NP2 * CAP : CAP/CAP1 * PLUG : PLG * FULL COUPLING : FC * HALF COUPLING : HF/HF1
* STUB-IN : STU * SOCKET(HDPE/PVC) : SC * SADDLE(HDPE) : SD * FLANGE : F/F1 * GASKET : G/G1/G2 * BOLT & NUT : B/B1 * BLIND FLANGE : FB/FB1 * GATE VA. : VG/VG1/VG2 * BALL VA. : VB/VBL0/VB1/VB1L0/VB2/VB2L0 * BUTTERFLY VA. : VF/VF4 * CHECK VA. : VC/VC1/VC2/VC3/VC4/VC5/VC6/VC7
* GLOBE VA. : VL/VL1/VL2 * DIAPHRAGM VA. : VD/VDL0 * DAMPER : VP * QUICK COUPLING : SQC * FLEXIBLE JOINT(STEEL) : FLXB * FLEXIBLE JOINT(RUBBER) : FLXR * FLEXIBLE JOINT(STEEL_PTFE LINED) : FLXL * FLEXIBLE HOSE : FLXH * STEAM TRAP : ST * SPRAY NOZZLE : SPN * EMERGENCY SHOWER : SSH
* STRAINER(Y-TYPE) : YSTR * STRAINER(T-TYPE) : TSTR * STRAINER(BUCKET-TYPE) : BSTR * ANCHOR PLATE : STOP * BIRD SCREEN : BS * ISOLATION KIT : IK * UNLOADING BOX : UB * AIR TRAP : AT * LOTO : LOTO * SIGHT GLASS : SG * PRESSURE GAUGE : PG * SHILED : SH * SPECIAL BOLT & NUT : BL/BL1

CLIENT SK hynix 2

INSULATION	CODE	N	CONDITION	PRESS. (kg/cm2g)	TEMP. (°C)
	THICK.	–	DESIGN	1.0	60
			OPERATING	ATM	AMB

AREA W14
UNIT 3FA
REF. PLAN DWG. CJ-M15W14-PI-A30-030002-E
REF. P & ID CJ-M15W14-PR-A20-000115

REV. NO.	DATE	DESCRIPTION	BY	CHK	APP'D
0	25.03.31	APPROVED FOR CONSTRUCTION	황래종	안남후	박동영

CONTRACTOR SK ecoplant
PROJECT NAME M15X Ph4 Project
COMMODITY D
JOB NO. 22330D
LINE NO. 80A-D-ST1-N-9962
SH'T NO. 01 / 01
REV. 0

경고 : 본 도면은 SK HYNIX의 기업비밀 자료로서, 어떠한 경우에도 목적 외 사용, 복제, 제3자에게 공개, 누설 및 유출할 수 없으며, 회사는 유포자의 불법 사용으로 피해가 발생할 경우 유포자에게 민/형사상 책임을 요구할 수 있음.

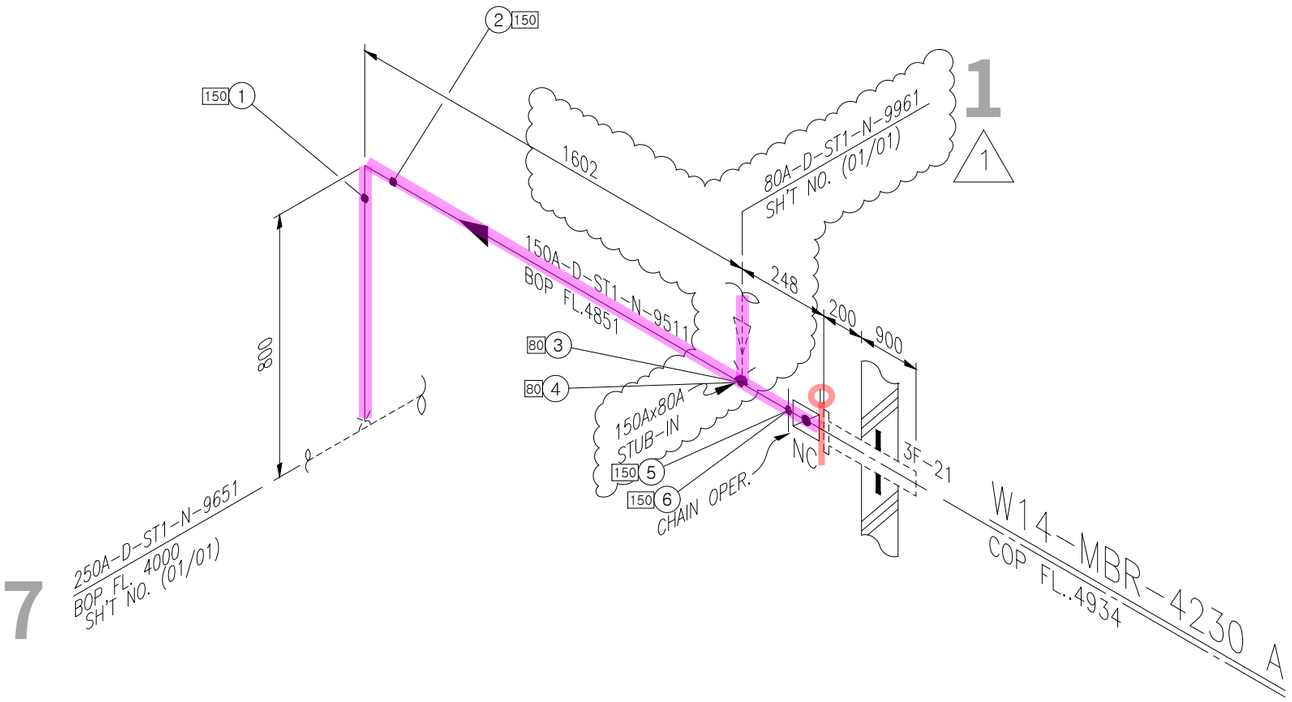

N

1

<NOTE>
1. (*) FIELD ADJUST

SK ecoplant

ITEM	SIZE	Q'TY	DESCRIPTION
		ST1	
P	150A	2.5M	PIPE, STS 304TP, ERW, BE – SCH 10S
E90	150A	1EA	ELBOW 90 DEG LR, STS304, ERW, BE – SCH 10S
F	150A	1EA	FLG SO, KS 10K, RF, STS304
G	150A	1EA	GASKET, KS 10K, RF, PTFE+EPDM, 3.0MM TH'K
G1	150A	1EA	GASKET, KS 10K, FF, PTFE+EPDM, 3.0MM TH'K
BL	150A	1SET	MACHINE BOLT & NUTS :STS 304 / W WASHERS(SPECIAL)
VFC	150A	1EA	BUTTERFLY VALVE, KS 10K, WAFER RF, BODY-GCD450 /
			TRIM-STS304 / EPDM-LINED, CHAIN
LOTO	150A	1EA	LOTO
STU	150Ax80A	1EA	STUB-IN BRANCH

* PIPE : P/P1 * 90° ELBOW : E90 * 45° ELBOW : E45 * TEE : T * RED.TEE : TR * STUB-IN : STU * REINFORCING PAD : RP * CON.RED : RC * ECC.RED : RE * CON.SWAGE : RCS/RCS1 * ECC.SWAGE : RES/RES1 * NIPPLE : NP/NP1/NP2 * CAP : CAP/CAP1 * PLUG : PLG * FULL COUPLING : FC * HALF COUPLING : HF/HF1
* STUB-IN : STU * SOCKET(HDPE/PVC) : SC * SADDLE(HDPE) : SD * FLANGE : F/F1 * GASKET : G/G1/G2 * BOLT & NUT : B/B1 * BLIND FLANGE : FB/FB1 * GATE VA. : VG/VG1/VG2 * BALL VA. : VB/VBL0/VB1/VB1L0/VB2/VB2L0 * BUTTERFLY VA. : VF/VF4 * CHECK VA. : VC/VC1/VC2/VC3/VC4/VC5/VC6/VC7
* GLOBE VA. : VL/VL1/VL2 * DIAPHRAGM VA. : VD/VDL0 * DAMPER : VP * QUICK COUPLING : SQC * FLEXIBLE JOINT(STEEL) : FLXB * FLEXIBLE JOINT(RUBBER) : FLXR * FLEXIBLE JOINT(STEEL_PTFE LINED) : FLXL * FLEXIBLE HOSE : FLXH * STEAM TRAP : ST * SPRAY NOZZLE : SPN * EMERGENCY SHOWER : SSH
* STRAINER(Y-TYPE) : YSTR * STRAINER(T-TYPE) : TSTR * STRAINER(BUCKET-TYPE) : BSTR * ANCHOR PLATE : STOP * BIRD SCREEN : BS * ISOLATION KIT : IK * UNLOADING BOX : UB * AIR TRAP : AT * LOTO : LOTO * SIGHT GLASS : SG * PRESSURE GAUGE : PG * SHILED : SH * SPECIAL BOLT & NUT : BL/BL1

CLIENT SK hynix 3

INSULATION	CODE	N	CONDITION	PRESS. (kg/cm2g)	TEMP. (°C)
	THICK.	–	DESIGN	1.0	60
			OPERATING	ATM	AMB

AREA W14
UNIT 3FA
REF. PLAN DWG. CJ-M15W14-PI-A30-030002-C
REF. P & ID CJ-M15W14-PR-A20-000113

REV. NO.	DATE	DESCRIPTION	BY	CHK	APP'D
1	25.03.31	REVISED AS MARKED	황래종	안남후	박동영
0	25.01.24	APPROVED FOR CONSTRUCTION	황래종	안남후	박동영

CONTRACTOR SK ecoplant
PROJECT NAME M15X Ph4 Project
COMMODITY D
JOB NO. 22330D
LINE NO. 150A-D-ST1-N-9511
SH'T NO. 01 / 01
REV. 1

경고 : 본 도면은 SK HYNIX의 기업비밀 자료로서, 어떠한 경우에도 목적 외 사용, 복제, 제3자에게 공개, 누설 및 유출할 수 없으며, 회사는 유포자의 불법 사용으로 피해가 발생할 경우 유포자에게 민/형사상 책임을 요구할 수 있음.

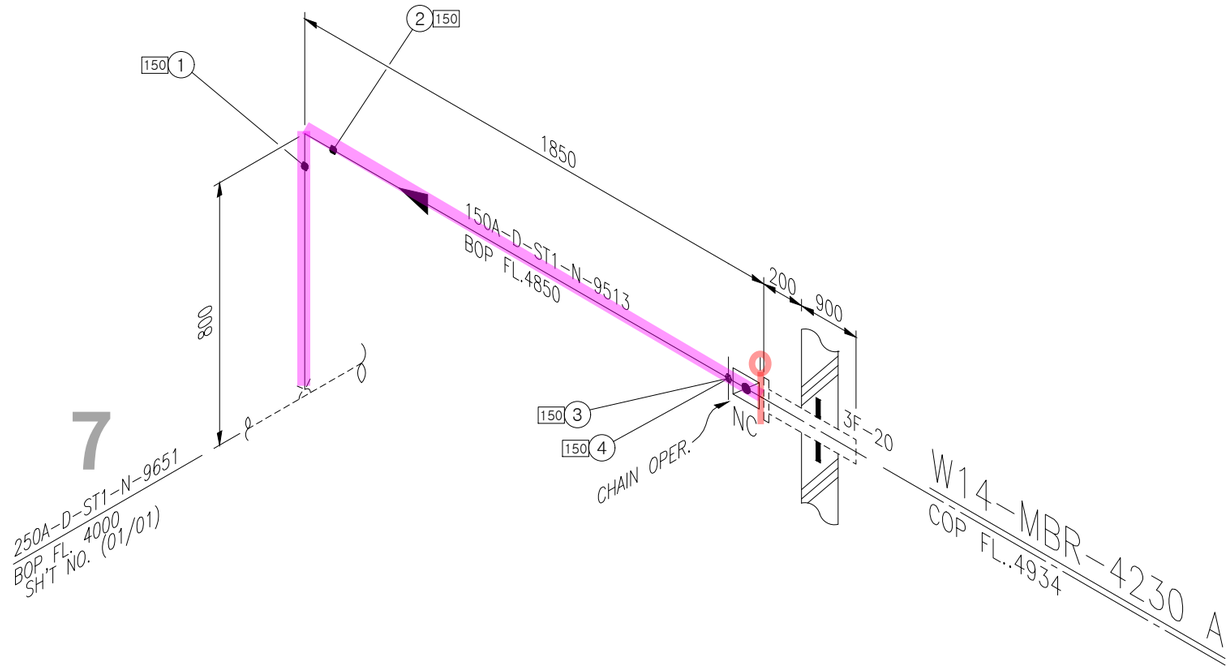

<NOTE>
1. (*) FIELD ADJUST

ITEM	SIZE	Q'TY	DESCRIPTION
		ST1	
P	150A	2.5M	PIPE, STS 304TP, ERW, BE – SCH 10S
E90	150A	1EA	ELBOW 90 DEG LR, STS304, ERW, BE – SCH 10S
F	150A	1EA	FLG SO, KS 10K, RF, STS304
G	150A	1EA	GASKET, KS 10K, RF, PTFE+EPDM, 3.0MM TH'K
G1	150A	1EA	GASKET, KS 10K, FF, PTFE+EPDM, 3.0MM TH'K
BL	150A	1SET	MACHINE BOLT & NUTS :STS 304 / W WASHERS(SPECIAL)
VFC	150A	1EA	BUTTERFLY VALVE, KS 10K, WAFER RF, BODY-GCD450 /
			TRIM-STS304 / EPDM-LINED, CHAIN
LOTO	150A	1EA	LOTO

* PIPE : P/P1 * 90° ELBOW : E90 * 45° ELBOW : E45 * TEE : T * RED.TEE : TR * STUB-IN : STU * REINFORCING PAD : RP * CON.RED : RC * ECC.RED : RE * CON.SWAGE : RCS/RCS1 * ECC.SWAGE : RES/RES1 * NIPPLE : NP/NP1/NP2 * CAP : CAP/CAP1 * PLUG : PLG * FULL COUPLING : FC * HALF COUPLING : HF/HF1
* STUB-IN : STU * SOCKET(HDPE/PVC) : SC * SADDLE(HDPE) : SD * FLANGE : F/F1 * GASKET : G/G1/G2 * BOLT & NUT : B/B1 * BLIND FLANGE : FB/FB1 * GATE VA. : VG/VG1/VG2 * BALL VA. : VB/VBL0/VB1/VB1L0/VB2/VB2L0 * BUTTERFLY VA. : VF/VF4 * CHECK VA. : VC/VC1/VC2/VC3/VC4/VC5/VC6/VC7
* GLOBE VA. : VL/VL1/VL2 * DIAPHRAGM VA. : VD/VDL0 * DAMPER : VP * QUICK COUPLING : SQC * FLEXIBLE JOINT(STEEL) : FLXB * FLEXIBLE JOINT(RUBBER) : FLXR * FLEXIBLE JOINT(STEEL_PTFE LINED) : FLXL * FLEXIBLE HOSE : FLXH * STEAM TRAP : ST * SPRAY NOZZLE : SPN * EMERGENCY SHOWER : SSH
* STRAINER(Y-TYPE) : YSTR * STRAINER(T-TYPE) : TSTR * STRAINER(BUCKET-TYPE) : BSTR * ANCHOR PLATE : STOP * BIRD SCREEN : BS * ISOLATION KIT : IK * UNLOADING BOX : UB * AIR TRAP : AT * LOTO : LOTO * SIGHT GLASS : SG * PRESSURE GAUGE : PG * SHILED : SH * SPECIAL BOLT & NUT : BL/BL1

CLIENT SK hynix 4

INSULATION	CODE	N	CONDITION	PRESS. (kg/cm2g)	TEMP. (°C)
	THICK.	–	DESIGN	1.0	60
			OPERATING	ATM	AMB

AREA W14
UNIT 3FA
REF. PLAN DWG. CJ-M15W14-PI-A30-030002-C
REF. P & ID CJ-M15W14-PR-A20-000113

REV. NO.	DATE	DESCRIPTION	BY	CHK	APP'D
0	25.01.24	APPROVED FOR CONSTRUCTION	황래종	안남후	박동영

CONTRACTOR SK ecoplant
PROJECT NAME M15X Ph4 Project
COMMODITY D
JOB NO. 22330D
LINE NO. 150A-D-ST1-N-9513
SH'T NO. 01 / 01
REV. 0

경고 : 본 도면은 SK HYNIX의 기업비밀 자료로서, 어떠한 경우에도 목적 외 사용, 복제, 제3자에게 공개, 누설 및 유출할 수 없으며, 회사는 유포자의 불법 사용으로 피해가 발생할 경우 유포자에게 민/형사상 책임을 요구할 수 있음.

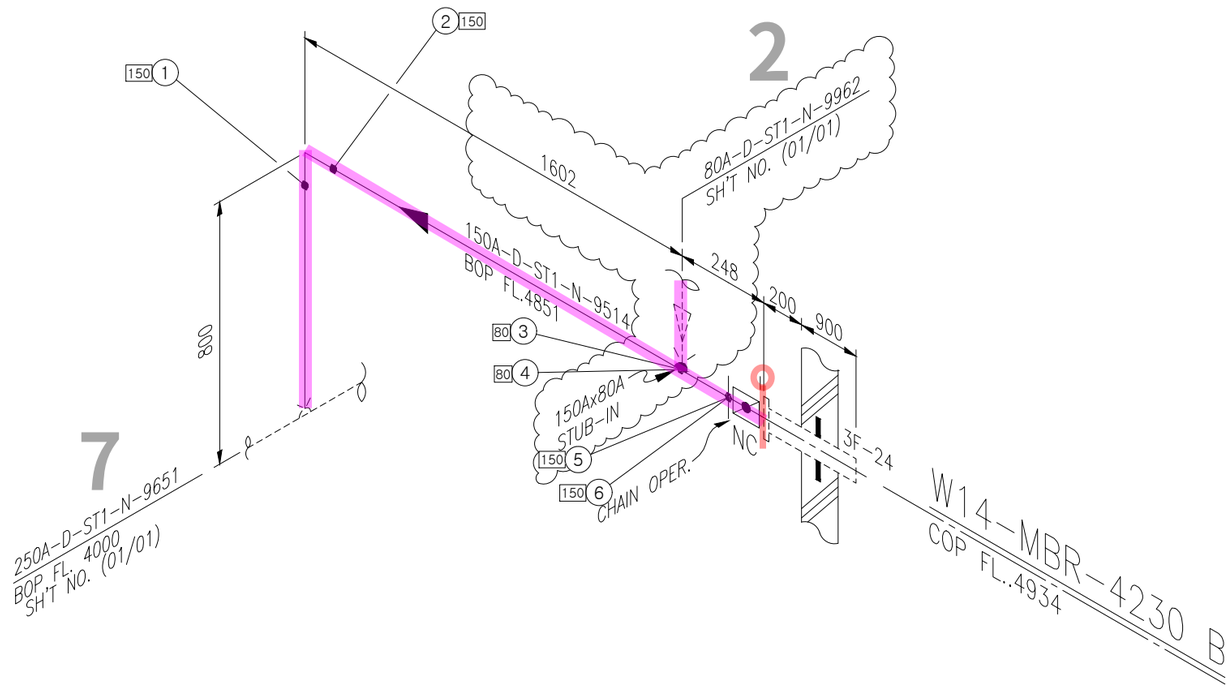

<NOTE>
1. (*) FIELD ADJUST

ITEM	SIZE	Q'TY	DESCRIPTION
		ST1	
P	150A	2.5M	PIPE, STS 304TP, ERW, BE – SCH 10S
E90	150A	1EA	ELBOW 90 DEG LR, STS304, ERW, BE – SCH 10S
F	150A	1EA	FLG SO, KS 10K, RF, STS304
G	150A	1EA	GASKET, KS 10K, RF, PTFE+EPDM, 3.0MM TH'K
G1	150A	1EA	GASKET, KS 10K, FF, PTFE+EPDM, 3.0MM TH'K
BL	150A	1SET	MACHINE BOLT & NUTS :STS 304 / W WASHERS(SPECIAL)
VFC	150A	1EA	BUTTERFLY VALVE, KS 10K, WAFER RF, BODY-GCD450 /
			TRIM-STS304 / EPDM-LINED, CHAIN
LOTO	150A	1EA	LOTO
STU	150Ax80A	1EA	STUB-IN BRANCH

* PIPE : P/P1 * 90° ELBOW : E90 * 45° ELBOW : E45 * TEE : T * RED.TEE : TR * STUB-IN : STU * REINFORCING PAD : RP * CON.RED : RC * ECC.RED : RE * CON.SWAGE : RCS/RCS1 * ECC.SWAGE : RES/RES1 * NIPPLE : NP/NP1/NP2 * CAP : CAP/CAP1 * PLUG : PLG * FULL COUPLING : FC * HALF COUPLING : HF/HF1
* STUB-IN : STU * SOCKET(HDPE/PVC) : SC * SADDLE(HDPE) : SD * FLANGE : F/F1 * GASKET : G/G1/G2 * BOLT & NUT : B/B1 * BLIND FLANGE : FB/FB1 * GATE VA. : VG/VG1/VG2 * BALL VA. : VB/VBL0/VB1/VB1L0/VB2/VB2L0 * BUTTERFLY VA. : VF/VF4 * CHECK VA. : VC/VC1/VC2/VC3/VC4/VC5/VC6/VC7
* GLOBE VA. : VL/VL1/VL2 * DIAPHRAGM VA. : VD/VDL0 * DAMPER : VP * QUICK COUPLING : SQC * FLEXIBLE JOINT(STEEL) : FLXB * FLEXIBLE JOINT(RUBBER) : FLXR * FLEXIBLE JOINT(STEEL_PTFE LINED) : FLXL * FLEXIBLE HOSE : FLXH * STEAM TRAP : ST * SPRAY NOZZLE : SPN * EMERGENCY SHOWER : SSH
* STRAINER(Y-TYPE) : YSTR * STRAINER(T-TYPE) : TSTR * STRAINER(BUCKET-TYPE) : BSTR * ANCHOR PLATE : STOP * BIRD SCREEN : BS * ISOLATION KIT : IK * UNLOADING BOX : UB * AIR TRAP : AT * LOTO : LOTO * SIGHT GLASS : SG * PRESSURE GAUGE : PG * SHILED : SH * SPECIAL BOLT & NUT : BL/BL1

CLIENT SK hynix 5

INSULATION	CODE	N	CONDITION	PRESS. (kg/cm2g)	TEMP. (°C)
	THICK.	–	DESIGN	1.0	60
			OPERATING	ATM	AMB

AREA W14
UNIT 3FA
REF. PLAN DWG. CJ-M15W14-PI-A30-030002-C
REF. P & ID CJ-M15W14-PR-A20-000115

REV. NO.	DATE	DESCRIPTION	BY	CHK	APP'D
0	25.01.24	APPROVED FOR CONSTRUCTION	황래종	안남후	박동영

CONTRACTOR SK ecoplant
PROJECT NAME M15X Ph4 Project
COMMODITY D
JOB NO. 22330D
LINE NO. 150A-D-ST1-N-9514
SH'T NO. 01 / 01
REV. 0

경고 : 본 도면은 SK HYNIX의 기업비밀 자료로서, 어떠한 경우에도 목적 외 사용, 복제, 제3자에게 공개, 누설 및 유출할 수 없으며, 회사는 유포자의 불법 사용으로 피해가 발생할 경우 유포자에게 민/형사상 책임을 요구할 수 있음.

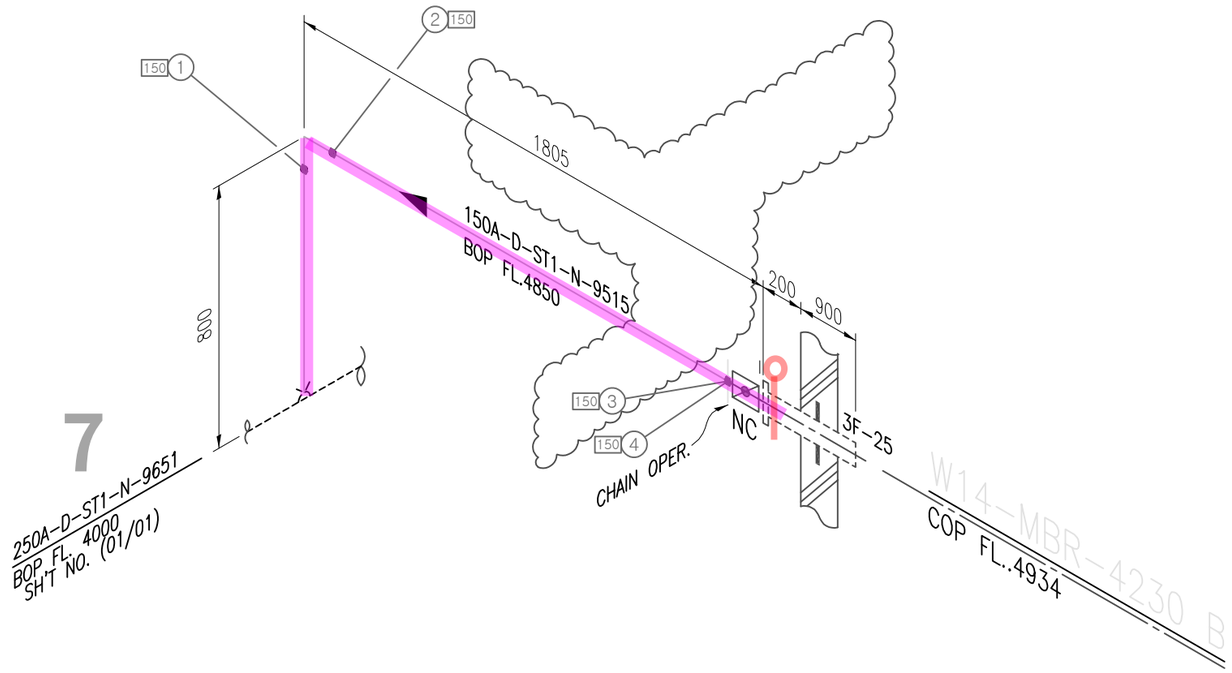

<NOTE>
1. (*) FIELD ADJUST

ITEM	SIZE	Q'TY	DESCRIPTION
		ST1	
P	150A	2.5M	PIPE, STS 304TP, ERW, BE – SCH 10S
E90	150A	1EA	ELBOW 90 DEG LR, STS304, ERW, BE – SCH 10S
F	150A	1EA	FLG SO, KS 10K, RF, STS304
G	150A	1EA	GASKET, KS 10K, RF, PTFE+EPDM, 3.0MM TH'K
G1	150A	1EA	GASKET, KS 10K, FF, PTFE+EPDM, 3.0MM TH'K
BL	150A	1SET	MACHINE BOLT & NUTS :STS 304 / W WASHERS(SPECIAL)
VFC	150A	1EA	BUTTERFLY VALVE, KS 10K, WAFER RF, BODY-GCD450 /
			TRIM-STS304 / EPDM-LINED, CHAIN
LOTO	150A	1EA	LOTO

* PIPE : P/P1 * 90° ELBOW : E90 * 45° ELBOW : E45 * TEE : T * RED.TEE : TR * STUB-IN : STU * REINFORCING PAD : RP * CON.RED : RC * ECC.RED : RE * CON.SWAGE : RCS/RCS1 * ECC.SWAGE : RES/RES1 * NIPPLE : NP/NP1/NP2 * CAP : CAP/CAP1 * PLUG : PLG * FULL COUPLING : FC * HALF COUPLING : HF/HF1
* STUB-IN : STU * SOCKET(HDPE/PVC) : SC * SADDLE(HDPE) : SD * FLANGE : F/F1 * GASKET : G/G1/G2 * BOLT & NUT : B/B1 * BLIND FLANGE : FB/FB1 * GATE VA. : VG/VG1/VG2 * BALL VA. : VB/VBL0/VB1/VB1L0/VB2/VB2L0 * BUTTERFLY VA. : VF/VF4 * CHECK VA. : VC/VC1/VC2/VC3/VC4/VC5/VC6/VC7
* GLOBE VA. : VL/VL1/VL2 * DIAPHRAGM VA. : VD/VDL0 * DAMPER : VP * QUICK COUPLING : SQC * FLEXIBLE JOINT(STEEL) : FLXB * FLEXIBLE JOINT(RUBBER) : FLXR * FLEXIBLE JOINT(STEEL_PTFE LINED) : FLXL * FLEXIBLE HOSE : FLXH * STEAM TRAP : ST * SPRAY NOZZLE : SPN * EMERGENCY SHOWER : SSH
* STRAINER(Y-TYPE) : YSTR * STRAINER(T-TYPE) : TSTR * STRAINER(BUCKET-TYPE) : BSTR * ANCHOR PLATE : STOP * BIRD SCREEN : BS * ISOLATION KIT : IK * UNLOADING BOX : UB * AIR TRAP : AT * LOTO : LOTO * SIGHT GLASS : SG * PRESSURE GAUGE : PG * SHILED : SH * SPECIAL BOLT & NUT : BL/BL1

CLIENT: SK hynix

6

INSULATION	CODE	N	CONDITION	PRESS. (kg/cm2g)	TEMP. (°C)
	THICK.	–	DESIGN	1.0	60
			OPERATING	ATM	AMB

AREA: W14
UNIT: 3FA
REF. PLAN DWG.: CJ-M15W14-PI-A30-030002-C
REF. P & ID: CJ-M15W14-PR-A20-000115

REV. NO.	DATE	DESCRIPTION	BY	CHK	APP'D
1	25.03.31	REVISED AS MARKED	황래종	안남후	박동영
0	25.01.24	APPROVED FOR CONSTRUCTION	황래종	안남후	박동영

CONTRACTOR: SK ecoplant
COMMODITY: D
LINE NO.: 150A-D-ST1-N-9515
PROJECT NAME: M15X Ph4 Project
JOB NO.: 22330D
SH'T NO.: 01 / 01
REV.: 1

경고 : 본 도면은 SK HYNIX의 기업비밀 자료로서, 어떠한 경우에도 목적 외 사용, 복제, 제3자에게 공개, 누설 및 유출할 수 없으며, 회사는 유포자의 불법 사용으로 피해가 발생할 경우 유포자에게 민/형사상 책임을 요구할 수 있음.

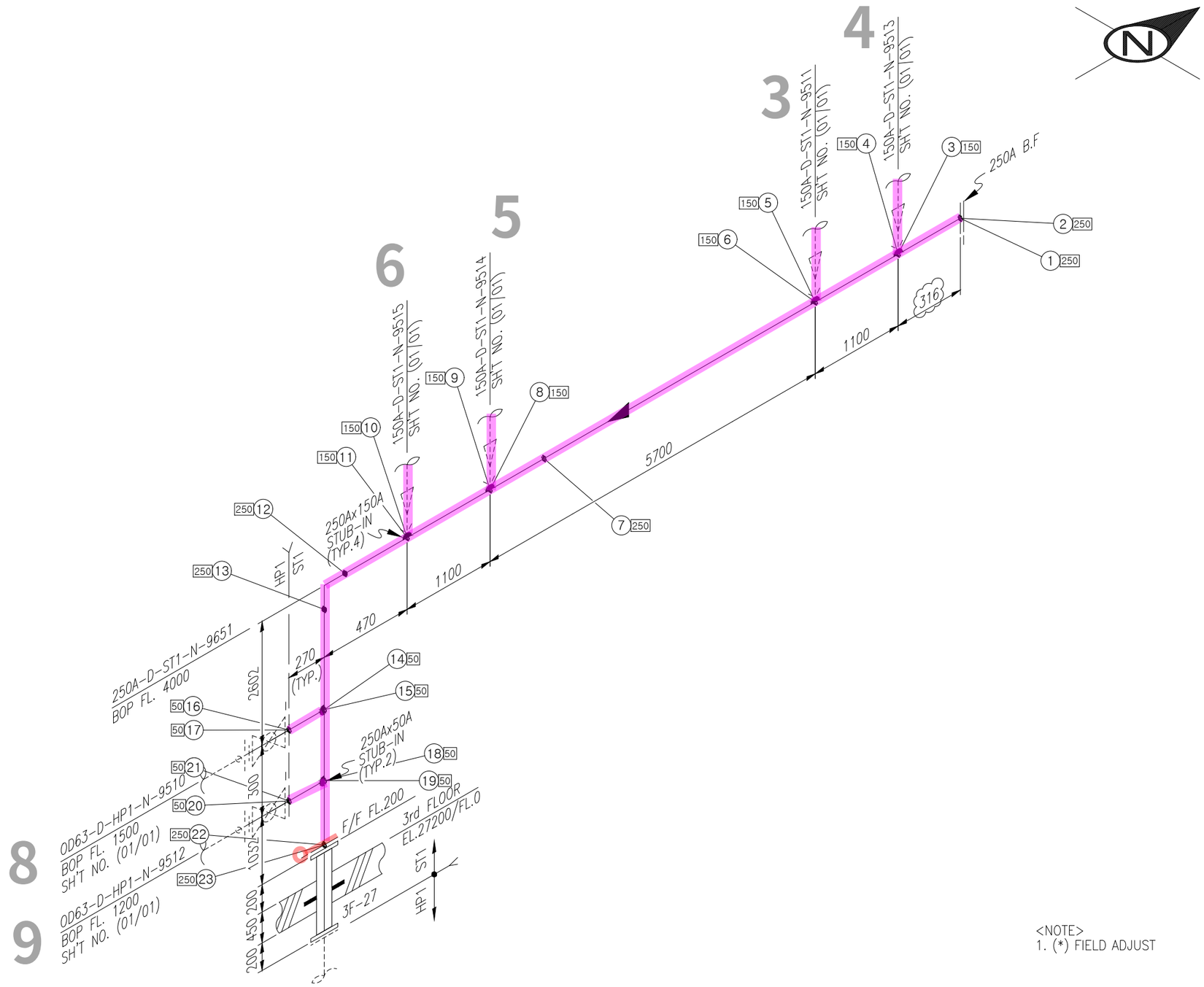

<NOTE>
1. (*) FIELD ADJUST

SK ecoplant

ITEM	SIZE	Q'TY	DESCRIPTION
		ST1	
P	250A	12.1M	PIPE, STS 304TP, ERW, BE – SCH 10S
E90	250A	1EA	ELBOW 90 DEG LR, STS304, ERW, BE – SCH 10S
F	250A	1EA	FLG SO, KS 10K, RF, STS304
F1	250A	1EA	FLG SO, KS 10K, FF, STS304
G	250A	1EA	GASKET, KS 10K, RF, PTFE+EPDM, 3.0MM TH'K
G1	250A	1EA	GASKET, KS 10K, FF, PTFE+EPDM, 3.0MM TH'K
B	250A	2SET	MACHINE BOLT & NUTS :STS 304 / W WASHERS
FB	250A	1EA	FLG BLIND, KS 10K, RF, STS304
STU	250Ax150A	2EA	STUB-IN BRANCH
STU	250Ax50A	2EA	STUB-IN BRANCH
P	50A	0.3M	PIPE, STS 304TP, ERW, BE – SCH 10S
F	50A	2EA	FLG SO, KS 10K, RF, STS304

* PIPE : P/P1 * 90° ELBOW : E90 * 45° ELBOW : E45 * TEE : T * RED.TEE : TR * STUB-IN : STU * REINFORCING PAD : RP * CON.RED : RC * ECC.RED : RE * CON.SWAGE : RCS/RCS1 * ECC.SWAGE : RES/RES1 * NIPPLE : NP/NP1/NP2 * CAP : CAP/CAP1 * PLUG : PLG * FULL COUPLING : FC * HALF COUPLING : HF/HF1
* STUB-IN : STU * SOCKET(HDPE/PVC) : SC * SADDLE(HDPE) : SD * FLANGE : F/F1 * GASKET : G/G1/G2 * BOLT & NUT : B/B1 * BLIND FLANGE : FB/FB1 * GATE VA. : VG/VC1/VG2 * BALL VA. : VB/VBL0/VB1/VB1L0/VB2/VB2L0 * BUTTERFLY VA. : VF/VF4 * CHECK VA. : VC/VC1/VC2/VC3/VC4/VC5/VC6/VC7
* GLOBE VA. : VL/VL1/VL2 * DIAPHRAGM VA. : VD/VDL0 * DAMPER : VP * QUICK COUPLING : SQC * FLEXIBLE JOINT(STEEL) : FLXB * FLEXIBLE JOINT(RUBBER) : FLXR * FLEXIBLE JOINT(STEEL_PTFE LINED) : FLXL * FLEXIBLE HOSE : FLXH * STEAM TRAP : ST * SPRAY NOZZLE : SPN * EMERGENCY SHOWER : SSH
* STRAINER(Y-TYPE) : YSTR * STRAINER(T-TYPE) : TSTR * STRAINER(BUCKET-TYPE) : BSTR * ANCHOR PLATE : STOP * BIRD SCREEN : BS * ISOLATION KIT : IK * UNLOADING BOX : UB * AIR TRAP : AT * LOTO : LOTO * SIGHT GLASS : SG * PRESSURE GAUGE : PG * SHILED : SH * SPECIAL BOLT & NUT : BL/BL1

CLIENT SK hynix 7

INSULATION	CODE	N	CONDITION	PRESS. (kg/cm2g)	TEMP. (°C)
	THICK.	–	DESIGN	1.0	60
			OPERATING	ATM	AMB

AREA W14
UNIT 3FA
REF. PLAN DWG. CJ-M15W14-PI-A30-030002-B
REF. P & ID CJ-M15W13-PR-A20-000084

REV. NO.	DATE	DESCRIPTION	BY	CHK	APP'D
1	25.03.31	REVISED AS MARKED	황래종	안남후	박동영
0	25.01.24	APPROVED FOR CONSTRUCTION	황래종	안남후	박동영

CONTRACTOR SK ecoplant
PROJECT NAME M15X Ph4 Project
COMMODITY D
JOB NO. 22330D
LINE NO. 250A-D-ST1-N-9651
SH'T NO. 01 / 01
REV. 1

경고 : 본 도면은 SK HYNIX의 기업비밀 자료로서, 어떠한 경우에도 목적 외 사용, 복제, 제3자에게 공개, 누설 및 유출할 수 없으며, 회사는 유포자의 불법 사용으로 피해가 발생할 경우 유포자에게 민/형사상 책임을 요구할 수 있음.

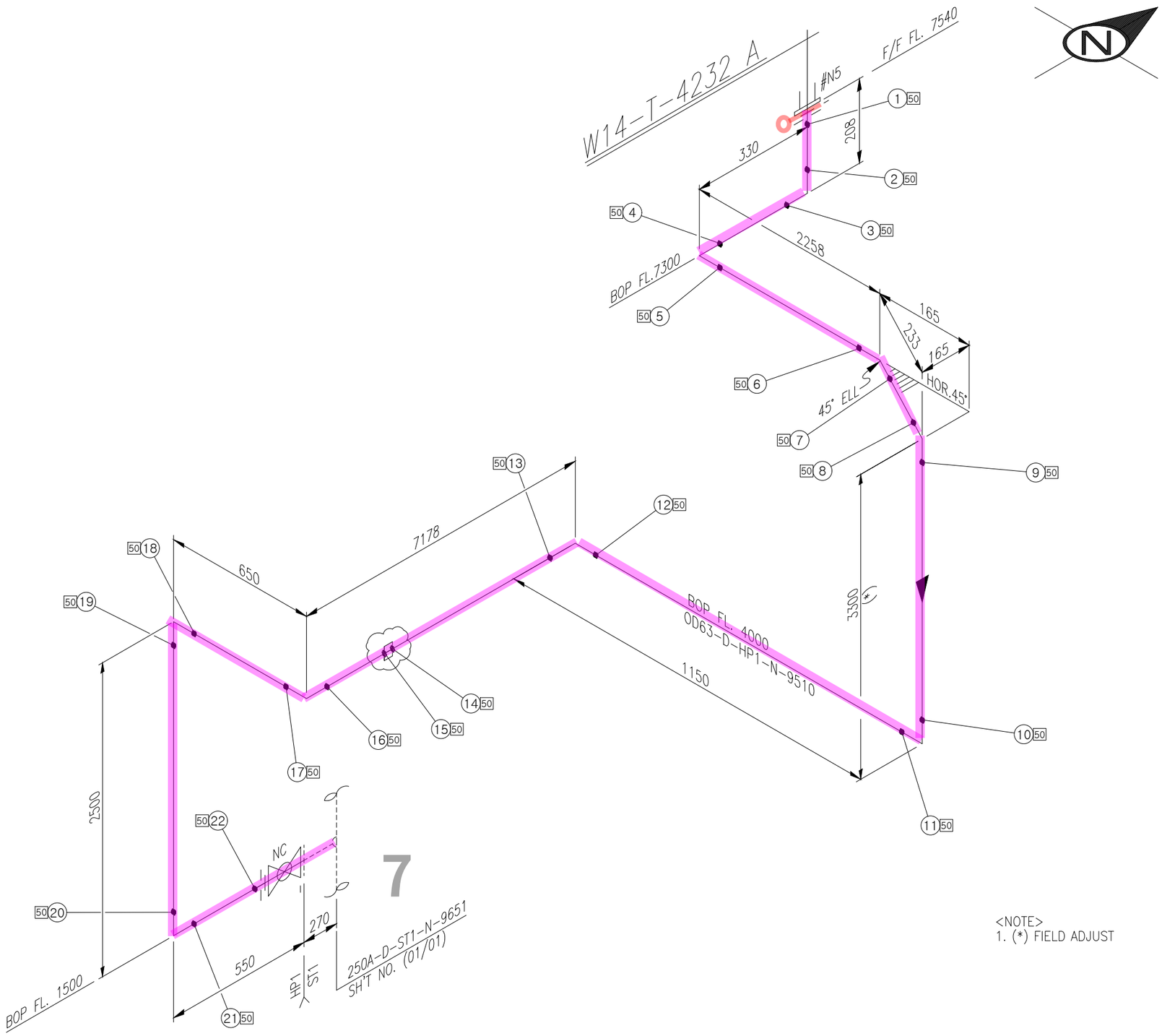

<NOTE>
1. (*) FIELD ADJUST

SK ecoplant

ITEM	SIZE	Q'TY	DESCRIPTION
		HP1	
P	OD63	18.0M	PIPE, HDPE PE100, PE, SOCKET FUSION, PN16/SDR11
E90	OD63	8EA	ELBOW 90 DEG, HDPE PE100, PE, SOCKET FUSION,
E45	OD63	1EA	ELBOW 45 DEG, HDPE PE100, PE, SOCKET FUSION,
F	OD63	2EA	FLG LAP JOINT / STUB END SET, KS 10K, FF,
			LAP JOINT-STS304 / STUB END-HDPE PE100
G	OD63	3EA	GASKET, KS 10K, FF, PTFE+EPDM, 3.0MM TH'K
B	OD63	3SET	MACHINE BOLT & NUTS :STS 304 / W WASHERS
VB	OD63	1EA	BALL VALVE, KS 10K, FF FLG'D, BODY-PP /
			TRIM-PP / SEAT-PTFE, FB, LEVER
LOTO	OD63	1EA	LOTO
SC	OD63	1EA	SOCKET, HDPE PE100, SOCKET FUSION, PN16/SDR11

* PIPE : P/P1 * 90° ELBOW : E90 * 45° ELBOW : E45 * TEE : T * RED.TEE : TR * STUB-IN : STU * REINFORCING PAD : RP * CON.RED : RC * ECC.RED : RE * CON.SWAGE : RCS/RCS1 * ECC.SWAGE : RES/RES1 * NIPPLE : NP/NP1/NP2 * CAP : CAP/CAP1 * PLUG : PLG * FULL COUPLING : FC * HALF COUPLING : HF/HF1
* STUB-IN : STU * SOCKET(HDPE/PVC) : SC * SADDLE(HDPE) : SD * FLANGE : F/F1 * GASKET : G/G1/G2 * BOLT & NUT : B/B1 * BLIND FLANGE : FB/FB1 * GATE VA. : VG/VG1/VG2 * BALL VA. : VB/VBLO/VB1/VB1LO/VB2/VB2LO * BUTTERFLY VA. : VF/VF4 * CHECK VA. : VC/VC1/VC2/VC3/VC4/VC5/VC6/VC7
* GLOBE VA. : VL/VL1/VL2 * DIAPHRAGM VA. : VD/VDLO * DAMPER : VP * QUICK COUPLING : SQC * FLEXIBLE JOINT(STEEL) : FLXB * FLEXIBLE JOINT(RUBBER) : FLXR * FLEXIBLE JOINT(STEEL_PTFE LINED) : FLXL * FLEXIBLE HOSE : FLXH * STEAM TRAP : ST * SPRAY NOZZLE : SPN * EMERGENCY SHOWER : SSH
* STRAINER(Y-TYPE) : YSTR * STRAINER(T-TYPE) : TSTR * STRAINER(BUCKET-TYPE) : BSTR * ANCHOR PLATE : STOP * BIRD SCREEN : BS * ISOLATION KIT : IK * UNLOADING BOX : UB * AIR TRAP : AT * LOTO : LOTO * SIGHT GLASS : SG * PRESSURE GAUGE : PG * SHILED : SH * SPECIAL BOLT & NUT : BL/BL1

CLIENT: SK hynix

8

INSULATION	CODE	N	CONDITION	PRESS. (kg/cm2g)	TEMP. (°C)
	THICK.	–	DESIGN	1.0	60
			OPERATING	ATM	AMB

AREA W14
UNIT 3FA
REF. PLAN DWG. CJ-M15W14-PI-A30-030002-E
REF. P & ID CJ-M15W14-PR-A20-000113

REV. NO.	DATE	DESCRIPTION	BY	CHK	APP'D
0	25.03.31	APPROVED FOR CONSTRUCTION	황래종	안남후	박동영

CONTRACTOR: SK ecoplant
PROJECT NAME: M15X Ph4 Project
COMMODITY: D
JOB NO.: 22330D
LINE NO.: OD63-D-HP1-N-9510
SH'T NO.: 01 / 01
REV.: 0

경고 : 본 도면은 SK HYNIX의 기업비밀 자료로서, 어떠한 경우에도 목적 외 사용, 복제, 제3자에게 공개, 누설 및 유출할 수 없으며, 회사는 유포자의 불법 사용으로 피해가 발생할 경우 유포자에게 민/형사상 책임을 요구할 수 있음.

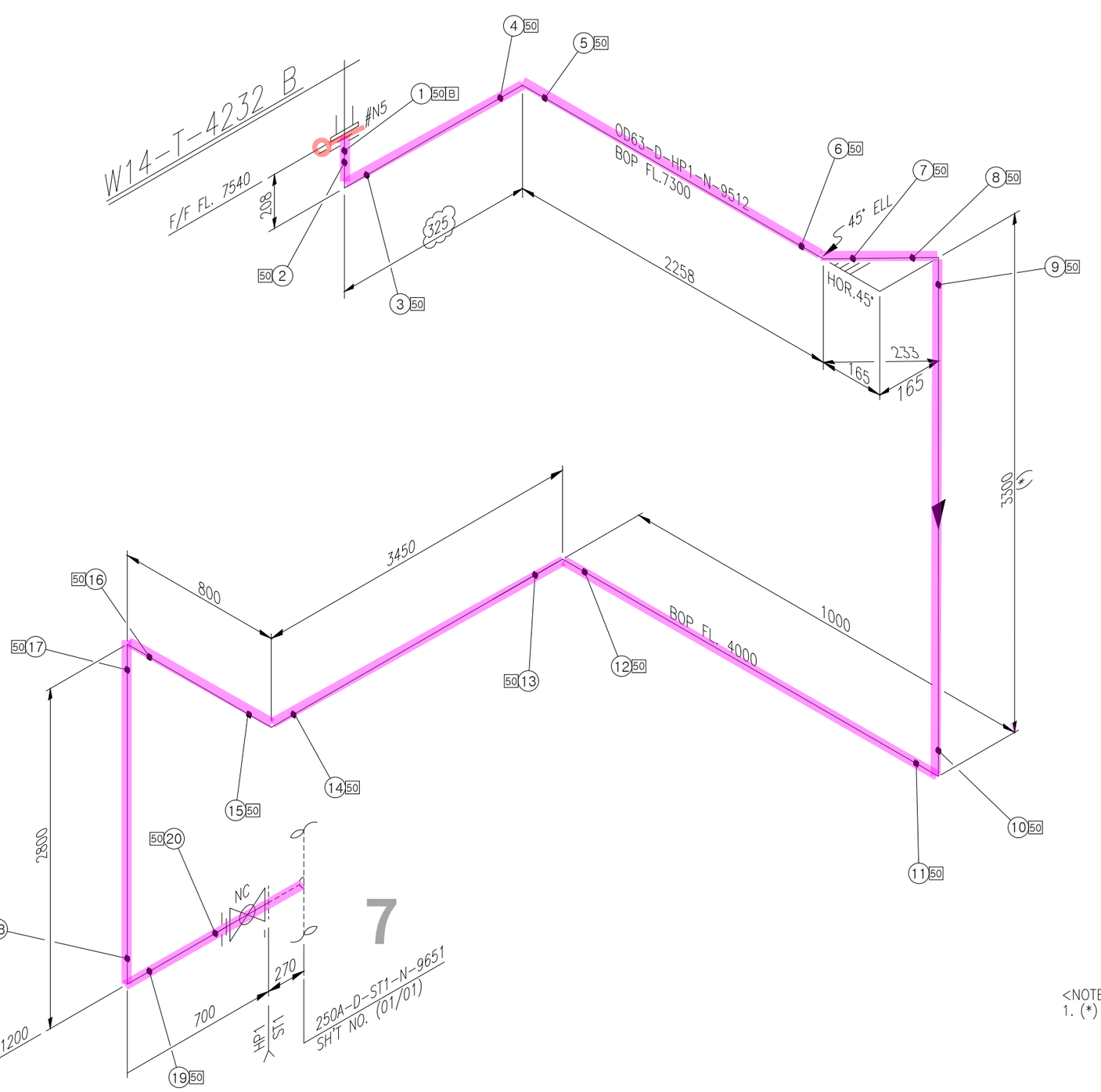

<NOTE>
1. (*) FIELD ADJUST

ITEM	SIZE	Q'TY	DESCRIPTION
		HP1	
P	OD63	14.8M	PIPE, HDPE PE100, PE, SOCKET FUSION, PN16/SDR11
E90	OD63	8EA	ELBOW 90 DEG, HDPE PE100, PE, SOCKET FUSION,
E45	OD63	1EA	ELBOW 45 DEG, HDPE PE100, PE, SOCKET FUSION,
F	OD63	2EA	FLG LAP JOINT / STUB END SET, KS 10K, FF,
			LAP JOINT-STS304 / STUB END-HDPE PE100
G	OD63	3EA	GASKET, KS 10K, FF, PTFE+EPDM, 3.0MM TH'K
B	OD63	3SET	MACHINE BOLT & NUTS :STS 304 / W WASHERS
VB	OD63	1EA	BALL VALVE, KS 10K, FF FLG'D, BODY-PP /
			TRIM-PP / SEAT-PTFE, FB, LEVER
LOTO	OD63	1EA	LOTO

* PIPE : P/P1 * 90° ELBOW : E90 * 45° ELBOW : E45 * TEE : T * RED.TEE : TR * STUB-IN : STU * REINFORCING PAD : RP * CON.RED : RC * ECC.RED : RE * CON.SWAGE : RCS/RCS1 * ECC.SWAGE : RES/RES1 * NIPPLE : NP/NP1/NP2 * CAP : CAP/CAP1 * PLUG : PLG * FULL COUPLING : FC * HALF COUPLING : HF/HF1
* STUB-IN : STU * SOCKET(HDPE/PVC) : SC * SADDLE(HDPE) : SD * FLANGE : F/F1 * GASKET : G/G1/G2 * BOLT & NUT : B/B1 * BLIND FLANGE : FB/FB1 * GATE VA. : VG/VG1/VG2 * BALL VA. : VB/VBLO/VB1/VB1LO/VB2/VB2LO * BUTTERFLY VA. : VF/VF4 * CHECK VA. : VC/VC1/VC2/VC3/VC4/VC5/VC6/VC7
* GLOBE VA. : VL/VL1/VL2 * DIAPHRAGM VA. : VD/VDLO * DAMPER : VP * QUICK COUPLING : SQC * FLEXIBLE JOINT(STEEL) : FLXB * FLEXIBLE JOINT(RUBBER) : FLXR * FLEXIBLE JOINT(STEEL_PTFE LINED) : FLXL * FLEXIBLE HOSE : FLXH * STEAM TRAP : ST * SPRAY NOZZLE : SPN * EMERGENCY SHOWER : SSH
* STRAINER(Y-TYPE) : YSTR * STRAINER(T-TYPE) : TSTR * STRAINER(BUCKET-TYPE) : BSTR * ANCHOR PLATE : STOP * BIRD SCREEN : BS * ISOLATION KIT : IK * UNLOADING BOX : UB * AIR TRAP : AT * LOTO : LOTO * SIGHT GLASS : SG * PRESSURE GAUGE : PG * SHILED : SH * SPECIAL BOLT & NUT : BL/BL1

CLIENT SK hynix 9

INSULATION	CODE	N	CONDITION	PRESS. (kg/cm2g)	TEMP. (°C)
	THICK.	–	DESIGN	1.0	60
			OPERATING	ATM	AMB

AREA W14
UNIT 3FA
REF. PLAN DWG. CJ-M15W14-PI-A30-030002-E
REF. P & ID CJ-M15W14-PR-A20-000115

REV. NO.	DATE	DESCRIPTION	BY	CHK	APP'D
0	25.03.31	APPROVED FOR CONSTRUCTION	황래종	안남후	박동영

CONTRACTOR SK ecoplant
PROJECT NAME M15X Ph4 Project
COMMODITY D
JOB NO. 22330D
LINE NO. 0D63-D-HP1-N-9512
SH'T NO. 01 / 01
REV. 0

경고 : 본 도면은 SK HYNIX의 기업비밀 자료로서, 어떠한 경우에도 목적 외 사용, 복제, 제3자에게 공개, 누설 및 유출할 수 없으며, 회사는 유포자의 불법 사용으로 피해가 발생할 경우 유포자에게 민/형사상 책임을 요구할 수 있음.